REGULAR CITY COUNCIL MEETING
WEDNESDAY, JANUARY 22 , 2020

Regular Meeting - 6:00 PM

City Hall – Beryl P. Robinson, Jr. Conference Room
317 Broad Street, Nevada City, CA 95959

MISSION STATEMENT
The City of Nevada City is dedicated to preserving and enhancing its small town character and historical architecture while providing quality public services for our current and future residents, businesses and visitors.

Reinette Senum, Mayor
Duane Strawser, Council Member **Erin Minett, Vice Mayor**
David Parker, Council Member **Valerie Moberg, Council Member**

The City Council welcomes you to its meetings which are scheduled at 6:30 PM on the 2nd and 4th Wednesdays of each month. Your interest is encouraged and appreciated. This meeting is recorded on DVD and is televised on local public television Channel 17. Other special accommodations may be requested to the City Clerk 72 hours in advance of the meeting. Please turn off all cell phones or similar devices. Action may be taken on any agenda item. Agenda notices are available at City Hall. Materials related to an item on this Agenda submitted to the Council after distribution of the agenda packet are available for public inspection in the City Hall at 317 Broad Street, Nevada City, CA during normal business hours.

ANY MEMBER OF THE PUBLIC DESIRING TO ADDRESS THE COUNCIL ON ANY ITEM ON THIS AGENDA: After receiving recognition from the Mayor, give your name and address, and then your comments or questions. Please direct your remarks to the Councilmembers. In order that all interested parties have an opportunity to speak, please limit your comments to the specific item under discussion. All citizens will be afforded an opportunity to speak, consistent with their Constitutional rights. Time limits shall be at the Mayor's discretion. **IF YOU CHALLENGE** the Council's decision on any matter in court, you will be limited to raising only those issues you or someone else raised at the meeting or Public Hearing described on this agenda, or in written correspondence delivered to the City Council at, or prior to, the meeting or Public Hearing.

CLOSED SESSION: None

Under Government Code Section 54950 members of the public are entitled to comment on the closed session agenda before the Council goes into closed session.

1. Pursuant to Government Code Section 54957 a closed session is requested with City Manager, Catrina Olson, to discuss a personnel matter relating to the appointment of the contract City Attorney.

REGULAR MEETING – 6:30 PM - Call to Order

Roll Call: Mayor Senum, Vice Mayor Minett, Council Members Moberg, Parker and Strawser

PLEDGE OF ALLEGIANCE

PROCLAMATIONS: "Celebrating 50 Years in Business"

PRESENTATIONS:

BUSINESS FROM THE FLOOR

1. **PUBLIC COMMENT**
   Under Government Code Section 54954.3, members of the public are entitled to address the City Council concerning any item within the Nevada City Council's subject matter jurisdiction. Comments on items NOT ON THE AGENDA are welcome at this time. Normally, public comments are limited to no more than three minutes each. **Except for certain specific exceptions, the City Council is prohibited from discussing or taking action on any item not appearing on the posted agenda.**

2. **COUNCIL MEMBERS REQUESTED ITEMS AND COMMITTEE REPORTS:**

3. **CONSENT ITEMS:**
   All matters listed under the Consent Calendar are to be considered routine by the City Council and will be enacted by one motion in the form listed. There will be no separate discussion of these items unless, before the City Council votes on the motion to adopt, members of the Council, City staff or the public request specific items to be removed from the Consent Calendar for separate discussion and action.

   A. **Subject:** Fire Activity Report – December 2019
   Recommendation: Receive and file.

   B. **Subject:** Side Letter No. 2 to The Nevada City Police Supervisor's Association Memorandum of Understanding (MOU) dated July 1, 2018 through June 30, 2021 – Rescinding and Replacing the Section HOLIDAYS Policy
   Recommendation: Review and approve Side Letter No. 2 to The Nevada City Police Supervisor's Association Memorandum of Understanding (MOU) dated July 1, 2018 through June 30, 2021 – rescinding and replacing the Section HOLIDAYS Policy.

   C. **Subject:** Agreement Between City of Nevada City, Sierra Academy of Expeditionary Learning and Bear Yuba Land Trust for Educational Activities at Hirschman Trail and Property
   Recommendation: Authorize the City Manager to sign the agreement.

   D. **Subject:** Second Reading - Ordinance for the Regulation of Accessory Dwelling Units (updated to reflect Ordinance 2020-01)
   Recommendation: Adopt Ordinance 2020-XX; An Ordinance adopting amendments to Section 17.72.020 through Section 17.72.038 of the City Municipal Code in order to update the City's Ordinance pertaining to Accessory Dwelling Units in compliance with adopted State legislation.

E. **Subject:** Letter Addressing Critical Matters Related to the PG&E Bankruptcy
Recommendation: Review the draft letter, approve content and authorize the Mayor to sign.

F. **Subject:** Award of Contract for Water Improvements on Boulder Street
Recommendation: Pass Resolution 2020-XX, a Resolution of the City Council of the City of Nevada City to award a contract to PSCE in the amount of $82,605 plus $8,000 in contingencies for Water Improvements on Boulder Street in Nevada City and authorize the Mayor to sign.

G. **Subject:** Nevada Street Bridge Utility Agreements for Water and Sewer
Recommendation: Approve Utility Agreements for relocation or adjustment of water and sewer facilities for the Nevada Street Bridge replacement project and authorize the Mayor to sign on behalf of the City.

H. **Subject:** Action Minutes January 8, 2020 City Council Meeting
Recommendation: Review and approve City Council Meeting action minutes of January 8, 2020.

4. DEPARTMENT REQUESTED ACTION ITEMS AND UPDATE REPORTS:

A. **Subject:** California Resilience Program, Request for Proposals, 2020 Grant Program
Recommendation: The City Council to review the attached California Resilience 2020 Grant Program and determine if the City of Nevada City desires to submit a request for proposal and authorize the Sierra Fund to write the grant

B. **Subject:** A Resolution of the City Council of the City of Nevada City Adopting the First Amendment to the Professional Services Agreement for Legal Services (Jones and Mayer) Appointing Crystal Hodgson as the Contract City Attorney for Nevada City
Recommendation: Pass Resolution 2020-XX, a Resolution of the City Council of the Nevada City adopting the first amendment to the Professional Services Agreement for Legal Services (Jones and Mayer) appointing Crystal Hodgson as the contract City Attorney for Nevada City.

C. **Subject:** Funding Opportunities for Undergrounding Overhead Utilities
Recommendation: Provide staff direction to request Rule 20A funds from Nevada County to augment the City's allocation of Rule 20A work credits for conversion of overhead electric distribution lines and facilities to underground.

D. **Subject:** Bollard Options for the City's Historic District
Recommendation: Provide the Police Department with direction to move forward with looking into different funding options and equipment options for installing bollards in the Historic District of the City.

E. **Subject:** Draft Request for Proposals (RFP) for Solar Photovoltaic Projects, including a Potential Project at the Old Airport property
Recommendation: Review the draft RFP, make modifications if necessary and approve for distribution to qualified solar photovoltaic system developers.

5. PUBLIC HEARINGS:

6. OLD BUSINESS:

7. NEW BUSINESS:

A. **Subject:** Schematic of Parking Structure at Spring Street Parking Lot
Recommendation: Provide staff direction to proceed with design of a Parking Structure at Spring Street parking lot.

B. **Subject:** Collaborative Homelessness Program with the Hospitality House and Behavioral Health
Recommendation: Provide the Police Department with the support and approval to continue the partnership with the Hospitality House, Behavioral Health and Turning Point in finding ways that are more effective in dealing with the homelessness and mental health epidemic in our region.

C. **Subject:** An Ordinance of the City of Nevada City Amending Title 15 of the Nevada City Municipal Code to Adopt the 2019 California Building Standards with Local Amendments
Recommendation: Approve finding that CEQA exemptions apply as described herein, finding this action reflects the independent judgment of the City Council of Nevada City; approve for introduction and first reading of Ordinance by title only, waiving further reading of the entire Ordinance.

D. **Subject:** Funding Plan for Nevada City's Identified Technological Hardware and Software Needs
Recommendation: Seeking Council approval of Nevada City's Funding Plan for Nevada City's identified technological hardware and software needs.

8. CORRESPONDENCE:

A. **Subject:** Sierra Nevada Memorial Thank You for Pink Patch Project

9. ANNOUNCEMENTS:

10. CITY MANAGER'S REPORT:

11. ADJOURNMENT

Certification of Posting of Agenda
I, Loree' McCay, Administrative Services Manager/Deputy City Clerk for the City of Nevada City, declare that the foregoing agenda for the January 22nd , 2020 Regular Meeting of the Nevada City City Council was posted January 17th, 2020 at the entrance of City Hall. The agenda is also posted on the City's website www.nevadacityca.gov.

Signed January 17th, 2020, at Nevada City, California

_____
Loree' McCay, Administrative Services Manager/Deputy City Clerk

---

CITY OF NEVADA CITY
City Council
Long Range Calendar

January 22, 2020	Regular Council Meeting
February 10, 2020	Strategic Planning
February 12, 2020	Regular Council Meeting
February 17, 2020	Holiday
February 26, 2020	Regular Council Meeting
March 11,2020	Regular Council Meeting
March 25, 2020	Regular Council Meeting
March 31, 2020	Holiday
April 8, 2020	Regular Council Meeting
April 22, 2020	Regular Council Meeting

NOTE: This list is for planning purposes; items may shift depending on timing and capacity of a meeting.

NOTICE: *As presiding officer, the Mayor has the authority to preserve order at all City Council meetings, to remove or cause the removal of any person from any such meeting for disorderly conduct, or for making personal, impertinent, or slanderous remarks, using profanity, or becoming boisterous, threatening or personally abusive while addressing said Council and to enforce the rules of the Council.*

REPORT TO CITY COUNCIL

City of Nevada City
317 Broad Street
Nevada City, CA 95959
www.nevadacityca.gov

January 22, 2020

TITLE: Fire Activity Report – December 2019

RECOMMENDATION: Receive and file.

CONTACT: Sam Goodspeed, Division Chief SG

BACKGROUND / DISCUSSION: The attached Fire Activity Report reviews the monthly responses including incident type, location and participation for Nevada City Fire Station 54.

ENVIRONMENTAL CONSIDERATIONS: Not applicable.

FISCAL IMPACT: Not applicable.

ATTACHMENTS:

- ✓ Station 54 Incident Responses
- ✓ Nevada City Incident Responses
- ✓ Station 54 Incident Type Summary
- ✓ Year to Date Incident Participation

Station 54 Incident Responses

Alarm Date Between {12/01/2019} And {12/31/2019}

Alm Date	Alm Time	Location	Incident Type
12/01/2019	06:42:00	775 Old Tunnel RD /314/Gr	320 Emergency medical service, o
12/01/2019	08:11:00	13550 Loma Rica DR /Grass	611 Dispatched & cancelled en ro
12/01/2019	14:11:00	13074 Heigen CT /Grass Va	600 Good intent call, Other
12/01/2019	16:20:00	350 Clay ST /Nevada City,	320 Emergency medical service, o
12/01/2019	22:14:00	775 Old Tunnel RD /201/Gr	553 Public service
12/02/2019	07:08:00	Clay ST & Turpentine DR /	600 Good intent call, Other
12/03/2019	08:33:00	10946 Ridge RD /Nevada Ci	320 Emergency medical service, o
12/03/2019	11:03:00	821 Zion ST /B5/Nevada Ci	320 Emergency medical service, o
12/03/2019	13:41:00	11761 Ridge RD /Grass Val	300 Rescue, EMS incident, other
12/03/2019	15:57:00	321 Dorsey /Grass Valley,	700 False alarm or false call, O
12/03/2019	20:28:00	444 Brock RD /Nevada City	554 Assist invalid
12/04/2019	05:17:00	State Highway 49 HWY & Sh	324 Motor Vehicle Accident with
12/04/2019	11:56:00	Loma Rica DR & Grass Vall	463 Vehicle accident, general cl
12/04/2019	13:12:00	1003 Granholm WAY /Nevada	320 Emergency medical service, o
12/04/2019	16:26:00	407 Gracie RD /Nevada Cit	550 Public service assistance, O
12/04/2019	16:57:00	625 Eskaton CIR /Grass Va	744 Detector activation, no fire
12/05/2019	14:08:00	10754 Eagle Cir. /Nevada	554 Assist invalid
12/05/2019	14:58:00	201 CHURCH ST /Nevada Cit	320 Emergency medical service, o
12/05/2019	17:12:00	10754 Eagle CT /Nevada Ci	554 Assist invalid
12/06/2019	08:48:00	223 Bridge Street /Nevada	320 Emergency medical service, o
12/06/2019	18:16:00	155 Glasson WAY /Grass Va	131 Passenger vehicle fire
12/06/2019	19:38:00	334 Bridge WAY /Nevada Ci	622 No Incident found on arrival
12/06/2019	23:10:00	1145 Sutton WAY /Grass Va	300 Rescue, EMS incident, other
12/07/2019	14:00:00	347 Nile ST /12/Nevada Ci	320 Emergency medical service, o
12/07/2019	20:02:00	624 Gold Flat RD /Nevada	322 Motor vehicle accident with
12/08/2019	03:48:00	418 Commercial ST /Nevada	554 Assist invalid
12/08/2019	09:12:00	821 Zion ST /A8/Nevada Ci	700 False alarm or false call, O
12/08/2019	13:09:00	304 Sutton WY /Grass Vall	741 Sprinkler activation, no fir
12/10/2019	13:52:00	Brunswick RD & Idaho Mary	324 Motor Vehicle Accident with
12/11/2019	11:52:00	805 LINDLEY AVE /Nevada C	743 Smoke detector activation, n
12/11/2019	19:57:00	692 Morgan Ranch DR /Gras	550 Public service assistance, O
12/12/2019	15:46:00	107 Margaret LN /Grass Va	320 Emergency medical service, o
12/12/2019	16:15:00	775 Old Tunnel RD /313/Gr	320 Emergency medical service, o
12/12/2019	20:35:00	129 W McKnight WAY /Grass	160 Special outside fire, Other
12/12/2019	21:00:00	360 Sutton WAY /16/Grass	743 Smoke detector activation, n
12/12/2019	21:55:00	775 Old Tunnel RD /313/Gr	320 Emergency medical service, o
12/13/2019	09:53:00	15496 Lake Vera Purdon RD	400 Hazardous condition, Other
12/13/2019	14:37:00	14912 Craig LANE /Grass V	320 Emergency medical service, o
12/13/2019	15:37:00	201 Gold Flat CT /Nevada	735 Alarm system sounded due to
12/13/2019	19:52:00	11545 Polaris DR /Grass V	743 Smoke detector activation, n
12/15/2019	00:31:00	230 COMMERCIAL ST /Nevada	320 Emergency medical service, o
12/15/2019	15:22:00	State Highway 20 HWY & St	324 Motor Vehicle Accident with
12/16/2019	11:27:00	2 Wendy CIR /Grass Valley	321 EMS call, excluding vehicle
12/16/2019	12:03:00	150 Sutton WAY /Grass Val	611 Dispatched & cancelled en ro
12/16/2019	14:33:00	300 Sacramento ST /Nevada	320 Emergency medical service, o
12/16/2019	22:45:00	1449 Segsworth WAY /13/Gr	553 Public service
12/17/2019	10:00:00	11761 Ridge RD /Grass Val	320 Emergency medical service, o
12/17/2019	10:40:00	408 Brunswick RD /Safeway	320 Emergency medical service, o
12/17/2019	15:59:00	10754 Eagle CIR /Nevada C	554 Assist invalid

Station 54 Incident Responses

Alarm Date Between {12/01/2019} And {12/31/2019}

Alm Date	Alm Time	Location	Incident Type
12/17/2019	17:54:00	10754 Eagle CIR /nevada c	554 Assist invalid
12/17/2019	19:10:00	825 Old Tunnel RD /Lobby/	320 Emergency medical service, o
12/17/2019	22:06:00	State Highway 49 HWY /Nev	463 Vehicle accident, general cl
12/19/2019	12:05:00	360 Sutton WY /Grass Vall	320 Emergency medical service, o
12/19/2019	12:28:00	22255 State Highway 20 /N	424 Carbon monoxide incident
12/20/2019	06:53:00	570 SEARLS AVE /Nevada Ci	411 Gasoline or other flammable
12/20/2019	08:48:00	415 Sierra College DR /Gr	320 Emergency medical service, o
12/20/2019	09:49:00	355 Joerschke DR /Grass V	320 Emergency medical service, o
12/20/2019	11:34:00	844 Old Tunnel RD /Grass	320 Emergency medical service, o
12/21/2019	05:35:00	11920 Banner Lava Cap RD	324 Motor Vehicle Accident with
12/22/2019	08:06:00	350 Crown Point CIR /Dvit	320 Emergency medical service, o
12/22/2019	17:57:00	542 Jordan ST /Nevada Cit	100 Fire, Other
12/22/2019	23:42:00	13017 Boreham LANE /Nevad	320 Emergency medical service, o
12/23/2019	15:54:00	10754 Eagle CIR /Nevada C	320 Emergency medical service, o
12/24/2019	21:23:00	12217 Cascade WAY /Nevada	114 Chimney or flue fire, confin
12/24/2019	22:59:00	415 Sierra College DR /10	554 Assist invalid
12/25/2019	04:48:00	State Highway 20 HWY & Ba	551 Assist police or other gover
12/26/2019	14:20:00	859 Orchard Glen WAY /Gra	320 Emergency medical service, o
12/26/2019	18:03:00	401 Brock RD /Nevada City	320 Emergency medical service, o
12/27/2019	01:21:00	13521 Gracie RD /Nevada C	324 Motor Vehicle Accident with
12/27/2019	22:57:00	12351 Charles DR /Grass V	132 Road freight or transport ve
12/28/2019	10:03:00	316 Olympia Park CIR /Gra	320 Emergency medical service, o
12/28/2019	14:07:00	251 Willow Valley RD /10/	320 Emergency medical service, o
12/29/2019	07:52:00	203 Gold Flat CT /Nevada	745 Alarm system activation, no
12/29/2019	09:06:00	775 Old Tunnel RD /314/Gr	554 Assist invalid
12/29/2019	09:39:00	415 Sierra College DR /Gr	611 Dispatched & cancelled en ro
12/29/2019	11:32:00	Idaho Maryland RD & Bruns	463 Vehicle accident, general cl
12/29/2019	18:23:00	16858 Willow Valley RD /N	320 Emergency medical service, o
12/29/2019	19:16:00	867 Sutton WAY /Grass Val	320 Emergency medical service, o
12/30/2019	02:14:00	Dorsey DR & State Highway	463 Vehicle accident, general cl
12/30/2019	04:53:00	841 Old Tunnel RD /60 Uni	320 Emergency medical service, o
12/30/2019	08:45:00	359 Horizon CIR /Grass Va	320 Emergency medical service, o
12/30/2019	15:13:00	State Highway 49 HWY /Nea	320 Emergency medical service, o
12/30/2019	19:26:00	State Highway 20 HWY /Nea	320 Emergency medical service, o
12/31/2019	13:33:00	979 Gold Flat RD /Nevada	320 Emergency medical service, o

Total Incident Count 84

Nevada County Consolidated Fire District

Nevada City Incident List

Alarm Date Between {12/01/2019} And {12/31/2019}

Alm Date	Alm Time	Location	Incident Type
12/01/2019	16:20:00	350 Clay ST /Nevada City, CA	320 Emergency medical service, other
12/02/2019	07:08:00	Clay ST & Turpentine DR	600 Good intent call, Other
12/03/2019	11:03:00	821 Zion ST /B5/Nevada City,	320 Emergency medical service, other
12/03/2019	20:28:00	444 Brock RD /Nevada City, CA	554 Assist invalid
12/04/2019	13:12:00	1003 Granholm WAY /Nevada	320 Emergency medical service, other
12/04/2019	16:26:00	407 Gracie RD /Nevada City,	550 Public service assistance, Other
12/05/2019	14:58:00	201 CHURCH ST /Nevada City,	320 Emergency medical service, other
12/06/2019	08:48:00	223 Bridge Street /Nevada	320 Emergency medical service, other
12/06/2019	19:38:00	334 Bridge WAY /Nevada City,	622 No Incident found on arrival at
12/07/2019	14:00:00	347 Nile ST /12/Nevada City,	320 Emergency medical service, other
12/07/2019	20:02:00	624 Gold Flat RD /Nevada	322 Motor vehicle accident with
12/08/2019	03:46:00	111 Chief Kelly /Nevada City,	321 EMS call, excluding vehicle
12/08/2019	03:48:00	418 Commercial ST /Nevada	554 Assist invalid
12/08/2019	09:12:00	821 Zion ST /A8/Nevada City,	700 False alarm or false call, Other
12/10/2019	08:48:00	625 Spring ST /Nevada City,	444 Power line down
12/10/2019	16:03:00	925 MAIDU AVE /Nevada City,	320 Emergency medical service, other
12/11/2019	11:52:00	805 LINDLEY AVE /Nevada City,	743 Smoke detector activation, no
12/11/2019	12:54:00	549 E Broad ST /Nevada City,	320 Emergency medical service, other
12/12/2019	09:09:00	950 Maidu /Nevada City, CA	300 Rescue, EMS incident, other
12/12/2019	15:18:00	400 Railroad AVE /20/Nevada	300 Rescue, EMS incident, other
12/12/2019	22:31:00	230 Commercial Street /Nevada	320 Emergency medical service, other
12/13/2019	15:37:00	201 Gold Flat CT /Nevada	735 Alarm system sounded due to
12/13/2019	20:01:00	301 Sacramento Street /Nevada	320 Emergency medical service, other
12/15/2019	00:31:00	230 COMMERCIAL ST /Nevada	320 Emergency medical service, other
12/15/2019	02:53:00	418 Commercial ST /Nevada	553 Public service
12/15/2019	10:22:00	925 MAIDU AVE /Nevada City,	320 Emergency medical service, other
12/15/2019	15:22:00	State Highway 20 HWY & State	324 Motor Vehicle Accident with no
12/15/2019	17:27:00	York ST & Commercial ST	320 Emergency medical service, other
12/15/2019	23:45:00	575 E Broad ST /6/Nevada	611 Dispatched & cancelled en route
12/16/2019	14:33:00	300 Sacramento ST /Nevada	320 Emergency medical service, other
12/18/2019	09:04:00	112 Willow Valley Road	321 EMS call, excluding vehicle
12/18/2019	11:23:00	320 Bridge Way /Nevada City,	321 EMS call, excluding vehicle
12/20/2019	06:53:00	570 SEARLS AVE /Nevada City,	411 Gasoline or other flammable
12/21/2019	18:43:00	300 BROAD ST /A/Nevada City,	320 Emergency medical service, other
12/21/2019	22:24:00	305 COMMERCIAL ST /Nevada	320 Emergency medical service, other
12/22/2019	10:36:00	925 MAIDU AVE /Nevada City,	320 Emergency medical service, other
12/22/2019	16:06:00	330 Alexander ST /Nevada	554 Assist invalid
12/22/2019	17:57:00	542 Jordan ST /Nevada City,	100 Fire, Other
12/22/2019	22:35:00	728 Nevada ST /1/Nevada City,	320 Emergency medical service, other
12/24/2019	17:11:00	401 Brock Road /Nevada City,	321 EMS call, excluding vehicle
12/25/2019	04:48:00	State Highway 20 HWY & Banner	551 Assist police or other
12/26/2019	14:40:00	347 Nile ST /Nevada City, CA	320 Emergency medical service, other
12/26/2019	18:03:00	401 Brock RD /Nevada City, CA	320 Emergency medical service, other
12/26/2019	19:49:00	428 Uren ST /Nevada City, CA	320 Emergency medical service, other
12/27/2019	15:42:00	N Pine ST & Commercial ST	320 Emergency medical service, other

Nevada County Consolidated Fire District

Nevada City Incident List

Alarm Date Between {12/01/2019} And {12/31/2019}

Alm Date	Alm Time	Location	Incident Type
12/28/2019	00:53:00	235 COMMERCIAL ST /Nevada	320 Emergency medical service, other
12/28/2019	14:07:00	251 Willow Valley RD	320 Emergency medical service, other
12/29/2019	07:52:00	203 Gold Flat CT /Nevada	745 Alarm system activation, no fire
12/29/2019	12:45:00	251 Willow Valley RD	611 Dispatched & cancelled en route
12/29/2019	14:19:00	330 Alexander ST /Nevad City,	554 Assist invalid
12/31/2019	13:33:00	979 Gold Flat RD /Nevada	320 Emergency medical service, other

Total Incident Count 51

Nevada City Incident Type Summary

Alarm Date Between {12/01/2019} And {12/31/2019}

District	False	Fire	Good	Hazard	Overpressu	Rescue	Service	Special
01	0	1	0	0	0	1	0	0
02	4	1	2	2	0	12	3	0
1	0	0	0	0	0	1	0	0
54	0	0	2	2	0	13	7	0
84	0	0	0	2	0	4	0	0
86	0	2	0	0	0	2	0	0
87	0	0	0	0	0	1	0	0
91	1	0	0	0	0	0	0	0
NCCFD	0	0	0	1	0	0	0	0
NEV	4	1	2	1	0	10	3	0
	9	5	6	8	0	44	13	0

Nevada County Consolidated Fire District

NEV Year-to-date Incident Participation

Activity Date Between {07/01/2019} And {12/31/2019}

Staff Id/Name	Jan	Feb	Mar	Apr	May	Jun	Jul	Aug	Sep	Oct	Nov	Dec	Total	Percent
NEV-03 Cartzdafner, Kevin L	0	0	0	0	0	0	35	36	25	17	29	30	172	19.30
NEV-65 Chau, Michael	0	0	0	0	0	0	18	9	11	3	0	0	41	4.60
NEV-I023 Dambly, Trenton	0	0	0	0	0	0	28	31	22	32	24	14	151	16.94
NEV-019 Ellison, Connor	0	0	0	0	0	0	0	0	0	0	0	7	7	0.78
NEV-71 Ellison, Connor	0	0	0	0	0	0	0	1	8	41	39	37	126	14.14
NEV-72 Foster, Sean	0	0	0	0	0	0	0	0	10	52	56	41	159	17.84
NEV-09 Goodspeed, Samuel J	0	0	0	0	0	0	1	1	1	1	1	0	5	0.56
NEV-69 McDaniel, Jesse	0	0	0	0	0	0	40	25	17	7	0	0	89	9.98
NEV-70 Otani, Alex	0	0	0	0	0	0	28	29	15	0	0	0	72	8.08
NEV-15 Paulus, Daniel H	0	0	0	0	0	0	30	20	4	0	36	21	111	12.45
NEV-I024 Rodriguez, Ryan	0	0	0	0	0	0	22	37	48	36	18	20	181	20.31
NEV-I022 Rubinson, Jake	0	0	0	0	0	0	6	3	0	0	0	0	9	1.01
NEV-74 Stark, Blake	0	0	0	0	0	0	0	0	0	1	54	53	108	12.12
NEV-I025 Tomlinson, Rodney	0	0	0	0	0	0	13	26	20	23	35	14	131	14.70

Total Runs by Month

Jan	0	**Feb**	0	**Mar**	0	**Apr**	0	**May**	0	**Jun**	0
Jul	98	**Aug**	98	**Sep**	107	**Oct**	179	**Nov**	215	**Dec**	194

Grand Total Runs: 891

REPORT TO CITY COUNCIL

City of Nevada City
317 Broad Street
Nevada City, CA 95959
www.nevadacityca.gov

January 22, 2020

TITLE: Side Letter No. 2 to The Nevada City Police Supervisor's Association Memorandum of Understanding (MOU) dated July 1, 2018 through June 30, 2021 – Rescinding and Replacing the Section HOLIDAYS Policy

RECOMMENDATION: Review and approve Side Letter No. 2 to The Nevada City Police Supervisor's Association Memorandum of Understanding (MOU) dated July 1, 2018 through June 30, 2021 – rescinding and replacing the Section HOLIDAYS Policy.

CONTACT: Catrina Olson, City Manager

BACKGROUND / DISCUSSION:
The City of Nevada City and the Nevada City Police Supervisor's Association wish to revise the current Holiday Policy Section to allow for a payout of unused holiday time. Currently this MOU pertains to a single employee (Lieutenant) and the current policy does not take into consideration the salaried/exempt status and the "in lieu of taking holidays" verbiage was the exception and not the rule. The revision was made to allow for a payout of any unused Holiday pay in the event the employee was required to work a normally scheduled holiday. The holiday leave was also revised to include a policy for a payout upon separation of employment.

A side letter containing the revised policy was written and approved by the Police Department.

FISCAL IMPACT: There is no fiscal impact.

ATTACHMENTS:
- ✓ Side Letter No. 2 to The Nevada City Police supervisor's Association Memorandum of Understanding (MOU) dated July 1, 2018 through June 30, 2021

CITY OF NEVADA CITY
SIDE LETTER NO. 2 TO MEMORANDUM OF UNDERSTANDING

TO: Catrina Olson, City Manager

FROM: Paul Rohde –Lieutenant, Nevada City Police Department

SUBJECT: Amendment No. 2 to the Nevada City Police supervisor's Association dated July 1, 2018 through June 30th, 2021.

EFFECTIVE DATE: January 1, 2020

The Department and City have agreed to rescind and replace the ***Section HOLIDAYS:*** policy to read as follows*:*

Salaried/Exempt Employees shall be compensated for the 14 paid Holidays (112 hours) as follows:

Employee's Holiday leave credit of 112 hours shall be received on January 1st of each year.

Employees will record all used Holiday time off on time sheets during the year.

Employees may receive a lump sum payment of any unused Holiday leave. The payment of unused Holiday hours will occur on a regular payroll cycle on the last check date of December and will take into account the Christmas Holiday (8 hours).

Employees separated from employment prior to December 31st shall receive a payout of all unused hours minus the number of Holiday hours remaining in the Calendar year as shown below.

- New Year's Day – January 1st
- Martin Luther King, Jr. Day – Third Monday in January
- President's Day – Third Monday in February
- Cesar Chavez Day – March 31st
- Memorial Day – Last Monday in May
- Independence Day - July 4th
- Labor Day – First Monday in September
- Columbus Day – Second Monday in November
- Veteran's Day – November 11th
- Thanksgiving Day – 4th Thursday in November
- Day following Thanksgiving Day – 4th Friday in November
- Christmas – December 25th
- Two Floating holidays

Catrina Olson, City Manager	Date
Loree' McCay, Administrative Services Manager	Date
Paul Rohde, Lieutenant	Date

REPORT TO CITY COUNCIL

City of Nevada City
317 Broad Street
Nevada City, CA 95959
www.nevadacityca.gov

January 22, 2020

TITLE: Agreement Between City of Nevada City, Sierra Academy of Expeditionary Learning and Bear Yuba Land Trust for Educational Activities at Hirschman Trail and Property

RECOMMENDATION: Authorize the City Manager to sign the agreement.

CONTACT: Dawn Zydonis, Parks & Recreation Manager

BACKGROUND / DISCUSSION:
The Bear Yuba Land Trust (BYLT) and Sierra Academy of Expeditionary Learning (SAEL) would like to partner on an educational program for the students at SAEL. The City Council approved an identical Agreement with the parties for student use in 2019. The terms of the proposed Agreement are identical to the 2019 Agreement, and all parties were satisfied that the conditions of the Agreement and the program activities were followed and suitable for this City property.

The students will participate in the following activities:

1. Water quality monitoring. This may include mapping the waterways.
2. Scotch broom removal.
3. Western pond turtle surveys. This project may also include the construction of basking rafts.
4. Mammal surveys. This may include scat surveys, as well as, learning about where and how to place game cameras.
5. Trail maintenance related tasks. This will mostly be cutting back brush to open up the trail corridor, but may also include removing material that has sloughed off the back slope, opening up drainages and restoring the out slope.

This project is a benefit to all parties involved. The City trail will receive some maintenance that is always helpful in the long-term use of the trail and fire clearing. The neighbors and community have always expressed concerns about the wildlife in the area and the impact of the trail on wildlife. This could be a great educational tool not only for the students, but for the community as a whole.

All activities will be supervised by BYLT & SAEL employees. Trails will not be closed during educational activities, but may need to be closed for short periods during maintenance. Appropriate signage will be posted.

FISCAL IMPACT: None

ATTACHMENTS:
- ✓ Agreement Between City of Nevada City, Bear Yuba Land Trust and Sierra Academy of Expeditionary Learning for Educational Activities at Hirschman Trail and Property

AGREEMENT BETWEEN CITY OF NEVADA CITY, BEAR YUBA LAND TRUST AND SIERRA ACADEMY OF EXPEDITIONARY LEARNING FOR EDUCATIONAL ACTIVITIES AT HIRSCHMAN TRAIL AND PROPERTY

This Access Agreement is made as of this 22nd day of January, 2020 by and between the Sierra Academy of Expeditionary Learning, the Bear Yuba Land Trust (USERS) and the City of Nevada City (CITY).

RECITALS

A. WHEREAS, The CITY is the owner of certain property known as Hirschman's Pond in Nevada City, California with a trailhead located at 115 Cement Hill Rd. and,

B. WHEARAS, USERS desire to provide learning opportunities, including water quality monitoring, turtle surveys and trail maintenance at said location and,

C. WHEARAS, The CITY desires to provide USERS certain non-exclusive temporary access rights solely in connection with said activities.

NOW, THEREFORE, the parties agree as follows:

1. Subject to the terms and conditions of this Agreement, CITY grants to USERS non-exclusive temporary access rights to said property to provide learning opportunities.

2. The term of this Agreement shall commence on January 22, 2020 and shall end on June 6, 2020.

3. USERS shall waive and release, defend, indemnify and hold harmless City from and against any and all claims, demands, causes of action, costs, expenses, liability, loss, damage or injury, in law or equity, to property or persons, including wrongful death, in any manner which actually or allegedly arise out of or in connection with the performance of this Agreement, including but not limited to any alleged acts, omissions, negligence or willful misconduct of the CITY its officials, officers, employees, agents, and subcontractors arising out of or in connection with the performance of the Agreement, except where caused by the sole negligence or willful misconduct of the CITY. USERS shall defend, at USERS own cost, expense and risk, any and all such aforesaid suits, actions or other legal proceedings of every kind that may be brought or instituted against the CITY. USERS shall pay and satisfy any judgment, award or decree that may be rendered against any of the CITY in any such suit, action or other legal proceeding. USER shall reimburse the CITY for any and all legal expenses and costs incurred by each of them in connection therewith or in enforcing the indemnity herein provided. This Indemnity provision shall survive the termination of this Agreement.

4. Insurance Requirements

Workers Compensation & Employers Liability Insurance

a. Required if USERS have employees.
b. Workers Compensation insurance with statutory limits as required by the Labor Code of the State of California.
c. Employers Liability with limits of $1,000,000 per Accident; $1,000,000 Disease per employee; $1,000,000 Disease per policy.
d. Required Evidence of Coverage: Properly completed Certificate of Insurance.
e. The policy shall include a written waiver of the insurer's right to subrogate against CITY**.**

General Liability Insurance

f. Commercial General Liability Insurance no less broad than (Insurance Services Office (ISO) form CG 00 01.
g. Minimum Limits: 1,000,000 per Occurrence; 2,000,000 General Aggregate; 2,000,000 Products/Completed Operations Aggregate. The required limits may be provided by a combination of General Liability Insurance and Commercial Excess or Umbrella Liability Insurance. If USERS maintain higher limits than the specified minimum limits, CITY requires and shall be entitled to coverage for the higher limits maintained by USERS.
h. Any deductible or self-insured retention shall be shown on the Certificate of Insurance. If the deductible or self-insured retention exceeds $25,000 it must be approved in advance by CITY. USERS are responsible for any deductible or self-insured retention and shall fund it upon CITY's written request, regardless of whether USERS have a claim against the insurance or is named as a party in any action involving CITY.
i. CITY shall be endorsed as an additional insured for liability arising out of the USERS ongoing operations (ISO endorsement CG 20 26 or equivalent).
j. The insurance provided to CITY as an additional insured shall be primary

to, and non-contributory with any insurance or self-insurance program maintained by CITY.

k. The policy shall cover inter-insured suits and include a “separation of Insureds” or “severability” clause which treats each insured separately.

l. Required Evidence of Coverage:
    i. Copy of the additional insured endorsement or policy language granting additional insured status;
    ii. Copy of the endorsement or policy language indicating that coverage applicable to CITY is primary and non-contributory; and
    iii. Properly completed Certificate of Insurance.

City Hall
317 Broad St.
Nevada City, CA 95959

By: _____ Date: _____
City Manager, Catrina Olson

Bear Yuba Land Trust
PO Box 1004
Grass Valley, CA 95945

By: _____ Date: _____
Co-Executive Director, Erin Tarr

Sierra Academy of Expeditionary Learning
505 Main St.
Nevada City, CA 95959

By: _____ Date: _____
Principal, Erica Crane

REPORT TO CITY COUNCIL

City of Nevada City
317 Broad Street
Nevada City, CA 95959
www.nevadacityca.gov

January 22, 2020

TITLE: Second Reading - Ordinance for the Regulation of Accessory Dwelling Units (updated to reflect Ordinance 2020-01)

RECOMMENDATION: Adopt Ordinance 2020-XX; An Ordinance adopting amendments to Section 17.72.020 through Section 17.72.038 of the City Municipal Code in order to update the City's Ordinance pertaining to Accessory Dwelling Units in compliance with adopted State legislation.

CONTACT: Amy Wolfson, City Planner
Crystal Hodgson, City Attorney

BACKGROUND / DISCUSSION:
At the January 8, 2020 City Council meeting, staff reported on recently adopted State Legislation pertaining to Accessory Dwelling Units (ADUs). City Council introduced an Ordinance, as recommended by the Planning Commission, for a first reading to amend Section 17.72.020 through Section 17.72.038 in order to update the City's ADU Ordinance in compliance with adopted State legislation.

DRAFT ORDINANCE (Accessory Dwelling Unit Ordinance):
The amended Ordinance changes all references of "second dwelling units" to "accessory dwelling units" consistent with State terminology. The new ADU laws impose significant changes to the City's current Ordinance including size limitations, setback requirements, parking standards and fee waivers/reductions as reported at the January 8, 2020 staff report. At staff's recommendation, Council added language as recommended by City Attorney Hodgson relating to the enforcement of Owner-Occupancy restrictions after January 1, 2025. This change is reflected in the attached Ordinance language.

PLANNING COMMISSION RECOMMENDATION:
The Planning Commission reviewed the draft Ordinance at their December 19, 2019 regular meeting. Their recommendation included optional objective design standards along with some revisions of existing vague language with more precise language, which has been incorporated into the Ordinance as indicated with the January 8, 2020 staff report.

ENVIRONMENTAL CONSIDERATIONS:
In conjunction with the first reading of the Ordinance at the January 8, 2020 meeting, the City Council found that adoption of the Ordinance is exempt from CEQA pursuant to CEQA Guidelines Section 15282(h) and in Public Resources Code Section21080.17. The ordinance is also exempt from review under CEQA Guidelines Sections 15303 (new construction of small structures), 15305 (minor alterations to land), and 15061, because this ordinance will not have a significant effect on the environment, as ADUs will largely constitute infill housing which is exempt from CEQA.

FISCAL IMPACT:
Under the new laws, the City can only collect a proportional share of fees for ADUs 750 square feet or more, and may not collect any impact fees or park fees for units less than 750 square feet in floor space. This will result in less collected revenue for services such as Police and Fire to offset potential impacts associated with new ADUs and JADUs.

ATTACHMENTS:
- ✓ Ordinance No. 2020-01, Updated ADU Ordinance
- ✓ January 8, 2020 Staff Report

ORDINANCE NO. 2020-01

AN ORDINANCE OF THE CITY OF NEVADA CITY AMENDING SECTION 17.72.020 THROUGH SECTION 17.72.038 IN ORDER TO UPDATE THE CITY'S ORDINANCE PERTAINING TO ACCESSORY DWELLING UNITS IN COMPLIANCE WITH ADOPTED STATE LEGISLATION

WHEREAS, the City of Nevada City, California ("City") is a municipal corporation, duly organized under the constitution and laws of the State of California; and

WHEREAS, the Planning and Zoning Law authorizes cities to act by ordinance to provide for the creation and regulation of accessory dwelling units ("ADUs") and junior accessory dwelling units ("JADUs"); and

WHEREAS, in 2017 and 2019, the California Legislature approved, and the Governor signed into law a number of bills ("New ADU Laws") that, among other things, amended Government Code section 65852.2 and 65852.22 to impose new limits on local authority to regulate ADUs and JADUs; and

WHEREAS, the City desires to amend its local regulatory scheme for the construction of ADUs and JADUs to comply with the amended provisions of Government Code sections 65852.2 and 65852.22; and

WHEREAS, failure to comply with Government Code sections 65852.2 and 65852.22 (as amended) as of January 1, 2020 limits the City to the application of the default standards provided in Government Code sections 65852.2 and 65852.22 for the approval of ADUs and JADUs; and

WHEREAS, staff and the City Attorney prepared the proposed ordinance, including the proposed language and terminology, and any additional information and documents deemed necessary for the Planning Commission to take action; and

WHEREAS, on December 19, 2019, the Planning Commission held a duly-noticed public hearing and considered the staff report, recommendations by staff, and public testimony concerning the proposed ordinance;

WHEREAS, the City Council held a duly-noticed public hearing for a first reading on January 8, 2020, and a second reading on January 22, 2020 and considered the staff report, recommendations by staff, recommendations by the Planning Commission, and public testimony concerning the proposed ordinance;

NOW THEREFORE, THE CITY COUNCIL OF THE CITY OF NEVADA CITY DOES ORDAIN AS FOLLOWS:

Section 1. Section 17.72.020 through section 17.72.038 are hereby amended to read as follows and sections 17.72.027 and 17.72.032 are hereby added to read as follows. All other provisions of Chapter 17.72 remain in full force and effect.

17.72.020 - Accessory dwelling units—Purpose and definitions.

A. Purpose. The City of Nevada City finds and declares that accessory dwelling units are an important form of housing that contributes to the character and diversity of housing opportunities in Nevada City. Accessory dwelling units provide workforce housing, housing for family members, students, elderly, in-home health care providers, the disabled and others, at below market rental rates within existing neighborhoods. It is the intent of Nevada City to encourage accessory dwelling units and, additionally, to impose standards on such units that will enable homeowners to create accessory dwelling units that will be compatible, as much as possible, with their neighborhoods. An additional purpose of this ordinance is to comply with Sections 65852.2 and 65852.22 of the California Government Code relative to accessory dwelling units and junior accessory dwelling units.

B. Definitions.

(1) The terms “accessory dwelling unit,” “public transit,” “passageway, and “tandem parking” all have the same meaning as that state in Government Code section 65852.2 as that section may be amended time to time.

(2) “Housing Organization” as defined in Section 65589.5, subdivision (k)(2).

(2) “Junior accessory dwelling unit” shall have same meaning as that stated in Government Code section 65852.22(h)(1) as that section may be amended time to time.

17.72.022 - Accessory dwelling units—Application for accessory dwelling unit permit.

A. Accessory dwelling units are permitted in all zones within the City where single-family or multi-family residential units are permitted, subject to the owner first obtaining an accessory dwelling unit permit from City staff. Any application for an accessory dwelling unit that meets the unit size standards and development standards contained in Sections 17.72.024 and 17.72.026, or is the type of accessory dwelling unit described in Section 17.72.027, shall be approved ministerially by the city planner by applying the standards herein and without a public hearing.

B. An application for an accessory dwelling unit shall be made by the owner of the parcel on which the primary unit sits and shall be filed with the city planner on a city-approved application form and subject to the established fee.

17.72.024 - - Accessory dwelling units—Unit size standards.

The maximum floor area of an accessory dwelling unit shall not exceed either:

A. Eight hundred fifty (850) square feet for an accessory dwelling unit that is a studio or one-bedroom unit; or

B. One thousand (1000) square feet for an accessory dwelling unit that has two or more bedrooms.

17.72.026 - Accessory dwelling units—Development standards.
Any permit for an accessory dwelling unit shall be subject to the development standards listed below.

A. Legal lot/residence. An accessory dwelling unit shall only be allowed on a lot within the city that contains a legal, single-family or multi-family residence as an existing or proposed primary unit on a lot.

B. Number of accessory dwelling units per lot.
   1. For lots with proposed or existing single-family residences, no more than one (1) attached or detached accessory dwelling unit shall be permitted on the lot.
      a. Notwithstanding the above, a lot with a single-family residence may have one (1) junior accessory dwelling unit and (1) detached accessory dwelling unit.
   2. For lots with existing multi-family residential dwellings:
      a. No more than twenty-five percent (25%) of the number of the existing units, but at least one (1) unit, shall be permitted as accessory dwelling units constructed within the non-livable space of the existing building provided that applicable building codes are met; or
      b. No more than two detached accessory dwelling units, provided that no such unit shall be more than sixteen (16) feet in height, and have a minimum of four-foot side and rear yard setbacks. The maximum square footage of detached accessory dwelling units on lots with existing multi-family residential dwellings shall comply with the limits set forth in Section 17.72.024.

C. Building Code Compliance. All new accessory dwelling units must satisfy the requirements contained in the building code and fire code as currently adopted by the city, including applicable energy efficiency standards associated with Title 24 of the California Code of Regulations. However, fire sprinklers shall not be required if they are not required for the primary residence.

D. Fees and Charges.
   1. City/public utilities.
      a. All accessory dwelling units must be connected to public utilities, including water, electric, and sewer services.
      b. Except as provided in subsection c below, the City may require the installation of a new or separate utility connection between the accessory dwelling unit and the utility. The connection fee or capacity charge shall be proportionate to the burden of the proposed accessory dwelling unit based on either its square feet or number of drainage fixture unit values.
      c. No separate connection between the accessory dwelling unit and the utility shall be required for units created within a single-family dwelling, unless the accessory dwelling unit is being constructed in connection with a new single-family dwelling.

d. Regardless of where it is located, for the purposes of calculating utility connection fees or capacity charges, accessory dwelling units shall not be considered a new residential use unless the accessory dwelling unit was constructed with a new single-family dwelling.

2. Impact Fees.
   a. For accessory dwelling units of seven hundred fifty (750) square feet or larger, all impact fees applicable to accessory dwelling unit's construction shall be paid to the city in amounts proportional to the size of the accessory dwelling unit relative to the square footage of the primary dwelling unit.
   b. For accessory dwelling units seven hundred forty-nine (749) square feet or smaller, no impact fees shall be charged, unless otherwise allowed by state law.
   c. For purposes of this subsection, "impact fee" has the same meaning as specified in Government Code section 66000(b) and also includes in-lieu park fees as specified in Government Code section 66477.
3. Application Fees. Application fees for an accessory dwelling unit shall be paid in an amount specified by resolution of the City Council.
4. Exception for lower income housing. Newly permitted accessory dwelling units shall not be required to pay application, or sewer and water hookup fees if accompanied by a deed restriction ensuring affordable rent to low or very low income household, as defined in Sections 50105 and 50079.5 of the California Health and Safety Code. Said deed restriction shall be effective for a minimum of 30 years. (2003 Housing Element Policy 2b).

E. Parking.
1. The City shall not require the owner to provide more than one additional parking space per accessory dwelling unit or per bedroom, whichever is less. The required parking space may be provided as:
   a. Tandem parking on an existing driveway; or
   b. Within a setback area or as tandem parking in locations determined feasible by the City for such use. Locations will be determined infeasible based upon specific site or regional topographical or fire and life safety conditions, or that it is not permitted anywhere else in the City.
2. No parking shall be required for a studio accessory dwelling unit that does not have a separate bedroom.
3. Notwithstanding the foregoing, no parking spaces shall be required for accessory dwelling units in the following instances:

   a. It is located within one-half mile walking distance of public transit;
   b. It is located within an architecturally and historically significant district;
   c. It is part of a proposed or existing primary residence or an accessory structure;
   d. When on-street parking permits are required but not offered to the occupant of the accessory dwelling unit; or

e. Where there is a car share vehicle located within one block of the accessory dwelling unit.

4. When a garage, carport, or covered parking structure is demolished in conjunction with the construction of an accessory dwelling unit or converted to an accessory dwelling unit, the off-street parking spaces do not have to be replaced.

F. Occupancy. Until January 1, 2025, the City shall not impose an owner-occupancy requirement on any newly permitted accessory dwelling unit on a lot with a single family dwelling. After that date this prohibition shall no longer be of force and effect unless otherwise prohibited by state law, and one of the units on the property must be occupied by the property owner. The city shall require the property owner to file a deed restriction outlining the owner-occupancy requirement. The purpose of the deed restriction is to create a perpetual notice to the new purchasers of the requirement to maintain the owner-occupancy requirement.

G. Prohibition on separate sale of accessory dwelling unit. Accessory dwelling units may be rented separate from the primary residence, but may not be sold or otherwise conveyed separate from the primary residence.

H. Conversion of existing primary unit. An existing primary dwelling may be converted to a dwelling unit if it complies with all applicable requirements of this ordinance. If so, a new, larger primary residence may be constructed.

I. Design requirements for new units. All new accessory dwelling units must comply with the following design requirements:

1. The materials, colors, and architecture shall be similar to and compatible with those of the primary unit.
2. Accessory dwelling units shall not exceed16-feet in height unless constructed over a garage, in which case the ADU shall not exceed the height of the primary residence or 35-feet
3. Accessory dwelling unit entrances shall be oriented to face the street except that if topographic or other site constraints prevent such orientation, the entrance shall be screened from neighboring properties.
4. Lighting shall not spill on to neighboring lots.

J. Accessibility standards. New construction of any ground level accessory dwelling unit shall be designed and constructed to allow for disability/accessibility standards. Plans shall demonstrate future entrance capability and actual construction shall include adequate door and hallway widths, maneuvering space in kitchens and bathrooms, and structural reinforcements for grab bars.

K. No passageway shall be required in conjunction with the construction of an accessory dwelling unit.

L. For residential development, the garage door shall remain in place and look functional, or the garage door shall be removed. If the door is removed, the project shall include architectural features (including siding, doors, windows, trim and accent details), and landscaping (such as a landscape strip to disconnect the driveway from the building wall) so it is not apparent that the structure was originally a garage.

M. Any ADU taking advantage of reduced setbacks pursuant to Section 17.72.027 shall not have doors or windows within such setback unless required to meet health and safety requirements

N. Limitation on Use as a Hosted Short-term Rental: The following types of accessory dwelling units shall not be permitted to operate as a hosted short-term rental pursuant to Chapter 17.72.080.

1. Any detached accessory dwelling unit in excess of 800 square feet
2. Any attached unit in excess of 640 square feet
3. Any unit permitted under the provisions allowed by Section 17.72.027

O. Setback requirements.

1. No setbacks are required for accessory dwelling units that are created by converting existing living area or existing accessory structures to new accessory dwelling units or constructing new accessory dwelling units in the same location and to the same dimensions as an existing structure.
2. For all other accessory dwelling units, there must be a minimum of four feet from side and rear lot lines, and comply with all other applicable front yard setbacks.
3. Any ADU or JADU that does not meet the setback standards of the base zoning designation shall not be permitted to utilize yard exceptions pursuant to Section 17.84.040 or be permitted for any further projections into side or rear yards pursuant to Section 17.84.050

P. A detached ADU may include an attached unconditioned garage that does not exceed 250 square feet.

17.72.027- Accessory dwelling units—Permitted regardless of compliance with other development standards and regulations.

A. Accessory dwelling unit permits shall be approved for the following types of accessory dwelling units, regardless of whether the application meets the development standards contained in this Title 17

1. For lots with single family dwellings, one of the following:

a. One interior accessory dwelling unit or one junior accessory dwelling unit per lot constructed within an existing or proposed single-family or accessory structure, including the construction of up to a one hundred fifty (150) square foot expansion beyond the same physical dimensions as the existing accessory dwelling structure to accommodate ingress and egress. The accessory dwelling unit or junior accessory dwelling unit must have exterior access and side and rear setbacks sufficient for fire safety. If the unit is a junior accessory dwelling unit, it must also comply with the requirements of section 17.72.032 below; or

b. One new, detached accessory dwelling unit with a minimum four-foot side and rear setbacks, up to eight hundred (800) square feet and no more than sixteen (16) feet high on a lot with an existing or proposed single family dwelling. A junior accessory dwelling unit may also be built within the existing

or proposed dwelling of such residence in connection with the accessory dwelling unit.

2. On a lot with an existing multifamily dwellings:

a. Accessory dwelling units may be constructed in areas that are not used as livable space within an existing multi-family dwelling structure (i.e., storage rooms, boiler rooms, passageways, attics, basements, or garages), provided the spaces meet state building standards for dwellings. The number of interior accessory dwelling units permitted on the lot shall not exceed twenty-five percent (25%) of the current number of units of the multi-family complex on the lot and at least one such unit shall be allowed. Units constructed pursuant to this subsection shall not exceed eight hundred (800) square feet in floor area; and

b. Up to two (2) detached accessory dwelling units may be constructed, provided they are no taller than sixteen (16) feet, and they have at least four (4) feet of side and rear yard setbacks. Units constructed pursuant to this subsection shall not exceed eight hundred (800) square feet in floor area.

B. Accessory dwelling units approved under this Section 17.72.027 shall not be rented for a term of less than thirty (30) days.

C. Accessory dwelling units or junior accessory dwelling units approved under this Section 17.72.027 shall not be required to correct legal nonconforming zoning conditions.

17.72.028 - Accessory dwelling units—General plan consistency.

In adopting these standards, the city recognizes that the approval of dwelling units may, in some instances, result in dwelling densities exceeding the maximum densities prescribed by the general plan. The city finds that this occurrence is consistent with the general plan, as allowed under state planning and zoning law applicable to dwelling units, and that the amendment furthers the goals, objectives, and policies of the general plan housing element.

17.72.029. Junior Accessory Dwelling Units.

A. Purposes: This Section provides standards for the establishment of junior accessory dwelling units, an alternative to the standard accessory dwelling unit. Junior accessory dwelling units will typically be smaller than an accessory dwelling unit, will be constructed within the walls of an existing or proposed single family residence and requires owner occupancy in the single family residence where the unit is located.

B. Size: A junior accessory dwelling unit shall not exceed 500 square feet in size.

C. Owner Occupancy: The owner of a parcel proposed for a junior accessory dwelling unit shall occupy as a primary residence either the primary dwelling or the junior accessory dwelling. Owner-occupancy is not required if the owner is a governmental agency, land trust, or housing organization.

D. Sale Prohibited: A junior accessory dwelling unit shall not be sold independently of the primary dwelling on the parcel.

E. Short term rentals: The junior accessory dwelling unit shall not be rented for periods of less than 30 days.

F. Location of Junior Accessory Dwelling Unit: A junior accessory dwelling unit shall be created within the existing walls of an existing primary dwelling.

G. Kitchen Requirements: The junior accessory dwelling unit shall include an efficiency kitchen, including a food preparation counter, cooking appliances, and storage cabinets that are of reasonable size in relation to the size of the junior accessory dwelling unit.

H. Parking. No additional parking is required beyond that required at the time the existing primary dwelling was constructed.

I. Fire Protection; Utility Service. For the purposes of any fire or life protection ordinance or regulation or for the purposes of providing service for water, sewer, or power, a junior accessory dwelling unit shall not be considered a separate or new unit, unless the junior accessory dwelling unit was constructed in conjunction with a new single-family dwelling. No separate connection between the junior accessory dwelling unit and the utility shall be required for units created within a single-family dwelling, unless the junior accessory dwelling unit is being constructed in connection with a new single-family dwelling.

J. Deed Restriction. Prior to the issuance of a building permit for a junior accessory dwelling unit, the owner shall record a deed restriction in a form approved by the city that includes a prohibition on the sale of the junior accessory dwelling unit separate from the sale of the single-family residence, requires owner-occupancy consistent with subsection (C) above, does not permit short-term rentals, and restricts the size and attributes of the junior dwelling unit to those that conform with this section.

17.72.030 - Accessory dwelling units/Junior accessory dwelling units—Appeal process.

A. Applicants may file an appeal for any staff decision related to an accessory dwelling unit or junior accessory dwelling unit permit consistent with this section.

B. The appeal shall be made to the planning commission. The planning commission shall review the appeal at a public meeting. The appeal, however, shall be reviewed and either approved or rejected ministerially, in the same manner as described in Section 17.72.022 of this chapter, and not as part of a noticed hearing. The planning commission will not consider such an appeal, unless the appeal contains allegations that the determination to deny or impose conditions exceeded the authority granted to the city planner by this chapter. Said appeal must be filed within fifteen (15) days in accordance with the provisions of Section 17.88.050 of this Municipal Code.

17.72.038 - Guest houses.

"Guest houses" means living quarters within a detached building located on the same premises with the main building, for use by temporary guests of the occupants of the premises; such quarters may have a bath and toilet facilities, but no kitchen facilities and not be rented or otherwise used as a separate dwelling. Guest houses must be less than three hundred (300) square feet in area. Guest houses are not considered accessory dwelling units or junior accessory dwelling units for the purposes of this Chapter, so no accessory dwelling unit permit is required and they are not subject to the regulations contained in this Chapter.

SECTION 2. CEQA. This Ordinance is exempt from the California Environmental Quality Act (CEQA) under CEQA Guidelines section 15061 because CEQA only applies to projects which have the potential to have a significant impact on the environment and because the environmental impact of each individual project will be analyzed at the time that the project is submitted. There are no impacts of this ordinance which have the potential to cumulatively cause a significant effect on the environment because the city is so small, and it is not anticipated that there will be enough facilities to cause such an impact.

SECTION 3. Effective Date. This ordinance shall become effective on the 31st day after adoption.

SECTION 4. Severability. If any portion of this ordinance is found to be unenforceable, each such provision shall be severed, and all remaining portions of this ordinance shall be enforced to the maximum extent legally permissible.

SECTION 5. Certification. The City Clerk shall certify to the passage and adoption of this ordinance as required by law.

PASSED, APPROVED AND ADOPTED this ___th day of _____2020 by the following vote:

AYES: COUNCILMEMBERS:
NOES: COUNCILMEMBERS:
ABSENT: COUNCILMEMBERS:

_____
REINETTE SENUM, MAYOR

ATTEST:

_____
Niel Locke, City Clerk

APPROVED AS TO FORM

_____
Crystal Hodgson, City Attorney

REPORT TO CITY COUNCIL

City of Nevada City
317 Broad Street
Nevada City, CA 95959
www.nevadacityca.gov

January 8, 2020

TITLE: Ordinance for the Regulation of Accessory Dwelling Units

RECOMMENDATION: Waive reading of Ordinance, read title only and introduce for first reading, Ordinance 2019-XX to amend Section 17.72.020 through Section 17.72.038 in order to update the City's Ordinance pertaining to Accessory Dwelling Units in compliance with adopted State legislation

1. Find that Draft Ordinance 2019-XX is Exempt from the California Environmental Quality Act pursuant to CEQA Guidelines Sections 15282(h), 15303, 15305, and 15061.

2. Recommend to City Council that they adopt Draft Ordinance 2019-XX to amend Section 17.72.020 through Section 17.72.038 in order to update the City's Ordinance pertaining to Accessory Dwelling Units in compliance with adopted State legislation

CONTACT: Amy Wolfson, City Planner
Crystal Hodgson, City Attorney

BACKGROUND / DISCUSSION: Assembly Bill 2299 (AB 2299) and Senate Bill 1069 (SB 1069) were passed in the 2015-2016 legislative session and amended California laws relating to Secondary Dwelling Units (now referred to as Accessory Dwelling Units (ADUs) under the new laws). The amendments relate to Government Code § 65852.2. More recently, in October of this year the California Legislature approved, and the Governor signed into law several bills (AB 68, AB 881 and SB 13) that further impose limits on local authority to regulate Accessory Dwelling Units, pursuant to Government Code sections 65852.2 and 65852.22. The New ADU Laws take effect January 1, 2020.

The draft amendments to the City's Municipal Code relating to Secondary Dwelling Units (updated to reference "accessory dwelling units") are intended to bring the Code into compliance with California State law as it pertains to local regulation of accessory dwelling units ("ADUs") and Junior Accessory Dwelling Units ("JADU"). These new laws are aimed at easing the housing shortage in the state, and generally, they expand the number of situations in which ADUs and JADUs must be allowed and limit the fees and regulations that cities may impose. The new laws also shorten the time line for approval of accessory dwelling unit permits, which remain ministerially issued permits.

In addition to the required State regulations, staff also included some recommendations for updating existing language for the sake of enforcement clarity. Specifically, staff asked the Planning Commission to review to existing provisions: 1) requiring screening of the front entrance from neighboring properties and 2) that requires a height restriction based on the "height level of the tallest building on the lot." These provisions have been challenging to interpret and staff is recommending that theses sections be updated with clarifying language so that they can be more effectively enforced. The Planning Commission recommended updated language that is shown highlighted in yellow in the draft Ordinance, attached, along

with their recommendation for objective design standards applicable to ADUs in specific circumstances.

DRAFT ORDINANCE (Accessory Dwelling Unit Ordinance)
The amended Ordinance changes all references of "second dwelling units" to "accessory dwelling units" consistent with State terminology. The new ADU laws impose significant changes to the City's current Ordinance including size limitations, setback requirements, parking standards, and fee waivers/reductions. Attached to this staff report is a table that compares existing standards with the newly required standards and a summary of the new requirements is outlined below:

A. **Lot Size Requirements**: Cities can no longer require a minimum lot size for ADUs.

B. **Floor Area**. The law imposes new maximum floor areas. The specific maximums that cities must adopt, depends on whether the unit is constructed inside an existing dwelling, is attached, detached, and whether the unit can be constructed in compliance with other city development standards.

C. **Setbacks.** Cities are now limited to require up to 4-foot side and rear yard setbacks for detached units or attached units that are built in new footprints and zero setbacks for ADUs that are replacement ADUs in the same location with the same dimensions.

D. **Parking**. In most cases, cities can no longer require additional parking be provided for ADUs, and cities can no longer require replacement parking when a garage or carport is converted into an ADU. The proposed ordinance requires that one parking space be provided for ADUs with one or more bedrooms, unless one of the exceptions provided by state law applies.

E. **Time for Approval of ADU Permit.** The new law shortens the cities' timelines to review and approve applications for ADUs from 120 days to 60 days. The ordinance does not contain this requirement, but staff has been advised to follow the new deadlines for processing ADU applications.

F. **Multi-family / Mixed Use Zones.** The new law requires cities to allow ADUs in multi-family zones; formerly, cities could limit ADUs to lots with single family dwellings. The proposed ordinance allows for the construction of ADUs on lots with single family, or mixed family dwellings.

G. **ADUs that Must Be Approved.** In general, and despite any other development standards applicable to ADUs a city may have adopted, a city must ministerially approve the following four types of ADUs or JADUs:
   1. A unit within (or only expands original footprint by 150 square feet or less to accommodate ingress and egress) a single family dwelling or accessory structure, with exterior access from the proposed or existing single family dwelling, and the setbacks are sufficient for fire safety.
   2. A newly constructed, detached ADU on a lot with proposed or existing single-family dwelling that has a minimum of 4 feet of rear and side yard setbacks. City may limit the floor area of these to 800 square feet, and may limit the height to 16 feet.

3. Within a residential or mixed use zone, a city must allow the owner of a multi-family unit to construct at least one, and up to 25% of the total number of units, as ADUs that are constructed in spaces not currently used as livable space (e.g. storage rooms, boiler rooms, passageways, attics, basements, or garages) to be used as ADUs if the spaces meet state building standards for dwellings.
4. Two detached ADUs lots with existing multifamily provided they are no taller than 16 feet and there are a minimum of 4 feet rear and side yard setbacks.

The four ADU scenarios above are restricted from being used as hosted short-term rentals.

H. **Impact Fees.** The new laws limit the amount of impact fees that the city can charge in that it must only collect a proportional share of fees for ADUs 750 square feet or more, and it may not collect any impact fees or park fees for units less than 750 square feet in floor space. The city may still collect pass-through fees for school districts from all ADUs and JADUs.

I. **Water Connection and Fees and Mandatory Connections of Utilities**. The new law expands the instances in which the city may charges ADU applicants for new connection fees or capacity chargers including water and sewer service.

J. **Owner-Occupancy Requirement**. From January 1, 2020 to January 1, 2025, cities may not impose an owner-occupancy requirement on ADUs.

K. **HCD Review**. The new law requires cities to submit their ADU ordinances to HCD for its review within 60 days from the date the ordinance was adopted. HCD may require cities to amend provisions of their ordinances that are inconsistent with the state law. The proposed ordinance (Section 6) directs the City Clerk to transmit the ordinance to HCD once it is approved within the 60-day deadline.

L. **JADUs.** Junior Accessory Dwelling Units were introduced in 2016 state legislation as an option for cities to allow smaller, interior dwelling units. The new law now mandates that cities' allow for them, and provides requirements for their approval. Timeframes for approval of application for JADUs are also 60 days, rather than the previously allowed 120 days.

PLANNING COMMISSION RECOMMENDATION: The Planning Commission reviewed the draft Ordinance at their December 19, 2019 regular meeting. It can be reviewed between 1:25:35 To 2:46:00 on the video record. Their recommendation included optional objective design standards along with some revisions of existing vague language with more precise language. The changes they recommended from the original draft are as follows:

17.72.026 (I.2) Accessory Dwelling units shall not exceed 16-feet in height unless constructed over a garage, in which case the ADU shall not exceed the height of the primary residence or 35-feet

17.72.026 (I.3) Accessory Dwelling Unit Entrances shall be oriented to face the street except that if topographic or other site constraints prevent such orientation, the entrance shall be screened from neighboring properties.

17.72.026 (M)	Any ADU taking advantage of reduced setbacks pursuant to Section 17.72.027 shall not have doors or windows within such setback unless required to meet health and safety requirements**.**
17.72.026 (P)	A detached ADU may include an attached unconditioned garage space that does not exceed 250 square feet.
17.72.029 (G)	Kitchen Requirements: The junior accessory dwelling unit shall include an efficiency kitchen, including a food preparation counter, a cook stove (as opposed to the term "cooking appliances" provided by the State language), and storage cabinets that are of reasonable size in relation to the size of the junior accessory dwelling unit.

In addition to the above changes, staff made a few minor formatting edits that do not have a substantive affect on the recommended Ordinance.

ENVIRONMENTAL CONSIDERATIONS: The state legislature created a specific exemption to CEQA for adoption of ordinances to regulate accessory dwelling units in compliance with state law, found in CEQA Guidelines Section 15282(h) and in Public Resources Code Section21080.17. The ordinance is also exempt from review under CEQA Guidelines Sections 15303 (new construction of small structures), 15305 (minor alterations to land), and 15061, because this ordinance will not have a significant effect on the environment, as ADUs will largely constitute infill housing which is exempt from CEQA.

FISCAL IMPACT: Under the new laws the City can only collect a proportional share of fees for ADUs 750 square feet or more, and may not collect any impact fees or park fees for units less than 750 square feet in floor space. This will result in less collected revenue for services such as Police and Fire to offset potential impacts associated with new ADUs and JADUs.

ATTACHMENTS:

- ✓ Resolution No.2019-XX, Finding the Ordinance Exempt from CEQA
- ✓ Ordinance No. 2019-XX, Updated ADU Ordinance
- ✓ Table Summary of Required Changes

REPORT TO CITY COUNCIL

City of Nevada City
317 Broad Street
Nevada City CA 95959
www.nevadacityca.gov

January 22, 2020

TITLE: Letter Addressing Critical Matters Related to the PG&E Bankruptcy

RECOMMENDATION: Review the draft letter, approve content and authorize the Mayor to sign.

CONTACT: Catrina Olson, City Manager

BACKGROUND/DISCUSSION:
At the January 8, 2020 City Council meeting the Council reviewed and considered a proposal from the City of San Jose Mayor Sam Liccardo and over 50 local elected officials from PG&E's service area to restructure PG&E from an investor-led company to one that is customer-owned.

After careful consideration, the City Council directed staff to prepare a letter to join the City of San Jose and the other local leaders across California in the growing coalition of local communities supporting proposed structural changes for PG&E including the possibility of a customer-owned utility.

The attached proposed letter requests the City be added to the list of cities requesting a structural change to PG&E. The letter also supports the recommendations stated in the November 4, 2019 letter to the California Public Utilities Commission titled "Critical Matters Related to the PG&E Bankruptcy" and look forward to working with you and other local leaders to achieve changes for PG&E.

ENVIRONMENTAL CONSIDERATIONS: None.

FINANCIAL CONSIDERATIONS: None.

ATTACHMENT:
- ✓ Letter Addressing Critical Matters Related to the PG&E Bankruptcy

City of Nevada City

Reinette Senum, Mayor
Erin Minett, Vice Mayor
Duane Strawser, Council Member
Valerie Moberg, Council Member
David Parker, Council Member

January 22, 2020

Mayor Sam Liccardo
City of San Jose
200 East Santa Clara Street
San Jose, CA 95113

Dear Mayor Liccardo,

As local leaders of the City of Nevada City our immediate attention focuses on the recovery of our neighbors, businesses and communities from recent tragic fires and power shut-offs. The City Council have serious concerns about whatever emerges from the bankruptcy of Pacific Gas and Electric Company and its parent, PG&E Corporation. We write in our individual capacities as elected and appointed leaders in expressing the City's interest in being a part of the growing coalition of local leaders advocating changes to PG&E. We are requesting to be added to the list of cities in this coalition.

At the City of Nevada City's Council Meeting of January 8, 2020, the City Council agreed to join the City of San Jose and the other local leaders across California in the growing coalition of local communities to support a proposed structural change for PG&E including the possibility of it being a customer-owned utility. We support the recommendations stated in the November 4, 2019 letter to the California Public Utilities Commission titled "Critical Matters Related to the PG&E Bankruptcy" and look forward to working with you and other local leaders to achieve the changes for PG&E.

Sincerely,

Reinette Senum, Mayor
City of Nevada City

REPORT TO CITY COUNCIL

City of Nevada City
317 Broad Street
Nevada City CA 95959
www.nevadacityca.gov

January 22, 2020

TITLE: Award of Contract for Water Improvements on Boulder Street

RECOMMENDATION: Pass Resolution 2020-XX, a Resolution of the City Council of the City of Nevada City to award a contract to PSCE in the amount of $82,605 plus $8,000 in contingencies for Water Improvements on Boulder Street in Nevada City and authorize the Mayor to sign.

CONTACT: Bryan K. McAlister, City Engineer

BACKGROUND/DISCUSSION:
The City Engineer and Public Works staff identified Water Improvements on Boulder Street which are necessary for distribution of water service to City residents. The project consists of new water pipe and water services for replacement of aging infrastructure, as further shown and described in the contract.

City staff solicited bids for Water Improvements on Boulder Street from local contractors. Qualified bids received are as follows:

- Hansen Bros., Grass Valley CA $ 104,611
- PSCE, Brownsville CA $ 82,605
- C&D Construction $ 142,542

PSCE was selected as the lowest responsive and responsible bidder.

FISCAL CONSIDERATIONS: The project will be funded as authorized in the fiscal year 2018/2019 water fund appropriations for water distribution and by Measure "S" for pavement rehabilitation.

ATTACHMENT:
- ✓ Resolution 2020-XX, a Resolution of the City of Nevada City to Award a Contract to PSCE for the Water Improvements on Boulder Street and Authorize the Mayor to Sign
- ✓ Contract for Water Improvements on Boulder Street in Nevada City

RESOLUTION NO. 2020-XX

A RESOLUTION OF THE CITY COUNCIL OF THE CITY OF NEVADA CITY TO AWARD A CONTRACT TO PSCE FOR WATER IMPROVEMENTS ON BOULDER STREET IN NEVADA CITY AND AUTHORIZE MAYOR TO SIGN

WHEREAS, The City of Nevada City provides water service to residents and customers within City limits and adjacent properties not within NID's District boundary; and

WHEREAS, The City of Nevada City provides maintenance of the water distribution system which includes replacement and repair of aging infrastructure; and

WHEREAS, City has caused to be prepared certain plans, specifications and other contract documents pertaining to the Water Improvements on Boulder street; and

WHEREAS, consistent with Municipal Code requirements, City staff advertised and received bids for Water Improvements on Boulder street in Nevada City.

NOW, THEREFORE, BE IT RESOLVED by the City Council of the City of Nevada City to award the contract to PSCE in the amount of $82,605 plus $8,000 contingencies, in the form attached hereto as Exhibit "A" and incorporated herein by this reference, for Water Improvements on Boulder Street in Nevada City and authorize the Mayor to sign.

PASSED AND ADOPTED at the regular meeting of the City Council of the City of Nevada City on the 22nd day of January, 2020, by the following vote:

AYES:

NOES:

ABSENT:

ABSTAIN:

_____

Reinette Senum, Mayor

ATTEST:

_____

Niel Locke, City Clerk

BOULDER ST
WATER LINE

City of Nevada City, 95959
Nevada County, California

Bryan K. McAlister
PE C58570
PLS 9199

William J. Falconi
PE 25842
PLS 4911

NOTICE TO CONTRACTOR'S

Boulder Street Waterline

Sealed proposals for Boulder Street Waterline will be received by the City at City Hall, 317 Broad Street, Nevada City, California, 95959, until **3:00 PM on Thursday Jan. 16th, 2020**, at which time, or as soon thereafter as practicable, all such proposals will be publicly opened and read at City Hall, 317 Broad Street, Nevada City, California.

No Pre-Bid Meeting is scheduled for this project. Please contact City Staff if you would like to meet at the project site. Questions or requests for clarification shall be submitted in writing to bryan.mcalister@nevadacityca.gov.

Bids shall be enclosed and sealed in an envelope addressed to the City of Nevada City at the above stated address and shall be marked " **Boulder Street Waterline**." **NO BID BONDS ARE REQUIRED**. The work includes the furnishing of all labor, materials, and equipment required for the job in accordance with the plans, specifications and other contract documents as set forth by the City Engineer. Such bid documents will be on file with the City staff and are available for inspection during office hours. Bid documents may be obtained at the office of said City Hall at 317 Broad Street, Nevada City, California on or after

.

****

The City reserves the right to reject all bids; or to accept any portion of bid schedule; to reject any bid which is incomplete or irregular; to determine which proposal is, in its judgment, the lowest responsible bid of a responsible bidder and to waive any informality or minor irregularity of any bid.

DATED: December 27, 2019 CITY OF NEVADA CITY

_____

William Falconi.

Assistant City Engineer

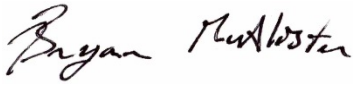

_____

Bryan McAlister

City Engineer

PROPOSAL/CONTRACT

Boulder Street Waterline
Nevada City, CA

TO: City of Nevada City, City Hall, Nevada City, California.

The undersigned, as a bidder, submits the following proposal for the **Boulder Street Waterline** improvements in the City of Nevada City, California, and offers to perform all work and furnish all labor, materials, tools, equipment, power and water as required for the completion of said project, in accordance with the plans, specifications and all other contract documents. The bidder has inspected the project site and has examined all conditions affecting the proposed work. The bidder is licensed with Contractors State License Board and is registered as a public works contractor with the Department of Industrial Relations as required to bid on this contract.

If this bid is accepted, the bidder agrees to execute the Agreement, and furnish to the City all documents and evidences of insurance, within ten (10) days after receiving written notice of the award of contract, and complete the project within **thirty (30) working days** after receiving written notice to proceed. **No bid bond is required for this project.**

Attached to this bid and made a part hereof is a list of proposed subcontractors, setting forth all information required by Section 4104 of the Government Code.

The undersigned is (state whether individual, partnership or corporation) Individual.

DATED: 1 15 2020

FIRM NAME: PSCE

ADDRESS: 8411 Laposte rd
Brownsville CA 95919

PHONE: 675-9476

CELL PHONE: 530 362-2450

CONTRACTOR'S #: 1038603

EXPIRATION: 3 2020

NEVADA CITY BUSINESS LICENSE #: 01237

3 31 EXPIRATION: 2020

BY: _____
Signature of Authorized Person

Contact Person: Chris Schaeh

PSCE

BID SCHEDULE

CITY OF NEVADA CITY
BOULDER ST WATER LINE

No.	Quantity	Unit	Item Description	Unit Price	Total Price
1.)	375	LF	6" C900 Waterline	$ 57.90	$ 21,731
2.)	175	LF	6" D.I. Pipe **(Supplied by City)**	$ 54.72	$ 9,576
3.)	3	EA	6"' Gate Valve Assembly	$ 2,316	$ 6,950
4.)	1	EA	4" Gate Valve Assembly	$ 2,256	$ 2,256
5.)	1	EA	Fire hydrant Assembly w/bollards	$ 6,187	$ 6,187
6.)	1	EA	Connect to existing Hydrant	$ 3,522	$ 3,522
7.)	50	TN	Asphalt Trench Resurfacing	$ 320.00	$ 16,000
8.)	2	EA	1" Water Service – connect to existing (New saddle and Corp, connect to exist PE pipe) 244, 254 Boulder	$ 1,850	$ 3,700
9.)	2	EA	1" Water Service – new pipe to meter (New saddle, 2-Corps, new PE pipe and connect to Meter) 255, 260 Boulder	$ 3,712	$ 7,425
10.)	1	EA	4" Water Service – connect to existing	$ 5,258	$ 5,258
TOTAL:					$ 82,605

Note

1. Project shall be prevailing wages.
2. Unit price for pipe shall include all traffic control, trench plates, potholing, sawcutting, fittings, connections, excavation, bedding, backfill and testing.
3. Unit price for water service shall include all labor and materials to connect to existing house service. Water Meter to be supplied by the City. All other materials and meter boxes to be provided by the contractor.
4. Unit price for Hydrant Assembly shall include all materials shown on hydrant detail and shall include costs for providing and installing bollards.
5. Unit price for trench resurfacing shall include **T-grind** and asphalt paving, surface preparation and compaction of agg. base.

LIST OF SUBCONTRACTORS

NAME	PLACE OF BUSINESS	PORTION OF WORK
1.		
2.		
3.		
4.		
5.		
6.		
7.		
8.		
9.		
10.		

AGREEMENT

THIS AGREEMENT is made this _____ day of _____, between the CITY OF NEVADA CITY, a municipal corporation, hereinafter called "City," and _____, hereinafter called "Contractor."

WHEREAS, City has caused to be prepared certain plans, specifications and other contract documents pertaining to the BOULDER ST WATER LINE in said City: and

WHEREAS, after notice duly given, City has awarded the contract for such work to Contractor;

NOW, THEREFORE, IT IS AGREED by and between said parties as follows:

1. Scope of Work. The contractor agrees to furnish all labor, materials, tools and equipment, required to complete the improvements in Nevada City, California, in accordance with the plans, specifications and other contract representation made in mandatory meetings. All such work shall be performed in a good and workmanlike manner and to the satisfaction of the designer of said project.

2. Contract Price. As consideration for all such work, City agrees to pay to Contractor the total sum of _____ ($_____) Dollars, payable in the manner hereinafter set forth.

3. Contract Documents. The complete contract between the parties hereto consists of the Notice to Contractors, the Information to Bidders, the Bid Proposal, the General Conditions, the Plans and Specifications, and all other drawings and printed or written explanatory matter pertaining thereto. All of the foregoing documents are intended to cooperate, so that any work or requirement specified in any of them is to be carried out or observed the same as if mentioned in all.

4. Time for Performance. Within five (5) days after the execution of this Agreement, City shall give Contractor written Notice to Proceed, and thereafter Contractor shall commence the work and shall prosecute the same with due diligence until completion and acceptance by City; provided, however, that all such work shall be completed and ready for use within **thirty (30) working days** after Contractor receives said Notice to Proceed.

5. Extension of Time. If, because of adverse weather conditions, strikes, inability of the Contractor (through no fault on his/her part) to obtain necessary materials, or other cause beyond the reasonable control of Contractor, Contractor is unable to complete the required work within the allowed time, he shall be entitled to an extension or extensions of such time, commensurate with the unavoidable delay thus caused; provided, however that Contractor shall apply to City for approval of any such extension prior to the expiration of the time for performance as specified in the preceding paragraph.

6. Contractor's Failure to Complete Work. If Contractor fails to prosecute the work with such diligence as will insure its completion within the time hereinabove specified, or any extension thereof, or fails to complete such work within such time, or if Contractor shall otherwise violate this Agreement, City may give written notice to Contractor and his sureties of City's intention to terminate this Agreement unless, within five (5) days after services of such notice, satisfactory arrangements are made with the City for the completion of such work or the curing of such breach; and if such arrangements are not made within such time, City may, at its option, terminate this Agreement by giving written notice of such termination to Contractor and his sureties.

7. Payments to Contractor. On or before the tenth day of each month during the progress of the work, Contractor shall submit to the City Engineer an itemized statement of all labor and materials incorporated into the improvement during the preceding month and the portion of the contract price applicable thereto. City shall pay to Contractor a sum equal to ninety (90%) percent of the contract price apportionment for approved progress payments. The remaining ten (10%) percent shall be paid to Contractor thirty-five (35) days after final acceptance of the work by City.

8. Indemnification. Contractor agrees to hold City, and its officers, agents, and employees harmless from any and all liability and claims for damages for death and personal injury, and for property damage, incident to or arising out of the operations of Contractor or any subcontractor under this Agreement, and Contractor further agrees to defend City, and its officers, agents, and employees in any and all lawsuits which may be brought for such damages caused, or alleged to have been caused, by such operations. In addition, Contractor agrees to furnish to the City evidences of insurance coverage. The approval of such insurance by City shall not constitute a waiver or limitation of any rights under this indemnity agreement, regardless of whether such insurance shall be held to be inapplicable to any such damage or claims therefore.

Executed in duplicate this _____ day of _____, _____.

ATTEST:

_____

CITY OF NEVADA CITY

By: _____
(Mayor)

By: _____
(Contractor)

By: _____
(Authorized Officer)

GENERAL CONDITIONS

1. Inspection of Construction

The Engineer shall have access to the work and the site of the work at all times and the Contractor shall afford such access to the Engineer and shall furnish all relevant information requested by him. At the request of the Engineer the Contractor shall open for inspection any part of the work which has been covered up, and if any part of the work has been covered up in contravention of the instructions of the Engineer, or if on being opened up, is found not to be in accordance with the terms of the contract, the expense of opening and recovering shall be charged to the Contractor. If the work has been covered up but not in contravention of such instructions and is found to be in accordance with the terms of the contract, the actual cost of opening and recovering shall be borne by the City, and in such case, if the work of opening and recovering is done by the Contractor, it shall be considered as extra work and paid for accordingly.

2. Change Orders

If for any reason it becomes necessary or desirable to change the alignment, dimensions, or design of the work, the City shall have the right to issue written change orders therefore. If the Contractor considers that any such change involves extra work, he shall immediately so notify the Engineer in writing, and shall make claim for compensation for such work not later than the first day of the month following the month in which the work was performed. If, in the opinion of the Engineer, any change order results in a change in the amount of work performed, the contract price shall be adjusted for extra work or omitted work, as the case may be.

3. Contractor's Employees and Subcontractors

The Contractor shall at all times be responsible for the adequacy and efficiency of his employees and any subcontractor and the latter's employees. All workers shall have adequate skill and experience to perform properly the work assigned to them.

4. Errors and Omissions

If the Contractor in the course of the work becomes aware of any error or omission in the contract documents, or of any discrepancy between such documents and the physical conditions of the work site, he shall immediately inform the Engineer, who shall take such action as he may deem necessary in order to rectify the matter. Any work done after such discovery and without the authorization of the Engineer will be at the Contractor's risk.

5. Guaranty of Work

For a period of one (1) year after final acceptance of the work by the City, the Contractor shall make all Improvements and replacements arising out of any defective workmanship or materials. If the Contractor fails to make such repairs or replacements within ten (10) days after receiving written notice to do so, or within such further time as may be allowed by the City, the City may undertake such repairs or replacements, in which case the Contractor shall be liable to the City for the cost thereof.

6. Contractor's Responsibility for Work

The Contractor shall be responsible for the proper care and protection of the work, and of all materials delivered to the work site, until completion of the work and its final acceptance by the City.

7. Performance Bond

No Performance bond shall be required for this project.

8. Payment Bond

A payment (labor and materials) bond is required for public works contracts involving an expenditure in excess of twenty-five thousand dollars ($25,000). If the contract is in excess of this amount the contractor shall provide a payment bond to the City of Nevada City before commencement of work. Cost for the bond shall be included in the contractor bid proposal and no additional compensation will be provided.

A payment bond shall be in an amount not less than 100 percent of the total amount payable pursuant to the contract. The bond shall be in the form of a bond and not a deposit in lieu of a bond. The bond shall be executed by an admitted surety insurer.

9. Workmen's Compensation Insurance

The Contractor shall carry workmen's compensation insurance for all employees working on or about the site of the work, and if any work is subcontracted, the Contractor shall require each subcontractor to carry such insurance for all of the latter's employees, unless they are covered by the Contractor's insurance.

10. Insurance Requirements

CONTRACTOR shall purchase and maintain insurance in amounts of coverage not less than the following amounts:

General Liability: (Including operations, products and completed operations)	$1,000,000 per occurrence for bodily injury, personal injury and property damage. If Commercial General Liability Insurance or other form with a general aggregate limit is used either the general aggregate limit shall apply separately to this project/location or the general aggregate limit shall be twice the required occurrence limit.
Automobile Liability:	$1,000,000 per accident for bodily injury and property damage.

The Contractor shall deliver to the City, concurrently with the execution of the contract, certificates evidencing all insurance required by the contract, and each such certificate shall include a provision to the effect that the policy or policies cannot be canceled or materially modified unless the insurer gives the City at least fifteen (15) days written notice thereof prior to such cancellation or modification.

11. Prevailing Wages

Contractor shall pay each laborer, workman or mechanic in accordance with State and Federal Prevailing Wage Rates and the California Labor Code. These wage rates are hereby made a part of this contract:

State General Prevailing Wage Determinations in effect on date advertised
General prevailing wage determination of Journeyman and Apprentice Prevailing Wage Rates can be accessed at the following websites: https://www.dir.ca.gov/oprl/DPreWageDetermination.htm
And http://www.dir.ca.gov/das/publicworks.html

Reference: Labor Code http://www.labor.ca.gov/laborlawreg.htm

Federal Prevailing Wage Determinations in effect on bid date
http://www.wdol.gov/wdol/scafiles/davisbacon/ca.html

Electronic Certified Payroll Records

- All contractors must furnish electronic certified payroll records to the Labor Commissioner using the online eCPR data system
- No contractor or subcontractor may be listed on a bid proposal for a public works project unless registered with the Department of Industrial Relations pursuant to Labor Code section 1725.5 [with limited exceptions from this requirement for bid purposes only under Labor Code section 1771.1(a)].
- No contractor or subcontractor may be awarded a contract for public work on a public works project unless registered with the Department of Industrial Relations pursuant to Labor Code section 1725.5.
- This project is subject to compliance monitoring and enforcement by the Department of Industrial Relations.
- The contractor shall post job site notices prescribed by regulation. (See 8 Calif. Code Reg. §16451(d)

Project Specifications

PROJECT LIMITS

Boulder Street and City Corp Yard as shown on the plans.

PROJECT DESCRIPTION

The project consists of a water main replacement and connection to existing water services within the project limits. The water main shall be placed along shoulder areas wherever possible to minimize cost of trench resurfacing. Required clearances between water and sewer mains shall be provided for. Methods of installation shall be selected by the contractor, however the methods utilized shall result in minimal or no disturbance of private landscaping, fencing and hardscaping.

CONSTRUCTION NOTES

All improvements shall be constructed in accordance with the plans and details for the project and the latest edition of Caltrans Standard Plans and Standard Specifications and the Uniform Plumbing Code.

For Trench Excavation, if there is solid rock material with a volume that exceeds 1/6cy in size that cannot be removed by standard excavating equipment (equivalent to a 20tn excavator), without drilling, ram hammering or splitting, then the Contractor shall be eligible for reimbursement of extra cost for rock removal. The Contractor shall notify City staff of the means and methods of rock removal and hourly cost for rock removal prior to the extra work being performed.

Disposal of demolished materials, debris or excess material shall be provided by the contractor at their expense. Restoration of disturbed areas with similar materials as exists prior to construction (i.e. gravel, topsoil) and repair of any damaged materials shall be provided by the contractor at their expense. Final Payment shall not be made until all cleanup and restoration work is complete.

TRAFFIC CONTOL

When work is being performed, all streets shall have one lane of traffic available for alternating traffic. At all times when work is not being performed, streets and driveways shall be safe for through traffic and pedestrians. Lane closure shall comply with the Manual on Uniform Traffic Control Devices (CA MUTCD) current edition. Notify Public Works Supt or City Engineer no fewer than two days in advance of proposed lane closure or driveway closure. The contractor shall coordinate and verify with City staff that homeowners have been provided sufficient notice of any disruption of service including water, sewer or road access.

MATERIAL NOTES

WATER LINE PIPE AND FITTINGS

Contractor shall provide and install all material necessary for the project including tubing, and pipe, horizontal and vertical elbows, short pipe pieces, corporation stops, piping connections, couplings, jointing materials, warning tape, valve box and lid, excavation, bedding and backfill. Water pipe 4" and larger shall be CL150 C900. Water pipe smaller than 4" shall be PE polyethylene water supply line. Flushing, disinfection testing and pressure testing shall be provided.

Trench backfill shall consist of sand bedding around pipe per Standard Specifications and trench zone backfill from top of sand bedding to bottom of roadway pavement section with compacted aggregate base.

WATER SERVICES

New saddles and taps will be Corporation Stops with a double brass saddle for DIP water main or double stainless steel saddle for PVC water main. Water service will be shut off and restarted by City personnel. Each shut off beyond 8 hours will result in a charge of $70 per hour with a 4hour minimum.

B-16 Water Meter boxes shall be placed and centered on water meters. Contractor shall be responsible for removal and disposal of debris, traffic control, testing, and flushing and tie-in pipe connections.

HYDRANTS

Contractor shall provide and install all material necessary for hydrant assembly under bid item for fire hydrant. A 6" valve shall be provided. Where there is no curb, two protective bollards shall be provided.

ADDITIONAL NOTES

Connect to 6" existing water main with mechanical fittings on old Ductile Iron Pipe. Diameter must be field verified.

Pipe across city yard property will be **supplied by the city**. Some rubber joints may be needed.

Maintain a slope of approximately 0.5% in the line replacement from about 0+20 to 2+83 in order for the pipe to be drained as needed.

CITY OF NEVADA CITY
BID OPENING RESULTS

PROJECT: Boulder St Waterline DATE: 1/17/2020

TIME OF BID OPENING: 10:17 A.M./P.M.

COMPANY NAME	BID AMOUNT
C&D Construction	$ 142,542 —
Hanson Bros.	$ 104,611 —
PSCE Construction	$ 82,605 —
	$
	$
	$
	$
	$
	$
	$
	$
	$

CITY OF NEVADA CITY
BID OPENING SIGN-IN SHEET

PROJECT: Boulder St. Water Line DATE: 17 Jan 2020.

TIME OF BID OPENING: 10:17 A.M./P.M.

ATTENDEES – Please Sign-in and Print your name

Signature	Print Name	Phone #
	Wm Falconi	916-765-1010
	BRYAN McALISTER	(530) 559-1326
	LOREE MCCAY	530-265-2496x134

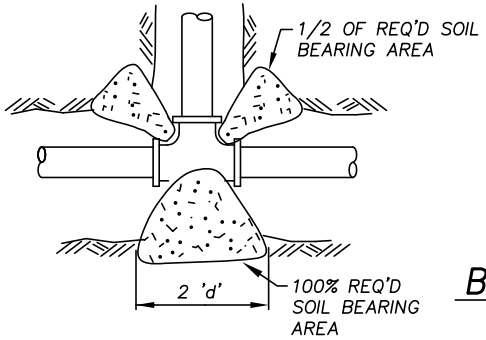

TEE – PLAN VIEW

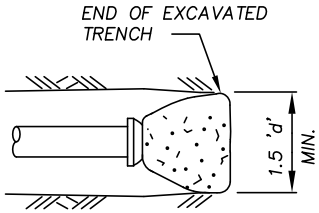

BLIND END ASSEMBLY PLAN VIEW

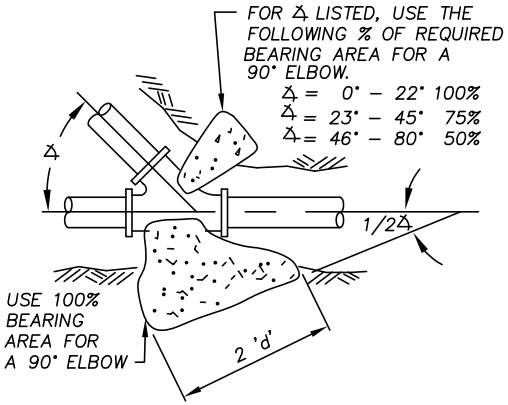

WYE – PLAN VIEW

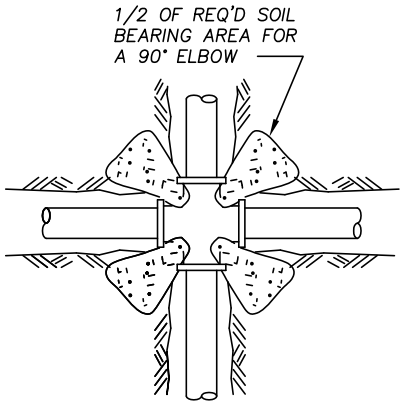

CROSS – PLAN VIEW

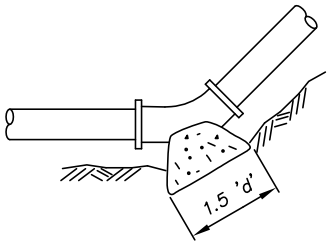

ELBOW – PLAN VIEW

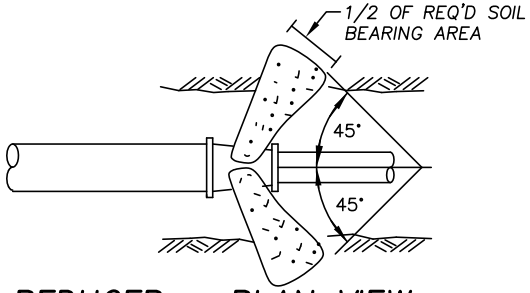

REDUCER – PLAN VIEW

NOTES:

1. MATERIALS AND INSTALLATION SHALL CONFORM TO REACTION BLOCKING FOR "WATERMAINS" IN THE SPECIFICATIONS.
2. THRUST BLOCKS SHALL BE PLACED AT ALL HORIZONTAL DEFLECTIONS IN EXCESS OF 6° AND ALL DOWNWARD VERTICAL DEFLECTIONS IN EXCESS OF 6°.
3. MAXIMUM ESTIMATED SOIL BEARING CAPACITY SHALL NOT EXCEED 2,000 P.S.F. UNLESS OTHERWISE APPROVED BY DISTRICT ENGINEER.
4. MINIMUM SOIL BEARING AREAS ARE BASED ON A WORKING PRESSURE 150 P.S.I. WITH A 1.5 SAFETY FACTOR PLUS 75 P.S.I. SURGE (TOTAL 300 P.S.I.) CALCULATION FOR BEARING AREAS FOR WORKING PRESSURE HIGHER THAN 150 P.S.I. MUST BE APPROVED BY THE DISTRICT ENGINEER.
5. CONCRETE SHALL BE PLACED BETWEEN THE FITTING AND UNDISTURBED SOIL.
6. THRUST BLOCKS SHALL BE NEATLY FORMED USING PLYWOOD OR SANDBAGS. FORMING MATERIALS SHALL BE REMOVED UPON INITIAL CURE OF CONCRETE & PRIOR TO BACKFILLING.
7. THRUST BLOCKS SHALL BE CONSTRUCTED OF 2,000 PSI CONCRETE.
8. CONCRETE SHALL NOT BE PLACED ON OR AROUND PIPE, BELLS, FLANGES OR OTHER JOINTS. IF UNAVOIDABLE, AND WITH APPROVAL OF THE DISTRICT ENGINEER, THESE AREAS SHALL BE PROTECTED WITH A DOUBLE WRAP OF 6 MIL POLYETHYLENE FILM.
9. THRUST BLOCKS PLACED ON BLIND FLANGES ADJACENT TO OTHER THRUST BLOCKS ON THE SAME FITTING SHALL BE SEPARATED FROM THE PERMANENT THRUST BLOCKS WITH A PLYWOOD DIVIDER IN ORDER TO FACILITATE ITS REMOVAL.

THRUST BLOCK SCHEDULE

PIPE SIZE 1/ 2/	MAX. SOIL BEARING CAPACITY (1,000 P.S.F.) SEE NOTE 3	REQUIRED SOIL BEARING (SQ. FT.) – SEE NOTE #4.					
		BLIND END OR TEE	ELBOW				REDUCER OR CROSS
			90°–46°	45°–23°	22 1/2°–12°	11 1/4°–6°	
4" & 6"	10	2	2	1	1	1	2
	4	3	3	2	1	1	3
	2	5	6	4	2	1	6
	1	9	12	8	4	2	12
8"	10	2	3	2	1	1	3
	4	4	6	3	2	1	9
	2	8	11	6	3	2	11
	1	16	22	12	6	3	22
10"	10	3	4	2	2	1	4
	4	6	9	5	3	2	9
	2	12	17	10	5	3	17
	1	24	34	20	10	5	34
12"	10	4	5	3	2	1	5
	4	9	12	7	3	2	12
	2	17	24	13	7	4	24
	1	34	48	26	14	7	48
SOIL DESCRIP-TION	10	HARD, SOUND SHALE					
	4	SAND & GRAVEL CEMENTED WITH CLAY–HARD TO PICK					
	2	SANDY MEDIUM CLAY – CAN BE SPADED					
	1	SOFT CLAY					

'd' = DEPTH OF SOIL BEARING SURFACE

1/ REQUIRED SOIL BEARING AREA FOR SIZES LARGER THAN 12" MUST BE APPROVED BY DISTRICT ENGINEER OR SHALL BE AS SHOWN ON THE PLANS.

2/ FOR 2" PIPE SIZE, USE 25% OF THE TABLE VALUE FOR 4".

BOARD REVIEW: 3–10–10 SD NUMBER REVISED 6–27–14

THRUST BLOCKS

NOT TO SCALE

NID SD2

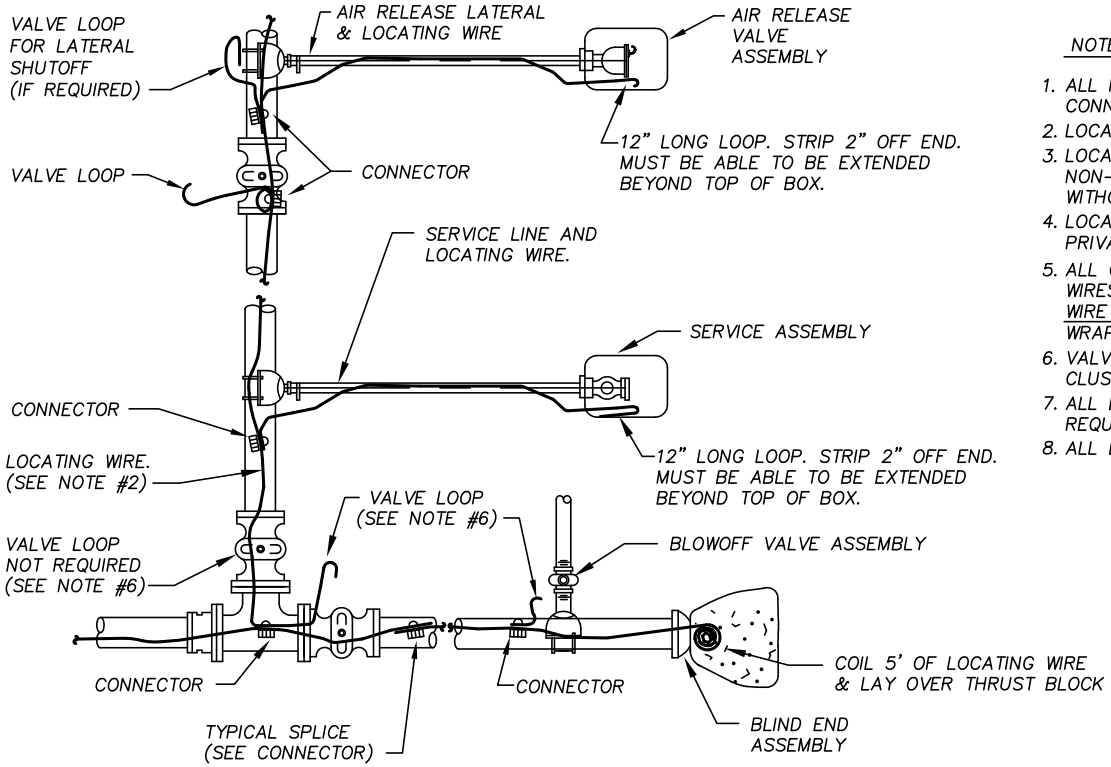

NOTES:

1. ALL MATERIALS AND INSTALLATION SHALL CONFORM TO LOCATING WIRE AND CONNECTORS FOR "WATER MAINS" IN THE SPECIFICATIONS.
2. LOCATING WIRE SHALL BE COATED 10 GAUGE SOLID COPPER.
3. LOCATING WIRE SHALL BE PLACED ABOVE AND CENTERED OVER ALL NON-METALLIC PIPE AND OVER ALL METALLIC PIPE USING 'O' RING JOINTS WITHOUT BONDING STRAPS.
4. LOCATING WIRE SHALL BE PLACED OVER ALL SERVICE LINES INCLUDING PRIVATE FIRE SERVICE LATERALS AND AIR RELEASE VALVE LATERALS.
5. ALL CONNECTORS FOR SPLICES AND OTHER CONNECTIONS TO THE LOCATING WIRES SHALL BE MADE WITH SPLIT BOLT OR PARALLEL CONNECTORS – (NO WIRE NUTS). ALL SPLICES AND CONNECTIONS AND THE CONNECTOR SHALL BE WRAPPED THOROUGHLY WITH VINYL ELECTRICAL TAPE.
6. VALVE LOOPS ARE REQUIRED FOR ONLY ONE VALVE IN A CLUSTER OF VALVES PROVIDING THEY ARE ALL WITHIN A 2' RADIUS.
7. ALL BLOWOFF VALVES AND AIR RELEASE LATERAL SHUTOFF VALVES (IF REQUIRED) SHALL BE INSTALLED WITH A LOCATING WIRE VALVE LOOP.
8. ALL LOCATING WIRE SHALL BE TESTED FOR CONTINUITY.

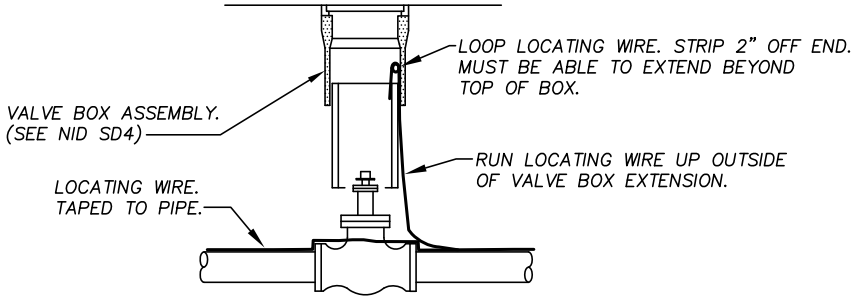

VALVE LOOP DETAIL

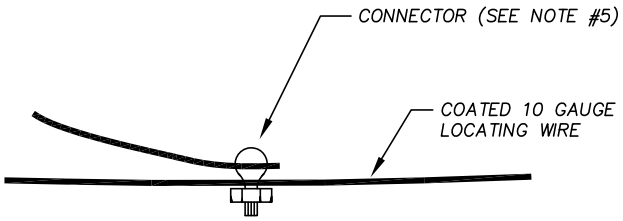

CONNECTOR DETAIL

BOARD REVIEW: 3-10-10 REVISED: 10-30-12 G.K. SD NUMBER REVISED 6-27-14

LOCATING WIRE

NOT TO SCALE

NID SD3

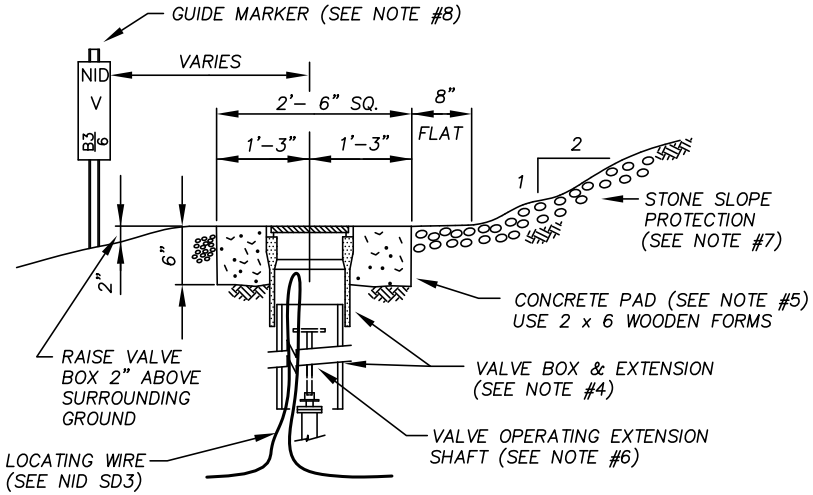

OUTSIDE ROAD ASSEMBLY

NOTES:

1. ALL MATERIALS AND INSTALLATIONS SHALL CONFORM TO "MAINLINE VALVES" IN THE SPECIFICATIONS.
2. VALVES SHALL BE OF THE TYPE ALLOWED IN THE SPECIFICATIONS.
3. JOINTS MAY BE FLANGED, MECHANICAL OR 'O' RING PUSH ON JOINTS EXCEPT WHERE SPECIFIC TYPES OF JOINTS ARE SHOWN ON THE PLANS OR DESIGNATED IN THE SPECIFICATIONS. ALL JOINTS SHALL BE PROTECTED FROM CORROSION AS REQUIRED IN THE SPECIFICATIONS.
4. VALVE BOXES SHALL BE CHRISTY G5 WITH A RATTLEPROOF CAST IRON LID MARKED "WATER". BOX EXTENSIONS SHALL BE PRECAST CONCRETE OR 8" SMOOTH WALL P.V.C. PIPE WITH MIN. SDR OF 35 AND ENDS CUT SQUARE. BOX EXTENSIONS SHALL BE CENTERED OVER THE VALVE OPERATING NUT AND CONCENTRIC WITH THE VALVE STEM.
5. VALVE BOX PADS SHALL BE 3,000 P.S.I. CONCRETE.
6. A VALVE OPERATOR EXTENSION SHAFT SHALL BE FURNISHED AND INSTALLED FOR ALL VALVES WITH OPERATING NUTS PLACED 36" OR MORE BELOW THE TOP OF THE VALVE BOX. REFER TO NID SD9.
7. PLACE STONE SLOPE PROTECTION OF NO. 3 BACKING ROCK PER CALTRANS SEC. 72, ON ALL CUT SLOPES SURROUNDING VALVE ASSEMBLIES AS DIRECTED.
8. A GUIDE MARKER SHALL BE FURNISHED AND INSTALLED AS DIRECTED. REFER TO DRAWING NID SD9.

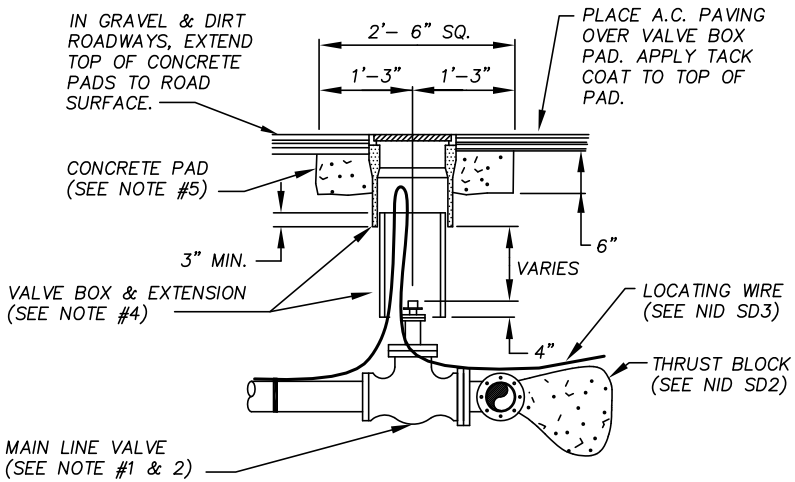

INSIDE ROAD ASSEMBLY

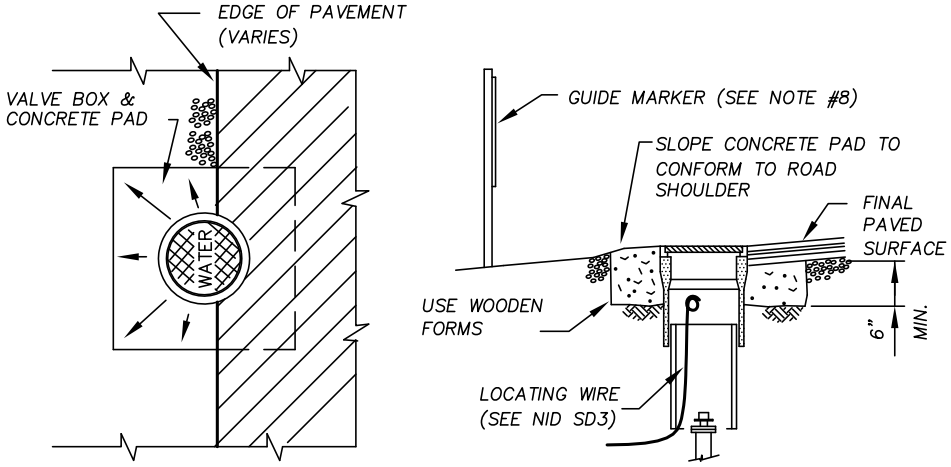

PLAN

ELEVATION

VALVE BOX IN ROAD SHOULDER

BOARD REVIEW: 3–10–10 SD NUMBER REVISED 6–27–14

MAINLINE VALVE ASSEMBLY

NOT TO SCALE

NID SD4

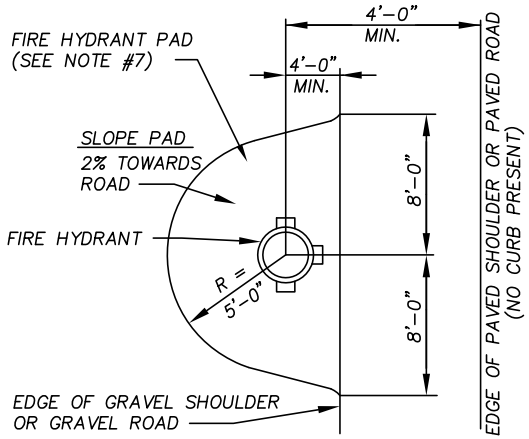

FIRE HYDRANT PAD CUT OR FILL

NOTES:

1. ALL MATERIALS AND INSTALLATION SHALL CONFORM TO "FIRE HYDRANT ASSEMBLIES" IN THE SPECIFICATIONS.
2. FIRE HYDRANTS SHALL BE AWWA C502 HAVING ONE 4½" STEAMER NOZZLE AND TWO 2½" HOSE NOZZLES WITH 250 psi RATING. THE HYDRANT MAIN VALVE OPENING SHALL BE 5¼". FIRE HYDRANTS SHALL BE ONE OF THE FOLLOWING MODELS:
   - CLOW F-2545 (MEDALLION)
   - M & H 929 (RELIANT)
   - MUELLER SUPER CENTURION 250
   - WATEROUS PACER WB-67-250
3. FIRE HYDRANT BARRELS SHALL BE EXTENDED WHERE UNAVOIDABLE IN ORDER TO MAKE PROPER GRADE. STACKING EXTENSIONS (USING MORE THAN ONE) WILL NOT BE ALLOWED.
4. FIRE HYDRANT LATERALS SHALL BE DUCTILE IRON WITH FLANGED JOINTS, RESTRAINED MECHANICAL JOINTS, OR RESTRAINED JOINTS AS REQUIRED FOR "WATER MAINS" IN THE DISTRICT'S STANDARD SPECIFICATIONS. THE LATERAL SHALL BE PROVIDED WITH POSITIVE RESTRAINT BETWEEN THE SHUTOFF VALVE AND THE FIRE HYDRANT. REFER TO DRAWING NID SD1 FOR TRENCH DETAILS.
5. WHEN POURING THE THRUST BLOCK, CARE SHALL BE TAKEN NOT TO ALLOW CONCRETE TO PLUG OR INTERFERE WITH THE HYDRANT DRAIN HOLES.
6. THE PERMEABLE BACKFILL PLACED IN THE DRAIN PIT SHALL BE COMPLETELY COVERED WITH A LAYER OF 15# FELT ROOFING PAPER OR 6 MIL POLYETHYLENE FILM.
7. THE FIRE HYDRANT PAD SHALL BE CONSTRUCTED IN ACCORDANCE WITH CALTRANS SECTION 19 "EARTHWORK" AND COMPACTED TO 95% RELATIVE COMPACTION. PAD REQUIREMENTS SHALL APPLY TO ALL FIRE HYDRANT LOCATIONS.
8. JUTE NETTING AND SEEDING ON SLOPED AREAS.
9. FIRE HYDRANT TO BE PAINTED WITH ENAMEL PAINT IN "OSHA YELLOW" ON ALL ITEMS ABOVE THE GROUND AND CONFIRMING ALL FITTINGS WILL WORK AFTER PAINTING.

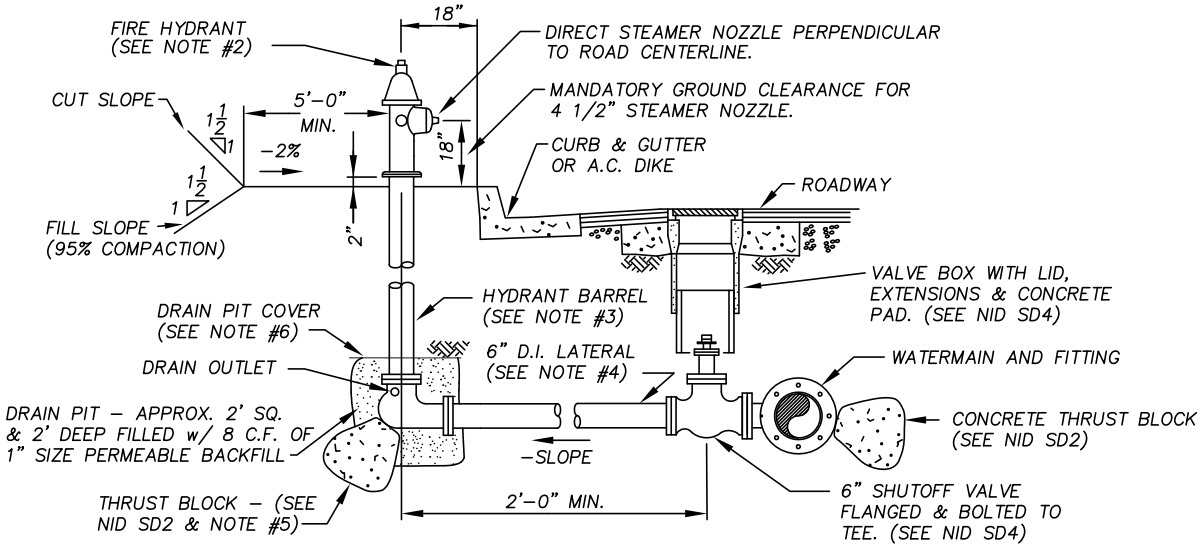

TYPICAL FIRE HYDRANT ASSEMBLY

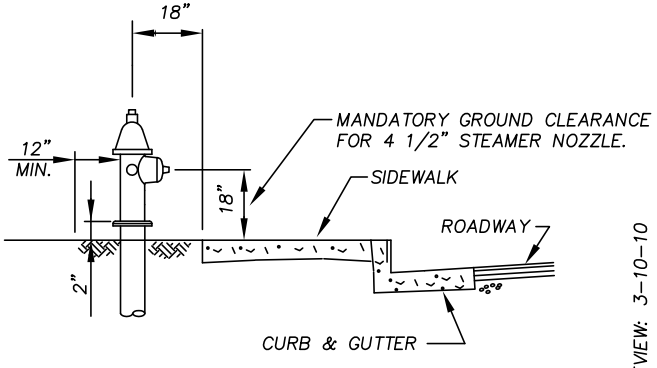

TYPICAL SIDEWALK FIRE HYDRANT LOCATION

BOARD REVIEW: 3-10-10
ADDED NOTE 9: 4-12-2016

FIRE HYDRANT ASSEMBLY

NOT TO SCALE

NID SD8

NOTES:

1. PIPE DIAMETER AS SPECIFIED ON PLANS, MINIMUM OF 4-INCH DIAMETER.
2. PRIOR TO PAINTING, GRIND SHARP EDGES THAT WILL BE EXPOSED.
3. ALTERNATE MATERIALS:
   A. SCH 40 GALVANIZED STEEL PIPE WITH 3" WIDE REFLECTIVE TAPE (TWO STRIPS PER BARRIER POST).
   B. SCH 40 GALVANIZED STEEL PIPE, EXTERIOR ETCHED AND PAINTED WITH TRAFFIC YELLOW.
   C. SCH 40 BLACK STEEL, EXTERIOR DE-GREASED, WIRE BRUSHED, PRIMED AND PAINTED WITH TRAFFIC YELLOW.
4. ALL BARRIER POSTS TO MATCH IN APPEARANCE AT ONE INSTALLATION.

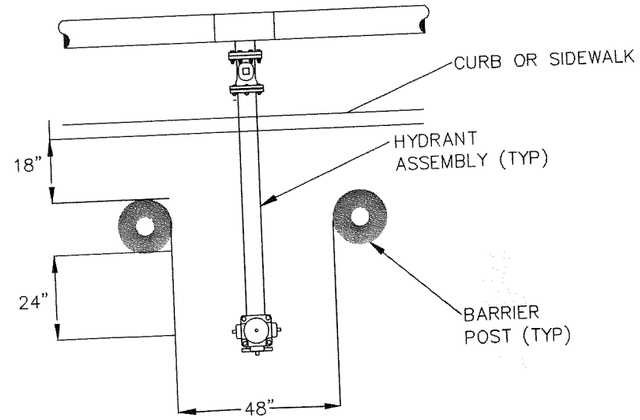

LOCATION OF PROTECTIVE BOLLARDS IN RELATION TO FIRE HYDRANT (CFC 312)

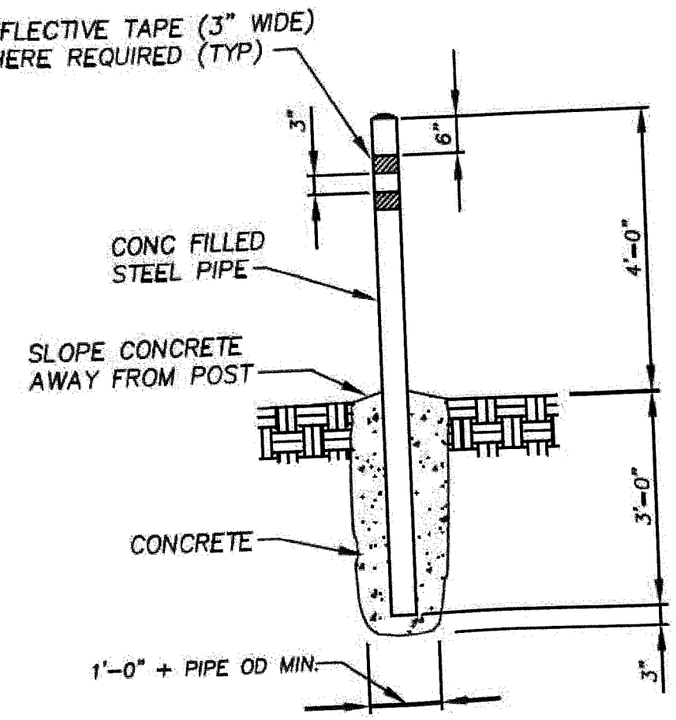

STANDARD BARRIER POST

BARRIER POST DETAIL

5

NTS

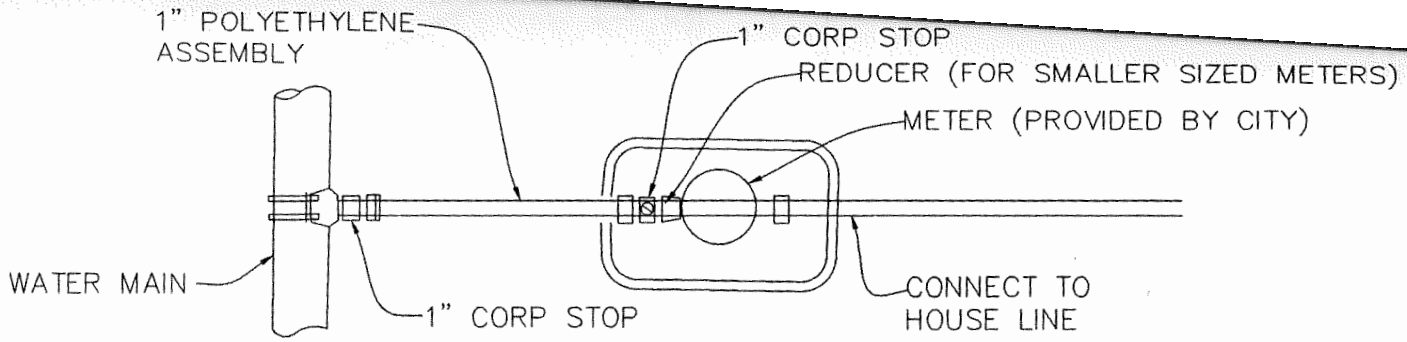

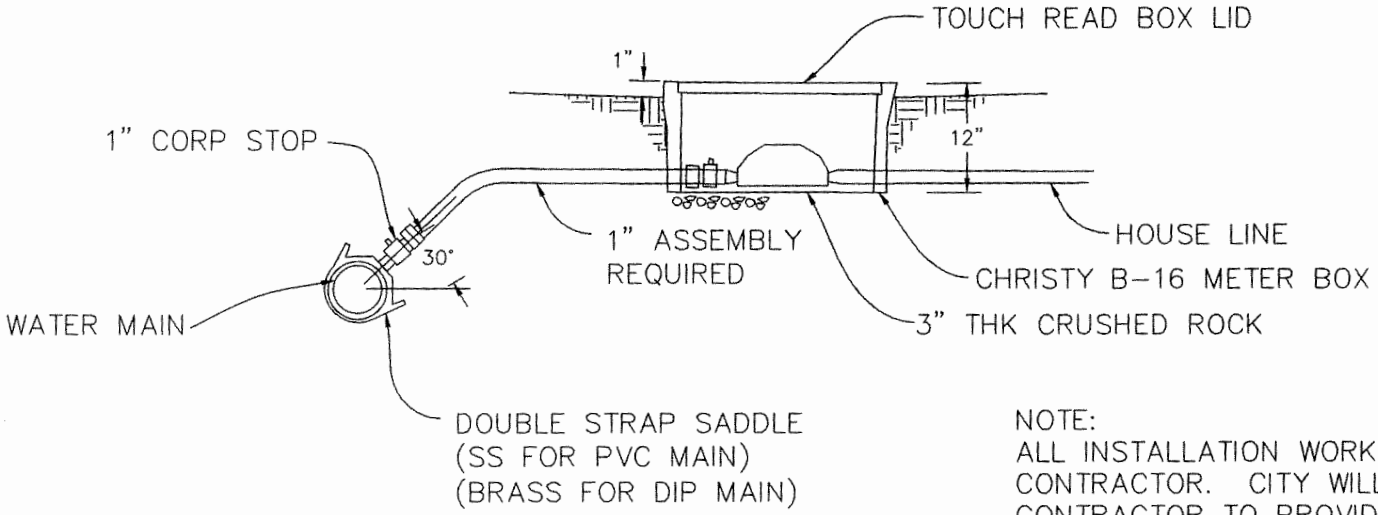

NOTE:
ALL INSTALLATION WORK PROVIDED BY CONTRACTOR. CITY WILL PROVIDE METER. CONTRACTOR TO PROVIDE ALL OTHER MATERIALS

WATER SERVICE DETAIL (FOR 1" OR SMALLER METER)

2

NTS

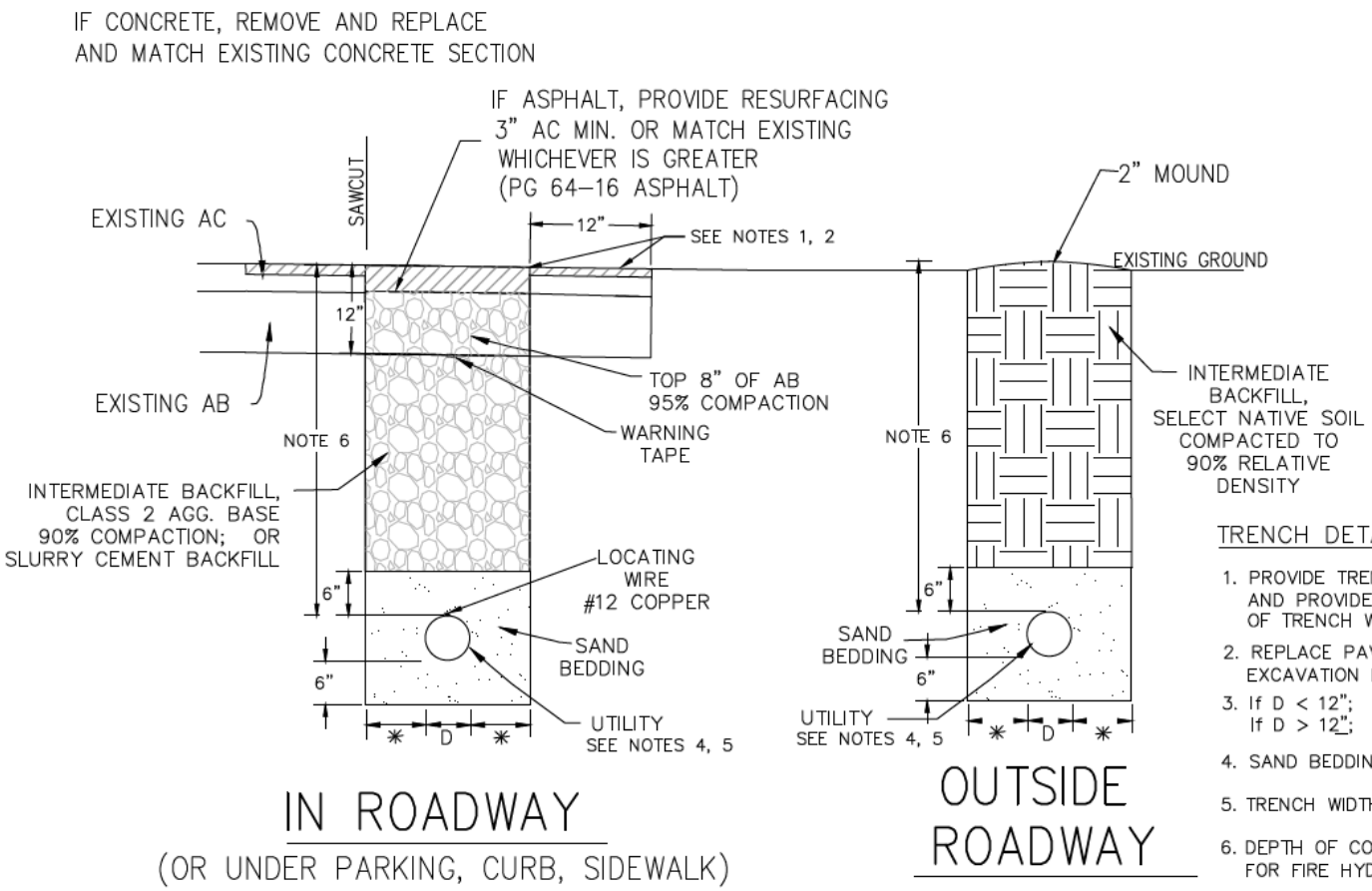

TRENCH DETAIL NOTES:

1. PROVIDE TRENCH PAVING TO A CLEAN SAWCUT EDGE AND PROVIDE 1" EDGE GRIND (TEE SECTION) 12" BEYOND EDGE OF TRENCH WHEN TRENCH IS LOCATED WITHIN EXISTING ASPHALT.
2. REPLACE PAVEMENT ALL THE WAY TO THE EDGE OF PAVEMENT, IF THE EXCAVATION IS WITHIN 3 FEET OF THE EDGE OF PAVEMENT (EP).
3. If D < 12"; *= 6" MIN.
   If D > 12"; *= 12" MIN.
4. SAND BEDDING SHALL BE SE50 (CLASS 1, NID SPEC).
5. TRENCH WIDTH FOR SERVICE LATERALS CAN BE REDUCED TO 12".
6. DEPTH OF COVER SHALL BE 30" MIN. FOR WATER MAINLINE, 30" MIN. FOR FIRE HYDRANT LATERALS AND 24" MIN. FOR SERVICE LATERALS.

1 TYPICAL TRENCH DETAIL

NTS

GENERAL NOTES:

All materials and construction shall meet the requirements of the following specifications, codes and these improvement plans. The adopted standards of the governing agency shall govern in case of conflict.

State of California, Department of Transportation, Standard Specifications (Herein called standard specifications) and Standard Plans.

California Uniform Building Code: Current Edition

California Plumbing Code: Current Edition

Nevada City Standard Specifications: Current Edition

Nevada Irrigation District Development Standards and Standard Details, Current Edition

It is the responsibility of the contractor to obtain copies of these specifications and codes and have them available at the work location at all times. The contractor shall examine and become familiar with all parts of these specifications and codes that apply to this work. In general, the applicable sections of agency specifications and the standard specifications are not repeated in these notes. It is the contractor's responsibility to construct all facilities in accordance with the applicable agency requirements and the standard specifications.

The types, locations, sizes and depths of existing underground utilities as shown on the plans were obtained from sources of varying reliability. The contractor is cautioned that only actual excavation will reveal the types, extent, sizes, locations and depths of such such underground facilities. A reasonable effort has been made to locate and delineate all known underground facilities. However, neither the owner nor the Engineer can assume any responsibility for the completeness or accuracy of the delineation of such underground facilities nor for the existence of other buried objects or facilities which may be encountered but are not shown on these plans.

The contractor is responsible for contacting the utility companies or appropriate agencies with facilities in the area, and requesting a verification at the construction site where such utilities may conflict with the placement of improvements shown on these plans.

All existing utilities shall be marked prior to beginning any excavation or trenching. Contact the Underground Service Alert at 800–642–2444 for the marking of existing utility locations.

The contractor shall immediately notify the Engineer at (530) 265–2496 X126 if there is a conflict between any existing utilities and new construction as shown on these plans.

When the contractor's operations temporarily interfere with the existing flow of sewage, water, gas, electricity, telephone communication, or the operation of any other utility, the contractor shall provide, or make arrangements for satisfactory bypass facilities.

The contractor shall request permission to interfere with said utilities by applying to the related utility and shall comply with their recommendations and ordinances in each case. Said bypass facilities shall be so constructed as to provide a noninterruptive service of said utility.

Public safety and traffic control shall be provided in accordance with City requirements and Caltrans Standards. Safe vehicular and pedestrian access shall be provided at all times during construction.

Flagmen and traffic handling devices shall be provided at the contractor expense in accordance with Manual on Uniform Traffic Control Devices, or MUTCD.

During the progress of the work, the contractor shall keep the job site in a clean and orderly condition. Excess or unsuitable material shall be removed from the job site. Spillage and trackage resulting from hauling along or across existing streets or roads shall be removed immediately by the contractor. Dust and mud control shall be provided at all times including evenings, weekends, and holidays. All existing and new drainage facilities including gutters and roadside ditches shall be kept clean and free of debris at all times including evenings, weekends, and holidays.

Any offhaul and disposal of debris from clearing, demolition of asphalt or concrete, excess pipe materials or excess dirt shall be disposed of at an authorized disposal site (not on City property) at the contractors expense.

Any grading disturbance areas on public or private property shall be restored to pre–project conditions as approved by the City Engineer.

WATER SYSTEM NOTES

1. ALL WATER SYSTEM INSTALLATIONS SHALL COMPLY WITH CITY STANDARDS. WHERE NO SPECIFICATION OR DETAIL IS PROVIDED, ALL WORK SHALL COMPLY WITH NEVADA IRRIGATION DISTRICT (NID) SPECIFICATIONS, AND STANDARD DETAILS.
2. THE WATER SYSTEM SHALL BE INSPECTED AND TESTED ACCORDING TO NID REQUIREMENTS.
3. SEWER AND WATER SEPARATION SHALL CONFORM TO THE "CRITERIA FOR THE SEPARATION WATER OF WATER MAINS AND SANITARY SEWERS" OF THE STATE OF CALIFORNIA DEPARTMENT OF HEALTH SERVICES. WATER SHALL BE PLACED ABOVE SEWER WITH 1' VERTICAL CLEARANCE WITH A FULL STICK OF PIPE 20' IN LENGTH CENTERED ON THE CROSSING.
4. ALL WATER MAINS SHALL BE PVC PIPE C900, DR18, UNLESS OTHERWISE SHOWN.

PERMITS AND NOTICES

The Contractor shall be responsible for insuring that all necessary permits have been obtained and all required notices have been given prior to commencement of work, including:

- An approved set of plans shall be available at the project site at all times during the work.
- All utility companies affected by the project shall be notified in advance of the work.
- "Underground Service Alert" (phone 800–642–2444) shall be notified at least two (2) working days in advance of any excavation.
- The Contractor shall be responsible for receiving rights–of–entry for any work done on private property or in non–public easements.
- The Contractor shall be responsible for notifying homeowners and businesses of any required shut–offs with a 48 hour notice.

BOULDER STREET
WATER LINE

Dec. 2019

1" = 20'

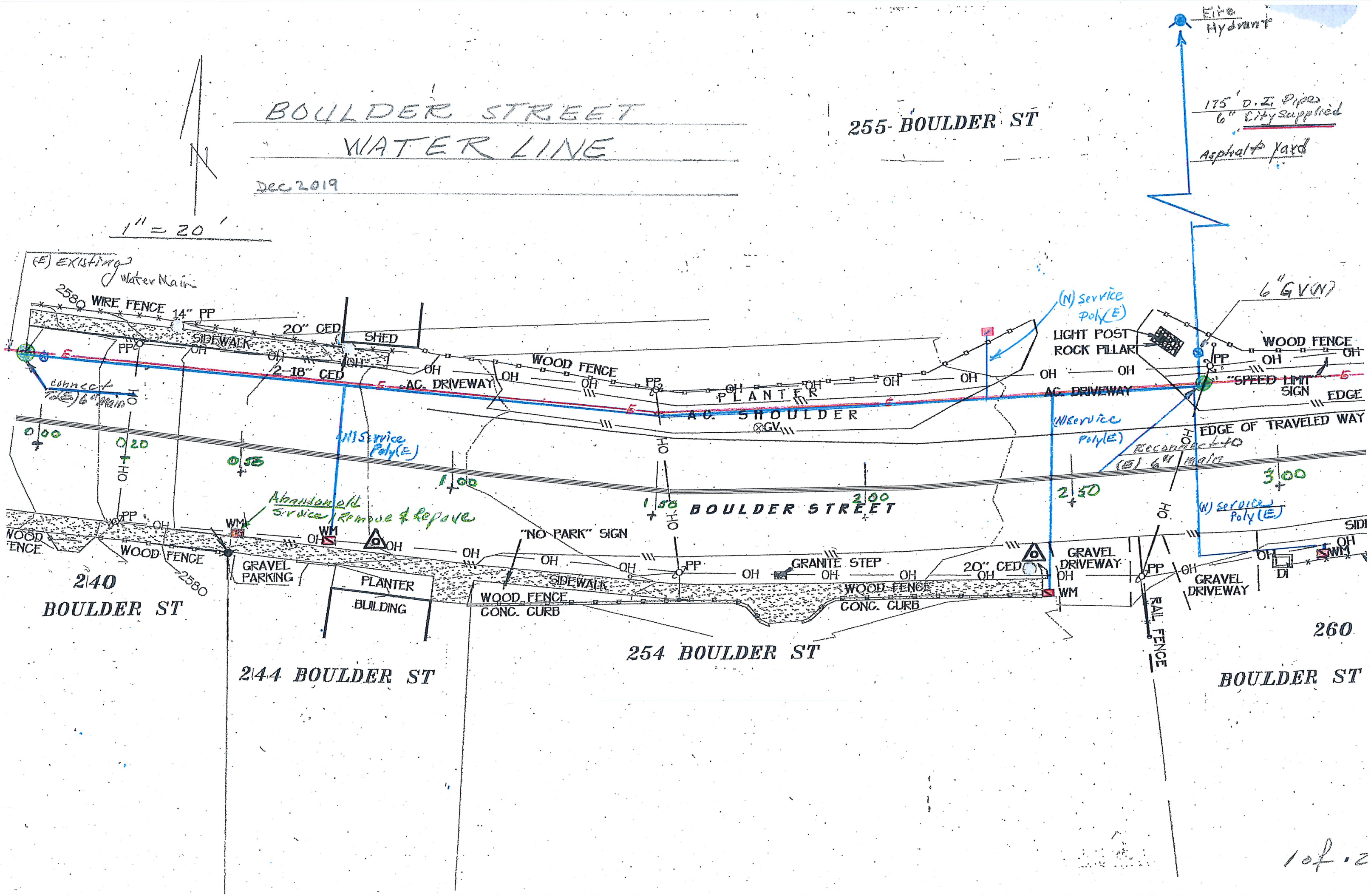

1 of 2

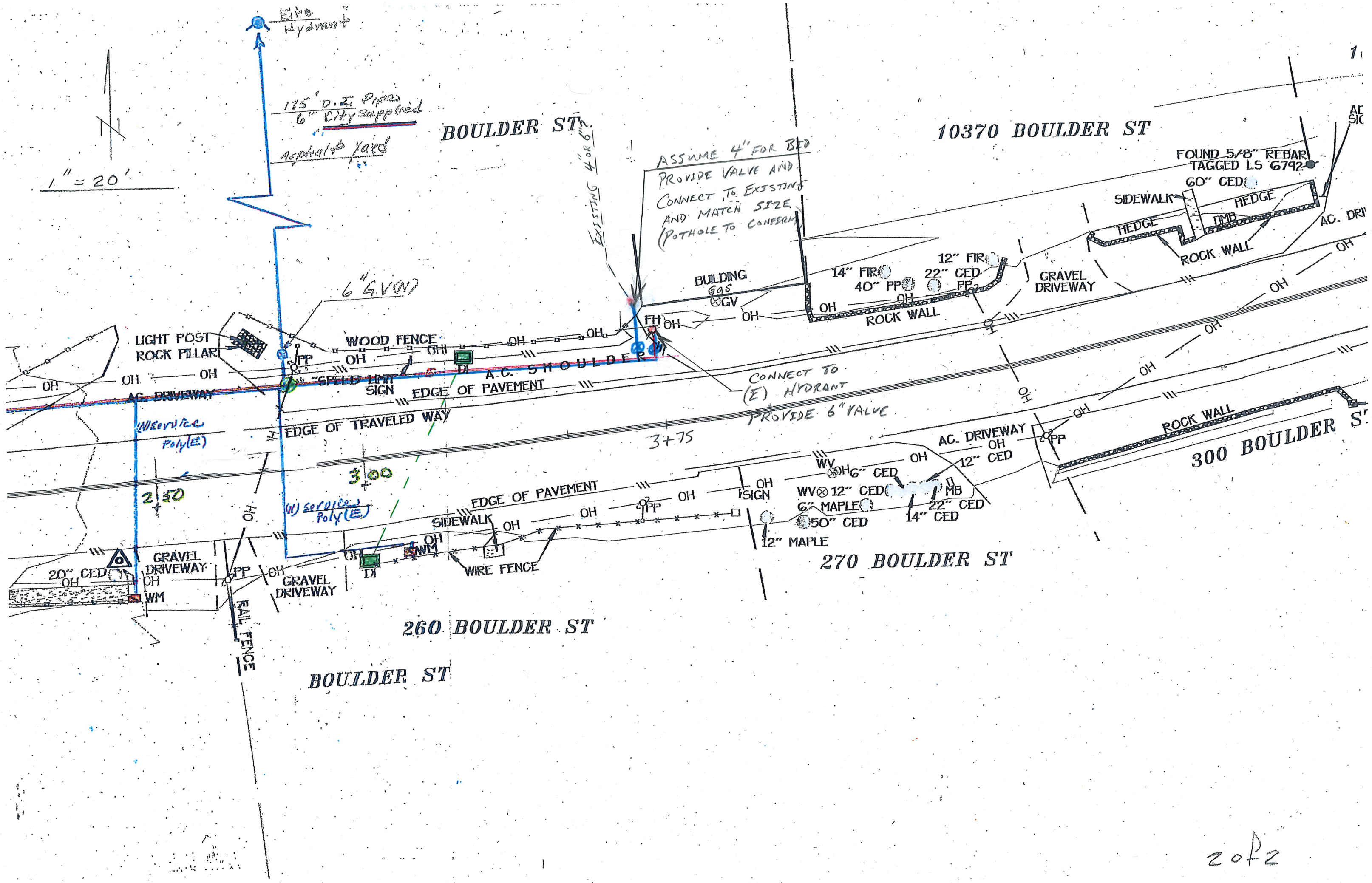
Fire Hydrant
175' D.I. Pipe
6" City Supplied
Asphalt & Yard
1" = 20'
BOULDER ST
10370 BOULDER ST
ASSUME 4" FOR BID
PROVIDE VALVE AND
CONNECT TO EXISTING
AND MATCH SIZE
(POTHOLE TO CONFIRM)
EXISTING 4" OR 6"
6" GV(?)
FOUND 5/8" REBAR
TAGGED LS 6792
60" CED
SIDEWALK
HEDGE
HEDGE
DMB
ROCK WALL
AC. DRIV
BUILDING
GAS
GV
14" FIR
40" PP
22" CED
12" FIR
PP
GRAVEL
DRIVEWAY
ROCK WALL
LIGHT POST
ROCK PILLAR
WOOD FENCE
PP
"SPEED LIMIT" SIGN
DI
A.C. SHOULDER
EDGE OF PAVEMENT
EDGE OF TRAVELED WAY
FH
CONNECT TO
(E) HYDRANT
PROVIDE 6" VALVE
AC. DRIVEWAY
(N) service
Poly(E)
3+75
3+00
2+50
(N) service
Poly(E)
AC. DRIVEWAY
12" CED
ROCK WALL
300 BOULDER ST
WV
6" CED
WV
12" CED
6" MAPLE
50" CED
MB
22" CED
14" CED
12" MAPLE
SIGN
EDGE OF PAVEMENT
SIDEWALK
PP
WM
DI
WIRE FENCE
270 BOULDER ST
20" CED
GRAVEL
DRIVEWAY
WM
PP
GRAVEL
DRIVEWAY
RAIL FENCE
260 BOULDER ST
BOULDER ST

2 of 2

REPORT TO CITY COUNCIL

City of Nevada City
317 Broad Street
Nevada City CA 95959
www.nevadacityca.gov

January 22, 2020

TITLE: Nevada Street Bridge Utility Agreements for Water and Sewer

RECOMMENDATION: Approve Utility Agreements for relocation or adjustment of water and sewer facilities for the Nevada Street Bridge replacement project and authorize the Mayor to sign on behalf of the City.

CONTACT: Bryan McAlister, City Engineer

BACKGROUND / DISCUSSION:
As part of the project to replace the Nevada Street Bridge in Nevada City, the City of Nevada City needs to execute agreements for relocation or adjustment of water and sewer facilities for the Nevada Street Bridge replacement project. Water and Sewer facilities are owned by the City so the agreements are between the City of Nevada City as LOCAL AGENCY and the City of Nevada City as UTILITY OWNER. The attached Utility Agreements No. 2010.2 and 2010.3 are prepared in accordance with procedures set forth by Caltrans who acts as the oversight agency for the US Department of Transportation Federal Highway Administration. City Staff recommends that the City Council approve the agreements and authorize the Mayor to sign to ensure that the project continues on schedule.

ENVIRONMENTAL CONSIDERATIONS:
Utility relocations for the Nevada Street Bridge replacement project were included in the Initial Study environmental review in compliance of California Environmental Quality Act (CEQA) per the Mitigated Negative Declaration adopted on January 24, 2018.

FINANCIAL CONSIDERATIONS:
Funding has been procured through the Federal Highway Bridge Replacement program (88.6% Federal participation) and Nevada City Measure S (11.4% local matching funds).

ATTACHMENT:
- ✓ Utility Agreement No. 2010.2 for relocation / adjustment of Water Facilities.
- ✓ Utility Agreement No. 2010.3 for relocation / adjustment of Sewer Facilities.

EXHIBIT 14-I LOCAL AGENCY/UTILITY OWNER SPECIAL AGREEMENT

Date:_____

_____-_____-_____ PM n / a

Project Number: ____2010_____

Federal Aid No.: ___BRLS-5018(012)

LOCAL AGENCY/UTILITY OWNER SPECIAL AGREEMENT NO. _2010.2___

The City of Nevada City proposes to replace the Nevada Street Bridge over Deer Creek on Nevada Street, in the City of Nevada City, Nevada County, California.

And: Local Agency is the Utility Owner of said utility facilities

City of Nevada City Hereinafter called "Local Agency/Utility Owner" owns and maintains Water facilities; within the limits of the LOCAL AGENCY's project that requires relocation and/or adjustment to accommodate LOCAL AGENCY's project.

WHEREAS, the LOCAL AGENCY has an approved federal aid project; and,

WHEREAS, the Local Agency/Utility Owner, owns and operates utility facilities requiring relocation/adjustment to accommodate LOCAL AGENCY's project; and,

WHEREAS, in accordance with Notice to Owner No. 2010.2 dated November 15, 2019 LOCAL AGENCY shall relocate/adjust Local Agency/Utility Owner's Water Facilities as shown on LOCAL AGENCY's contract plans for the improvement of Nevada Street which by this reference are made a part hereof; and,

WHEREAS, the Local Agency/Utility Owner's existing facilities are located in their present position pursuant to superior rights (Implied Secondary Easement), said facilities shall be relocated/adjusted at the LOCAL AGENCY's project expense; and,

WHEREAS, It is understood that said highway is a Federal aid highway and accordingly, 23 CFR, Chapter 1, Part 645 is hereby incorporated into this Agreement.

In addition, the provisions of 23 CFR 635.410, Buy America (BA), are also incorporated into this agreement. The BA requirements are further specified in Moving Ahead for Progress in the 21st Century (MAP-21), section 1518; 23 CFR 635.410 requires that all manufacturing processes have occurred in the United States for steel and iron products (including the application of coatings) installed on a project receiving funding from the FHWA.

Owner understands and acknowledges that this project is subject to the requirements of the BA law (23 U.S.C., Section 313) and applicable regulations, including 23 CFR 635.410 and FHWA guidance and will demonstrate BA compliance by collecting written certification(s) from the vendor(s) or by collecting written certification(s) from the manufacturer(s) (the mill test report (MTR).

All documents obtained to demonstrate BA compliance will be held by the OWNER for a period of three (3) years from the date the final payment was received by the OWNER and will be made available to STATE or FHWA upon request.

One set of copies of all documents obtained to demonstrate BA compliance will be attached to, and submitted with, the final invoice.

This does not include products for which waivers have been granted under 23 CFR 635.410 or other applicable provisions or excluded material cited in the Department's guidelines for the implementation of Buy America requirements for utility relocations issued on December 3, 2013.

NOW, THEREFORE, it is agreed as follows:

1. The LOCAL AGENCY agrees to perform the herein described work using its highway contractor, who will provide and furnish all necessary labor, materials, tools and equipment required therefore, and to prosecute said work diligently to completion.

2. Pursuant to Public Works Case No. 2001- 059 determination by the California Department of Industrial Relations dated October 25, 2002; work performed by Local Agency's contractor is a public work under the definition of Labor Code section 1720(a) and is therefore subject to prevailing wage requirements. Local agency shall verify compliance with this requirement in the administration of its contract referenced above.

3. The proposed relocation/adjustment of utility facilities to be performed by the highway contractor is approved. Payment for the Utility Relocation/adjustment will be vouchered through the construction program; therefore, the authorization date for this work will be the date that FHWA approves the construction project.

4. The estimated cost to the LOCAL AGENCY is $129,756

IN WITNESS WHEREOF, the parties hereto have executed this Agreement this _____ day of

_____, _____.

LOCAL AGENCY	**LOCAL AGENCY/UTILITY OWNER**
By _____	By _____
Name/Title Date	Name/Title Date

APPROVAL RECOMMENDED

By _____	By _____
Utility Coordinator Date	Utility Coordinator Date

EXHIBIT 14-I LOCAL AGENCY/UTILITY OWNER SPECIAL AGREEMENT

Date:_____

_____-_____-_____ PM n / a

Project Number: ____2010_____

Federal Aid No.: ___BRLS-5018(012)

LOCAL AGENCY/UTILITY OWNER SPECIAL AGREEMENT NO. _2010.3___

The City of Nevada City proposes to replace the Nevada Street Bridge over Deer Creek on Nevada Street, in the City of Nevada City, Nevada County, California.

And: Local Agency is the Utility Owner of said utility facilities

City of Nevada City Hereinafter called "Local Agency/Utility Owner" owns and maintains Sewer facilities; within the limits of the LOCAL AGENCY's project that requires relocation and/or adjustment to accommodate LOCAL AGENCY's project.

WHEREAS, the LOCAL AGENCY has an approved federal aid project; and,

WHEREAS, the Local Agency/Utility Owner, owns and operates utility facilities requiring relocation/adjustment to accommodate LOCAL AGENCY's project; and,

WHEREAS, in accordance with Notice to Owner No. 2010.2 dated November 15, 2019 LOCAL AGENCY shall relocate/adjust Local Agency/Utility Owner's Sewer Facilities as shown on LOCAL AGENCY's contract plans for the improvement of Nevada Street which by this reference are made a part hereof; and,

WHEREAS, the Local Agency/Utility Owner's existing facilities are located in their present position pursuant to superior rights (Implied Secondary Easement), said facilities shall be relocated/adjusted at the LOCAL AGENCY's project expense; and,

WHEREAS, It is understood that said highway is a Federal aid highway and accordingly, 23 CFR, Chapter 1, Part 645 is hereby incorporated into this Agreement.

In addition, the provisions of 23 CFR 635.410, Buy America (BA), are also incorporated into this agreement. The BA requirements are further specified in Moving Ahead for Progress in the 21st Century (MAP-21), section 1518; 23 CFR 635.410 requires that all manufacturing processes have occurred in the United States for steel and iron products (including the application of coatings) installed on a project receiving funding from the FHWA.

Owner understands and acknowledges that this project is subject to the requirements of the BA law (23 U.S.C., Section 313) and applicable regulations, including 23 CFR 635.410 and FHWA guidance and will demonstrate BA compliance by collecting written certification(s) from the vendor(s) or by collecting written certification(s) from the manufacturer(s) (the mill test report (MTR).

All documents obtained to demonstrate BA compliance will be held by the OWNER for a period of three (3) years from the date the final payment was received by the OWNER and will be made available to STATE or FHWA upon request.

One set of copies of all documents obtained to demonstrate BA compliance will be attached to, and submitted with, the final invoice.

This does not include products for which waivers have been granted under 23 CFR 635.410 or other applicable provisions or excluded material cited in the Department's guidelines for the implementation of Buy America requirements for utility relocations issued on December 3, 2013.

NOW, THEREFORE, it is agreed as follows:

1. The LOCAL AGENCY agrees to perform the herein described work using its highway contractor, who will provide and furnish all necessary labor, materials, tools and equipment required therefore, and to prosecute said work diligently to completion.

2. Pursuant to Public Works Case No. 2001- 059 determination by the California Department of Industrial Relations dated October 25, 2002; work performed by Local Agency's contractor is a public work under the definition of Labor Code section 1720(a) and is therefore subject to prevailing wage requirements. Local agency shall verify compliance with this requirement in the administration of its contract referenced above.

3. The proposed relocation/adjustment of utility facilities to be performed by the highway contractor is approved. Payment for the Utility Relocation/adjustment will be vouchered through the construction program; therefore, the authorization date for this work will be the date that FHWA approves the construction project.

4. The estimated cost to the LOCAL AGENCY is $138,083

IN WITNESS WHEREOF, the parties hereto have executed this Agreement this _____ day of

_____, _____.

LOCAL AGENCY	**LOCAL AGENCY/UTILITY OWNER**
By _____	By _____
Name/Title Date	Name/Title Date

APPROVAL RECOMMENDED

By _____	By _____
Utility Coordinator Date	Utility Coordinator Date

REPORT TO CITY COUNCIL

City of Nevada City
317 Broad Street
Nevada City CA 95959
www.nevadacityca.gov

January 22, 2020

TITLE: Action Minutes January 8, 2020 City Council Meeting

RECOMMENDATION: Review and approve City Council Meeting Action Minutes of January 8, 2020.

CONTACT: Catrina Olson, City Manager

BACKGROUND / DISCUSSION:
The action minutes for the January 8, 2020 are attached for review.

ENVIRONMENTAL CONSIDERATIONS: Not applicable.

FISCAL IMPACT: Not applicable.

ATTACHMENTS:
- ✓ City Council Meeting Action Minutes January 8, 2020

CITY OF NEVADA CITY
ACTION MINUTES
REGULAR CITY COUNCIL MEETING OF JANUARY 8, 2019

NOTE: This meeting is available to view on the City's website www.nevadacityca.gov – Go to *Quick Links* and Click on *Agendas & Minutes* and find the Archived Videos in the middle of the screen. Select the meeting date and Click on *Video* to watch the meeting. For website assistance, please contact Loree' McCay, Deputy City Clerk at (530) 265-2496, ext 134.

- **City Council Meetings are available on DVD. To order, contact City Hall - cost is $15.00 per DVD.**
- **Closed Session Meetings are not recorded.**

CLOSED SESSION – None

REGULAR MEETING – 6:30 PM - Call to Order

Roll Call: Present: Mayor Senum, Vice Mayor Minett, Council Members Parker, Moberg and Strawser

PLEDGE OF ALLEGIANCE

PROCLAMATIONS:

PRESENTATIONS: "Life Saving Award" – Police Officers Luke Holdroft and Chris Lewis

BUSINESS FROM THE FLOOR:

1. PUBLIC COMMENT (Per Government Code Section 54954.3)
Please refer to the meeting video on the City's website at www.nevadacityca.gov.

2. COUNCIL MEMBERS REQUESTED ITEMS AND COMMITTEE REPORTS:

3. CONSENT ITEMS:

A. Subject: Accounts Payable Activity Report – November 2019
Recommendation: Receive and file.

B. Subject: Fire Activity Report – November 2019
Recommendation: Receive and file.

C. Subject: Request for Additional In-Kind Sponsorship of the Wild and Scenic Film Festival
Recommendation: Approve additional request to provide in-kind sponsorship of the Wild and Scenic Film Festival January 16-19 for the use of the Veteran's Building downstairs space.

D. Subject: 1st Quarter Financial Update, Fiscal Year (FY) 19/20
Recommendation: Receive and file.

Action: Motion by Strawser, seconded by Parker to approve consent item 3A, 3B and 3D as presented. A member of the public pulled item 3C for discussion.
(Approved 5 – 0)

Action: Motion by Strawser, seconded by Parker to approve consent item 3C after discussion occurred.
(Approved 5 – 0)

4. APPROVAL OF ACTION MINUTES:

A. Subject: City Council Meeting – December 10, 2019
Action: Motion by Moberg, seconded by Strawser to approve the City Council meeting minutes of December 10, 2019 as presented.
(Approved 5 – 0)

5. DEPARTMENT REQUESTED ACTION ITEMS AND UPDATE REPORTS:

A. Subject: Nevada County Last-Mile Broadband Grant Application
Recommendation: City Council to review and consider the Nevada County Last Mile Broadband Project information provided and provide staff direction as to how the Council may or may not want to support the proposed project.
Action: No action was taken. City Council is in support of the project and directed staff to write a letter of support.

B. Subject: Monthly Update on City Council Six-Month Strategic Objectives
Recommendation: Receive and file.
Action: No action was taken, receive and file. Discussion regarding status of objectives occurred.

C. Subject: A Resolution of Application for Recreational Trail Program Grant Funds
Recommendation: Pass Resolution 2020-01, a Resolution of the City Council of the City of Nevada City, State of California, Authorizing Application for Recreational Trail Program Grant Funds and approval of the application.
Action: Motion by Strawser, seconded by Parker to pass Resolution 2020-01, a Resolution of the City Council of the City of Nevada City, State of California authorizing application for a Recreational Program Grant Funds and approval of the application.
(Approved 5 – 0)

D. Subject: Old Airport Concept Plan
Recommendation: Accept Old Airport Concept Plan and provide staff direction on next steps for development of a Master Plan for the property.
Action: Staff received direction from the City Council to move forward with a Request for Proposal (RFP) for a solar farm project prior to any more work being done on a Master Plan. Once a solar farm project is identified direction is to build the Master Plan around the solar project.

6. PUBLIC HEARINGS:

A. Subject: Ordinance for the Regulation of Accessory Dwelling Units
Recommendation: Waive reading of Ordinance, read title only and introduce for first reading, Ordinance 2020-02 to amend Section 17.72.020 through Section 17.72.038 in order to update the City's Ordinance pertaining to Accessory Dwelling Units in compliance with adopted State legislation.

1. Pass Resolution 2020-02 finding that Draft Ordinance 2020-01 is Exempt from

the California Environmental Quality Act pursuant to CEQA Guidelines Sections 15282(h), 15303, 15305 and 15061.

2. Hold first reading of Draft Ordinance 2020-01 to amend Section 17.72.020 through Section 17.72.038 in order to update the City's Ordinance pertaining to Accessory Dwelling Units in compliance with adopted State legislation.

Action: Motion by Strawser, seconded by Parker, on item number 1, to pass Resolution 2020-02 finding that draft Ordinance 2020-01 is exempt from the California Environmental Quality Act pursuant to CEQA guidelines sections 15282(h), 15303, 15305 and 15061.
(Approved 5 – 0)

Action: Motion by Strawser, seconded by Parker, on item number 2, to hold first reading of draft Ordinance 2020-01 to amend section 17.72.020 through section 17.72.038 in order to update the City's Ordinance pertaining to Accessory Dwelling Units in compliance with adopted State Regulation, including the added language of;

Occupancy until January 1, 2025, the City shall not impose an owner-occupancy requirement on any newly permitted accessory dwelling unit on a lot with a single family dwelling. After that date this prohibition shall no longer be of force and effect and, unless otherwise prohibited by state law, one of the units on the property must be occupied by the property owner. The city shall require the property owner to file a deed restriction outlining the owner-occupancy requirement. The purpose of the deed restriction is to create a perpetual notice to the new purchasers of the requirement to maintain the owner-occupancy requirement.

(Approved 5 – 0)

7. OLD BUSINESS:

A. **Subject:** Conversion of York Street and Commercial Street to One-Way Streets
Recommendation: Provide staff direction to implement permanent posting of one-way streets at York Street (between Broad and Commercial) and Commercial Street (between Main and Broad).

Action: There was consensus amongst all of the City Council to implement permanent posting of one-way streets at York Street (between Broad Street and Commercial Street) and Commercial Street (between Main Street and Broad Street

8. NEW BUSINESS:

A. **Subject:** Feasibility Study for One-Way at Clark Street
Recommendation: Provide direction to City staff to perform a feasibility study for one-way at Clark Street.

Action: After public input, the City Council directed staff to perform a study on best next steps to improve the safety at Clark Street (considering different options, not just one-way).

B. **Subject:** Critical Matters Related to the PG&E Bankruptcy
Recommendation: City Council to review and consider the proposal from the City of San Jose Mayor Sam Liccardo and over 50 local elected officials from PG&E's service area to restructure PG&E from an investor-led company one that is customer-owned and to provide staff direction as to how the Council may or may not want to support this proposal.

Action: The City Council reviewed the proposal from the City of San Jose Mayor, Sam Liccardo and over 50 local elected officials from PG&E's service are to restructure from an investor-led company to one that is customer-owned. The City Council directed staff to prepare a letter and

bring back for review and authorization for the Mayor to sign.

C. **Subject:** Appeal of Planning Commission Decision to Deny an Architectural Review Application by John Conger for 224 Church Street
Recommendation: After holding a Public Hearing, Council shall make a decision whether to uphold, overturn or modify the Planning Commission decision to deny the Architectural Review Application.

Action: The City Council held a Public Hearing and made the decision to overturn the denial of the Planning Commission decision to deny the Architectural Review Application.
(Approved 4 – 0, Opposed 1)

9. CORRESPONDENCE:

10. ANNOUNCEMENTS:

11. CITY MANAGER'S REPORT: The City Manager provided a written report that was attached to the agenda packet.

12. ADJOURNMENT: - 12:07AM

AYES:

NOES:

ABSTAIN:

ABSENT:

ATTEST:

_____
Reinette Senum, Mayor

_____
Niel Locke, City Clerk

REPORT TO CITY COUNCIL

City of Nevada City
317 Broad Street
Nevada City CA 95959
www.nevadacityca.gov

January 22, 2020

TITLE: California Resilience Program, Request for Proposals, 2020 Grant Program

RECOMMENDATION: The City Council to review the attached California Resilience 2020 Grant Program and determine if the City of Nevada City desires to submit a request for proposal and authorize the Sierra Fund to write the grant.

CONTACT: Catrina Olson, City Manager

BACKGROUND/DISCUSSION:
Reinette Senum, Nevada City Mayor met with members of the Sierra Fund and several other non-profits to discuss and review the California Resilience Grant Program. A request was made by the Mayor and the Sierra Fund that this item be added to the January 22, 2020 agenda for Council to review for potential submission of a grant proposal to be written by the Sierra Fund. The following is a summary description of the overall grant program:

Project Description:
The Bay Area Council issued an RFP Dec 2, 2019 to fund climate resilience planning grants. The planning grant could be used to implement fire safety goals and objectives that the Firewise groups are proposing be added into the upcoming Strategic Plan that will be reviewed for consideration at the February 10, 2020 Planning Session. The planning grant could fund an assessment of City-owned property needs, the development of a Comprehensive Vegetation Management Plan for City-owned properties, as well as a long term funding strategy for ongoing maintenance of City-owned properties. The City would be the applicant and would form an agreement with The Sierra Fund to administer the grant if awarded.

Opportunity: *The California Resilience Challenge is a statewide effort, led by businesses, utilities and a diverse range of partners, to build local and regional climate resilience and to support a shared vision for a resilient California in the face of increasing climate threats. The Challenge is providing grants for diverse, replicable and innovative climate change adaptation planning projects across California. These projects will reflect California's diverse geography and showcase leadership in climate change adaptation. The California resilience Challenge is an initiative of the Bay Area Council Foundation.*

Funding Priorities:
Eligible projects will consist of planning projects that are targeted at improving local or regional resilience to one or more of the following four climate challenges:

- *Drought*
- *Flooding*
- *Extreme heat*
- *Wildfire*

Timeline:

- *Proposal due February 7th 2020*

- *Awards Announced in April 2020*
- *Projects commence on or before Dec 31, 2020 and completed by Dec 31, 2022 (two year funding)*

Specifications and Constraints:

- *$100-200K*
- *Government Agency must be the applicant, collaboration with nonprofits are welcomed*
- *Proposals should include letters of support from the applicant's lead and supporting departments, and from project partners and local community organizations*

Full RFP: https://www.bayareacouncil.org/storm-flood-protection/california-resilience-challenge-announces-statewide-competition-for-climate-adaptation-projects/
For more information contact Carrie Monohan, carrie.monohan@sierrafund.org

ENVIRONMENTAL CONSIDERATIONS: None.

FINANCIAL CONSIDERATIONS: None.

ATTACHMENT:

- ✓ California Resilience Grant Program

California Resilience Challenge

Request for Proposals, 2020 Grant Program

December 2, 2019 - Application Deadline 5pm, February 7, 2020

CALIFORNIA
RESILIENCE
CHALLENGE

CALIFORNIA RESILIENCE CHALLENGE LEADERSHIP

Board of Directors

JPMORGAN CHASE & CO.

EDISON INTERNATIONAL®
Energy for What's Ahead℠

THE METROPOLITAN WATER DISTRICT OF SOUTHERN CALIFORNIA

RESOURCES LEGACY FUND®
CREATIVE SOLUTIONS. LASTING R

PG&E®

Valley Water
Clean Water • Healthy Environment • Flood Protection

Additional Sponsors

Alaska AIRLINES
Official airline sponsor

pillsbury

San Francisco Water Power Sewer
Services of the San Francisco Public Utilities Commission

Advisory Committee

AECOM

Ceres
Sustainability is the bottom line.

Climate Resolve

EDF ENVIRONMENTAL DEFENSE FUND
Finding the ways that work

The Nature Conservancy

pillsbury

Administration

BAYAREA COUNCIL

Table of Contents

1. Background..... 4
2. About the California Resilience Challenge..... 5
3. Request for Proposals..... 5
4. Eligibility..... 5
5. Support and Other Funding..... 6
6. Evaluation Criteria..... 6
7. Grant Process..... 8
8. Grant Terms..... 9
9. Grant Disbursement and Accounting..... 11
10. Proposal Contents..... 11
11. Submittal Instructions..... 13
12. Contacts and Additional Information..... 13
13. Tools and Resources..... 13

1. Background

Climate change is forcing communities across California to become more resilient to drought, flood, wildfire, extreme heat, and rising seas. Climate resilience aims to anticipate and prepare for impacts to reduce the damage from extreme weather events, as well as chronic, long-term shifts, including those resulting from or aggravated by climate change. Taking steps today to adapt to climate change will yield significant future benefits for public health, safety, infrastructure, the economy, and the environment. However, California lacks dedicated funding for comprehensive, statewide climate adaptation planning. California's extraordinary geographic, economic, environmental and cultural diversity calls for an equally diverse array of climate adaptation projects that can serve as a model for countries around the world.

Senate Bill (SB) 379, enacted in 2015, requires cities and counties to incorporate climate adaptation and resiliency strategies into their general plans. Specifically, SB 379 requires general plans to include the following features:

- A vulnerability assessment identifying risks climate change poses to the local government and the geographic areas at risk from climate change impacts.
- A set of adaptation and resilience goals, policies and objectives.
- A set of feasible implementation measures designed to carry out the goals, policies and objectives, including feasible methods to avoid or minimize climate change impacts associated with new land uses and the location of new essential public facilities outside of at-risk areas.

SB 246 (2015, Wieckowski) directs the Governor's Office of Planning and Research (OPR) to establish an Integrated Climate Adaptation and Resiliency Program to coordinate regional and local adaptation efforts with state climate adaptation strategies. SB 1000 (2016, Leyva) further tasks municipalities, when updating their general plans, to include an environmental justice element identifying objectives and policies to reduce the unique health risks in disadvantaged communities, including pollution reduction, air quality improvement, and the promotion of public facilities. The Governor's Office of Emergency Services (CalOES) may offer financial resources to prevent or lessen impacts from climate change.

To complement these and other climate change resilience planning efforts, the California Resilience Challenge is providing funding by means of its 2020 Grant Program for eligible resiliency planning projects aimed at improving local resilience to climate impacts, including drought, flooding (including sea level rise), extreme heat, and wildfire. Selected plans will be innovative and replicable for other locations, will help protect critical infrastructure and vulnerable communities, and will enjoy broad community support. A key goal of the California Resilience Challenge is to support a diversity of projects in terms of scale, type, and readiness with a focus on supporting planning projects that could fast track implementation.

2. About the California Resilience Challenge

The California Resilience Challenge is a statewide effort, led by businesses, utilities, and a diverse range of partners, to build local and regional climate resilience and to support a shared vision for a resilient California in the face of increasing climate threats. The Challenge is providing grants for diverse, replicable and innovative climate change adaptation planning projects across California. These projects will reflect California's diverse geography and showcase leadership in climate change adaptation.

The California Resilience Challenge is an initiative of the Bay Area Council Foundation, a nonprofit corporation, qualified as a tax-exempt organization under section 501(c)(3) of the Internal Revenue Code. The Challenge is administered by the Bay Area Council, a business-sponsored public policy advocacy organization for the nine-county Bay Area that was founded in 1945. Learn more at bayareacouncil.org.

The California Resilience Challenge has a Grant Fund in excess of $2 million. The sources of the Grant Fund include businesses, utilities, nongovernmental organizations, and foundations. Donors to the Grant Fund are identified at ResilientCal.org/leadership.

3. Request for Proposals

California Resilience Challenge (CRC) is pleased to invite eligible local California public entities to respond to this Request for Proposals (RFP) for grants in support of climate resilience planning projects, with a preference for projects that will lead to implementation of resiliency infrastructure. (See definitions in Section 6.) Selected proposals will be for specific planning projects that will commence on or before December 31, 2020 and are to be completed by December 31, 2022. It is CRC's expectation that individual grants will be awarded for between $100,000 and $200,000, but CRC reserves the right to make smaller or larger grants, and the right to award less than the maximum amount of its Grant Fund.

4. Eligibility

Local California public entities are eligible to apply for a CRC grant. Eligible entities consist of the following:

- California incorporated cities, whether or not charter cities
- California counties
- Local agencies and districts at the county level
- Joint Powers Authorities CABY-JPA
- Special Districts such as, but not limited to, Geologic Hazard and Abatement Districts, Community Facilities Districts, Utility Districts and others

YWA lead
TSF sponser fiscal
– ask BYLT to be on
– ask NID to be on
Advisory Council

- California Native American Tribes[1]
- Metropolitan Planning Organizations (MPOs)
- Councils of Governments (COGs)

- NID
- YWA
- COPNC

Collaborations between public entities and non-profits are welcomed, but a lead agency should be clearly identified.

State-level entities, including the State of California and its departments, commissions and agencies, interstate compact entities, are not eligible for this program focused on local efforts. not SNC

5. Support and Other Funding

CRC may make grants that would provide the required match funding to release other funding or grant opportunities. CRC wishes to fund viable projects. If additional funding is needed in addition to the CRC funding for the project to be executed, details must be provided including the likely timescale for securing the additional funding. Proposals should include letters of support from the applicant's lead (and supporting) department(s), and from project partners and local community organizations.

6. Evaluation Criteria

Eligible Projects
Eligible projects will consist of planning projects that are targeted at improving local or regional resilience to one or more of the following four climate challenges:

- Drought
- Flooding, including from sea level rise
- Extreme heat
- Wildfire

Project Evaluation Criteria
Competitive grants will address as many of the following criteria as possible, although it is understood that it is unlikely that a project would be able to address all:

- Is the resilience planning effort integrated with or can fast track project implementation/ delivery?

- Does the project enjoy community support from elected officials, neighborhood associations, business and civil leadership organizations, environmental advocacy and environmental justice groups, etc.?

---

[1] "California Native American tribe" means a Native American tribe located in California that is on the contact list maintained by the Native American Heritage Commission for the purposes of Chapter 905 of the Statutes of 2004.

- Will the project help protect critical infrastructure?
- Will the project benefit disadvantaged or vulnerable communities, and will it help build or support leadership in those communities?
- Does the project achieve multiple benefits across sectors (e.g., public health and safety is enhanced while also improving environmental conditions)?
- Can the project leverage other sources of private, local, state or federal funding?
- Can the project be scaled to provide increased resilience in the future?
- Can the project can be replicated in other geographies?
- Does the project involve collaboration with neighboring jurisdictions?
- Does the project involve collaboration with the private sector?
- Does the project incorporate greenhouse gas emission reduction measures?

CRC encourages those public entities that have not yet progressed resilience planning in their jurisdiction to apply, as well as those who are further ahead.

Eligible Project Examples
The examples below are provided to illustrate the range of projects eligible for funding. They are not meant to be exhaustive and are listed in no particular order. Note that while there is a preference for CRC to fund planning projects designed for implementation of resilience infrastructure, the CRC is looking to fund a range of project types which may be earlier in the adaptation planning cycle.

- Infrastructure adaptation and resilience plans, including "green" or nature-based infrastructure planning.
- Additional modeling or feasibility studies to help fill knowledge gaps about vulnerabilities and/or costs and benefits; for example, a study to understand the impact of sea level rise on rising groundwater, or the combined impact of increased precipitation and sea level rise.
- Hazard mitigation plan updates coupled with deeper planning around some specific adaptation solutions.
- Climate vulnerability assessments.
- Integration of climate resilience planning considerations and strategies into existing plans, such as Local Coastal Programs and General Plans, including efforts to meet requirements of SB 379.
- Projects that enable, deepen or extend inclusive and equitable community participation in existing or new projects.

Eligible Activities and Expenses
Activities eligible for funding are those related to climate resilience planning. The focus of CRC is on use of its grants to leverage planning efforts across the state.

Examples of eligible activities include:

- Feasibility studies
- Public consultation, planning, and economic analysis
- Funding/financing analysis
- Conceptual drawings and design
- Data and geospatial analysis

Examples of eligible expenses include:

- Staff time
- Consultant time
- Community/stakeholder meetings and advisory groups (e.g. stipends, catering)
- Project-specific staffing
- Travel costs

Ineligible Activities

- The following activities are **not** eligible for CRC grants:
    - Projects not related to climate resilience planning.
    - Projects that do not improve local resilience against at least one of the four climate challenges: drought, flooding (including sea level rise), extreme heat and wildfire.
    - Projects that may inadvertently cause maladaptation or increase GHG emissions.
    - Engineering plans and design specification work.
    - Construction projects or capital costs, such as the building of a facility.

7. Grant Process

The following is an overview of the grant proposal evaluation process, including financial, contracting, subcontracting and legal requirements pertaining to the CRC 2020 Grant Program. Applicants are encouraged to review the contents of this section when developing their proposals.

Upon award of grant funds, grantees will receive more specific guidance, and will acknowledge and agree to comply with the terms of this RFP.

Application Review Process

All proposals submitted for the CRC 2020 Grant Program will be reviewed by the CRC Advisory Committee and administrative staff, who will review applications for eligibility, content, submission of proper documentation, meeting technical requirements, overall relationship to statewide planning efforts, and compliance with state planning requirements. Applications will be evaluated based on how well they describe the project, justify the need for the project and for the CRC funding, reflect the program evaluation criteria, and articulate a concrete scope of work and project timeline. Advisory Committee recommendations will be presented to the CRC Board for their consideration. The CRC Board will make a final determination on all grants in the Spring of 2020.

RFP Timeline:

- **December 2, 2019:** RFP opens
- **February 7, 2020**: RFP closes
- **February and March 2020:** Proposals reviewed and evaluated
- **April 2020:** Grant awards announced

8. Grant Terms

Project Start Date
The project must commence on or before December 31, 2020.

Project Timeline
Applicants must provide a timeline that outlines key tasks by month at a minimum (see Proposal Submittal Section).

Completion Date
All grant funds from CRC must be used to pay or defray project expenditures on or before December 31, 2022, and the project must be planned to be complete on or before December 31, 2022.

Case Study
CRC is looking to identify and share the lessons learned from this grant opportunity to inform other existing or new state grant programs. To this end, all grant recipients will prepare a short case study describing the project process, and completed project outcomes including maps, photos, drawings, etc. (as appropriate for the project type). A template will be provided (Word and PowerPoint).

Case studies should emphasize processes, or results that can be adapted or replicated for use in various parts of the state, as well as documentation of the involvement of disadvantaged

communities throughout the entire planning process, and any other lessons learned. These studies will be used to develop guidance for future resiliency and adaptation projects in the state.

Case study reports and presentation materials must be completed and delivered no later than three months after the completion of expenditure of CRC funds. Final case studies will be submitted to the Governor's Office of Planning and Research for possible inclusion in the Adaptation Clearinghouse.

Work Product
All reports funded through the CRC Grant Program shall credit CRC financial participation on the cover or title page. An electronic copy of all final reports shall be forwarded to CRC.

Any reports or presentation materials funded through the CRC Grant Program are in the public domain and may not be copyrighted, sold, or used exclusively by any business, organization, or agency. Applicants must not transmit any material to CRC that the applicant considers to be confidential or proprietary. Any material the applicant transmits to CRC will be considered non-confidential and non-proprietary. This policy serves to avoid potential misunderstandings or disputes regarding ownership of ideas. To the extent that the applicant owns or controls any patent rights, copyright rights, trade secret rights, or any other intellectual property or proprietary rights that may be required for access to work product submitted under the CRC Grant Program, the applicant grants a license to such rights to any person accessing and using such work product. CRC reserves a royalty-free, non-exclusive, and irrevocable license to reproduce, publish, or otherwise use and to authorize others to use the reports for public purposes.

Third-Party Contracts
The agreements between a grantee and a sub-recipient, consultant, or sub-consultant are referred to as "third-party contracts." Grantees will be expected to use and comply with their individual procurement procedures in awarding third-party contracts. Work for which a CRC grant is provided can only be contracted if it has been stated in the applicant's Scope of Work and Project Timeline.

Grantees are fully responsible for all work performed by their sub-recipients, consultants or sub-consultants, and CRC shall not be liable to any of such entities for the performance by grantees. Grantees are responsible to ensure that all third-party contractors adhere to the provisions of this RFP.

Grant Disbursement and Accounting
CRC intends to disburse funds from a grant under the 2020 Grant Program in installments. The amount and timing of each installment, and the process for invoicing and disbursement, shall be determined by CRC in its sole discretion. The final disbursement shall be conditioned on a certificate by an authorized representative of the grantee certifying compliance with the terms of this RFP and verifying that the CRC funds have been or will be used for project expenditures reasonably incurred and required for project purposes. Each grantee shall also make financial reports, within 90 days after the end of each of its fiscal years, during the progress of the project and upon project completion, and provide reasonable evidence of project progress and project sources and uses of funds.

Each grantee shall maintain true and complete records of performance of work on the project and of the sources and uses of funds for such project, and shall maintain such records for a period of not less than 3 years after the later of completion of the project or the last disbursement by CRC.

CRC and its representatives may access such records on reasonable notice and during regular business hours for the purpose of confirming the grantee's compliance with the terms of this RFP.

9. Grant Disbursement and Accounting

CRC intends to disburse funds from a grant under the 2020 Grant Program in installments. The amount and timing of each installment, and the process for invoicing and disbursement, shall be determined by CRC in its sole discretion. The final disbursement shall be conditioned on a certificate by an authorized representative of the grantee certifying compliance with the terms of this RFP and verifying that the CRC funds have been or will be used for project expenditures reasonably incurred and required for project purposes. Each grantee shall also make financial reports, within 90 days after the end of each of its fiscal years, during the progress of the project and upon project completion, and provide reasonable evidence of project progress and project sources and uses of funds.

Each grantee shall maintain true and complete records of performance of work on the project and of the sources and uses of funds for such project, and shall maintain such records for a period of not less than 3 years after the later of completion of the project or the last disbursement by CRC. CRC and its representatives may access such records on reasonable notice and during regular business hours for the purpose of confirming the grantee's compliance with the terms of this RFP.

10. Proposal Contents

This section provides applicants with information regarding submittal of proposals for grants of funds from the CRC 2020 Grant Program.

Application Information
Applicants should present their proposal in Microsoft Word format using 12-point Times New Roman font or Microsoft Excel format. Proposals should include the following information:

Project Summary Description	Provide a brief (approximately 500-word) summary description of the project, the agencies involved, the project start/end dates, the general project planning area, and why the project is necessary. The proposal should identify a lead agency with primary responsibility for the project. If the project is part of a larger effort, please describe how the CRC-funded project would fit in, and provide the total budget of the overall project.
Grant Amount Requested	State maximum amount of grant that the applicant is seeking. CRC expects grants to be issued in quantities between **$100,000** and **$200,000,** but reserves the right to make smaller or greater grants.

Description of Resilience Challenges Project Addresses	Demonstrate that the planning efforts for which funding is sought are targeted at improving local or regional resilience to one or more of the following four climate challenges: •Drought •Flooding, including from sea level rise •Extreme heat •Wildfire If known, please describe the projected impacts by timeframe proposed for the project (e.g. increase in extreme heat days expected by 2050)
Other Project Eligibility Criteria	Applicants should also describe how the project responds to the criteria listed in section 6.
State Law Requirements	Is the proposed project mandated by state law? If so, explain how grant funds will extend or improve outcomes.
Scope of Work	Provide a detailed Scope of Work by task. This preferably should be detailed enough that it can be used to hire an external consultant or guide internal staff without further reworking (for the sake of efficiency).
Project Timeline	Provide a detailed proposed project timeline (preferably by month). Identify anticipated start and end dates, planning milestones, and dates when released funds would be required.
Local Support and Approvals	List entity departments and partners that support the project (and attach copies of available letters of support). Identify Planning Commission, City Council, Board of Supervisors, or other responsible body support that will be needed to proceed with projects that may be developed through the grant (letters of support not required).
Other Sources of Funds	Provide details if a potential CRC grant would provide the required match funding to release other funding or grant opportunities. Provide details of any additional funding that must be secured (in addition to the CRC funding) for the project to be executed. Describe project activities that will be funded in whole or in part by other funding sources. If there are in-kind contributions, state the basis for valuing such contributions.
Uses of Funds	Provide a budget summary, including the following major line items: Staff hours (salaries and benefits); professional service firms (lump sum per task); travel; and other costs. Distinguish between direct and overhead costs.
Deliverables	Describe the final products that will be produced at the successful completion of the project. A financing plan for a resiliency infrastructure project (such as government incentives, developer financing, third-party financing, public support, bond proceeds, issuance of new bonds) is a desired deliverable for infrastructure-focused planning projects (including those that are nature-based).
Access to Site	If access to private property is necessary for project planning efforts, describe plan for permission to conduct planning activities.

11. Submittal Instructions

All grant proposals are required to be submitted via e-mail. An applicant may only submit one application package per e-mail. The required information outlined above must be attached to the e-mail, in Word or Excel documents.

Please submit your application package to resilience@bayareacouncil.org with "Resilience Proposal" in the subject line. Applications must be submitted via e-mail no later than February 7, 2020 by 5:00 pm. Hard copies will not be accepted, and late applications will not be reviewed.

12. Contacts and Additional Information

General Questions:
Adrian Covert, Vice President of Public Policy, Bay Area Council: resilience@bayareacouncil.org

Technical questions on project-specific aspects, from applicants that have limited experience in resilience project planning, may be directed by Adrian Covert for responses by representatives of AECOM.

Conference Call:
A call to discuss expectations for RFP and Q&A will be held on Friday, December 13 at 10am. Details and RSVP at https://www.eventbrite.com/e/california-resilience-challenge-rfp-walk-through-tickets-84058558411

13. Tools and Resources

The following climate adaptation tools and resources are intended to provide applicants with additional information that CRC considers relevant to resilience planning and its grant program. While the below resources are recommended, applicants are not required to consult or follow these tools and resources in developing their proposals.

CalAdapt
http://cal-adapt.org/
Cal-Adapt provides a view of how climate change might affect California. Find tools, data, and resources to conduct research, develop adaptation plans and build applications.

California General Plan Guidelines
http://opr.ca.gov/docs/OPR_COMPLETE_7.31.17.pdf
The Governor's Office of Planning and Research (OPR) 2017 General Plan Guidelines provide guidance to help local governments incorporate climate resiliency goals and strategies into their general plans pursuant to SB 379.

California Adaptation Planning Guide
http://resources.ca.gov/climate/safeguarding/local-action/
The Adaptation Planning Guide provides guidance to support regional and local communities in proactively addressing the unavoidable consequences of climate change. It provides a step-by-step process for local and regional climate vulnerability assessment and adaptation strategy development.

Safeguarding California – California's Climate Adaptation Strategy
http://resources.ca.gov/climate/safeguarding/
Safeguarding California is the strategy that organizes state government climate change adaptation activities, across a variety of state agencies. The Safeguarding California Plan was last updated in 2018.

ICARP Adaptation Clearinghouse
http://opr.ca.gov/planning/icarp/
The Adaptation Clearinghouse serves as a centralized source of information that provides the resources necessary to guide decision makers at the state, regional, and local levels when planning for and implementing climate adaptation projects to promote resiliency to climate change in California.

California's Fourth Climate Assessment
http://www.climateassessment.ca.gov/
California's Climate Change Assessments contribute to the scientific foundation for understanding climate-related vulnerability at the local scale and informing resilience actions, while also directly informing State policies, plans, programs, and guidance, to promote effective and integrated action to safeguard California from climate change.

Ocean Protection Council Sea-Level Rise Guidance
http://www.opc.ca.gov/webmaster/ftp/pdf/agenda_items/20180314/Item3_Exhibit-A_OPC_SLR_Guidance-rd3.pdf
The State of California Sea-Level Rise Guidance reflects advances in sea-level rise science and addresses the needs of state agencies and local governments as they incorporate sea-level rise into their planning, permitting, and investment decisions.

California Coastal Commission Sea Level Rise Policy Guidance
https://www.coastal.ca.gov/climate/slrguidance.html
The California Coastal Commission's Sea Level Rise Guidance provides recommendations for how to plan for and address sea level rise impacts, including a set of projections recommended for use in planning, permitting, investment, and other decisions.

REPORT TO CITY COUNCIL

City of Nevada City
317 Broad Street
Nevada City CA 95959
www.nevadacityca.gov

January 22, 2020

TITLE: A Resolution of the City Council of the City of Nevada City Adopting the First Amendment to the Professional Services Agreement for Legal Services (Jones and Mayer) Appointing Crystal Hodgson as the Contract City Attorney for Nevada City

RECOMMENDATION: Pass Resolution 2020-XX, a Resolution of the City Council of the Nevada City adopting the first amendment to the Professional Services Agreement for Legal Services (Jones and Mayer) appointing Crystal Hodgson as the contract City Attorney for Nevada City.

CONTACT: Catrina Olson, City Manager

BACKGROUND/DISCUSSION:
On April 2, 2015 the City Council approved a Professional Services Agreement with Jones and Mayer to provide contract legal services. At that time, Hal DeGraw, as an Attorney for Jones and Mayer, was appointed the contract City Attorney for Nevada City and Ryan Jones as the contract Assistant City Attorney.

On December 31, 2019 Hal DeGraw resigned as the contract City Attorney. Crystal Hodgson, an Attorney for Jones and Mayer has worked with the City on many "special assignments" over the last several years. Crystal Hodgson lives locally, in Nevada City and has been determined to be a good fit as transitioning into the role as the City's new contract City Attorney.

The attached amendment outlines the appointment of Crystal Hodgson as the contract City Attorney. The scope of services to be provided will remain unchanged. Hal DeGraw was billed out a rate of $75 per hour, and the general legal services of any other Attorney in the Firm was billed at $175.00 per hour. The amendment states as follows:

> ~~*The City shall pay Firm an annual retainer of $3,720.00 per year to cover overhead expenses, payable in monthly installments of $310.00 per month. $75.00 per hour will be paid for requested legal services of DeGraw.*~~ *The general legal services of Crystal Hodgson and any other attorney in the Firm will be billed at $175.00 per hour.*

The City Attorney serves at the pleasure of City Council. Staff is seeking approval of the attached Resolution approving the Professional Services Agreement appointing Crystal Hodgson the Nevada City contract City Attorney.

ENVIRONMENTAL CONSIDERATIONS: None.

FINANCIAL CONSIDERATIONS: Currently the fiscal year 19/20 budget totals $135,000 which includes $50,000 for a possible lawsuit settlement. The legal services budget has averaged around $85,000 to $120,000 per fiscal year (depending on services needed). The hourly rate is changing from $75 to $175 per hour. The goal is to manage the hours of legal services to be provided to maintain the noted average budget moving forward.

ATTACHMENT:

- ✓ Resolution 2020-XX, a Resolution of the City Council of the City of Nevada City Adopting the First Amendment to the Professional Services Agreement for Legal Services (Jones and Mayer) Appointing Crystal Hodgson as the Contract City Attorney for Nevada City
- ✓ First Amendment to Professional Services Agreement for Legal Services (Jones and Mayer)
- ✓ Original Contract with Jones and Mayer

RESOLUTION NO. 2020-XX

A RESOLUTION OF THE CITY COUNCIL OF THE CITY OF NEVADA CITY ADOPTING THE FIRST AMENDMENT TO THE PROFESSIONAL SERVICES AGREEMENT FOR LEGAL SERVICES (JONES AND MAYER) APPOINTING CRYSTAL HODGSON AS THE CONTRACT CITY ATTORNEY FOR NEVADA CITY

WHEREAS, Hal DeGraw, an Attorney with the firm Jones and Mayer, was appointed the contract City Attorney April 2, 2015 by the Nevada City Council; and

WHEREAS, contract City Attorney resigned from the position of Nevada City contract City Attorney December 31, 2019 leaving the position open; and

WHEREAS, Jones and Mayer provides other general legal services for the City of Nevada City since April 2, 2015 of which the City has used the legal services of Crystal Hodgson for special assignments for the course of the existing agreement; and

WHEREAS, Crystal Hodgson, an Attorney with Jones and Mayer, lives locally in Nevada County and has been determined to be a good fit to transition into the position of the new Nevada City contract City Attorney; and

WHEREAS, the scope of services will remain the same and the hourly rate of pay to provide legal services is outlined in the first amendment;

NOW, THEREFORE, BE IT RESOLVED that the City Council of the City of Nevada City pass Resolution of the City Council of the City of Nevada City Adopting the First Amendment to the Professional Services Agreement for Legal Services (Jones and Mayer) Appointing Crystal Hodgson as the Contract City Attorney for Nevada City:

PASSED, APPROVED AND ADOPTED by the City Council of the City of Nevada City at a public meeting held on the 22nd of January, 2020, by the following vote:

AYES:

NOES:

ABSENT:

ABSTAIN:

_____
Reinette Senum, Mayor

ATTEST:

By: _____
Niel Locke, City Clerk

FIRST AMENDMENT TO
PROFESSIONAL SERVICES AGREEMENT
FOR
LEGAL SERVICES
(JONES & MAYER)

The City of Nevada City, a municipal corporation (the "City") entered into a Professional Services Agreement for Legal Services (the "Agreement") with the firm of Jones & Mayer (the "Firm") effective May 1, 2015, approved by the Nevada City Council by Resolution No. _____. The City and the Firm (collectively the "Parties") desire to amend the Agreement with respect to the following terms:

A. Section 1 is amended to read as follows:

"1. APPOINTMENT OF CONTRACT CITY ATTORNEY

CRYSTAL HODGSON is hereby appointed Contract City Attorney of the City of Nevada City and shall serve and be compensated as provided by this Agreement. Ryan Jones is designated as Contract Assistant City Attorney and will serve in the absence of the Contract City Attorney. Hal DeGraw and Dean Pucci are designated as Deputy City Attorneys and may perform services for the City under this Agreement. Hodgson and any other attorneys of the firm of Jones & Mayer assigned to approved City business shall, at all times hereunder and at their sole cost and expense, be fully qualified and licensed to practice law in the State of California and before all appropriate federal courts and other bodies and tribunals.

Firm warrants that all services will be performed in a competent, professional, and timely manner in accordance with the standards prevalent in the industry."

B. All references throughout the Agreement to "Hal DeGraw" as the City Attorney shall be changed to "Crystal Hodgson."

C. Section 4 is amended to read as follows:

"4. COMPENSATION

Firm shall be compensated under the terms of this Agreement as follows:

A. General Legal Services

~~The City shall pay Firm an annual retainer of $3,720.00 per year to cover overhead expenses, payable in monthly installments of $310.00 per month. $75.00 per hour will be paid~~

~~for requested legal services of DeGraw.~~ The general legal services of Crystal Hodgson and any other attorney in the Firm will be billed at $175.00 per hour.

B.

Office Space

City shall provide office space at or near City Hall for the City Attorney or designee with phone and computer service for use as needed by attorney providing City Attorney services."

D. All other terms of the Agreement shall remain unchanged.

IN WITNESS WHEREOF, the Parties have executed this Agreement in duplicate on the _____ day of January 2020.

By: JONES & MAYER

_____
Richard D. Jones, Owner/President

By: CITY OF NEVADA CITY

_____
Reinette Senum, Mayor

Commented [CVH1]: In addition to deleted Hal's hourly rate of $75/hr, I deleted the retainer requirement. Ryan says he doesn't think the City was paying that, and it is unnecessary given that the firm will be covering my bar license fees, CLE, lexis, and all other resources and the City does not need to compensate the firm for any of the those costs.

Commented [CVH2]:

Commented [CVH3R2]: I deleted the requirement that the City provide Lexis Advance.

PROFESSIONAL SERVICES AGREEMENT
FOR
LEGAL SERVICES

This agreement is made and entered into by and between JONES & MAYER, hereinafter referred to as "Firm," and the CITY OF NEVADA CITY, a municipal corporation of the State of California, hereinafter referred to as "City."

RECITALS

The City desires to contract with the Firm to provide contract legal services to City.

Firm herein selected has extensive municipal experience, and is fully able to carry out the duties involved herein.

NOW, THEREFORE, in consideration of the mutual terms and conditions hereinafter set forth, it is agreed as follows:

1. APPOINTMENT OF CONTRACT CITY ATTORNEY

Hal DeGraw (DeGraw) is hereby appointed Contract City Attorney of the City of Nevada City and shall serve and be compensated as provided by this Agreement. Ryan Jones is designated as Contract Assistant City Attorney and will serve in the absence of the Contract City Attorney. DeGraw and any other attorneys of the firm of Jones & Mayer assigned to approved City business shall, at all times hereunder and at their sole cost and expense, be fully qualified and licensed to practice law in the State of California and before all appropriate federal courts and other bodies and tribunals.

2. SCOPE OF WORK

Firm agrees to perform all necessary legal services as Contract City Attorney, and shall:

A. Attend all regularly scheduled City Council meetings.

B. Attend other meetings at City Hall as required by the City Manager.

C. Advise the City Council; appointed Commissions, Committees, and Boards; City staff; and other City officials on all legal matters pertaining to City business.

D. Prepare, review, and approve as to form, contracts, agreements, resolutions, ordinances, and all other standard City documents.

E. Prepare such written and oral legal opinions as shall, from time to time, be requested by the City.

F. Perform such other routine legal services as are required, from time to time, by the City Manager.

G. Represent City in litigation and administrative proceedings as directed by the City Manager.

The City specifically reserves the right to retain, at its option, other legal counsel for litigation and other specialized legal matters including, but not limited to, workers' compensation. In particular, the City may retain attorneys recommended by PARSAC on tort claims covered by PARSAC. The City Attorney will supervise outside legal counsel's work. Such reservation of rights does not preclude the City from assigning these matters to Firm as part of the scope of duties under Section 2 or requesting recommendations concerning the selection of outside counsel.

Firm warrants that all services will be performed in a competent, professional, and timely manner in accordance with the standards prevalent in the industry.

3. COORDINATION AND ORGANIZATION

As the Contract City Attorney, DeGraw shall process, coordinate, and direct, as necessary, all legal services provided under this Agreement in order to maximize the timeliness and usefulness of the delivery of such services. DeGraw or his designee shall attend all City Council meetings and other meetings, as required, and be available at all reasonable times to the Mayor and City Council, the City Manager, and persons designated by the City Manager, in relationship to all legal services to be furnished by Firm hereunder. DeGraw shall also direct and coordinate all internal activities so that all services provided by Firm to City shall be fully competent, consistent, and timely. It is expressly understood that the experience, knowledge, capability, and reputation of Firm were a substantial inducement for the City to enter into this Agreement.

4. COMPENSATION

Firm shall be compensated under the terms of this Agreement as follows:

A. General Legal Services

The City shall pay Firm an annual retainer of $3,720.00 per year to cover overhead expenses, payable in monthly installments of $310.00 per month. $75.00 per hour will be paid for requested legal services of DeGraw. The general legal services of any other attorney in the Firm will be billed at $175.00 per hour.

B. Office Space

City shall provide office space at or near City Hall for the City Attorney or designee with phone and computer service with Lexis Advance access for use as needed by attorney providing City Attorney services.

C. Litigation and Special Legal Services

Fees associated with litigation and special legal services shall be billed separately and at the rate of $185 per hour for attorney services (other than that performed by DeGraw) and $100 per hour for paralegal service. Special legal services include those matters which present unique legal and/or factual issues. Special legal services differ from general legal services in that they are of an irregular, and typically non-recurring basis. Examples include all litigation, whether civil or criminal, City, Successor Agency or Water Authority work. Special legal services are matters of unusual complexity or requiring an extraordinary dedication of attorney time such as Environmental Impact Reports or other complex environmental work, initiatives, interagency conflicts/issues, negotiation and drafting of complex Owner Participation Agreements or Disposition and Development Agreements, etc. Items subject to this categorization are determined by consultation between the City Attorney and the City Manager or City Council. The City Attorney may not unilaterally designate any matter as a special project.

D. Expenses

Firm shall also be reimbursed for direct out-of-pocket expenses actually and necessarily incurred in the course of providing legal services hereunder this agreement, except as noted in Section 4-A. These charges included, but are not limited to: travel expenses (as related to litigation matters only), court filing fees, attorney services (includes service of process fees, arbitrators, and mediators), messenger services, Lexis-Nexis research outside of our prepaid service fee, overnight delivery fees, parking fees, actual costs for large reproduction projects (over 100 pages) if performed by an outside service, or $0.10 per page (b/w) and $0.20 per page (color) if performed in house, and any other expense not listed above which becomes necessary to the successful resolution of a client matter. Our rates are listed below.

Reproduction Charges:	$ 0.10 per page (b/w)/$0.20 per page (color) or actual cost (large jobs performed by outside service)
Court filing fees	Actual

Attorney services	Actual (Includes service of process fees, experts, arbitrators, and mediators),
Messenger services	Actual
Lexis-Nexis research (Outside of our prepaid service fee)	Actual
Overnight delivery service	Actual

E. Monthly Statements

Firm shall submit itemized statements of all payments due hereunder on a monthly basis to the City Manager. All work performed by the Firm shall be billed in tenths of an hour. The statement shall be in a form approved by the City, and shall set forth a description of all work performed, the hours worked, the person performing the work, the rate charged, and any eligible costs or expenses.

F. Payment

All hours shall be billed by the 15th day of each month following the close of the prior month for which hours are being billed. Payment for hours shall be due and payable after review by the City Manager.

G. Effective Date and Term

The term of this Agreement shall continue unless otherwise terminated or amended and shall commence on May 1, 2015.

5. PROHIBITION AGAINST SUBCONTRACTING OR ASSIGNMENT

Firm shall not contract with any other entity to perform in whole or in part the services required hereunder without the express approval of the City. In addition, neither this Agreement nor any interest herein may be assigned or transferred, voluntarily or by operation of law, without the prior approval of the City.

6. CONFLICT OF INTEREST

Firm shall at all times avoid conflicts of interest in performance of this Agreement. In the event that a conflict arises, Firm shall immediately notify City. Within thirty (30) days following execution of this Agreement, Attorney shall file a conflict of interest disclosure statement disclosing the information related to potential conflicts of interest to the extent such disclosure is required by law.

7. INDEPENDENT CONTRACTOR

Firm shall perform all services required hereunder as an independent contractor of the City, and shall remain at all times as to City a wholly independent contractor with only such obligations as are consistent with that role. Firm shall not at any time or in any manner represent that it or any of its agents are City employees.

8. INSURANCE AND INDEMNIFICATION

A. Insurance

Firm shall procure and maintain, at its cost, and submit concurrently with its execution of this Agreement, errors and omissions/professional liability insurance coverage in the amount of a minimum of $750,000. Firm shall also maintain workers compensation coverage with policy limits of a minimum of $750,000, and general and automobile liability insurance with policy limits of a minimum of $750,000.

Such insurance shall be kept in effect during the term of this Agreement and shall not be cancellable without thirty (30) days' written notice of proposed cancellation to the City. The insurance policy shall contain a severability of interest clause providing that the coverage shall be primarily for losses arising out of Firm performance hereunder, and neither the City nor its insurers shall be required to contribute to any such losses.

B. Indemnification

The Firm shall defend, indemnify, and hold harmless the City, its officers and employees, from and against any and all actions, suits, proceedings, claims, demands, losses, costs and expenses, including legal costs and attorneys' fees, for injury to person(s) for damages to property (including property owned by the City), and for errors and omissions committed by Firm, its officers, employees, and agents, arising out of or relating to Firm's performance under this Agreement, except to the extent of such loss as may be caused by City's own negligence or that of its officers or employees.

9. RECORDS AND REPORTS

A. Records

Firm shall keep such books and records as shall be necessary to perform the services required by this Agreement and enable the City to evaluate the performance of the required services. The City shall have full and free access to such books and records which deal specifically with the services performed by Firm for City at all reasonable times, including the right to inspect, copy, audit, and make records and transcripts from such records.

B. Ownership of Documents

All reports, records, documents, and other materials prepared by Firm, its employees and agents in the performance of this Agreement shall be the property of the City and shall be delivered to the City upon request by the City or upon termination of this Agreement. Firm shall have no claim for further additional compensation as a result of the exercise by the City of its full rights of ownership of the documents and material hereunder. Firm may retain copies of said documents for its own use.

C. Release of Documents

All reports, records, documents, and other materials prepared by Firm in the performance of services under this Agreement shall not be released publicly without prior written approval of the City.

Upon receipt of any notice of termination, Firm shall cease all services herein except as may be specifically approved by the City. Firm shall be entitled to compensation for all services rendered prior to the receipt of notice of termination and for work performed in order to complete a proper transition of City legal work, including ongoing litigation, to the new City Attorney.

10. NONDISCRIMINATION

Firm pledges there shall be no discrimination against or segregation of any person or groups of persons on account of race, color, creed, religion, sex, marital status, national origin or ancestry in the performance of the services specified within this Agreement.

11. TERMINATION

Firm shall serve under the terms of this Agreement at the pleasure of the City Council, and the City Council hereby reserves the right to terminate this Agreement at will. At that time, all further obligations to pay Firm for services rendered hereunder shall thereupon cease, except that City shall be obliged to pay for all costs and

expenditures lawfully incurred by Firm prior to the effective date of such termination. Firm reserves the right to terminate this Agreement by giving thirty (30) days written notice to City. In the event of termination of this Agreement by either party, Firm shall cooperate with the City in transferring the files and assignments to the City Clerk for use during the interim of hiring another City Attorney. Firm shall be compensated at the hourly rates set forth in Section 4.A. of this Agreement should Firm be called upon to perform any services after the effective date of termination, including the transfer of files and assignments.

12. NOTICES

Notices regarding this Agreement shall be given to the parties at the following addresses:

City: City of Nevada City
Attn: City Manager
P.O. Box 1236
Nevada City, CA 93515

Firm: Jones & Mayer
Attn: Richard Jones
8150 Sierra College Blvd, Suite 190
Roseville, CA 95661

13. AMENDMENT OF AGREEMENT

This Agreement contains all the agreements of the parties hereto. This Agreement may be amended at any time by mutual consent of the parties by an instrument in writing.

IN WITNESS WHEREOF, the parties have executed this Agreement in duplicate the 22nd day of April, 2015.

By: _____
Richard D. Jones, Owner/President
JONES & MAYER

By: _____
Teri Anderson, Mayor
CITY OF NEVADA CITY

REPORT TO CITY COUNCIL

City of Nevada City
317 Broad Street
Nevada City, CA 95959
www.nevadacityca.gov

January 22, 2020

TITLE: Funding Opportunities for Undergrounding Overhead Utilities

RECOMMENDATION: Provide staff direction to request Rule 20A funds from Nevada County to augment the City's allocation of Rule 20A work credits for conversion of overhead electric distribution lines and facilities to underground.

CONTACT: Bryan McAlister, City Engineer

BACKGROUND/DISCUSSION:
The California Public Utilities Commission (CPUC) has authorized electric and telecommunication utilities to convert overhead utility lines and facilities to underground pursuant to Electric Rule 20 and Telecommunication Rule 32. The City has adopted an Ordinance authorizing the City Council to designate areas within which all existing overhead poles, overhead wires and overhead equipment associated with the distribution of electric power, telecommunication services and cable television should be removed and replaced with underground wires and facilities. City Council also determined priorities for areas to be converted to underground electric in January 2009 with amendments in August 2012. This location at Broad Street was determined to be the first priority for undergrounding.

On June 28, 2017, City Council designated and established Underground Utility District No. 6 at upper Broad Street by Resolution 2017-44. City staff has been working with PG&E, as lead agency, to implement the undergrounding district for conversion of overhead utility lines to underground. This process has included field meetings with PG&E, ATT and Comcast and coordination of design. PG&E procured construction bids for the project and determined that the cost exceeds the amount of the City's accumulated Rule 20A work credits. As of December 2019, the City's accumulated work credit amount is $644,431. PG&E has agreed that the City may borrow against its future credits for five years, which brings the work credit amount to $740,000, however this is not enough to complete the project as currently designed. PG&E and the City have and has identified potential cost savings for the project, and have determined that additional funds of approximately $200,000 will be necessary to complete the project.

City staff is proposing to make a formal request to Nevada County for $200,000 from Nevada County's Rule 20A work credits. This amount could either be borrowed from the County and be repaid within approximately 15 years, or granted to the City for mutual benefit of County residents that use the arterial roadway for access to Unincorporated Areas north of Nevada City. The agreement for use of the County's Rule 20A funds would be subject to approval by City Council and Nevada County Board of Supervisors.

ENVIRONMENTAL CONSIDERATIONS: Subject to rules and requirements for CEQA exemption for utility relocations.

FINANCIAL CONSIDERATIONS: Funded by PG&E Rule 20A program for undergrounding overhead electrical facilities.

ATTACHMENT:
- ✓ Copy of Resolution 2017-44 establishing Underground Utility District No. 6

RESOLUTION No. 2017-44

A RESOLUTION OF THE CITY COUNCIL OF THE CITY OF NEVADA CITY ESTABLISHING NEVADA CITY UNDERGROUND UTILITY DISTRICT NO. 6

WHEREAS, the California Public Utilities Commission (CPUC) has authorized electric and telecommunication utilities to convert overhead utility lines and facilities to underground pursuant to Electric Rule 20 and Telecommunication Rule 32, and

WHEREAS, pursuant to certain criteria, CPUC rules allow participating cities and counties to establish legislation authorizing the creation of underground utility districts within which existing overhead electric distribution and telecommunication distribution and service facilities will be converted to underground, and

WHEREAS, the City of NEVADA CITY, has adopted an ordinance authorizing the City Council to designate areas within which all existing overhead poles, overhead wires and overhead equipment associated with the distribution of electric power, telecommunication services and cable television should be removed and replaced with underground wires and facilities; and

WHEREAS, the City Engineer for the City of NEVADA CITY has consulted with the affected public utilities and such utilities have agreed that the proposed underground conversion district, designated the NEVADA CITY Underground Utility District No. 6 and more particularly described in Exhibit 1 attached hereto and incorporated herein by reference, meets the criteria established by the rules of the CPUC, to wit, that the street or road or right-of-way is considered an arterial street or major collector as defined in the Governor's Office of Planning and Research General Plan Guidelines, and

WHEREAS, each year the City of NEVADA CITY is notified by PG&E regarding the allocation of work credits for conversion of overhead electric distribution lines and facilities to underground, known as Rule 20A allocations, and

WHEREAS, the City Engineer for the City of NEVADA CITY has consulted with PG&E and determined that the City has accumulated Rule 20A work credits or PG&E has agreed that the City may borrow against future credits sufficient to complete the proposed overhead to underground conversion project, and

WHEREAS, the City of NEVADA CITY and the affected utilities have agreed by letter that each utility shall complete the engineering of their respective portion of the City of Nevada Overhead to Underground Utility Conversion Project, and

WHEREAS, the City of NEVADA CITY and the affected utilities have agreed by letter that PG&E shall be responsible for preparation of the trench profile and composite drawings and that PG&E shall be designated as "trench lead" to manage trenching, installation of substructures, and pavement restoration and such other work, and

WHEREAS, the City Engineer of the City of NEVADA CITY and the affected utilities have agreed on a work schedule which meets their respective capabilities and further agreed to waive any administrative fees, costs or special street restoration requirements for purposes of this project, and

WHEREAS, to the extent required, the City of NEVADA CITY has agreed to provide easements or rights of way on private property as may be necessary for installation of utility facilities in a form satisfactory to the affected utilities, and

WHEREAS, the City Council of the City of NEVADA CITY has now received the report from the City Engineer recommending that the area identified in Exhibit 1 should be designated as an underground utility district within which all existing overhead poles, overhead wires and overhead equipment associated with the distribution of electric power, telecommunication services and cable television should be removed and replaced with underground wires and facilities; and

WHEREAS, upon the recommendation of the City Engineer, the City Council of the City of NEVADA CITY has determined that the proposed NEVADA CITY Underground Utility District is categorically exempt from environmental review pursuant to the California Environmental Quality Act, and

WHEREAS, the City of NEVADA CITY has notified all affected property owners within the proposed NEVADA CITY Underground Utility District and inviting same to attend a public hearing to discuss formation of the proposed district, and

WHEREAS, the City Council of the City of NEVADA CITY held public hearings at which time the Council did receive and consider the recommendation of the City Engineer and did hear any and all objections or protests that were raised by the owners of property within the above described district pertaining to designating this area an underground utility district;

NOW, THEREFORE, BE IT RESOLVED, by the City Council of the City of NEVADA CITY that:

Section 1. The public interest requires the removal of all existing utility poles [excepting those poles supporting streetlights, traffic signals or trolley lines], overhead wires and associated overhead structures and installation of underground wires and facilities for supplying electric power, communication, or similar associated services within the areas as shown in Exhibit 1, attached hereto, with such area being designated as the NEVADA CITY Underground Utility District, and

Section 2, That the utility companies, cable television services and other affected services shall commence work on installation of underground facility installation in NEVADA CITY Underground Utility District and that as each phase of the project is complete and ready for conversion from overhead to underground utility facilities, all fronting property owners shall be notified by first class letter, postage pre-paid, of the schedule for conversion of all utility service lines, and

Section 3, The electric utility shall USE the underground conversion allocation computed pursuant to decisions of the California Public Utilities Commission for the purpose of providing to each premises requiring it in NEVADA CITY Underground Utility District a maximum of one hundred feet of individual electric service trenching and conductor (as well as backfill, paving and conduit, if required) and each other serving utility shall provide service trenching and conductor in accordance with its rules and tariffs on file with the California Public Utilities Commission or as required by its Franchise Agreement with the City of NEVADA CITY, and

Section 4. The electric utility shall USE said underground conversion allowance allocation, up to a maximum amount of $1500 per service entrance excluding permit fees, for the conversion of electric service panels to accept underground service in the NEVADA CITY Underground Utility District, and THE CITY OF NEVADA CITY shall be financially responsible for any and all costs not covered by the electric utility for the installation and maintenance of the conduit and termination box located on, under or within any structure on the premises served, and

Section 5. That upon notification as specified in Section 2, all property owners in NEVADA CITY Underground Utility District shall have underground electrical entrance facilities installed and inspected pursuant to the CA Electrical Code within sixty (60) days and that should any property owner fail to install satisfactory underground electrical entrance facilities by the date specified in the notice, the electric utility shall notify the City Engineer who shall, within thirty (30) days direct the electric utility in writing to discontinue electrical service to the property, without recourse, pursuant to Rule 11 until electrical entrance facilities are ready to accept underground electrical conductors and have passed the necessary inspection requirements, and

Section 6. That once all services have been converted from overhead to underground, the utility companies, cable television services and other affected services shall remove all poles (except as specified above) and associated overhead facilities in NEVADA CITY Underground Utility District, within ninety (90) days.

PASSED, APPROVED AND ADOPTED by the City Council of the City of Nevada City at a regulay meeting held on the 28th day of June, 2017 by the following vote:

AYES: **PHELPS, STRAWSER, MOBERG, PARKER**

NOES: **NONE**

ABSENT: ~~**NONE**~~ Senum

ABSTAIN: **NONE**

Evans Phelps

Evans Phelps, Mayor

ATTEST:

Niel Locke

Niel Locke, City Clerk

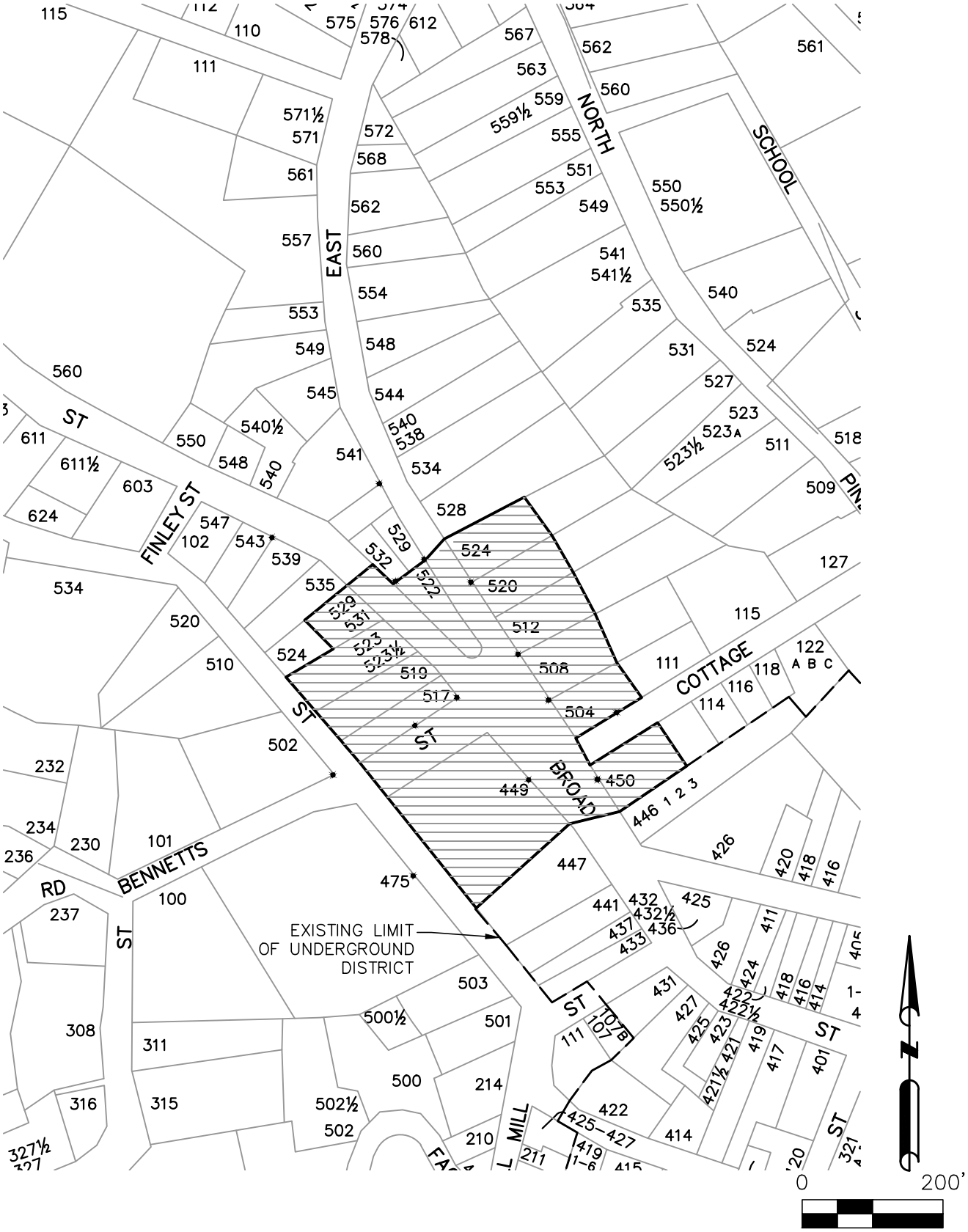

2016	Nevada City Proposed Underground District No. 6	1 of 1

REPORT TO CITY COUNCIL

City of Nevada City
317 Broad Street
Nevada City CA 95959
www.nevadacityca.gov

January 22, 2020

TITLE: Bollard Options for the City's Historic District

RECOMMENDATION: Provide the Police Department with direction to move forward with looking into different funding options and equipment options for installing bollards in the Historic District of the City.

CONTACT: Sgt. Sean Mason, Police Sergeant (Special Events Coordinator)
Sgt. Luke Holdcroft, Police Sergeant (Terrorist Liaison Officer)

BACKGROUND / DISCUSSION:
On August 16th 2019 at the City's Strategic Planning Session Chief Ellis was tasked with looking into the possibility of installing safety bollards in the Downtown Historical District. Nevada City is one of the State's best places to come and partake in special events and festivities such as Victorian Christmas, Hot Summer Nights, Farmers Markets and many, many more.

The Police Department has been tasked with closing down the streets for these special events and preventing vehicles from entering the area when large crowds of people are present. Initially the Police Department utilized wood a frame type barricades to block off the streets. Over time the public began moving the barricades and driving into the events causing a traffic flow issues for these events. Public works and the Police Department then began utilizing steel barricades in hopes of a more secure environment and that this would detour the public from moving the barricades. It has been determined that with the current wood and/or steel barricades the public will move them causing traffic flow/blockage issues and creating pedestrian versus traffic issues during these events.

The Police Department has taken the opportunity to designate Sgt. Holdcroft as the Terrorist Liaison Officer (TLO). Given that position, Sgt. Holdcroft has had the ability to attend several trainings on domestic terrorism and areas to look into for threat assessment. In reviewing the assessment, it has been that the City identify increased security options for special events. One of the options identified would be the potential installation of bollards on the perimeter streets of the Historic District to prevent vehicles from entering the event areas causing traffic flow issues, damage to property and pedestrian versus vehicle situations.

There are currently several different styles of bollards (removable, spring loaded and hydraulic). The cost between all options can vary tremendously.

Chief Ellis in communicating with Consulting Assistant City Engineer, Bill Falconi and there are certain areas of the City (Commercial Street) that the cost of installation of the bollards could potentially be covered under Measure "S" funds during upcoming infrastructure improvements.

ENVIRONMENTAL CONSIDERATIONS: None

FISCAL IMPACT: To be determined

ATTACHMENTS:
- ✓ 3 Bollard Brochures

ONE50

URBACO

URBACO

Known the world over for having invented the retractable bollard, Urbaco stands for topnotch technology to make the space around you more liveable and comfortable. With Urbaco you can organise and modify traffic flows and even cut back on environmental pollution. Our product range brings you high-quality performance and unmatched aesthetic accuracy, so the elements you choose always fit perfectly into any context, whether historical or modern. Urbaco is continually developing, and boasts a capillary network of partners and collaborators to quickly, efficiently and competitively meet our clients' requests. From estimate to installation, from maintenance to after-sales assistance. It's about providing intelligent service and solutions.

URBACO, a CAME GROUP company.

ISO 9001
ISO 14001
BUREAU VERITAS
Certification

ONE50

The ONE50 hydraulic bollard is designed to protect sensitive areas where the need for security of buildings and people is crucial. A single ONE50 bollard has been duly crash-tested under provision of ASTM2656 M50 Standard. **It efficiently withstands the front impact of a 6.8 Ton vehicle travelling at 50 mph (80 km/h)**. ONE50 is designed to protect sensitive sites, manage and regulate traffic in strategic access points.

Applications

- Government buildings
- Ports
- Embassies
- Consulates
- Nuclear plants
- Banks
- Military facilities
- Prisons
- Airports
- Public buildings

Composition of a set

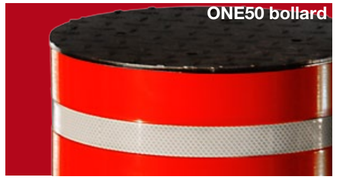

+

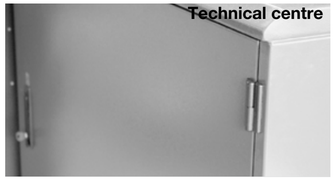

+

=

[The solution ONE50]

Reference	Width of the access to secure	ONE50 bollard	Technical centre dimensions	Connection kit
ONE50-SET1	<2.750m	1	1100 x 800 x 420	1
ONE50-SET2	<4.250m	2	1100 x 800 x 420	2
ONE50-SET3	<5.775m	3	1100 x 1000 x 650	3

ONE50-SET1

ONE50-SET2

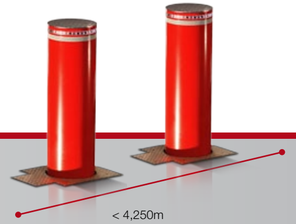

ONE50-SET3

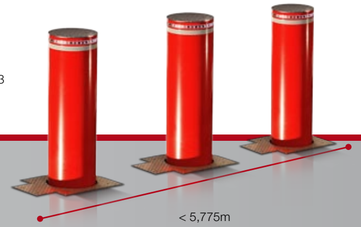

Model

Rectractable

Characteristics

- Ø325mm
- H1000mm
- 1150kg (total weigth)
- 560kg (bollard head)
- Hydraulic power-drive
- Working pressure : 45 bars
- Operating temperature from -20°C to +70°C
- Rising time 5.3s
- Lowering time from 3 to 6s (depending on weather conditions)
- Electric protection rating : IP67

The URBACO ADVANTAGES

- **High impact resistance**
- **One bollard that stops a 6.8t truck running at 50mph**
- **Certified to ASTM F-2656 M50 standard***
- **Compatible with SYGMA II, URBACO centralized management software**

* Equivalent of the DOS and PAS68 standards

Finishing

- Oven-hardened zinc primer coat for reinforced corrosion resistance and improved adhesion for top coat
- Matt-finish thermosetting polyester powder coating

Colors

RAL3002

Description

1. Top bollard plate : painted chequered steel
2. Optional lighting ring (Red)
3. Class 2 White reflective tape
4. Bollard head : specific Steel alloy
5. Cover finishing plate : painted chequered steel
6. Steel locking cover
7. Separated technical box
8. Hydraulic jack fast connector
9. Steel casing
10. Removable accessories plate fitted with Upper and Lower limit switches
11. ONE50 bollard
12. Safety loop
13. Safety loop
14. Automatic exit safety loop
15. Technical centre
16. Traffic lights on post

Options

- Red LED lighting ring
- Low and Up end Slowdown
- Top and Cover finishing: Stainless steel chequered plate
- Emergency fast rising (1.5s)
- Manual rising (1 per bollard)
- Rainwater Draining Pump
- Frost-protection device -20°C
- Frost-protection device -50°C
- Buzzer : signal of moving bollard by buzzer
- Stainless steel jacket
- Lost casing
- Non standard RAL color

- a 325 mm
- b 1000 mm
- c 1690 mm
- d 500 mm
- e 490 mm

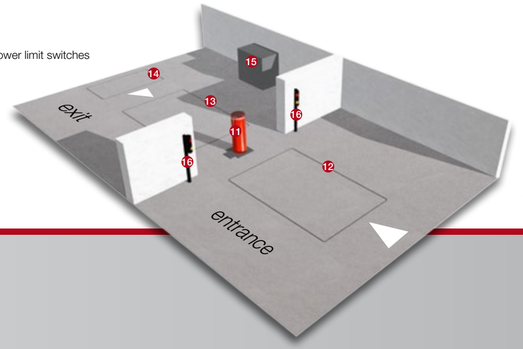

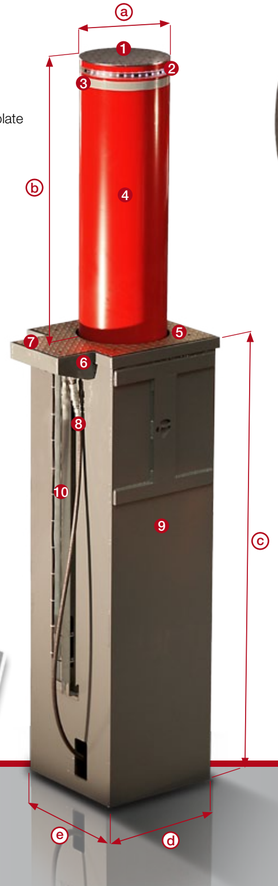

Cylinder model

Model

Fixed Normal foundation

Fixed Shallow foundation

Removable On demand

Characteristics

- Ø325mm
- H1000mm
- 850kg (removable) 700kg (fixed)
- Class 2 White reflective tape
- Bollard head, cover and casing made in steel
- Electric protection rating : IP67

Finishing

- Oven-hardened zinc primer coat for reinforced corrosion resistance and improved adhesion for top coat
- Matt-finish thermosetting polyester powder coating

Colors

RAL3002

Options

- Red LED ligthing ring
- Top and Cover finishing: Stainless steel chequered plate
- Other RAL than standard

Fixed model

Removable model

ONE bollard that stops
a 6.8t truck running at **50** Mph

DC-ONE50-EN (06-2011)

Intellectual property of URBACO – Copying forbidden – Specifications not contractually binding - Changes may be made without prior notice - Most of the models shown are patented – 12/2009
URBACO S.A – a limited liability company with a capital of 1.5 M€ - Siret 33944567800032 R.C.S AVIGNON 339 445 678 – VAT FR 06 339 445 678

Urbaco S.A.
Z.A. du Couquiou
84320 Entraigues - FRANCE
www.urbaco.com - urbaco@urbaco.fr

CAMEGROUP
freedom innovation

Ground Retractable Bollard
MODEL GRB-400

ASTM M30 (K4) Engineered
Prefabricated Bollard
One Person Operation

- ASTM M30 (K4) Engineered (uses crash tested components & connections)
- One (1) person raises and retracts bollard. Spring assisted lifting.
- Eliminates manpower, equipment, and time associated with removeable bollards.
- Lockable in the raised or lowered position.
- Flush with pavement when lowered.
- Traffic rated for heavy truck loads.
- Allows for field adjustments.
- Bi-directional stopping capability.
- Excavation 36" wide with 4000 psi concrete.
- Easy to install with turns and across grade elevation changes.
- Variety of bollard colors and finishes are available to meet customer requests.
- Drawings, submittals, engineering support, and installation instructions are included.
- Electric model available.
- Excellent Crowd Protection Barrier.

Retracted Position

Raised Position

BARRIER 1 SYSTEMS, INC.

www.barrier1.us
(336) 617-8478 phone (336) 617-8471 fax

Barrier1 Systems, Inc.
Greensboro, NC USA

12042017

CERTIFIED PERIMETER PROTECTION

J355 M30-P1 HA

Retractable security bollard

type

automatic

height

39.4 in (1000 mm)

The AUTOMATIC bollard FAAC J355HA-M30-P1 is designed and tested for the protection of sensitive areas such as airports, embassies, consulates, banks, ports, etc.
The bollard FAAC J355HA-M30-P1 has been tested according to: "ASTM F 2656-07 - Standard Test Method for Vehicle Crash Testing of Perimeter Barriers", obtaining certification for the highest class of penetration possible. Classification M30-P1 indicates that the bollard FAAC J355 is able to stop a 15,000 lb (6,800 kg) truck travelling at 30 mile/h (50 km/h) with just 39 in (1 meter) of total penetration (P1).

- CERTIFIED according to Standard ASTM F 2656-07 M30
- Supplied with the main accessories already included
- Lock in the up position guaranteed even in the event of a power outage
- Extreme care in the selection of materials
- Also available in the EFO (Emergency Fast Operation) version for very fast rise time

DIMENSIONS AND TECHNICAL SPECIFICATIONS

Model	**J355 HA**	**J355 HA Stainless Steel**
Drive	Hydraulic operator	
Cylinder stroke	39.4 in (1.000mm)	
Cylinder diameter	14 in (355 mm)	
Cylinder material	Steel S355JR EN10210 0.63 in (16mm) thickness	
Cylinder surface treatment	Cataphoresis and polyester powder painted RAL 7021 metallic dark grey	AISI 316L satin finished
Cylinder head	Aluminium RAL 9006	
Rise time	Standard version - approx. 6 sec (*)/ EFO version - approx. 1.5 sec(*)	
Descent time	Approx. 2 sec	
Input voltage	230 Vac +6% - 10%; 50 / 60 Hz	
Max Power	1,200W	
Maximum force	1,124 lbf (5,000 N)	
Hydraulic pump protection class	IP 67	
Recommended use	Security areas	
Reflecting strip height	2.2 in (55 mm)	
Impact resistance	150 Kjoules	
Crash resistance	656 KJoules (according to the ASTM standards F2656-07 - M30)	
Max thrust force	5000N	
Total weight (Bollard + Pit)	1,080 + 550 lb (490+250 kg)	
Operating ambient temperature	5°F - 131°F (-15 °C / +55 °C)	
Operating ambient temperature with heater (optional)	-13°F - 131°F (-25 °C / +55 °C)	
Foundation size (LxWxH)	126x63x71 in (3200x1600x1800 mm)	

(*) *measured at 230V*

STANDARD VERSIONS IN PAINTED STEEL

Models	Height	Shipping Wt (approx)	Part No	Price
J355 HA M30-P1	39.4 in (1,000 mm)	1,200 lb (550 Kg)	116301	**$23,047**
J355 HA M30-P1 EFO			116302	**$26,510**
J355 HA PIT		440 lb (200 Kg)	116110	**$5,508**

The product features:
- steel cylinder, thickness 0.63 in (16 mm) with cataphoresis treatment and painted
- powder paint dark grey metallic RAL 7021
- flashing lights ring with central LED
- hydraulic lock in the up position (in the event of a power outage)
- watertight galvanized steel pit sheet with built-in drainage connection
- emergency circuit for a fast rise time (EFO version only)

STANDARD VERSIONS IN SATIN FINISH STAINLESS STEEL AISI 316

Models	Height	Shipping Wt (approx)	Part No	Price
J355 HA M30-P1	39.4 in (1,000 mm)	1,200 lb (550 Kg)	116331	**$25,327**
J355 HA M30-P1 EFO			116332	**$28,917**
J355 HA PIT		440 lb (200 Kg)	116110	**$5,508**

The product features:
- steel cylinder, thickness 0.63 in (16 mm) with cataphoresis treatment and sleeve in stainless steel satin-finished
- flashing lights ring with central LED
- hydraulic lock in the up position (in the event of a power outage)
- watertight galvanized steel pit sheet with built-in drainage connection
- emergency circuit for a fast rise time (EFO version only)

CONTROL BOARD

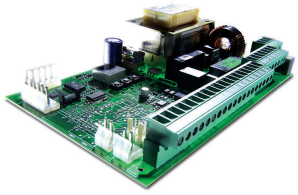

JE275 bollard control board
controls 1 J355 M30-P1 bollard

Part No	116300
Price	$693

Foundation pit for J355 M30 HA

Part No	116110
Price	$5,508

OPTIONAL ACCESSORIES

Pit heater for J355

Part No	116202
Price	$989

J355 Manual release kit

Part No	116102
Price	$148

REPORT TO CITY COUNCIL

City of Nevada City
317 Broad Street
Nevada City CA 95959
www.nevadacityca.gov

January 22, 2020

TITLE: Draft Request for Proposals (RFP) for Solar Photovoltaic Projects, including a Potential Project at the Old Airport property.

RECOMMENDATION: Review the draft RFP, make modifications if necessary and approve for distribution to qualified solar photovoltaic system developers

CONTACT: Amy Wolfson, City Planner

BACKGROUND:
City Council passed Resolution 2017-49 on August 9, 2017 establishing a goal of 100% renewable energy for Nevada City and on October 25, 2017 recognized the 100% Renewables Committee as an independent Charter with a charge of helping Nevada City reach this goal.

The City has simultaneously been working toward developing a Master Plan for the Old Airport Property since May 2017. The 100% Renewables Committee has expressed great interest in use of the Old Airport property to support a solar farm as one of the means for reaching the City's 100% renewable energy goal. The Committee encouraged the City to utilize the Sustainable Energy Economic Development Fund (SEED) as administered by Strategic Energy Innovations (SEI). On March 27, 2019, Council approved an MOU with SEI to conduct a feasibility study on several City properties, including the Old Airport property. SEI is currently developing a "Request for Proposals (RFP)" for potential solar farm development at the Old Airport property in conjunction with other jurisdictions within Nevada and El Dorado County in order to facilitate development of an aggregated Solar Procurement Solicitation and take advantage of economies of scale, a draft of which is attached to this report. At the January 8, 2020 meeting, Council provided direction to staff to discontinue work on the Old Airport Master Plan until bids are reviewed in response to the RFPs.

DRAFT RFP:
In September 2019, the 100% Renewables Committee sought input from staff regarding information to include in the draft RFP. The recommended objectives below are incorporated within the Old Airport Spec Sheet, attached, which will be included in the RFP and for the most part, integrate recommendations of the 100% Renewables Committee, SCI, and City staff.

The committee further sought input from the Greater Champion Neighborhood Association who is requesting that the solar farm RFP incorporate an emergency access

component (see objective 10). Staff suggests that this component is more appropriate to incorporate into the Master Plan development currently in process, as opposed to the solar farm RFP, so that appropriate safety personnel can provide recommendations and so that funding of this improvement can be worked out between the City and with the beneficiaries.

Objectives as currently provided in the Old Airport Spec Sheet:

1. The City is in the process of developing a Master Plan for the entire 100+ acre Old Airport site, and the solar developer will be required to participate in the planning process.

2. The City is asking that the developer consider a small portion of the project to be developed as solar canopies over to-be-built vehicle parking for up to 20 vehicles, which will be used to support other proposed site uses identified in the Master Plan. (Future parking to be built by the City in the orange-outlined area in Figure 1.)

3. The City is asking the solar developer to design and install a system of screening for the project that provides security and is aesthetically consistent with the forested location. It is preferred that native vegetation or other natural screening material be integrated with the security fencing.

4. The City is asking the solar developer to consider a present or future battery storage component in the response to the RFP.

5. The City asks that the solar developer consider the inclusion of electrical facilities that will power symbiotic uses within the proposed Master Plan (i.e., lighting for a small meeting facility, trails, carport parking, etc.). The City is considering a future Corporation Yard in the location shown in Figure 1. It is possible that the proposed use will require PG&E to install additional distribution capacity to the site.

6. The City has identified a preferred point of access that adjoins the proposed parking area (see white line joining W. Airport Rd to solar and City areas in Figure 1) and asks that the solar developer incorporate this access point into the proposed solar design.

7. The City is aware that the site was used previously as a local airport many decades ago, but does not believe that extensive environmental mitigation requirements will be necessary. The site is mostly cleared and does not appear to provide habitat for endangered species. Once project proposals are received, Council will evaluate proposals to determine the scope of the project and will direct staff to review the solar farm development proposal pursuant to the California Environmental Quality Act (CEQA) either as a stand-alone project or in conjunction with a draft Master Plan.

8. The City is aware of the challenges in identifying a power purchaser for the output from the proposed solar facility. The City intends to purchase a portion of the generation for its municipal uses. There is a desire to provide the power to the local citizenry in some form of community-based power purchase agreement. It is possible this site will be included in a future regional load-serving entity (LSE) renewable energy program or microgrid.

9. The City is aware that some trees surrounding the site must be removed to accommodate a solar facility of maximum size and efficiency. Certain trees are of significant aesthetic or cultural value, and the City asks the developer to collaborate on a site review to identify trees that should be saved, if possible, during the development process.

10. The City requests an emergency egress road be considered from the northerly boundary of the site, along the westerly edge of the solar facility, to the proposed carport parking area.

11. The City is keenly interested in the integration of any advanced environmental uses or technologies, including dual-use horticulture/agriculture, water collection facilities, etc.

12. The City is willing to participate in securing any available grant funding to offset the costs of developing the facility.

ENVIRONMENTAL CONSIDERATIONS:

The RFP is not considered a "Project" pursuant to the California Environmental Quality Act (CEQA) Guidelines, Section 21065 because it does not commit the City to an activity that will cause a direct physical change in the environment or a reasonable foreseeable indirect change in the environment. Once project proposals are received, Council will evaluate proposals to determine the scope of the project and will direct staff to review the solar farm development proposal pursuant to CEQA either as a stand-alone project, or in conjunction with a draft Master Plan for the Old Airport property.

FINANCIAL CONSIDERATIONS:

The MOU between the City and SEI, in part, commits SEI to providing technical assistance and professional services with no up-front cost for the City to evaluate and purchase renewable energy and/or to install renewable energy systems. The City has agreed that the SEED Fund professional services will be reimbursed at a rate of 3.5% of the total installed value of the renewable energy project.

ATTACHMENTS:

- ✓ Draft Request for Proposals for Solar Photovoltaic Projects
- ✓ Old Airport Spec Sheet (to be attached to the RFP)

- ✓ 100% Renewables Committee Presentation Materials, January 8, 2020
- ✓ Borrego Springs: California’s first Renewable Energy-based Community microgrid

REQUEST FOR PROPOSALS
FOR
SOLAR PHOTOVOLTAIC PROJECTS
RFP #XXX-XXX

Issued by: The City of South Lake Tahoe on: MM/DD/2019

With support from: Sustainable Energy and Economic Development Fund

And on behalf of: Participating Public Agencies in El Dorado and Nevada Counties

Mandatory Pre-Proposal Meeting	8:30 AM, Pacific Time, MM/DD/2019 Location TBD
Question Deadline	5:00 PM, Pacific time, MM/DD/2019 Submit questions by email to:
Contact Person	Ray Jarvis, Public Works Director Email: rjarvis@cityofslt.us Phone: TBD Fax: TBD
Submittal Deadline	**3:00 PM, Pacific Time, MM/DD/2019** **Proposal must be submitted by this Deadline.**
Submittal Location	TBD

CONTENTS

PROJECT INFORMATION
1. Project Background and Instructions
2. RFP Process and Information
3. Submittal Requirements
4. Evaluation of Submittals
5. Terms and Conditions

ATTACHMENTS AND FORMS
A. Site Summary and Bundling Spreadsheet
B. Site Technical Overview Documents
   1. Site Specification Sheet
   2. Plan Set Sheets (where available)
   3. Geotechnical Sheets (where available)
   4. Historical Electricity Usage
C. PV System Technical Specifications and Requirements
D. Key Contract Terms and Conditions
E. Respondent Fact Sheet Form *
F. Customer References Form *
G. Pricing Proposal and Production Form *
H. Designation of Subcontractors Form *
I. Reimbursement Acknowledgement Form *
J. Non-Collusion Declaration Form *
K. Response Checklist Form *

*** Complete and return as part of Proposal**

PROJECT INFORMATION

1. PROJECT BACKGROUND AND INSTRUCTIONS

The mission of the Sustainable Energy and Economic Development Fund (SEED Fund) is to pursue regional sustainability projects, such as distributed renewable energy installations and energy efficiency improvements that create new economic activity while improving the regional environment. The primary focus of the SEED Fund program is on aggregating renewable energy and energy efficiency projects for municipalities, schools and public agencies to help reduce total energy costs while creating measurable environmental benefits. The SEED Fund also provides resources and training for stakeholders and decision-makers to build understanding, internal capabilities and engagement in sustainability issues across the regional community.

This SEED Fund Solar Photovoltaic (PV) Project represents a coalition of public entities in El Dorado and Nevada Counties that formed to pursue strategies for cost-effectively reducing greenhouse gas emissions from municipal operations. The Participating agencies ("Participants") understand that photovoltaic (PV) installations can lower facility reliance on utility-generated electricity and reduce the carbon footprint of their operations, while providing environmental leadership for the community. The primary purpose of this Request for Proposals ("RFP") is to identify qualified providers/developers of solar installations to support Participants in identifying and developing desirable, cost-effective renewable energy projects at municipal facilities.

This RFP is issued by the City of South Lake Tahoe (hereinafter "the City") on its own behalf and on the behalf of XX other participating agencies in three counties as listed below. The results of this RFP process are expressly made available to other public agencies throughout the listed counties and the state of California.

County of Nevada

- Tahoe – Truckee Sanitation Agency
- Grass Valley School District
- Nevada City School District
- Tahoe Truckee Airport District
- Tahoe-Donner Association
- City of Nevada City

County of El Dorado

- City of South Lake Tahoe
- South Lake Tahoe Public Utilities District

The scope of this RFP is to identify qualified providers of solar power for municipal facilities via on-site generation of solar PV systems ("Systems"). To provide best value to each agency, various financing options are sought so that Participants can select from appropriate choices including, but not limited to, direct purchase, power purchase agreement, and other cost-effective options.

Commented [SH1]: Agencies included here have signed MOUs

The cumulative potential capacity for solar generation across the XX sites (detailed in Attachment A) in this RFP has been estimated by independent energy consultants to be XX.XX MW for on-site distributed generation, plus an additional XX.XX MW of potential "utility-scale" capacity spread among X of those sites. These sites have undergone feasibility assessments (see Attachment B) and have been grouped into three "bundles" for purposes of streamlining response preparation and optimizing efficiencies of the proposed projects. Sites located in El Dorado County comprise one bundle, while sites in Nevada County make up a second bundle. The third bundle is a Bid Alternate list of sites in both El Dorado and Nevada Counties for possible development of "utility-scale" solar projects. No off-takers of energy production at Bid Alternate sites have been identified at this time, and proposals addressing these sites should identify proposed buyers of energy. **All sites in the El Dorado and Nevada bundles must be included in proposals for those bundles. Sites in the Bid Alternate bundle will be evaluated on a site-by-site basis and responding firms (hereinafter "Proposers" or "Respondents") need not propose on all sites in that bundle.** Proposers may provide proposals and qualifications for one, two, or all bundles and will be evaluated based on their qualifications and pricing for each bundle individually and collectively.

Commented [SH2]: Subject to change pending final site list

The City seeks proposals from qualified Proposers for the design, procurement of materials, permitting, installation, interconnection, and all associated documentation, financing, maintenance, and warranties of Solar PV Systems to be located at XX municipal facilities located within the boundaries of the Participants' jurisdictions. It is anticipated that the Systems within the scope of this project may be purchased outright by Participating Agencies or may be financed, owned, and operated by the Proposer under a Power Purchase Agreement (PPA). In relation to this RFP, the term "Proposer" shall refer to all organizational members of the responding team that will, through combined efforts and abilities, perform all aspects of solar site development.

The XX sites are divided into three separate bundles:

1. El Dorado County	**X Sites**	**~ XX.XX kW**
2. Nevada County	**X Sites**	**~ XX.XX kW**
3. Bid Alternates	**X Sites**	**~ XX.XX kW**

A full list of all sites along with key site data has been summarized and organized in Attachment A – Site Summary and Bundling Spreadsheet. Site assessments were performed by independent consultants under the SEED Fund program, and site details, including historical energy usage data, are included in Attachment B. The City and all Participants have strived to ensure that documents and information included in the RFP are accurate and complete, but errors and omissions may have occurred. The City and Participants make no representations with respect to the sites, including their suitability. Proposers take full and sole responsibility for conducting any necessary due diligence in assessing the sites and their conditions in order to develop proposals.

As noted above, Proposers may submit proposals for one, two, or all three bundles. ***When developing proposals for each bundle, the Proposer must address solar PV installations at all sites within each bundle.*** For example, any Proposer electing to submit a proposal for the El Dorado bundle must propose solar PV installations at all X sites within that bundle. Also as noted above, the exception to this

REQUEST FOR PROPOSALS: City of South Lake Tahoe RFP #XXX-XXX

requirement is the Bid Alternate bundle, for which individual sites may be proposed, and which will each be evaluated individually.

For each proposed bundle, Proposers must provide two types of pricing proposals for each site: 1) Direct Purchase, with Participant ownership of PV systems; and 2) Financed Installation, via Power Purchase Agreement, that would result in minimal to no upfront cash outlay from Participant(s). The pricing proposals must be submitted using the form(s) provided in Attachment G, which includes input cells for both direct purchase and Power Purchase Agreements and must include individual site pricing, and which may include an optional bundle discount. The bundle discount is intended to apply to all sites that proceed with contracting within the proposed bundle(s). Proposers should anticipate +/- 20% movement in solar capacity within bundles; greater movement away from bundles may understandably decrease the discount percentage, while additional capacity may be expected to increase the applicable discount. For each financing mechanism, proposals must include the construction of PV systems at all designated sites in the applicable bundle, though the City and each Participant individually maintain the right to remove or replace some or all sites from consideration.

Technical requirements: Proposers must comply with all technical requirements as specified in Attachment C and are expected to utilize industry best practices in responding to this RFP and in performing their responsibilities under a contract with the City or other Participants. Proposed pricing must reflect conformance with all technical requirements in Attachment C, and must also address foreseeable construction issues, including those identified in Attachment B and in optional site walks. Proposers will be required to acquire Building Permits and, where applicable, local business licenses, before starting construction.

Contracting and Bonding requirements: The City's General Contracting Conditions have been included in this RFP in Attachment D. For other Participants, Proposers shall assume high similarity with the City's General Contracting Conditions, though significant variations may exist. Unless stated otherwise in Attachment D, Proposers shall assume that all Participants will require Payment and Performance Bonds during construction. Key PPA terms have also been identified and included in Attachment D. These terms are expected to be acceptable to all Participants, but specific objections to these terms may be considered and negotiated at the discretion of the City or individual Participants.

Insurance requirements: The City and each Participant may have different insurance requirements, and Proposers must comply with the unique requirements applicable in each jurisdiction. Attachment D provides the City's requirements. Again, insurance requirements for other Participants can be assumed to be very similar to the City's requirements, but significant variations may exist.

Pricing and assumptions: In addition to requirements as specified in this RFP and Attachments, Proposers should use the following assumptions when providing pricing and project cash flow analysis:

1. Annual utility escalation rate assumed to be 3%
2. Electricity rate schedules may be changed for optimal savings, but only if a facility is eligible for recommended change
3. Assume construction start date of March 2020 for pricing calculations
4. Pricing must include complete design and construction of the proposed systems, with maintenance included in PPA pricing and as a separate line item for direct purchase proposals. Design shall include all aspects, including, but not limited to, structural investigation, electrical modification, and aesthetics of proposed systems.

Contract Negotiations: It is expected that the City, Participants, and Proposer(s) will commence a common process for negotiating final terms and conditions of any contracts resulting from this procurement. First, Proposers shall enter preliminary negotiations with the City, its agents, and representatives of Participant agencies to develop template contracts and terms that are acceptable or nearly acceptable for all Participants. If awarded, the second step is final negotiations that will be completed between each individual Participant and the awarded Proposers so that they can directly enter into final agreements. The process is intended to support a more effective overall process for both the Proposer and Participants while maintaining flexibility for specific conditions and circumstances at individual jurisdictions.

The Cityy and all Participants have entered this RFP with the desire to pursue solar development at their identified sites, but Proposers submitting responses to this RFP do so with the understanding that the City and each Participant do not guarantee the award of any contract or work. The City and each Participant reserve the right, in their sole and absolute discretion, to abolish, refresh, amend, or extend the scope or limitations of this Project.

Local Workforce: Participants are interested in providing benefit to the local economy through clean energy job creation. Proposers should describe their approach to maximizing local hiring, including how the process would be managed and prior experience with local hiring.

Auxiliary Benefits: The City and Participants also have interest in an energy future that may include the installation of battery storage, electric vehicle chargers, demand response/management, and energy efficiency. Proposals should note any such optional auxiliary benefits, and how they would be coordinated with solar installation. Auxiliary benefits are not required as part of any proposal but may be considered during evaluation of proposals.

2. RFP PROCESS AND INFORMATION

The RFP documents, including addenda, will be posted on the City of South Lake Tahoe website, www.cityofslt.us. To request information or be notified of any addenda, please contact Ray Jarvis at the City of South Lake Tahoe **via e-mail only** at rjarvis@cityofslt.us. Please include in your request Company Name, Contact Person, Mailing Address, valid e-mail address, and telephone number.

Enabling Legislation: Per California Government Code Section 4217.12 and related sections, public entities have the statutory authority to seek and deliver energy-related projects using a selection process defined by the individual public entity. This Request for Proposals is issued by the City of South Lake Tahoe utilizing this enabling legislation. Any Proposer who wishes to be considered for a contract with the City and other Participants must submit the required information per this RFP and conform to the process described herein.

Timeline: Following is the RFP selection process timetable, subject to change at the City's and Participants' sole discretion:

8/31/19: Request for Proposals issued
9/24/19: Mandatory pre-proposal meeting

9/24 – 9/25/19: Optional site walks
10/15/19: Deadline for Proposer Submittal of Questions
10/24/19: Final Addendum Issued
10/30/19: Deadline for Submittal of Proposals
Week of 11/18/19: Vendor Interviews
11/25/19: Select firm(s) for negotiation
December 2017: Start Contract Negotiations
January 2020: Contracts Presented to Staff, Boards, and Councils for Approval

Pre-Proposal Meeting and Site Walks: The City of South Lake Tahoe will host a mandatory pre-proposal meeting at [ADDRESS], at [TIME & DATE]. **Any Proposer wishing to submit a proposal to this RFP must attend this conference**. Immediately following the pre-proposal meeting, optional site walks will take place for sites in the El Dorado bundle. Optional site walks for sites in the Nevada County bundle will take place the following day, [DATE]. Bid Alternate sites will be included in the site visit schedule of the applicable County. A schedule of the anticipated arrival times for each site will be distributed in the pre-proposal meeting. Guided access to sites will not be available on other dates, and any attempt by a Proposer to gain access to restricted areas at sites outside of the listed times may result in disqualification of the Proposer.

Requests for Information and Clarification: Proposers may submit requests for information and clarification regarding this RFP can contact Ray Jarvis at the City of South Lake Tahoe **via e-mail only** at rjarvis@cityofslt.us. before [TIME & DATE]. All questions and Requests for information and clarification received before the stated time and date will be addressed, and responses will be issued to all parties attending the mandatory pre-proposal meeting via Addenda. All Addenda will be posted to the City of South Lake Tahoe's website. Any attempt by a Proposer to contact any other City or Participant staff member in regards to this RFP may result in disqualification of the Proposer.

RFP Due Date: The City of South Lake Tahoe shall receive, no later than [TIME & DATE], a sealed envelope or box with one (1) original signed paper version and one (1) electronic flash drive copy of the completed submittal documents as defined below. Hard copies shall be loose-leaf or compiled in a three-ring binder, with tabs between sections as called out in Section 3 of this RFP. When practical, please print double-sided and use recycled paper. Hard copy and digital copies shall be identical to each other. All materials shall be submitted to **Ray Jarvis, Public Works, [ADDRESS]**. Where noted, all responses shall utilize forms provided in this RFP.

Proposal Interviews: During the week of [DATE]., the Selection Committee may conduct individual interviews with selected Proposers. Those Proposers will comprise a Short-list of preferred vendors and will be notified of the time and exact location in advance of the interview. The Selection Committee shall be composed of City staff, representative staff from multiple Participant agencies, and SEED Fund team members. This Committee will evaluate all proposals, and members of the Committee will conduct proposal interviews.

The purpose of these interviews is to confirm information provided in proposals submitted by the Proposers, and to allow Proposers to respond to Selection Committee questions and to provide clarifications and expand

on the information provided in their proposals. Each Proposer shall have their proposed key personnel assigned to the project present as the primary representatives during this process. Presentation materials shall typically include Electronic Media (PowerPoint) and supporting materials.

Upon completion of interviews and proposal evaluations, contract negotiations with the City, its agents, and representatives of Participant agencies, as described in the Contracting part of Section 1 of this RFP, may begin. If the selected Proposer(s) are unable to effectively execute contracts with the Participants of the proposed bundle, other Proposers may be contacted in an effort to develop the proposed projects.

Award: Any contract(s) for this Project will be awarded to the qualified Proposer(s) able to effectively negotiate terms for the project(s) that provide the "best value" to the City and Participants as determined solely by the City and its agents, and by each Participant and its agents. The Selection Committee, on behalf of the City and represented Participants, reserves the right to reject any or all proposals or any part of an **individual** proposal; to waive any irregularity in any proposal and to determine which, in its sole judgment, best meets the goals of this RFP.

Confidentiality: The City and Participants are public agencies subject to the disclosure requirements of the California Public Records Act ("CPRA"). If proprietary information is contained in documents or information submitted to the City, and Proposer claims that such information falls within one or more CPRA exemptions, Proposer must clearly mark such information "Confidential and Proprietary", and identify the specific lines containing the information. In the event of a request for such information, the City and/or Participants, as applicable, will make best efforts to provide notice to Proposer prior to such disclosure. If Proposer contends that any documents are exempt from the CPRA and wishes to prevent disclosure, it shall be required to obtain a protective order, injunctive relief or other appropriate remedy from a court of law in the applicable City before City or Participant's deadline for responding to the request. If Proposer fails to obtain such remedy within City or Participant's deadline for responding to the CPRA request, then the City and/or Participant may disclose the requested information. Proposer further agrees that it shall defend, indemnify and hold City and all Participants harmless against any claim, action or litigation (including but not limited to all judgments, costs, fees, and attorneys' fees) that may result from denial by City or Participants of a CPRA request for information arising from any representation, or any action (or inaction) by the Proposer. The City and Participants reserve the right to delay production of information which would reveal the number of proposals submitted or the identities of the Proposers, as well as copies of all proposal documents, until after negotiations are completed.

Prevailing Wage Requirements and Other Requirements: Proposers are notified and informed that they will be subject to and must comply with all of the requirements under the California Labor Code to pay the general prevailing rate of per diem wages and for holiday and overtime work to all workers engaged in the performance of any work under the proposed contracts. Copies of prevailing rates of per diem wages are available from the Department of Industrial Relations, State of California. Proposer and any subcontractors shall comply with all federal, state and local laws and regulations applicable to the performance of the work hereunder, including but not limited to, the California Building Code, local building codes, utility interconnection regulations, the Americans with Disabilities Act, and any copyright, patent or trademark law. Proposer's Failure to comply with any law(s) or regulation(s) applicable to the performance of the work hereunder shall constitute a breach of contract.

The RFP specifications, terms, conditions, Attachments, and Addenda, and Proposer's proposal, in whole or in part, may be incorporated into and made a part of any contract that is awarded as a result of this RFP.

3. SUBMITTAL REQUIREMENTS

Each Proposer must conform with and be responsive to the submittals required by the City and Participants. Any deviation from the standard application forms (where applicable) or failure to provide the required information may be considered non-responsive and grounds for rejection of the proposal. The Selection Committee, on behalf of the City of South Lake Tahoe and represented Participants, may reject any or all proposals or any part of an individual proposal, or waive any irregularities in any responses received, at its sole discretion. Submittals for past projects with the City are not applicable.

Proposal submittals must be submitted as a single PDF file (with Attachment G as a separate spreadsheet file in the electronic version—see Section 8 below), and must follow the ordering format as shown below:

Section 1. Executive Summary, to include: high-level description of the project management approach, proposed PV systems, financing methods, professional background of company and project team, and description of relevant experience with equivalent projects. The completed Attachment E, Respondent Fact Sheet Form, shall also be submitted in this section.

Section 2. Description of relevant project experience for organizational team members and key personnel, both prior to and during their time at the current firm. Description of the Development Team structure, including firm address(es), contacts, and roles in the proposed project for each Development Team member.

Section 3. Minimum of five (5) references for successfully completed projects of similar size and scope. Note that City of South Lake Tahoe or its agents will contact some or all of the provided references. References shall be provided on Attachment F, Customer References Form. The City reserves the right to: (a) check all, any, or no references that the City deems necessary, to assess a firm's past performance; (b) contact all or as many references the City determines are representative projects demonstrating experience that is relevant to this scope of services; and (c) check any other reference(s) that might be indicated through the explicitly specified contacts or that result from communication with other entities involved with similar projects, including other industry sources and users of similar services known to the City. The client reference score/weight shall have no bearing on any other evaluation criteria.

Section 4. Description of plan for addressing local hiring preferences. As noted in Local Workforce part of Section 1 of this RFP, all Participants, including those without explicit local hiring policies, seek to increase local impact of municipal solar projects by maximizing the use of local workforce.

Section 5. Proof of valid and current Contractor's license. Only Proposers with a California B, C-10, and/or C-46 Contractor's license and who have been approved through this process will be eligible to contract for the Project.

Section 6. Preliminary system designs, to adhere to design specifications in Attachment C, and to include:

- Site overview with module layout, including proposed azimuth and tilt

- Product spec sheets for proposed racking, modules, inverters, and monitoring.
- Product warranty information for proposed racking, modules, and inverter.

Section 7. First-year system production estimates, as demonstrated and detailed by industry-recognized modelling tool. Production estimates shall accurately reflect location and proposed system specifications detailed in Section 6 above (components, azimuth, tilt, under-module clearance, etc.), and shall be performed for each site in the bundle(s) being proposed. A minimum of one site shall be submitted as an example of modeling tool output. Production estimates from the modeling tool must be used for completing Attachment G, as noted in Section 8 below. Additional documentation of modeling outputs may be requested to confirm methodologies and accuracy.

Section 8. Cost proposal for power purchase agreements and direct purchase of Systems, including payment of Prevailing Wages, which must be submitted on the form included as Attachment G. Pricing for 20-year Operations and Maintenance shall be included as a separate line item, which will be evaluated with and separately from the direct purchase price. Pricing must include all aspects of providing a turn-key PV system and must address the requirements in Attachment C and foreseeable contracting and site conditions, including, but not limited to, those identified in Attachments B and D, site walks, and RFP Addenda. Pricing for PPA proposals must also include a SEED Fund reimbursement payment equal to 3.5% of proposed purchase price for each site. This reimbursement payment is explained in Section 5 of this RFP, in Attachment I, and in Section 15 below, and must be made available to Participants upon issuance of Notice to Proceed on Construction, for PPA projects only. Pricing for direct purchase should NOT include this reimbursement. Attachment G also requires the input of proposed system components and projected solar generation, which must match production modeled as described in Section 7 above. In the electronic submittal, Attachment G must be included in Microsoft Excel spreadsheet format (.xls or .xlsx).

Section 9. If applicable, alternative financing option(s) beyond PPA and direct purchase. Describe terms and conditions and indicate costs and benefits to Participants of proceeding with alternative financing. If not applicable, state "Not Applicable".

Section 10. Financial analysis of impact of proposed PV development on current facility electricity bills and/or cash flows for all sites in the bundle, and for all proposed financing methods. See Attachment B for historical energy usage information. See Pricing and Assumptions part of Section 1 of this RFP for additional information for developing pro forma financial analyses.

Section 11. Project schedule for the proposed bundle or bundles, assuming contract signing on [DATE]. The schedule must also be submitted electronically as part of the main PDF file.

Section 12. If applicable, alternative energy solutions other than, or in addition to, systems complying with specifications of Attachment C. If not applicable, state "Not Applicable".

Section 13. Description of auxiliary benefits, beyond solar energy, offered as part of the Proposal. If not applicable, state "Not Applicable".

Section 14. Template PPA contract and all related contracts and attachments for review by the Selection Committee. Selection of a preferred vendor shall in no way imply acceptance of provided template contracts.

Section 15. Signed Designation of Subcontractors Form (Attachment H), Reimbursement Acknowledgment Form for PPA contracts (Attachment I), and Non-Collusion Declaration Form (Attachment J). Insert additional sheets for listing exceptions or comments to Key Contract Terms and Conditions (Attachment D), Reimbursement Acknowledgement Form (Attachment I), or any other part of this RFP. Exceptions may result in the Selection Committee finding the Proposal non-responsive.

Commented [SH3]: Attachment H & Attachment J have been used in past SEED Rounds, City can use or replace with their own standard forms.

Section 16. Completed and signed Attachment K, Response checklist.

Section 17. Additional supporting documents and financial information. Documents inserted here shall include: indications of financial strength of Proposer and partner firms; indications of strength of proposed component manufacturers; explanations of judgments and pending lawsuits against the Proposer and partner firms; and any other documentation needed to clarify or augment the proposal.

Cost of Proposal Development: City and Participants shall not bear any financial responsibility for costs incurred by the Proposer in responding to this RFP or any subsequent proposal, whether or not the Proposer's proposal is successful, including the costs for bonding, legal costs for any reason, visitation costs, reproduction, postage/mailing and other related costs.

4. EVALUATION OF SUBMITTALS

Requirements for Qualifications: The RFP evaluation is solely for the purpose of determining which Proposers are deemed responsible, qualified, and able to offer the best value to participants. Qualifications of applicants will be reviewed and determined by the City, Participants, and their representatives based upon the submitted documents and any other information available to them. Applicants may be asked to submit additional information pertinent to the Projects, or to be present for an interview. The City of South Lake Tahoe and Participants also reserve the right to investigate and rely upon information from other available sources in addition to any documents or information submitted by the Proposer.

The Selection Committee, on behalf of the City of South Lake Tahoe and represented Participants, retains the sole discretion to determine issues of compliance and to determine whether a Proposer is responsive and responsible. The City of South Lake Tahoe and represented Participants will determine a Proposer's quality, fitness and capacity to perform projects satisfactorily. Each submittal will be judged as a demonstration of the Proposer's capabilities of delivering the services requested with high quality and low total lifetime costs. Evaluation of the responses will be based on a competitive selection process, in which the evaluation of proposals will not be limited to price alone. The Selection Committee's decision will be based on the evaluation of several factors including but not limited to the following:

Proposer Qualifications & Experience (20 points)

- Strength of qualifications and experience of partner firms and key personnel
- Strength of project references with regards to customer satisfaction, completion of projects equivalent to those included in this RFP, and success in maintaining project budgets and schedules
- Financial stability and proof of funding for these projects with proven financing track record

Technical Proposal (20 points)

- Preliminary system design is appropriate for site needs and accounts for site condition

- Module, inverter, racking, and monitoring components are high-quality, available, and have strong track record and warranty coverage, with stable and financially strong manufacturers
- Projected energy production is realistic and appropriate for each facility

Project Costs (40 points)

- PPA levelized cost of energy over 20-year contract term
- Direct Purchase cost
- Operations & Maintenance costs over first 20 years of system life
- Financial analysis of total system costs and benefits, including possible rate schedule changes

Implementation Plan and Schedule (15 points)

- Project schedule is realistic and accounts for phased construction on multiple projects
- Proposal is complete and addresses requirements and preferences stated in the RFP, addresses local workforce preferences, demonstrates experience working with public agencies, and, optionally, may offer auxiliary benefits

Contract Terms & Conditions (5 points)

- Ability to work with desired Participant Terms and Conditions

The Selection Committee will develop preliminary scores, which will then be augmented for short-list Proposers during or after Proposer interviews. The Proposer with the highest consensus score for each bundle will enter into contract negotiations with the City, its agents, and representative members of Participant agencies.

Proposers are urged to review evaluation factors listed above and tailor the response in order to provide clarity in all areas including, but not limited to, financial options and cash flow analysis, technical design, projected system production, warranties, performance guarantees, and company experience.

5. TERMS AND CONDITIONS

If there are any conflicts between the terms and conditions of the RFP and any applicable federal or local law or regulation, or any ambiguity related thereto, then the provisions of the applicable law or regulation shall control and it shall be the responsibility of the Proposer to ensure compliance.

SEED Fund reimbursement: The City, Participants and SEED Fund have spent significant time, effort and cost to evaluate solar potential on their facilities and pursue the development of solar projects with successful Proposers under a revolving fund grant. Further, the stated purpose of the SEED Fund is to enable ongoing development of renewable energy and energy efficiency projects across the region. Therefore, with contracts in place, the Participants will be reimbursing the SEED Fund at the rate of 3.5% of the total project value in current dollars. Successful Proposers are requested to build this reimbursement into their proposals (PPA pricing only) and reimburse Participating agencies once construction has been authorized. By signing Attachment I, Proposers acknowledge that they have seen and agreed to this request.

Public Appropriations: All participants are public agencies and, as such, are subject to annual review and approval of expenditures and appropriation of funds for capital projects and operational expenses including, but not limited to, new construction, facilities, staffing, energy, and operations. While it is not the intent of any Participant to withhold payments or terminate operations, this may occur due to unforeseen events. Therefore, Proposer PPAs may be required to include appropriate terms and conditions to accommodate the potential for this to occur, as required by public law.

Additional contract terms and conditions are provided in Attachment D that must be reviewed by Proposers and addressed in their proposals.

Public Opening: Bids will be publicly opened immediately after the Submittal Deadline at the [ADDRESS]. Proposals will be available to the public for review only after award of contract.

Multiple Offers Not Allowed: Only one Proposal will be accepted from any one person, partnership, corporation or other entity; however, alternative proposals may be included in one Proposal.

Late Responses: Proposals received after the Submittal Deadline may not be considered for award and will be returned to Respondents unopened. Respondent is responsible for the timely and correct delivery of his Proposal.

Reservations: At its sole discretion, City reserves the right to take the following actions any time and for its own convenience:

- Reject any and all Proposals, without indicating any reasons for such rejection.
- Waive or correct any minor or inadvertent defect, irregularity or technical error in any Proposal or procedure, as part of the Proposal or any subsequent negotiation process.
- Withdraw this RFP and issue a new Request for Proposals anytime thereafter.
- Procure any materials or services specified in the RFP by other means.
- Extend any or all deadlines specified in the RFP, including deadlines for accepting proposals, by issuance of an Addendum at any time prior to the deadline for receipt of responses to the RFP.
- Disqualify any Respondent on the basis of any real or perceived conflict of interest or evidence of collusion that is disclosed by the RFP or other data available to the City. Such disqualification is at the sole discretion of the City.
- Reject the Proposal of any Respondent that is in breach of or in default under any other agreement with the City.
- Reject any Respondent deemed by the City to be non-responsive, unreliable, or unqualified.

Withdrawals of Proposals: By formal written notice, Respondent's Authorized Representative may modify or withdraw his Proposal before the Submittal Deadline. Proposals not withdrawn before the Submittal Deadline will become the property of the City.

Interpretation: Should any discrepancies or omissions be found in the Proposal, or doubt as to its meaning, the Respondent shall notify the City in writing at once (e-mail is acceptable). The City may issue written

instructions or addenda to all participants in this RFP process. No oral statement of interpretation by City staff or SEED Fund team shall be binding. Questions must be received at least seven (7) days before RFP closing date. All addenda issued may be incorporated into the Contract.

Compliance with Laws: Proposer shall comply with all applicable federal, state and local rules, regulations and laws.

Inclusion of Documents: This RFP, all addenda, and successful proposal may be incorporated as part of any final Contract.

Invoices: Proposer shall itemize all applicable service and labor charges on its invoices, which shall be transmitted by the Proposer to the contracting department. Each invoice must clearly identify the following information:

- City Contract or Purchase Order Number
- Service location
- Time and date ofservice
- Signature of Department Contact, or designee

Off-Shore Outsourcing of Services: Proposer certifies that any services performed on any purchase order or contract with the City of South Lake Tahoe by Proposer will be performed solely by workers within the United States.

Severability: Should any part of the Contract be held to be invalid, illegal, or unenforceable in any respect, such invalidity, illegality, or unenforceability shall not affect the validity of the remainder of the Contract which shall continue in full force and effect; provided that the remainder of the Contract can, absent the excised portion, be reasonably interpreted to give effect to the intentions of the parties.

Controlling Law: The Contract shall only be governed and construed in accordance with the laws of the State of California and the City of South Lake Tahoe, and proper venue for legal action regarding the Contract shall only be in the County of El Dorado, except for specific contracts signed with entities outside of the County El Dorado.

Amendment: Amendment to or modification of the terms and conditions of the Contract shall be effective only upon the mutual consent in writing by the parties hereto.

Indemnity and Insurance Requirements: Certificates of Insurance for Liability, Automobile, and Worker's Compensation must be provided to the City of South Lake Tahoe, General Services Department, Purchasing Division, before contract is signed and must remain in effect throughout the entire term of the Contract; reference Exhibit D.

The City reserves the right to withhold payments to Proposer or cancel contract in the event of non-compliance with the insurance requirements outlined above.

Equal Employment Opportunity: During and in relation to the performance of this Agreement, Proposer agrees as follows:

A. The Proposer shall not discriminate against any employee or applicant for employment because of race, color, religion, national origin, ancestry, physical or mental disability, medical condition (cancer related), marital status, sexual orientation, age (over 18), veteran status, gender, pregnancy, or any other non-merit factor unrelated to job duties. Such action shall include, but not be limited to, the following: recruitment; advertising, layoff or termination; rates of pay or other forms of compensation; and selection for

training (including apprenticeship), employment, upgrading, demotion, or transfer. The Proposer agrees to post in conspicuous places, available to employees and applicants for employment, notice setting forth the provisions of this non-discrimination clause.

B. If this Agreement provides compensation in excess of $50,000 to Proposer and if Proposer employs fifteen (15) or more employees, the following requirements shall apply:

(1) The Proposer shall, in all solicitations or advertisements for employees placed by or on behalf of the Proposer, state that all qualified applicants will receive consideration for employment without regard to race, color, religion, national origin, ancestry, physical or mental disability, medical condition (cancer related), marital status, sexual orientation, age (over 18), veteran status, gender, pregnancy, or any other non-merit factor unrelated to job duties. Such action shall include, but not be limited to, the following: recruitment; advertising, layoff or termination; rates of pay or other forms of compensation; and selection for training (including apprenticeship), employment, upgrading, demotion, or transfer. In addition, the Proposer shall make a good faith effort to consider Minority/Women/Disabled Owned Business Enterprises in Proposer's solicitation of goods and services. Definitions for Minority/Women/Disabled Business Enterprises are available from the City [INSERT DEPARTMENT].

(2) In the event of the Proposer's non-compliance with the non-discrimination clauses of this Agreement or with any of the said rules, regulations, or orders said Proposer may be declared ineligible for further agreements with the City.

(3) The Proposer shall cause the foregoing provisions of this Subparagraph B to be inserted in all subcontracts for any work covered under this Agreement by a subcontractor compensated more than $50,000 and employing more than fifteen (15) employees, provided that the foregoing provisions shall not apply to contracts or subcontracts for standard commercial supplies or raw materials.

Independent Contractor Status: Proposer and City have reviewed and considered the principal test and secondary factors below and agree that Proposer is an independent contractor and not an employee of City. Proposer is responsible for all insurance (workers' compensation, unemployment, etc.) and all payroll related taxes. Proposer is not entitled to any employee benefits. The City agrees that Proposer shall have the right to control the manner and means of accomplishing the result contracted for herein.

A. Principal Test: The Proposer rather than City has the right to control the manner and means of accomplishing the result contracted for.

B. Secondary Factors: (a) The extent of control which, by agreement, City may exercise over the details of the work is slight rather than substantial; (b) Proposer is engaged in a distinct occupation or business; (c) In the locality, the work to be done by Proposer is usually done by a specialist without supervision, rather than under the direction of an employer; (d) The skill required in the particular occupation is substantial rather than slight; (e) The Proposer rather than the City supplies the instrumentalities, tools and work place; (f) The length of time for which Proposer is engaged is of limited duration rather than indefinite; (g) The method of payment of Proposer is by the job rather than by the time; (h) The work is part of a special or permissive activity, program, or project, rather than part of the regular business of City; (i) the Proposer and City believe they are creating an independent contractor relationship rather than an employer-employee relationship; and (j) the City conducts public business.

It is recognized that it is not necessary that all secondary factors support creation of an independent contractor relationship, but rather that overall there are significant secondary factors that indicate that Proposer is an independent contractor.

Retention and Audit of Records: Proposer shall retain records pertinent to this Agreement for a period of not less than five (5) years after final payment under this Agreement or until a final audit report is accepted by the City, whichever occurs first. Proposer hereby agrees to be subject to the examination and audit by the City of South Lake Tahoe Clerk, the Auditor General of the State of California, or the designee of either for a period of five (5) years after final payment under this Agreement.

Presentation of Claims: Presentation and processing of any or all claims arising out of or related to any Agreement shall be made in accordance with the provisions contained in [CITY SPECIFIC CODE, IF APPLICABLE], which by this reference is incorporated herein.

Commented [SH4]: Relic language from past SEED Round, can be removed or replaced with City specific process and language.

Data Security and Privacy – Protected Information: Proposer acknowledges that its performance of services or activities under this Agreement may involve access to confidential information including, but not limited to, personally-identifiable information, protected health information, or individual financial information (collectively, "Protected Information") that is subject to state or federal laws restricting the use and disclosure of such information. Proposer agrees to comply with all applicable federal and state laws restricting the access, use and disclosure of Protected Information.

A. Proposer agrees to hold the City's Protected Information, and any information derived from such information, in strictest confidence. Proposer shall not access, use or disclose Protected Information except as permitted or required by the Agreement or as otherwise authorized in writing by the City, or applicable laws.

B. Proposer agrees to protect the privacy and security of Protected Information according to all applicable laws and regulations, by commercially acceptable standards, and no less rigorously than it protects its own confidential information, but in no case less than reasonable care. Proposer shall implement, maintain and use appropriate administrative, technical and physical security measures to preserve the confidentiality, integrity and availability of the Protected Information.

C. Within 30 days of the termination, cancellation, expiration or other conclusion of the Agreement, Proposer shall return the Protected Information to the City unless the City requests in writing that such data be destroyed. Proposer shall certify in writing to the City that such return or destruction has been completed.

D. Proposer agrees to include the requirements contained in paragraphs (A) through (D) inclusive, in all subcontractor contracts providing services under this Agreement

Protests and Appeals Procedures

1. Protests to the Purchasing Director

Any actual or prospective bidder, offeror or Proposer who is allegedly aggrieved in connection with the solicitation or award of a contract, other than a bid protest, may protest to the Purchasing Director. The protest shall be submitted in writing to the Purchasing Director (Purchasing Agent) within five (5) working days after notification of the recommendation of award.

2. Decision of the Purchasing Director

The Purchasing Director shall issue a written decision within ten (10) working days after receipt of the protest. The decision shall:

(a) State the reason for the action taken;
(b) Inform the protestant that a request for further administrative appeal of an adverse decision must be submitted in writing to the Clerk of the City Council within seven (7) working days after receipt of the decision made by the Purchasing Director. However, if the underlying protested award is not subject to approval by the City Council (contracts for services for up to $15,000), then the Purchasing Director's decision shall be final.

The Purchasing Director shall discuss with City Attorney l all protests prior to issuing a written decision.

3. Protests and Appeals to the City Council

(a) If permitted under Section 2(b) above, the decision of the Purchasing Director may be appealed to the City Council.

(b) Any actual or prospective bidder, offeror or Proposer who is allegedly aggrieved may protest a bid to the City Council.

4. Time Limits for Filing Protests and Appeals to the City Council

Protests and appeals to the City Council must be filed no later than ten days after the date of the decision being protested or appealed. The City shall be considered an interested party. When the appeal period ends on a day when the City offices are not open to the public for business, the time limits shall be extended to the next full working day.

5. Content of Protest and Appeal; Stay of Award

Any appeal or protest shall be filed in writing with the Clerk of the City Council and shall state, as appropriate, any of the following:

A determination or interpretation is not in accord with the purpose of these procedures or Municipal Code;
There was an error or abuse of discretion;
The record includes inaccurate information; or
A decision is not supported by the record.

In the event of a timely appeal before the City Council under this Section, the City shall not proceed further with the solicitation or with the award of the contract until the appeal is resolved, unless the City Manager, in consultation with City Attorney, the Purchasing Director, and the using department, makes a written determination that the award of the contract without delay is necessary to protect a substantial interest of the City.

6. Protest and Appeal Procedure

(a) Hearing Date. A hearing before the Board shall be scheduled within thirty days of the City's receipt of a protest or appeal unless the protestor and City both consent to a later date.
(b) Notice and Public Hearing. The hearing shall be a public hearing. Notice shall be mailed or delivered to the protestor not later than ten days before the scheduled hearing date.
(c) Hearing. At the hearing, the Board shall review the record of the process or decision, and hear oral explanations from the protestor and any other interested party.
(d) Decision and Notice. After the hearing, the Board shall affirm, modify or revise the original decision. When a decision is modified or reversed, the Board shall state the specific reasons for modification or reversal. The Clerk of the Board of Supervisors shall mail notice of the Board decision. Such notice shall be mailed to the protestor within five working days after the date of the decision, and to any other party requesting such notice

(e) A decision by the Board shall become final on the date the decision is announced to the public.

ATTACHMENT C
PV System Technical Specifications and Requirements

Table of Contents

1. Site Access 2
2. Project Management 2
2.1 Project Manager 2
2.2 Project Schedule 2
2.3 Submittals 2
2.4 Solar Incentives 3
2.5 Interconnection 3
3. System Design 4
3.1 Design Review Process/ Phases 4
3.2 Proposers' License Classification 4
3.3 Design Submittals 4
3.4 Permits and approvals 5
3.5 Technical Requirements 5
3.6 Warranties 11
4. Procurement/Construction 11
4.1 Tree Removal 11
4.2 Line Location 11
4.3 Quality Control 11
4.4 Removal and Remediation 12
5. Testing and Commissioning 12
5.1 Acceptance Testing 12
5.2 Proving Period (30 days) 13
5.3 Close-out Documentation Requirements 14
5.4 Training 14
6. Operations and Maintenance 15
6.1 Preventive Maintenance 15
6.2 Troubleshooting, Inspection and Additional Repairs 16
6.3 Customer Service Support 16
6.4 Major Component Maintenance and Repair 16
6.5 Other System Services 16

1. Site Access

Proposer shall conform to all County, City, or Agency rules and requirements for accessing sites. The County, City, or Agency or the applicable Authority Having Jurisdiction may regulate road usage, road closures, number of vehicles, access points, etc. Site visits shall be approved and proper check-in requirements must be followed. Proposer shall provide signage and/or electronic notification of possible operational impacts upon County, City, or Agency request. Unless otherwise determined by County, City, or Agency, Proposer shall be responsible for providing bathroom and storage facilities for all workers on-site, and shall be responsible for procuring, installing, securing, and removing temporary security fencing and scaffolding.

2. Project Management

2.1 PROJECT MANAGER

Proposer shall assign a Project Manager from their firm upon execution of the Agreement and receipt of Notice to Proceed. The Project Manager shall ensure that all contract, schedule, and reporting requirements of the Project are met and shall be the primary point of contact for the County, City, or Agency.

2.2 PROJECT SCHEDULE

A Project Schedule is to be prepared and submitted to the County, City, or Agency within 10 days of Agreement execution. The County, City, or Agency will review and approve the Project Schedule prior to the initiation of work. Updates shall be submitted every other week, though the County, City, or Agency may allow less frequent updates at their discretion. The submittal shall be a Critical Path Method (CPM) schedule describing all Project activities including design, equipment procurement, construction, and commissioning.

The following Mandatory Milestones shall be reflected in the schedule and where applicable, represents the dates upon which each milestone is to be achieved for all sites in the Agreement.

Mandatory Milestones

Mandatory Milestone	Date
50% Schematic Design submittal	6/12/15
90% Design Development submittal	6/26/15
100% Construction Documents submittal for permitting	7/2/15
Approved Construction Documents	7/12/15
Notice to Proceed	7/13/15
Mobilization	7/20/15
Substantial Completion	8/7/15
Final Completion	8/14/15

2.3 SUBMITTALS

Proposer shall provide the following submittals as part of the performance of the Work. The cost of developing and providing submittals shall be included in the Project price.

Agreement Submittals

Submittal	Submittal Date	Exhibit D.1 Section
I. System Design		TBD
a. System Design Documentation	At each design milestone	TBD
b. Warranties	At Construction Documents milestone	TBD
c. Testing Plan	At Construction Documents milestone	TBD
d. Power production modeling	At Construction Documents milestone	TBD
II. Procurements and Construction		TBD
a. Safety Plan	30 days before commencement of construction	TBD
b. As-built Documentation	After completion of Proving Period	TBD
III. Testing		TBD
a. Acceptance Test Results	After Acceptance Test	TBD
b. Startup Test Results	After Startup Test	TBD
c. Monitoring Data (Proving Period)	Continually throughout Proving Period	TBD
d. Proving Period Report	30 days after System Startup	TBD
IV. Training		TBD
a. Training Materials	30 days before Training Session	TBD
b. Monitoring Manual	30 days before Training Session	TBD
c. Operations & Maintenance Manual	30 days before Training Session	TBD

2.4 SOLAR INCENTIVES

Where applicable, Proposer shall submit applications for all available energy incentives or, should the County, City, or Agency already have submitted such applications, assume responsibility for all future requirements (agreements, submittals, etc.) related to these programs. This includes actions necessary to ensure compliance with the Utility net metering program and all interconnection agreements and related documents for County, City, or Agency participation and utilization of the benefits of each applicable program. Proposer shall attend all site verification visits conducted by the applicable public utility or Governmental Authority and shall assist the County, City, or Agency in satisfying the requirements of the incentive program. Proposer shall be responsible for providing updated documentation to incentive program administrators throughout the project, as required by rules of the relevant incentive programs. Incentives shall be paid to the Proposer.

2.5 INTERCONNECTION

Proposer shall be responsible for preparing, submitting, and procuring interconnection application through appropriate utility and department. Proposer shall accept responsibility for payment for utility interconnection studies and/or project management that are not anticipated but may be required. All anticipated utility work (e.g. transformer installation, meter addition) shall be the responsibility of the Proposer. At project completion, Proposer shall confirm Permission To Operate with the utility, and shall verify most financially-beneficial rate schedule and billing for the County, City, or Agency.

Proposer must comply with all interconnection requirements. Systems installed as part of this project will take advantage of Net Energy Metering (NEM), unless specified otherwise by County, City, or Agency or its agents. Proposer shall be responsible for ensuring the system design and interconnection qualifies for NEM, as applicable.

3. System Design

3.1 DESIGN REVIEW PROCESS/ PHASES

The County, City, or Agency will review and approve design documentation based on the requirements in this RFI and as detailed in Section 3.3 of this document. The County, City, or Agency may request additional documents as needed. Prior to the first design submission, the Proposer and County, City, or Agency shall agree upon precise organization and format of the design submittals. The County, City, or Agency will review all submittals, provide written comments, and conduct Design Review Meetings for each stage of the process. Proposer shall provide additional detail, as required, at each successive stage of the Design Review. Proposer shall not order equipment and materials until Schematic Design submittals have been approved. Proposer shall not begin construction until Construction Documents have been approved and all required permits have been obtained. The County, City, or Agency will formally approve, in writing, each phase of the design and is the sole arbiter of whether each phase of the design has been completed. The Proposer shall not enter a subsequent design phase without the approval of the County, City, or Agency.

Proposer is responsible for providing designs approved by the appropriate professional engineers registered in the State of California. Costs for engineering reviews and approvals shall be borne by the Proposer. System designs must take into account County, City, or Agency aesthetic issues and not conflict with any current County, City, or Agency operations.

3.2 PROPOSERS' LICENSE CLASSIFICATION

The County, City, or Agency requires that Respondents possess, at the time of submission of a Proposal, at the time of award of the Agreement and at all time during construction activities, a General Contractor License (B), Electrical Contractor License (C-10), or Solar Contractor License (C-46). It shall be acceptable for a Respondent that does not possess a C-10 or C-46 License to list a Subcontractor with a C-10 or C-46 License.

3.3 DESIGN SUBMITTALS

3.3.1 Plan Set

Proposer shall prepare a comprehensive submittal package for each phase of the Work that will be reviewed and approved by the County, City, or Agency. At a minimum, each submittal package shall include the elements required to convey in sufficient detail the following for each phase of the design:

- Site Layout Drawings, with distances from roof edges and existing equipment, as applicable
- Construction Specifications (trenching, mounting, etc.)
- Equipment Layout Drawings
- Electrical Single-Line Diagram
- Module Stringing Diagrams
- Electric Wire and Conduit Schedule
- Electrical Warning Labels & Placards Plans
- Network Connection Diagrams

- Architectural Drawings
- Structural/Mechanical Drawings
- Manufacturer's Cut Sheets with Equipment Specifications
- Data Acquisition System (DAS) Specifications, Cut Sheets, and Data Specifications

Proposer shall include adequate time for County, City, or Agency review and approval of submittals, as well as re-submittals and re-reviews. Minimum County, City, or Agency review time shall be seven (7) days from the date of receipt of each submittal package during each phase of the Design Review.

3.3.2 Production Modeling

Production modeling of the PV systems shall be performed using HelioScope, System Advisor Model (SAM), PVSYST, or equivalent modeling software using TMY3 weather data for the location closest to the site. The simulations shall accurately simulate energy production for proposed system layouts, sizes, and orientation. It is critical that PV production models are accurate with all methodology and assumptions described. The County, City, or Agency will independently verify production models are accurate to the designed systems and utilize simulation results for economic evaluations. Proposer shall be responsible for updating the production models each time sufficient changes are made to the proposed system designs that will impact production.

Proposer shall avoid excessive shading on modules to the extent possible. Where shading losses are encountered, Proposer shall perform a shading analysis justifying the basis for their design and explaining why shading does not create an adverse performance and/or economic impact.

3.4 PERMITS AND APPROVALS

Construction Documents must be reviewed and approved by all authorities having jurisdiction (AHJs) over the work, which may include, but are not limited to: the County, City, or Agency, the City or County in which the work is being done, and the utility. Proposer shall be responsible for obtaining all approvals and shall account for permitting and inspection requirements in their system designs, project pricing, and schedule. Proposer shall attend all site verification visits conducted by the applicable public utility or Governmental Authority, including any special inspections for trenching, rebar, concrete, welding, and roof attachment work, according to AHJ requirements. The County, City, or Agency will not grant Proposer relief based on Proposer's incomplete or incorrect understanding of permitting and approval requirements.

3.5 TECHNICAL REQUIREMENTS

3.5.1 General Considerations

All documentation and components furnished by Proposer shall be developed, designed, and/or fabricated using high quality design, materials, and workmanship meeting the requirements of the County, City, or Agency and all applicable industry codes and standards. The installations shall comply with at least, but not limited to, the latest approved versions of the International Building Code (IBC), National Electrical Code (NEC), Utility Interconnection Requirements, California Building Standards Commission Codes, and all other federal, state, and local jurisdictions having authority.

3.5.2 Electrical Design Standards

The design, products, and installation shall comply with at least, but not limited to, the following electrical industry standards, wherever applicable:

- Illumination Engineering Society of North America (IESNA) Lighting Standards
- Institute of Electrical and Electronics Engineers (IEEE) Standards
- National Electrical Manufacturers Association (NEMA)
- Underwriters Laboratories, Inc. (UL)
- National Fire Protection Association (NFPA)
- California Public Utility Commission (CPUC) and Utility Requirements
- American National Standards Institute (ANSI)
- Occupational Health and Safety Administration (OSHA)
- International Code Council (ICC) Codes
- California Building Standards Commission (BSC) Codes

3.5.3 Modules

In addition to the above, the PV modules proposed by Proposer shall comply with at least, but not limited to, the following:

- IEEE 1262 "Recommended Practice for Qualifications of Photovoltaic Modules".
- System modules shall be UL1703 listed and CEC listed.
- Modules shall be new, undamaged, fully warranted without defect.
- If PV modules using hazardous materials are to be provided, then the environmental impact of the hazardous material usage must be disclosed, including any special maintenance requirements and proper disposal/recycling of the modules at the end of their useful life.

3.5.4 Inverters

In addition to the above, inverters proposed by Proposer must comply with at least, but not limited to the following:

- Inverters shall be suitable for grid interconnection and shall be compliant with all Utility interconnection requirements.
- IEEE 929-2000 – "Recommended Practice for Utility Interface of Photovoltaic Systems".
- Inverters shall be UL 1741 and IEEE 1547 compliant.
- Inverters shall be CEC-listed with an efficiency of 95.5% or higher.
- Inverters must automatically reset and resume normal operation after a power limiting operation.
- Inverters shall be sized to provide maximum power point tracking for voltage and current range expected from PV array for temperatures and solar insolation conditions expected for Project conditions.
- Enclosures shall be rated NEMA 3R when the inverter is located outdoors. For outdoor installations in corrosive environments, NEMA 4X series 300 stainless steel enclosures must be used.

- Inverter selection shall take into account anticipated noise levels produced and minimize interference with County, City, or Agency activities.

3.5.5 Electrical Balance of System Components

- Each proposed PV system shall include, at a minimum, one fused DC disconnect and one fused AC disconnect for safety and maintenance concerns.
- String combiner boxes shall be arc-fault-detecting, load-break, disconnecting types, such that opening the combiner boxes shall break the circuit between combiner box feeders and inverters.
- All wiring materials and methods must adhere to industry-standard best practices, and all inter-module connections must require the use of a specialized tool for disconnecting.

3.5.6 Mounting Systems

The mounting systems shall be designed and installed such that the PV modules may be fixed or tracking with reliable components proven in similar projects, and shall be designed to resist dead load, live load, corrosion, UV degradation, wind loads, and seismic loads appropriate to the geographic area over the expected 25-year lifetime. Proposer shall conduct an analysis, and submit evidence thereof, including calculations, of each structure affected by the performance of the scope described herein, and all attachments and amendments. The analysis shall demonstrate that existing structures are not compromised or adversely impacted by the installation of PV, equipment, or other activity related to this scope. Mounting systems must also meet the following requirements at a minimum:

- All structural components, including array structures, shall be designed in a manner commensurate with attaining a minimum 25-year design life. Particular attention shall be given to the prevention of corrosion at the connections between dissimilar metals.
- Thermal loads caused by fluctuations of component and ambient temperatures shall be accounted for in the design and selection of mounting systems such that neither the mounting system nor the surface on which it is mounted shall degrade or be damaged over time.
- Each PV module mounting system must be certified by the module manufacturer as (1) an acceptable mounting system that shall not void the module warranty, and (2) that it conforms to the module manufacturer's mounting parameters.
- For unframed modules, bolted and similar connections shall be non-corrosive and include locking devices designed to prevent twisting over the 25-year design life of the PV system.
- Proposer shall utilize tamper-resistant PV module-to-rack fasteners for all PV module mounting.
- Final coating and paint colors shall be reviewed and approved by the County, City, or Agency during Design Review.
- Painting or other coatings must not interfere with the grounding and bonding of the array.

3.5.7 Corrosion Control

In addition to the above, Corrosion Control proposed by Proposer must comply with at least, but not limited to the following requirements:

- Fasteners and hardware throughout system shall be stainless steel or material of equivalent corrosion resistance

- Racking components shall be anodized aluminum, hot-dipped galvanized steel, or material of equivalent corrosion resistance
- Unprotected steel not to be used in any components
- Each PV system and associated components must be designed and selected to withstand the environmental conditions of the site (e.g., temperatures, winds, rain, flooding, etc.) to which they will be exposed.

3.5.8 Roofing Requirements

The installation of PV modules, inverters and other equipment shall provide adequate room for access and maintenance of existing equipment on the building roofs. A minimum of three feet of clearance will be provided between PV equipment and existing mechanical equipment and other equipment mounted on the roof. Clearance guidelines of the local fire marshal shall be followed. The installation of solar systems will be reviewed for code compliance and adherence to the *State Fire Marshal Solar Photovoltaic Installation Guideline*. The PV equipment shall not be installed in a way that obstructs airflow into or out of building systems or equipment.

Proposed roof top mounted systems may be ballasted or penetrating systems and must meet or exceed the following requirements:

- Systems shall not exceed the ability of the existing structure to support the entire solar system and withstand increased wind uplift and seismic loads. The capability of the existing structure to support proposed solar systems shall be verified by Proposer prior to design approval.
- Roof penetrations, if part of the mounting solution, shall be kept to a minimum.
- Proposer shall perform all work so that existing roof warranties shall not be voided, reduced, or otherwise negatively impacted. As part of the design submittals, Proposer shall include signed certificates from the roofing manufacturer stating:
    - The roofing contractor is certified installer of Complete Roofing System.
    - The manufacturer's Technical Representative is qualified and authorized to approve project.
    - Project Plans and specs meet the requirements of the warranty of the Complete Roofing System for the specified period.
    - Existing warranty incorporates the new roofing work and flashing work.
- No work shall compromise roof drainage, cause damming or standing water or cause excessive soil build-up.
- All materials and/or sealants must be chemically compatible.
- All penetrations shall be waterproofed.
- County, City, or Agency shall approve in writing the detail(s) for the sealing of any roof penetrations, as part of system design review and approval. Approval must be made prior to Proposer proceeding with work. The County, City, or Agency will also make available the manufacturer for the existing roof in consultation with Proposer as part of the design process.
- Proposer is responsible for remediating any damage to roofing material during installation of solar systems.

3.5.9 Shade Structure Requirements

Intentionally left blank.

3.5.10 Ancillary Equipment Enclosures

Proposer will be responsible for incorporating the following elements in the design and construction of the System:

- Location: all ancillary equipment shall be located in a manner that minimizes its impact to normal County, City, or Agency operations and minimizes the visual impacts to the site.

3.5.11 Placards and Signage

- Placards and signs shall correspond with requirements in the National Electric Code and the interconnecting utility in terms of appearance, wording, and placement.

- Permanent labels shall be affixed to all electrical enclosures, with nomenclature matching that found in As-Built Electrical Documents.

3.5.12 Infrastructure for Ground Mount Systems

Intentionally left blank.

3.5.13 Wiring and Cabling Runs

- Proposer shall install all AC conductors in conduit.
- Conduit installed on building roofs shall be installed in a manner to reduce visibility. Any conduit penetrations through roof surfaces shall not be made within one (1) foot of the roof edge to reduce visibility. If conduit is installed on the exterior face of any building, it shall be painted to match the existing building color. In all cases, the visible impact of conduit runs shall be minimized and the design and placement of conduit shall be reviewed and approved by the County, City, or Agency as part of Design Review.
- All exposed conduit runs over 100-feet in length or passing over building connection points shall have expansion joints to allow for thermal expansion and building shift.
- Design Builder shall install and secure the exposed string cable homeruns along the beams or structure where any combiner box is installed.
- All exposed string wiring must be installed above the lower surface of the racking members. Wire loops under framing members are not acceptable.
- Acceptable wire loss in DC circuits is < 1.5% and acceptable wire loss in AC circuits is < 1.5% as well.
- All cable terminations, excluding module-to-module and module-to-cable harness connections, shall be permanently labeled.
- All electrical connections and terminations shall be torqued according to manufacturer specifications and marked/sealed at appropriate torque point.

3.5.14 Grounding and Bonding

- Module ground wiring splices shall be made with irreversible crimp connectors.

- All exposed ground wiring must be routed above the lower surface of any structural framing.

3.5.15 Monitoring System, DAS, and Reporting

Proposer shall design, build, activate and ensure proper functioning of Data Acquisition Systems (DAS) that enable the County, City, or Agency to track the performance of the PV Systems as well as environmental conditions through an online web-enabled graphical user interface and information displays. Proposer shall provide equipment to connect the DAS via existing hardline, Wi-Fi network, or cellular data network at all locations. The means of data connection will be determined during design.

The DAS(s) shall provide access to at least the following data:

- Instantaneous AC system output (kW)
- PV System production (kWh) over pre-defined intervals that may be user configured
- In-plane irradiance
- Ambient and cell temperature
- Inverter status flags and general system status information
- System availability
- Site Load information. Available load data for the meter the system is connected to shall be collected by the solar monitoring solution as part of the DAS.

Environmental data (temperatures and irradiance) shall be collected via an individual weather station installed at the site

Data collected by the DAS shall be presented in an online web interface, accessible from any computer through the Internet with appropriate security (e.g., password controlled access). The user interface shall allow visualization of the data at least in the following increments: 15 minutes, hour, day, week, month, and year. The interface shall access data recorded in a server that may be stored on-site or remotely with unfettered access by the County, City, or Agency for the life of the Project. The online interface shall enable users to export all available data in Excel or ASCII comma-separated format for further analysis and data shall be downloadable in at least 15-minute intervals for daily, weekly, monthly and annual production.

The Monitoring system shall enable County, City, or Agency staff to diagnose potential problems and perform remediating action. The monitoring system shall provide alerts when the system is not functioning within acceptable operating parameters. These parameters shall be defined during the design phase of the Project and specified in the DAS design document. At a minimum, County, City, or Agency shall have the ability to compare irradiance to simultaneous power production measurements through linear regression analysis.

Additionally, Proposer shall make available, at no additional cost, the following reports for a term of 5 years after Final Completion of the project:

- Monthly Production report shall be available online to the County, City, or Agency personnel.
- System performance data shall be made available electronically to the County, City, or Agency in a format and at a frequency to be determined during the Design Review process.

- Additional reports shall be made available to the County, City, or Agency to assist the County, City, or Agency in reconciling system output with utility bills and the production guarantee, as determined in the Design Review process.

A Monitoring Manual shall be provided to the County, City, or Agency in printed or on-line form that describes how to use the monitoring system, including the export of data and the creation of custom reports.

3.6 WARRANTIES

Proposer shall provide a comprehensive ten (10) year warranty on all system components against defects in materials and workmanship under normal application, installation, and use and service conditions.

Additionally, the following minimum warranties are required:

- PV Modules: The PV modules are to be warranted against degradation of power output of greater than 10% of the original minimum rated power in the first ten (10) years and greater than 20% in the first twenty (25) years of operation.
- Inverters: Inverters shall carry a minimum 10-year warranty.
- Meters: At minimum, meters shall have a five (5) year warranty. For meters integrated in inverters, the meter warranty period must match the inverter.
- Mounting system: Minimum fifteen (15) year warranty, covering at least structural integrity and corrosion.
- Balance of system components: The remainder of system components shall carry manufacturer warranties conforming to industry standards.

All warranties must be documented and be fully transferable to the County, City, or Agency.

All work performed by Proposer must not render void, violate, or otherwise jeopardize any preexisting County, City, or Agency facility or building warranties or the warranties of system components.

4. Procurement/Construction

4.1 TREE REMOVAL

No trees shall be removed as part of the Project.

4.2 LINE LOCATION

Proposer will be responsible for locating, identifying and protecting existing underground utilities conduits, piping, substructures, etc. and ensuring that no damage is inflicted upon existing infrastructure. In addition to USA Dig and utility line-locating, a private line-locator must be used for any project requiring underground work.

4.3 QUALITY CONTROL

To ensure safety and quality of the installation, Proposer shall:

- Keep the Site clean and orderly throughout the duration of construction. All trash and rubbish shall be disposed of off-site by licensed waste disposal companies and in accordance with applicable Law.
- Fully comply with all applicable notification, safety and Work rules (including County, City, or Agency safety standards) when working on or near County, City, or Agency facilities.
- Provide all temporary road and warning signs, flagmen or equipment as required to safely execute the Work. Street sweeping services shall also be provided as required to keep any dirt, soil, mud, etc. off of roads. Comply with all state and local storm water pollution prevention (SWPP) ordinances.

4.4 REMOVAL AND REMEDIATION

Proposer shall remove all construction spoils, abandoned footings, utilities, construction equipment and other byproducts of construction. All disturbed areas including landscaping, asphalt, and concrete shall be remediated to be in equal or better condition than found. Parking lots shall be re-striped if affected by construction operations.

The site shall be left clean and free of debris or dirt that has accumulated as a result of construction operations.

5. Testing and Commissioning

Following completion of construction, Proposer shall provide the following services related to startup and performance testing of the PV systems:

- Acceptance Testing
- System Startup
- Proving Period

A detailed Testing Plan covering each of the phases above shall be submitted and approved by the County, City, or Agency prior to substantial completion of construction. A detailed description of each phase is provided below.

5.1 ACCEPTANCE TESTING

Proposer shall perform a complete acceptance test for each PV System. The acceptance test procedures include component tests as well as other standard tests, inspections, safety and quality checks. All testing and commissioning shall be conducted in accordance with the manufacturer's specifications.

The section of the Testing Plan that covers Acceptance Testing shall be equivalent or superior to the CEC (California Energy Commission) "Guide to Photovoltaic (PV) System Design and Installation", Section 4 and shall cover at least the following:

- Detailed list of all items to be inspected and tests to be conducted.
- Acceptance Criteria: For each test phase, specifically indicate what is considered an acceptable test result.

The Acceptance Testing section of the Testing Plan shall include (but not be limited to) the following tests:

- String-level voltage (open circuit) and amperage (under load) testing for all PV strings. Amperage testing shall be performed concurrently with irradiance testing.

- Inverter testing for all inverters. The inverters shall be commissioned on-site by a qualified technician and shall confirm that the inverter can be operated locally per specification and that automatic operations such as wake-up and sleep routines, power tracking and fault detection responses occur as specified. Performance testing shall be performed concurrently with irradiance testing.
- Testing of all sensors of the DAS.
- Testing of the Data Presentation interface of the DAS.

After Proposer conducts all Acceptance Testing based on the Testing Plan approved by the County, City, or Agency prior to substantial completion, Proposer shall submit a detailed Acceptance Test Report to the County, City, or Agency for review.

The Acceptance Test Report shall document the results of the tests conducted following the Testing Plan, and include additional information such as the date and time each test was performed. It shall also make reference to any problem and deficiencies found during testing. If there was troubleshooting done, the Report shall describe the troubleshooting methods and strategy. Proposer shall be responsible for providing the labor and equipment necessary to troubleshoot the System.

5.2 PROVING PERIOD (30 DAYS)

Upon completion of Acceptance Testing and System Startup, and approval by the County, City, or Agency, Proposer shall monitor the system during a thirty (30) day Proving Period and submit a report for County, City, or Agency review and approval prior to final acceptance by the County, City, or Agency. This includes monitoring system output and ensuring the correct functioning of system components over this time. The values for the following data shall be acquired every fifteen (15) minutes over thirty (30) days:

- AC system output (kW)
- PV system production (kWh)
- In-plane irradiance
- Ambient and cell temperature
- Inverter status flags and general system status information
- System availability

Proposer shall utilize calibrated test instruments and the DAS and monitoring system to collect the test data described above, which shall be made available to the County, City, or Agency for access throughout the Proving Period. Proposer shall determine through analysis of data from the Proving Period whether the PV system delivers the expected production as determined by the final approved design (i.e., Construction Documents). Actual production shall be compared against expected production using actual weather data and other system inputs (such as module cell temperature factor, module mismatch, inverter efficiency, and wiring losses) for calculating expected production. The production figures for all meters, whether existing or installed by or on behalf of the IOU or by or on behalf of the Respondent, shall be correlated during this test to verify their accuracy in measuring system production.

All data and reports required in Section 3.5.15 shall be fully functional and available to the County, City, or Agency at the commencement of the Proving Period. Data and reporting requirements are included in the testing scope of the Proving Period and deficiencies in these areas (including missing data, inaccurate reports, and other issues that make validation of system performance inconclusive) shall be grounds for denying approval of the Proving Period Report.

If the PV system does not perform to design specifications, Proposer shall perform diagnostic testing. Deficiencies shall be identified with proposed corrective actions submitted to the County, City, or Agency, and the Proving Period test repeated. Proposer shall be responsible for providing the labor and equipment necessary to troubleshoot the system. The Proving Period Report shall be submitted after the successful completion of this phase and submitted to the County, City, or Agency for review and approval. The report shall contain, but not be limited to, the following information; calculations shall be provided in Excel format with formulas visible to allow for peer review:

- System description
- Test period
- Test results
- Anomalies identified during test
- Corrective action performed
- Actual measured performance
- Calculations detailing expected performance under TMY conditions

5.3 CLOSE-OUT DOCUMENTATION REQUIREMENTS

Close-Out documents prepared by Proposer must include at minimum, but not limited to, the following items:

- Final As-Built Drawing Set with accurate string diagram, provided in (2) hard copy sets and an electronic copy in both DWG and PDF format (or as desired by County, City, or Agency).
- Megger test Results
- Module flash-test results with serial numbers
- Component warranties
- Signed inspections cards from AHJ and required Special Inspections
- Interconnection agreements and Permission To Operate
- Owner's Manual

5.4 TRAINING

The Proposer shall provide two (2) hours of on-site training for County, City, or Agency personnel in all aspects of operation, routine maintenance, and safety of the PV systems, DAS, and monitoring solution. At a minimum, training topics shall include the following:

- PV system safety, including shut-down procedures
- PV module maintenance and troubleshooting
- Inverter overview and maintenance procedures
- Calibration and adjustment procedures for the inverters and tracking systems (if any)
- DAS and monitoring solution, including standard and custom reporting

Proposer shall submit a proposed Training Plan during the design process for approval and provide all training materials and manuals to support on-site training in advance of scheduled training sessions (see schedule of submittals in Section 2.3, "Submittals"). The on-site portion of the training program shall be scheduled to take place at the jobsite at a time agreeable to both the County, City, or Agency and Proposer.

6. Operations and Maintenance

Proposer shall offer Operations and Maintenance services for ten (10) years with their Proposal, with an option to extend the Contract for up to an additional ten (10) years. The County, City, or Agency reserves the right to not execute the Operations and Maintenance services agreement. In offering such services, Proposer shall perform all necessary preventive and corrective maintenance, which includes routine maintenance adjustments, replacements, and electrical panel/transformer/ inverter cleaning (interior and exterior) with supporting documentation delivered to the County, City, or Agency after the Work has been performed. Maintenance by Proposer shall ensure that all warranties, particularly inverter warranties, are preserved. Proposer shall determine the frequency and timing of panel wash-downs based on system monitoring data, as described below. Environmental sensors such as pyranometers shall be tested and recalibrated at least once every three (3) years.

For any maintenance visits, Proposer shall give 3-day advance notification to County, City, or Agency, and no on-site visits shall be performed without approval of the County, City, or Agency, except in case of emergency.

Proposer shall perform the following maintenance services, at a minimum, as described in the following sections:

6.1 PREVENTIVE MAINTENANCE

Preventive Maintenance shall be performed at least annually and include:

- System testing (voltage/amperage) at inverter and string levels
- System visual inspection to include but not be limited to the list below. All discovered issues should be resolved as needed.
    - Inspect for stolen, broken or damaged PV modules, record damage and location. Report to the County, City, or Agency and wait for the County, City, or Agency to authorize a course of action.
    - Inspect PV wiring for loose connections and wire condition.
    - Inspect for wires in contact with the structure or hanging loose from racking.
    - Check mechanical attachment of the PV modules to the racking.
    - Check attachment of racking components to each other and the structure.
    - Verify proper system grounding is in place from panels to the inverter.
    - Check conduits and raceways for proper anchorage to structures.
    - Inspect all metallic parts for corrosion.
    - Check combiner boxes for proper fuse sizes and continuity.
    - Inspect all wiring connections for signs of poor contact at terminals (burning, discoloration).
    - Inspect disconnects for proper operation.
    - Survey entire jobsite for debris or obstructions.
    - Inspect fasteners for proper torque and corrosion.
    - Inspect inverter pad for cracking or settling.
    - Inspect electrical hardware for proper warning and rating labeling.
    - Inspect alignment of arrays and racking to identify settling foundations or loose attachments.
    - Inspect operation of tracking hinges, pivots, motors and actuators if present.
    - Check for proper operation and reporting of monitoring hardware.
    - Inspect sealed electrical components for condensation buildup.

    - Inspect wiring and hardware for signs of damage from vandalism or animal damage.
- Routine system maintenance to include correction of loose electrical connections, ground connections, replacement of defective modules found during testing, other minor maintenance repair work.
- Module cleaning, at a frequency to be determined by the ongoing monitoring of the system such that effect on production is no more than 5%, but not less often than twice a year.
- Routine DAS maintenance to include sensor calibration and data integrity check.

6.2 TROUBLESHOOTING, INSPECTION AND ADDITIONAL REPAIRS

- Dispatch of field service resources within two business days of notification (via automated or manual means) for repairs as necessary to maintain system performance.
- Any corrective action required to restore the system to fully operational status shall be completed within 24 hours of the service resources arriving on-site.
- Major system repairs, not to include mid-voltage switchgear or transformers.

6.3 CUSTOMER SERVICE SUPPORT

- Support telephone line made available to County, City, or Agency staff to answer questions or report issues.
- Support line shall be staffed during operational hours from 8 am – 6 pm California Standard Time. During times outside of this operational period, an urgent call shall be able to be routed to a supervisor for immediate action.

6.4 MAJOR COMPONENT MAINTENANCE AND REPAIR

- Inverter repair and component replacement and refurbishment as required in the event of inverter failure.
- Inverter inspection and regular servicing as required under inverter manufacturer's warranty specifications. Those include but are not limited to the following annually:
    - Check appearance/cleanliness of the cabinet, ventilation system and all exposed surfaces.
    - Inspect, clean/replace air filter elements
    - Check for corrosion on all terminals, cables and enclosure.
    - Check all fuses.
    - Perform a complete visual inspection of all internally mounted equipment including subassemblies, wiring harnesses, contactors, power supplies and all major components.
    - Check condition of all the AC and DC surge suppressors.
    - Torque terminals and all fasteners in electrical power connections.
    - Check the operation of all safety devices (E-stop, door switches).
    - Record all operating voltages and current readings via the front display panel.
    - Record all inspections completed.
    - Inform inverter manufacturer of all deficiencies identified.
    - Oversee inverter manufacturer performance of In-Warranty replacement of failed inverter components.
- Customer advocacy with vendors.

6.5 OTHER SYSTEM SERVICES

- O&M Manuals – Proposer shall provide three (3) copies of O&M Manuals. Updated editions of O&M Manuals shall be sent electronically to the County, City, or Agency as they become available.
- Management of long-term service and warranty agreements, ongoing.
- Proposer shall log all maintenance calls and document all maintenance activities. These activities shall be presented in a report, which is to be submitted to the County, City, or Agency upon request.

O&M services shall be priced separately from the design and construction of the PV system. Proposer shall submit a detailed description of their O&M services, detailing the activities and the intervals at which they will be performed, with their Proposal.

ATTACHMENT D
KEY CONTRACT TERMS AND CONDITIONS

Described below are selected key terms and conditions that the Participants ("Buyers") desire to be included in contracts with Proposers ("Sellers"), using substantially similar language. This is NOT comprehensive, but rather provides certain specific areas that should be addressed in a Proposer-provided PPA template. Proposers must provide comments (if any) to these key terms as well as a sample Power Purchase Agreement for evaluation.

Power Purchase Agreements

A. Contract Term

A 20-year term, with 5-year options to extend at the Buyer's request, must be offered. Proposer may additionally offer alternatives with shorter or longer terms as they so choose.

B. Performance Guarantee

I. Buyer agrees to purchase all of the Delivered Energy, except as noted below.
II. In the event that the Delivered Energy exceeds 110% of Expected Annual Contract Quantity at a particular site for any given year, Buyer has the first option, but is not required, to purchase Delivered Energy above 110% of Expected Annual Contract Quantity for such site. If Buyer does not purchase excess Delivered Energy, Seller shall have the right to resell such excess energy to a third party, pursuant to all applicable laws, in which case proceeds from the sale of such electricity will solely accrue to the Seller.
III. At the end of each three (3) Contract Year Period, if the Delivered Energy is less than 95 percent (95%) of the total Expected Annual Contract Quantity for such three (3) Contract Years, Seller shall pay to Buyer the product of the positive difference between the Replacement Price and the Base Contract Price for the kwh shortfall, if any, between the Delivered Energy and 95% of the Expected Annual Contract Quantity for the three (3) year period.
IV. If Seller is prevented from generating or delivering the Delivered Energy due to a Force Majeure Event, Seller's obligation under this Section shall be reduced to the extent of such impact.
V. The Parties recognize and agree that (A) with the exception of an event of a default, payment of amounts by Seller to Buyer pursuant to this Section is an appropriate remedy, and (B) any such payment does not constitute a forfeiture or penalty of any kind, but rather constitutes anticipated costs to Buyer under the terms of this Agreement.

C. Environmental Attributes

Throughout the Term, Seller shall transfer to Buyer, and Buyer shall receive from the Seller, all rights, titles and interest in and to the Environmental Attributes, if any, whether now existing or subsequently generated or acquired (other than by direct purchase from a third party) by Seller, or that hereafter come into existence, during the Term, as a component of the Output purchased by Buyer from Seller hereunder. Seller agrees to transfer and make such Environmental Attributes available to Buyer immediately to the fullest extent allowed by applicable law upon Seller's production or acquisition of the Environmental Attributes. Seller agrees that the Base Contract Price, as applicable is the full compensation for all Environmental Attributes.

D. Indemnification and Assumption of Risk

To the extent allowed by law, each Party (each, an "Indemnifying Party") shall indemnify, defend and hold harmless the other Party, its employees, directors, officers, managers, members, shareholders, subsidiaries and agents (each, an "Indemnified Party") from, against and in respect of all liabilities, losses, lawsuits, penalties, claims, settlement payments, costs and expenses, interest, awards, judgments, damages, fines or demands (including the costs, expenses and reasonable attorneys' fees on account thereof) to the extent arising out of or related to the Indemnifying Party's (i) material breach of any covenant, obligation, representation, or warranty set forth in this Agreement and/or (ii) negligence or willful misconduct. An Indemnified Party shall notify the Indemnifying Party promptly of any written claims or demands against the Indemnified Party from a third party for which the Indemnifying Party is responsible hereunder. The foregoing indemnity shall be in addition to and not in lieu of any other indemnity obligations provided by law and shall not be limited by the insurance provisions contained herein or insurance proceeds. The indemnity provided in this Section also shall apply to the successors and permitted assigns of the Indemnified Party. This Section shall survive the expiration or termination of this Agreement.

E. Assignment by Seller

I. Collateral Assignment. Buyer acknowledges that Seller may finance the acquisition and installation of the System through a loan, lease or partnership from or with one or more 3rd party capital lenders, lessors, limited liability companies or partnerships ("each a Capital Partner"). Seller may secure such financing with collateral security assignment of this Agreement (including a first security interest in the System). In order to facilitate any such transaction, Buyer:
    a. consents to such a Collateral Assignment by Seller to the Capital Partner, and
    b. agrees to take any actions and provide any documentation reasonably requested by Seller in connection with such a transaction.

II. Full Assignment. Notwithstanding Articles above, Seller shall not sell, transfer or assign (collectively, a "Full Assignment") the Seller's rights and obligations under this Agreement, or any interest in the Agreement, without the prior written consent of Buyer. Upon written request by Seller of Buyer to approve any

particular Full Assignment, Buyer must approve or deny such request within thirty (30) days (unless the parties mutually agree in writing to a longer period), or Seller may make the Full Assignment without Buyer's prior written consent. Upon the completion of a Full Assignment by Seller that follows the requirements of this Agreement, the term "Seller" shall apply to the full assignee. Buyer's consent to any other Full Assignment of the Seller's rights and obligations of the Agreement shall not be unreasonably withheld if Buyer has been provided with reasonable proof to the Buyer's reasonable satisfaction that the proposed assignee (and subcontractor(s) with whom it has an active contract):

a. has experience in operating and maintaining fuel cell or solar PV systems, as applicable, greater than or equal to that of Seller; and
b. has the financial capability and credit rating equal to or greater than that of Seller; and
c. has the ability to maintain the System and provide the Services provided pursuant to this Agreement in the manner required by this Agreement and provides all applicable warranties that it shall do so; and
d. provides proof that it complies with the Removal Fund requirements of this Agreement.

III. Seller will not sell, lease, or otherwise make a Full Assignment of the System to any Person unless it also assigns all of its rights and obligations to such Person and such Assignment is permitted by this Article. Assignments or transfers not in compliance with this section will be void. In the case where Seller is not required to get prior written consent of Buyer to make a Collateral Assignment, Seller shall provide prior written notice of any such Collateral Assignment to Buyer. Any Collateral Assignment by Seller shall not release either Party of its obligations hereunder.

IV. Rights of Assignees Upon Event of Default.

a. In the event of a Buyer Default, a Collateral Assignee, shall be entitled to exercise, in the place and stead of Seller, any of Seller's rights under this Agreement that have been assigned to the Collateral Assignee.
b. In the case where a Seller Default has occurred and Seller had not assigned its obligations under this Agreement to a Capital Partner, any Capital Partner shall have the right but not the obligation to assume the Seller's obligations under this Agreement within 45 days of the Seller's default. For avoidance of doubt, in the event that a Capital Partner exercises its right contemplated in this section, such Capital Partner shall assume all obligations under this Agreement as well as assuming all of Seller's rights and interests under the Agreement, and thereafter shall become the Successor-in-Interest to Seller under this Agreement. In the event that a Capital Partner exercises its right to assume all of Seller's rights, interests, and obligations under the Agreement, it shall so assume in writing, and Seller shall have no further obligation to Buyer unless accrued up to that point.

i. A Successor-in-Interest shall cure any ongoing Seller Defaults promptly after becoming the Successor-in-Interest and no later than 90 days. If the Successor-in-Interest does not cure the Seller Default, it will also be considered to be in default and Buyer shall have all rights afforded to Buyer against such Successor-in-Interest under this Agreement as in the case of a Seller Default.

ii. Buyer shall be relieved of its obligations under this Agreement during the Default Period and may exercise its termination rights pursuant to this Agreement (including without limitation, invoking the use of the Removal Fund to have any facilities/equipment removed). If Buyer chooses not to exercise any available termination rights and when the Successor-in-Interest cures any and all Seller Defaults, the respective Buyer and Seller rights and obligations shall resume for the remainder of the Term. No partial or complete waiver of Buyer's rights shall be implied from Buyer's actions pursuant to this paragraph.

iii. Payments and Notices. If a Collateral Assignee elects to become the Successor-in-Interest, it will be solely responsible for notifying the Seller and any other Collateral Assignees of this intention. The Buyer shall not be responsible for passing any notices, information and/or communications between the Seller and Collateral Assignees. If a Collateral Assignee does become a Successor-in-Interest, Buyer shall make all payments due under this Agreement to an account specified by such Collateral Assignee. For avoidance of doubt, upon the Collateral Assignee becoming the Successor-in-Interest the previous Seller shall not retain any of its rights or obligations under this Agreement and payments made by Buyer to the Successor-in-Interest shall satisfy Buyer's payment obligations under this Agreement.

V. Seller shall be solely responsible to provide contact information, including mailing addresses, email addresses and phone numbers for all Collateral and Full Assignees to Buyer. Buyer shall notify all Collateral Assignees for which it has contact information within 15 days of a Seller default. Seller shall be solely responsible for any instance where a Collateral Assignee does not receive notice due to the Seller not providing contact information to Buyer.

VI. Collateral Assignee Changes. Buyer acknowledges and agrees that Seller, subject to the terms and conditions of this Agreement and terms relating to Assignment in particular, may change one or more Collateral Assignees. In the case that a Seller changes a Collateral Assignee, Seller shall provide Buyer with any relevant, new contact information and payment directions as instructed by Seller. The terms and conditions of this Agreement, and particularly of assignment, shall apply to any change in Capital Partner by Seller.

VII. Notwithstanding any language to the contrary, when any assignee chooses to exercise any rights against Buyer, it shall indemnify (and shall agree to do so in writing upon request by Buyer) Buyer for any claims arising from exercise of such rights. By way of example and not limitation, such indemnification obligations shall extend to claims by other Capital Partners or Collateral Assignees asserted against Buyer. Any assignee's ability to exercise any rights against Buyer shall be contingent on the assignee's assumption of such indemnification obligations.

F. Cooperation with Review

Seller shall cooperate with Buyer's periodic review of Seller's performance. Such review may be conducted on a semi-annual or more frequent basis at the option of the Buyer. Seller shall make itself available onsite to review the progress of the project and Agreement, as requested by the Buyer, upon reasonable advanced notice. Seller agrees to extend to the Buyer or his/her designees and/or designated auditor of the Buyer, the right to monitor or otherwise evaluate all work performed and all records, including service records and procedures to assure that the project is achieving its purpose, that all applicable Buyer, State, and Federal regulations are met, and that adequate internal fiscal controls are maintained. The Seller shall be responsible for receiving, replying to, and complying with any audit exceptions set forth in Buyer audits. The Seller shall pay to Buyer the full amount of any audit determined to be due as a result of Buyer audit exceptions. This provision is in addition to other inspection and access rights specified in this Agreement.

G. Definitions

"Adjusted Delivered Energy" means the Delivered Energy produced from each Generating Facility as measured and reported via by revenue grade meters.

"Base Contract Price" means the price in $U.S. per kWh to be paid by Buyer to Seller for the purchase of the Output, as specified in the Contract Price Exhibit.

"Expected Annual Contract Quantity" means the amount of Delivered Energy and Environmental Attributes that Seller expects to deliver to Buyer hereunder in a given Contract Year other than the first and last Contract Years (with may be partial years), as set forth in the Expected Contract Quantity Exhibit.

"Replacement Price" means the current price at which Buyer, acting in a commercially reasonable manner, purchased or purchases a replacement for any Adjusted Delivered Energy required to be, but not delivered by Seller hereunder, plus costs reasonably incurred by Buyer in purchasing such substitute electricity, and additional transmission and distribution charges, if any, reasonably incurred by Buyer, to the Delivery Point.

H. Force Majeure Events

a) Excuse. Subject to this Article, and except as expressly set forth herein, neither Party shall be considered in default under this Agreement for any delay or failure in its performance under this Agreement (including any obligation to deliver or accept Output) if such delay or failure is due to a Force Majeure Event, but only to the extent that:

(i) Such Force Majeure Event is not attributable to fault or negligence or action or inaction on the part of that Party;
(ii) Such Force Majeure Event is caused by factors beyond that Party's reasonable control; and
(iii) Despite taking all reasonable technical and commercial precautions and measures to prevent, avoid, mitigate or overcome such event and the consequences thereof, the Party affected has been unable to prevent, avoid, mitigate or overcome such event or consequences.

b) "Force Majeure Event" may include, subject to this Article:

(i) acts of Nature such as storms, floods, lightning and earthquakes;
(ii) sabotage or destruction by a third party of facilities and equipment relating to the performance by the affected Party of its obligations under this Agreement;
(iii) Utility Transmission System outage or failure not caused by Seller or Seller activities;
(iv) war, riot, acts of a public enemy or other civil disturbance;
(v) strike, walkout, lockout or other significant labor dispute;
(vi) theft, vandalism, accidents, or construction related power interruptions and mechanical moves not caused by Seller; and
(vii) curtailment by the ISO, or its successor, but only to the extent that the ISO declares a "Force Majeure" under the ISO Tariff.

c) Exclusion. "Force Majeure Event" does not include the following:

(i) economic hardship of either Party;
(ii) an Outage, except if caused directly by an event or circumstance that meets the requirements set forth in this Article;
(iii) failure or delay in the granting of Permits;
(iv) failures or delays by the Local Electric Utility or the ISO in entering into, or performing under, all agreements with Seller contemplated by this Agreement;
(v) curtailment or interruption of transmission services, other than by the ISO where the ISO declares a "Force Majeure" under the ISO Tariff; or
(vi) insufficiency, unavailability, failure, or diminishment of solar resource, except as a result of an event that would otherwise qualify as a Force Majeure Event

(d) Notwithstanding anything to the contrary, due to the constitutional limitations on Buyer, a Force Majeure event shall include a "budget non-appropriation event" in which the Buyer's appropriation for any year covered in this Agreement does not appropriate funds for the procurement of any utility services for Buyer. During the continuation of a budget non-appropriation event as defined above, if the Buyer does not otherwise have other funds available to make payments otherwise due on this Agreement, the Buyer shall not be obligated to pay for (and the Seller shall not be required to deliver) any services provided under this Agreement until the budget non-appropriation event has terminated. Buyer agrees that it shall use its best efforts to seek appropriation for utility services during the term of this Agreement. If a budget non-appropriation event continues for more than 180 days, Seller (but not Buyer) may terminate this Agreement, subject to the available Seller's Remedies as described in the applicable Articles.

I. Insurance

Insurance Requirements

Commented [SH1]: Relic insurance language from past procurements, City should update as necessary.

Indemnity

In conjunction with work performed at a City site, the Contractor shall exonerate, indemnify, defend, and hold harmless CITY (which shall include, without limitation, its officers, agents, employees and volunteers) from and against:

1. Any and all claims, demands, losses, damages, defense costs, other legal costs, or liability of any kind or nature which CITY may sustain or incur or which may be imposed upon it at any time for injury to or death of persons, or damage to property as a result of, arising out of, or in any manner connected with the CONTRACTOR'S performance under the terms of this Contract, excepting any liability arising out of the sole negligence of the CITY. Such indemnification includes any damage to the person(s), or property(ies) of CONTRACTOR and third persons. In addition, the Contractor shall hold the City of South Lake Tahoe, its officers, agents, and employees, harmless from liability of any nature or kind, including costs and expenses, for infringement or use of any copyrighted or un-copyrighted composition, secret process, patented or unpatented invention, article, or appliance furnished or used in connection with the contract or purchase order.

2. Any and all Federal, State and Local taxes, charges, fees, or contributions required to be paid with respect to CONTRACTOR and CONTRACTOR'S officers, employees and agents engaged in the performance of this Contract (including, without limitation, unemployment insurance, Social Security and payroll tax withholding).

Insurance

CONTRACTOR, at its sole cost and expense, for the full term of this Contract (and extensions thereof), shall obtain and maintain at minimum all of the following insurance coverage. Such insurance coverage shall be primary coverage as respect to the CITY and any insurance or self-insurance maintained by the CITY shall be excess of CONTRACTOR'S insurance coverage and shall not contribute to it.

1. Types of Insurance and Minimum Limits
   a) Worker's Compensation and Employer's Liability Insurance in conformance with the laws of the State of California.

   b) CONTRACTOR'S vehicles used in the performance of this Contract, including owned, non-owned (e.g. owned by CONTRACTOR'S employees), leased or hired vehicles, shall each be covered with Automobile Liability Insurance in the minimum amount of $500,000.00 combined single limit per accident for bodily injury and property damage.

   c) CONTRACTOR shall obtain and maintain Comprehensive General Liability Insurance coverage in the minimum amount of $1,000,000.00 combined single limit, including bodily injury, personal injury, and property damage. Such insurance coverage shall include, without limitation:
      (i) Contractual liability coverage adequate to meet the CONTRACTOR'S indemnification obligations under this Request;
      (ii) Full Personal Injury coverage;
      (iii) Broad form Property Damage coverage, and
      (iv) A cross liability clause in favor of CITY.
2. Other Insurance Provisions
   a) As to all insurance coverage required herein any deductible or self-insured retention exceeding $5,000.00 shall be disclosed to and be subject to written approval by CITY.
   b) If any insurance coverage required hereunder is provided on a "claims made" rather than "occurrence" form, CONTRACTOR shall maintain such insurance coverage for five years after expiration of the term (and any extensions) of this Contract.
   c) All required Automobile Liability Insurance, Comprehensive or Commercial General Liability Insurance or Professional Liability Insurance shall contain the following endorsement as a part of each policy: "The City of South Lake

Tahoe is hereby added as an additional insured as respects the operations of the named insured."

d) All the insurance required herein shall contain the following clause: "It is agreed that these policies shall not be canceled, nor the coverage reduced until thirty (30) days after the CITY shall have received written notice of such cancellation or reduction. The notice shall be deemed effective the date delivered to the CITY as evidenced by properly validated return receipt. Such notice shall be sent to: [ADDRESS]

e) Prospective CONTRACTOR agrees to provide CITY at or before the effective date of any award resulting from this Request for Proposal with a certificate of insurance of the coverage required.

f) If any insurance policy of Contractor required by these Contract Documents includes language conditioning the insurer's legal obligation to defend or indemnify the City of South Lake Tahoe on the performance of any act(s) by the named insured, then said insurance policy, by endorsement, shall also name the City of South Lake Tahoe as a named insured. Notwithstanding the foregoing, both the Contractor and its insurers agree that by naming City of South Lake Tahoe as a named insured, the City of South Lake Tahoe may at its sole discretion, but is not obligated to, perform any act required by the named insured under said insurance policies.

g) Prospective CONTRACTOR shall do all things required to be performed by it pursuant to its insurance policies including but not limited to paying within five (5) work days, all deductibles and self-insured retentions (SIR) required to be paid under any insurance policy that may provide defense or indemnity coverage to the City or any additional insured.

h) All required insurance policies shall be endorsed to contain the following clause: "This Insurance shall not be cancelled until after thirty (30) days prior written notice has been given to:

[ADDRESS]

CONTRACTOR agrees to provide its insurance broker(s) with a full copy of these insurance requirements and provide CITY on or before the effective date of this contract Certificates of Insurance for all required coverage.

All respondents will be required to furnish, at time of submittal of Request for Proposals, proof of the insurances stated herein, which will be incorporated in the final contract with the Contractor selected.

If you do not currently carry the type/limit of insurance stated herein, please submit your Proposal with any differences clearly noted. Indicate if you would be able to obtain the proposed insurance and, if so, indicate the dollar amount, if any, that your Proposal would be increased due to the cost of this insurance. Finally please indicate any other problems you or your insurance carriers may have with the proposed insurance requirements and why.

It is recommended that you provide a copy of the insurance requirements to your insurance broker(s) for review.

Direct Purchase Contract Terms

Please refer to individual Participating Agency General Conditions requirements for direct purchasing contract terms.

Attachment E
Respondent Fact Sheet

Name of Contractor: _____

Contractor Tax ID#: |__|__| _ |__|__|__|__|__|__|__|

Contractor's License #:_____Type:_____
(as applicable)

Contractor Does Business As:____Individual____Partnership
____Corporation____Government____Fiduciary ____Other

Contractor is a:____Resident____Non-Resident of California

1) Is your firm authorized to do business in the State of California? Y N
2) Is your firm a State of California registered small business? Y N

3) Is this a disabled owned business? Y N

4) Is this a woman owned business? Y N

5) Is this a minority owned business? Y N

6) Has your firm been certified as a minority firm by any public agency? Y N
If yes, name of agency: _____

Name of certifying officer:_____Phone # _____

7) Disadvantaged Business Enterprise (DBE) status as it applies to your firm:
Composition of Ownership (see definition on the following page)

Please indicate percentage of ownership:___% Disabled___% Women

___% Black___% Hispanic___% Asian American___% Native American

8) This firm has been in continuous business under the present name for___years.

9) Annual sales volume:_____10) Net worth of business: _____

NOTE: Please reference Standard Definitions on the following page.

STANDARD DEFINITIONS FOR MINORITY/WOMEN/DISABLED BUSINESS ENTERPRISE FOR THE PURPOSES OF SANTA CRUZ COUNTY CONTRACT COMPLIANCE PROCEDURES SHALL BE AS FOLLOWS:

1. A **Minority Business Enterprise** (MBE) is a small business owned and controlled by one or more minorities or women. Owned and controlled means that:

   a. at least 51 percent of the small business concern is owned and controlled by one or more Minorities or women or, in the case of a publicly owned business, at least 51 percent of the stock of which is owned by one or more minorities or women; and

   b. whose management and daily business operations are controlled by one or more such individuals.

2. A **Women Business Enterprise** (WBE) is a small business, owned and controlled by one or more women. Owned and controlled means that:

   a. at least 51 percent of the small business concern is owned by one or more women; and
   b. whose management and daily business operations are controlled by one or more women who own it.

3. A **Disabled Owned Business Enterprise** (DOBE) is a small business owned and controlled by one or more disabled persons. Owned and controlled means that:

   a. at least 51 percent of the small business concern is owned by one or more disabled persons; and

   b. whose management and daily business operations are controlled by one or more disabled persons who own it.

NOTE: Certain projects conducted under state and federal oversight may have additional definitions and requirements.

Attachment E
Respondent Fact Sheet

Name of Contractor: _____

Contractor Tax ID#: |__|__| _ |__|__|__|__|__|__|__|

Contractor's License #: _____ Type: _____
(as applicable)

Contractor Does Business As: ___ Individual ___ Partnership
___ Corporation ___ Government ___ Fiduciary ___ Other

Contractor is a: ___ Resident ___ Non-Resident of California

1) Is your firm authorized to do business in the State of California? Y N
2) Is your firm a State of California registered small business? Y N

3) Is this a disabled owned business? Y N

4) Is this a woman owned business? Y N

5) Is this a minority owned business? Y N

6) Has your firm been certified as a minority firm by any public agency? Y N
If yes, name of agency: _____

Name of certifying officer: _____ Phone # _____

7) Disadvantaged Business Enterprise (DBE) status as it applies to your firm:
Composition of Ownership (see definition on the following page)

Please indicate percentage of ownership: ___% Disabled ___% Women

___% Black ___% Hispanic ___% Asian American ___% Native American

8) This firm has been in continuous business under the present name for ___years.

9) Annual sales volume: _____ 10) Net worth of business: _____

NOTE: Please reference Standard Definitions on the following page.

STANDARD DEFINITIONS FOR MINORITY/WOMEN/DISABLED BUSINESS ENTERPRISE FOR THE PURPOSES OF SANTA CRUZ COUNTY CONTRACT COMPLIANCE PROCEDURES SHALL BE AS FOLLOWS:

1. A **Minority Business Enterprise** (MBE) is a small business owned and controlled by one or more minorities or women. Owned and controlled means that:

a. at least 51 percent of the small business concern is owned and controlled by one or more Minorities or women or, in the case of a publicly owned business, at least 51 percent of the stock of which is owned by one or more minorities or women; and

b. whose management and daily business operations are controlled by one or more such individuals.

2. A **Women Business Enterprise** (WBE) is a small business, owned and controlled by one or more women. Owned and controlled means that:

a. at least 51 percent of the small business concern is owned by one or more women; and
b. whose management and daily business operations are controlled by one or more women who own it.

3. A **Disabled Owned Business Enterprise** (DOBE) is a small business owned and controlled by one or more disabled persons. Owned and controlled means that:

a. at least 51 percent of the small business concern is owned by one or more disabled persons; and

b. whose management and daily business operations are controlled by one or more disabled persons who own it.

NOTE: Certain projects conducted under state and federal oversight may have additional definitions and requirements.

Attachment F
Customer References

List and submit with Proposal, five (5) customer references for whom you have furnished similar services in size and nature, two (2) of which in El Dorado or Nevada County Area if applicable.
County/Public Agencies are preferred.

1. AGENCY/COMPANY NAME: _____

   ADDRESS: _____

   _____

   CONTACT PERSON: _____

   TELEPHONE NUMBER: _____

2. AGENCY/COMPANY NAME: _____

   ADDRESS: _____

   _____

   CONTACT PERSON: _____

   TELEPHONE NUMBER: _____

3. AGENCY/COMPANY NAME: _____

   ADDRESS: _____

   _____

   CONTACT PERSON: _____

   TELEPHONE NUMBER: _____

4. AGENCY/COMPANY NAME: _____

   ADDRESS: _____

   _____

   CONTACT PERSON: _____

   TELEPHONE NUMBER: _____

5. AGENCY/COMPANY NAME: _____

ADDRESS: _____

_____

CONTACT PERSON: _____

TELEPHONE NUMBER: _____

BUNDLE: El Dorado County
PROPOSER: Insert name

PRICE PROPOSAL FORM

Instructions

All yellow-highlighted cells must be filled by the Proposer. Blue-highlighted cells contain information entered by SEED Fund team and white cells contain formulas. Neither blue nor white cells may be changed by Proposers.
In the Proposal Summary Data section, Proposers must identify PV installation type (i.e. roof-mount, carport, etc.), module information, and inverter information.
In the PPA Price section, Proposers shall enter PPA pricing per site under "Year 1". If applicable, Proposers may enter price escalation rates in the bottom row of the table. If no escalation is provided, proposed escalation shall be assumed to be 0%.
As stated in the body of the RFP and in Attachment E, PPA pricing must include a payment of 1.9% of purchase price to the Participant for reimbursement to the SEED Fund.
Proposers may, but are not required to, submit multiple versions of this sheet to offer various PPA pricing options in regards to price, escalation, and length of term. At a minimum, a 20-year PPA with no initial down payment must be offered.
As an alternative to a standard PPA, on a separate version of this sheet, Proposers may enter Initial Down Payments, along with PPA pricing per site and price escalation rates, as a Pre-paid PPA option.
Below the PPA price table, Proposers have the option of entering PPA pricing discounts that would apply if the given solar capacity is contracted by the given date. Capacity is for all bundles and sites contracted by Proposer.
In Direct Purchase Price section, Proposers must enter $/W-DC under "System Price" for each site. Proposers also must enter cost proposal for 20 years of Operations & Maintenance at each site.
Operations & Maintenance pricing shall be evaluated together with, and separately from, direct purchase pricing, and determination to proceed will be decided by each Participant individually.
In Production Data section, Proposers must enter Year 1 production estimates, as determined by modeling software, with sample submitted in Section 7 of the proposal.
Prices quoted below are for full turn-key system installation, and shall include all taxes and all other charges, including travel expenses, and is the price the applicable Participant will pay for the term of any contract that is a result of this proposal.

Proposal Summary Data

Site #	Participants	Sites	PV Installation Type	Estimated System Size (kW DC)	Estimated Year 1 Production (kWh)	Estimated Yield (kWh/kW DC)	Historical Site Usage (kWh)	Estimated Load Offset (%)	Modules			Inverters			Inverters			Inverters			Inverters		
									Make and Model	Nameplate (Watts-DC)	Quantity	Make and Model	Nameplate (kW-AC)	Quantity	Make and Model	Nameplate (kW-AC)	Quantity	Make and Model	Nameplate (kW-AC)	Quantity	Make and Model	Nameplate (kW-AC)	Quantity
1				60	85,000	1,417	2,141,645	4%		300	200												
2				75	110,000	1,467	3,372,281	3%		300	250												
3				105	160,000	1,524	479,619	33%		300	350												
4				120	185,000	1,542	898,659	21%		300	400												
5				135	210,000	1,556	161,520	130%		300	450												
7				150	235,000	1,567	105,705	222%		300	500												
8				165	260,000	1,576	114,080	228%		300	550												
9				180	285,000	1,583	1,000,000	29%		300	600												
10				195	310,000	1,590	273,981	113%		300	650												

PPA PRICE per kWh - Participant keeps all RECs and Environmental Attributes for term of agreement

Site #		Sites	Initial Down Payment	Year 1	Year 2	Year 3	Year 4	Year 5	Year 6	Year 7	Year 8	Year 9	Year 10	Year 11	Year 12	Year 13	Year 14	Year 15	Year 16	Year 17	Year 18	Year 19	Year 20	Buyout	LCOE ($/kWh)
1	0	0	$0.00	$0.1600	$0.1632	$0.1665	$0.1698	$0.1732	$0.1767	$0.1802	$0.1838	$0.1875	$0.1912	$0.1950	$0.1989	$0.2029	$0.2070	$0.2111	$0.2153	$0.2196	$0.2240	$0.2285	$0.2331	FMV	$ 0.1937
2	0	0	$0.00	$0.1595	$0.1627	$0.1659	$0.1693	$0.1726	$0.1761	$0.1796	$0.1832	$0.1869	$0.1906	$0.1944	$0.1983	$0.2023	$0.2063	$0.2105	$0.2147	$0.2190	$0.2233	$0.2278	$0.2324	FMV	$ 0.1931
3	0	0	$0.00	$0.1585	$0.16	$0.1649	$0.1682	$0.1716	$0.1750	$0.1785	$0.1821	$0.1857	$0.1894	$0.1932	$0.1971	$0.2010	$0.2050	$0.2091	$0.2133	$0.2176	$0.2219	$0.2264	$0.2309	FMV	$ 0.1919
4	0	0	$0.00	$0.1580	$0.1612	$0.1644	$0.1677	$0.1710	$0.1744	$0.1779	$0.1815	$0.1851	$0.1888	$0.1926	$0.1965	$0.2004	$0.2044	$0.2085	$0.2126	$0.2169	$0.2212	$0.2257	$0.2302	FMV	$ 0.1913
5	0	0	$0.00	$0.1575	$0.1607	$0.1639	$0.1671	$0.1705	$0.1739	$0.1774	$0.1809	$0.1845	$0.1882	$0.1920	$0.1958	$0.1997	$0.2037	$0.2078	$0.2120	$0.2162	$0.2205	$0.2249	$0.2294	FMV	$ 0.1907
7	0	0	$0.00	$0.1570	$0.1601	$0.1633	$0.1666	$0.1699	$0.1733	$0.1768	$0.1803	$0.1840	$0.1876	$0.1914	$0.1952	$0.1991	$0.2031	$0.2072	$0.2113	$0.2155	$0.2198	$0.2242	$0.2287	FMV	$ 0.1901
8	0	0	$0.00	$0.1565	$0.1596	$0.1628	$0.1661	$0.1694	$0.1728	$0.1762	$0.1798	$0.1834	$0.1870	$0.1908	$0.1946	$0.1985	$0.2024	$0.2065	$0.2106	$0.2148	$0.2191	$0.2235	$0.2280	FMV	$ 0.1895
9	0	0	$0.00	$0.1560	$0.1591	$0.1623	$0.1655	$0.1689	$0.1722	$0.1757	$0.1792	$0.1828	$0.1864	$0.1902	$0.1940	$0.1978	$0.2018	$0.2058	$0.2100	$0.2142	$0.2184	$0.2228	$0.2273	FMV	$ 0.1889
10	0	0	$0.00	$0.1555	$0.1586	$0.1618	$0.1650	$0.1683	$0.1717	$0.1751	$0.1786	$0.1822	$0.1858	$0.1896	$0.1933	$0.1972	$0.2012	$0.2052	$0.2093	$0.2135	$0.2177	$0.2221	$0.2265	FMV	$ 0.1883
		Annual Escalation Rate:		2.00%	2.00%	2.00%	2.00%	2.00%	2.00%	2.00%	2.00%	2.00%	2.00%	2.00%	2.00%	2.00%	2.00%	2.00%	2.00%	2.00%	2.00%	2.00%		Bundle:	$ 0.1902
																								Weighted Discounted LCOE:	

Weighted Average PPA Price $0.1571

Direct Purchase Price - Participant keeps all RECs and Environmental Attributes for term of agreement

Site #		Sites	System Price ($/W-DC)	Operations & Maintenance Cost Proposal Year 1	Year 2	Year 3	Year 4	Year 5	Year 6	Year 7	Year 8	Year 9	Year 10	Year 11	Year 12	Year 13	Year 14	Year 15	Year 16	Year 17	Year 18	Year 19	Year 20	Total Purchase Price	LCOE ($/kWh)
1	0	0	$3.40	$ 1,800.00	$ 1,800.00	$ 1,800.00	$ 1,800.00	$ 1,800.00	$ 1,800.00	$ 1,800.00	$ 1,800.00	$ 1,800.00	$ 1,800.00	$ 1,800.00	$ 1,800.00	$ 1,800.00	$ 1,800.00	$ 1,800.00	$ 1,800.00	$ 1,800.00	$ 1,800.00	$ 1,800.00	$ 1,800.00	$204,000.00	$ 0.1480
2	0	0	$3.35	$ 1,900.00	$ 1,900.00	$ 1,900.00	$ 1,900.00	$ 1,900.00	$ 1,900.00	$ 1,900.00	$ 1,900.00	$ 1,900.00	$ 1,900.00	$ 1,900.00	$ 1,900.00	$ 1,900.00	$ 1,900.00	$ 1,900.00	$ 1,900.00	$ 1,900.00	$ 1,900.00	$ 1,900.00	$ 1,900.00	$251,250.00	$ 0.1378
3	0	0	$3.25	$ 2,100.00	$ 2,100.00	$ 2,100.00	$ 2,100.00	$ 2,100.00	$ 2,100.00	$ 2,100.00	$ 2,100.00	$ 2,100.00	$ 2,100.00	$ 2,100.00	$ 2,100.00	$ 2,100.00	$ 2,100.00	$ 2,100.00	$ 2,100.00	$ 2,100.00	$ 2,100.00	$ 2,100.00	$ 2,100.00	$341,250.00	$ 0.1256
4	0	0	$3.20	$ 2,200.00	$ 2,200.00	$ 2,200.00	$ 2,200.00	$ 2,200.00	$ 2,200.00	$ 2,200.00	$ 2,200.00	$ 2,200.00	$ 2,200.00	$ 2,200.00	$ 2,200.00	$ 2,200.00	$ 2,200.00	$ 2,200.00	$ 2,200.00	$ 2,200.00	$ 2,200.00	$ 2,200.00	$ 2,200.00	$384,000.00	$ 0.1213
5	0	0	$3.15	$ 2,300.00	$ 2,300.00	$ 2,300.00	$ 2,300.00	$ 2,300.00	$ 2,300.00	$ 2,300.00	$ 2,300.00	$ 2,300.00	$ 2,300.00	$ 2,300.00	$ 2,300.00	$ 2,300.00	$ 2,300.00	$ 2,300.00	$ 2,300.00	$ 2,300.00	$ 2,300.00	$ 2,300.00	$ 2,300.00	$425,250.00	$ 0.1176
7	0	0	$3.10	$ 2,400.00	$ 2,400.00	$ 2,400.00	$ 2,400.00	$ 2,400.00	$ 2,400.00	$ 2,400.00	$ 2,400.00	$ 2,400.00	$ 2,400.00	$ 2,400.00	$ 2,400.00	$ 2,400.00	$ 2,400.00	$ 2,400.00	$ 2,400.00	$ 2,400.00	$ 2,400.00	$ 2,400.00	$ 2,400.00	$465,000.00	$ 0.1144
8	0	0	$3.05	$ 2,500.00	$ 2,500.00	$ 2,500.00	$ 2,500.00	$ 2,500.00	$ 2,500.00	$ 2,500.00	$ 2,500.00	$ 2,500.00	$ 2,500.00	$ 2,500.00	$ 2,500.00	$ 2,500.00	$ 2,500.00	$ 2,500.00	$ 2,500.00	$ 2,500.00	$ 2,500.00	$ 2,500.00	$ 2,500.00	$503,250.00	$ 0.1115
9	0	0	$3.00	$ 2,600.00	$ 2,600.00	$ 2,600.00	$ 2,600.00	$ 2,600.00	$ 2,600.00	$ 2,600.00	$ 2,600.00	$ 2,600.00	$ 2,600.00	$ 2,600.00	$ 2,600.00	$ 2,600.00	$ 2,600.00	$ 2,600.00	$ 2,600.00	$ 2,600.00	$ 2,600.00	$ 2,600.00	$ 2,600.00	$540,000.00	$ 0.1089
10	0	0	$2.95	$ 2,700.00	$ 2,700.00	$ 2,700.00	$ 2,700.00	$ 2,700.00	$ 2,700.00	$ 2,700.00	$ 2,700.00	$ 2,700.00	$ 2,700.00	$ 2,700.00	$ 2,700.00	$ 2,700.00	$ 2,700.00	$ 2,700.00	$ 2,700.00	$ 2,700.00	$ 2,700.00	$ 2,700.00	$ 2,700.00	$575,250.00	$ 0.1064
																								Bundle:	$ 0.1168
																								Weighted Discounted LCOE:	

Total Purchase Price $ 3,689,250.00

PRODUCTION DATA (kWh) - Include Year 1 modeling output for each site as attached as sample in Section 7 of the Proposal

Site #		Sites	Size (kW DC)	Year 1 *	Year 2	Year 3	Year 4	Year 5	Year 6	Year 7	Year 8	Year 9	Year 10	Year 11	Year 12	Year 13	Year 14	Year 15	Year 16	Year 17	Year 18	Year 19	Year 20	Year 1 Energy Yield (kwh/kwdc)
1	0	0	60	85,000	84,575	84,152	83,731	83,313	82,896	82,482	82,069	81,659	81,251	80,844	80,440	80,038	79,638	79,240	78,843	78,449	78,057	77,667	77,278	1,417
2	0	0	75	110,000	109,450	108,903	108,358	107,816	107,277	106,741	106,207	105,676	105,148	104,622	104,099	103,579	103,061	102,545	102,033	101,522	101,015	100,510	100,007	1,467
3	0	0	105	160,000	159,200	158,404	157,612	156,824	156,040	155,260	154,483	153,711	152,942	152,178	151,417	150,660	149,906	149,157	148,411	147,669	146,931	146,196	145,465	1,524
4	0	0	120	185,000	184,075	183,155	182,239	181,328	180,421	179,519	178,621	177,728	176,840	175,955	175,076	174,200	173,329	172,463	171,600	170,742	169,889	169,039	168,194	1,542
5	0	0	135	210,000	208,950	207,905	206,866	205,831	204,802	203,778	202,759	201,746	200,737	199,733	198,734	197,741	196,752	195,768	194,789	193,816	192,846	191,882	190,923	1,556
7	0	0	150	235,000	233,825	232,656	231,493	230,335	229,183	228,038	226,897	225,763	224,634	223,511	222,393	221,281	220,175	219,074	217,979	216,889	215,804	214,725	213,652	1,567
8	0	0	165	260,000	258,700	257,407	256,119	254,839	253,565	252,297	251,035	249,780	248,531	247,289	246,052	244,822	243,598	242,380	241,168	239,962	238,762	237,568	236,381	1,576
9	0	0	180	285,000	283,575	282,157	280,746	279,343	277,946	276,556	275,173	273,798	272,429	271,066	269,711	268,362	267,021	265,686	264,357	263,035	261,720	260,412	259,110	1,583
10	0	0	195	310,000	308,450	306,908	305,373	303,846	302,327	300,815	299,311	297,815	296,326	294,844	293,370	291,903	290,444	288,991	287,546	286,109	284,678	283,255	281,838	1,590
		Annual Degradation Rate **:		0.5%																				

* Must match estimated output from modeling software for each site in Bid Bundle.

** Assigned as 0.5% per year for all proposals to standardize responses. Deviations may be evaluated based on documented prior performance and/or actual warranties offered.

Total Production: 35,103,343 kWh
Combined System Capacity: 1,185.000 kW DC
20-Year Energy Yield: 29,623 kWh/kW-DC

BUNDLE: Monterey and San Benito Counties
PROPOSER: Insert name

PRICE PROPOSAL FORM

Instructions

All yellow-highlighted cells must be filled by the Proposer. Blue-highlighted cells contain information entered by SEED Fund team and white cells contain formulas. Neither blue nor white cells may be changed by Proposers.
In the Proposal Summary Data section, Proposers must identify PV installation type (i.e. roof-mount, carport, etc.), module information, and inverter information.
In the PPA Price section, Proposers shall enter PPA pricing per site under "Year 1". If applicable, Proposers may enter price escalation rates in the bottom row of the table. If no escalation is provided, proposed escalation shall be assumed to be 0%.
As stated in the body of the RFP and in Attachment E, PPA pricing must include a payment of 1.5% of purchase price to the Participant for reimbursement to the SEED Fund.
Proposers may, but are not required to, submit multiple versions of this sheet to offer various PPA pricing options in regards to price, escalation, and length of term. At a minimum, a 20-year PPA with no initial down payment must be offered.
As an alternative to a standard PPA, on a separate version of this sheet, Proposers may enter Initial Down Payments, along with PPA pricing per site and price escalation rates, as a Pre-paid PPA option.
Below the PPA price table, Proposers have the option of entering PPA pricing discounts that would apply if the given solar capacity is contracted by the given date. Capacity is for all bundles and sites contracted by Proposer.
In Direct Purchase Price section, Proposers must enter $/W-DC under "System Price" for each site. Proposers also must enter cost proposal for 20 years of Operations & Maintenance at each site.
Operations & Maintenance pricing shall be evaluated together with, and separately from, direct purchase pricing, and determination to proceed will be decided by each Participant individually.
In Production Data section, Proposers must enter Year 1 production estimates, as determined by modeling software, with sample submitted in Section 7 of the proposal.
Prices quoted below are for full turn-key system installation, and shall include all taxes and all other charges, including travel expenses, and is the price the applicable Participant will pay for the term of any contract that is a result of this proposal.

Proposal Summary Data

Site #	Participants	Sites	PV Installation Type	Estimated System Size (kW DC)	Estimated Year 1 Production (kWh)	Estimated Yield (kWh/kW DC)	Historical Site Usage (kWh)	Estimated Load Offset (%)	Modules: Make and Model	Modules: Nameplate (Watts-DC)	Modules: Quantity	Inverters: Make and Model	Inverters: Nameplate (kW-AC)	Inverters: Quantity	Inverters: Make and Model	Inverters: Nameplate (kW-AC)	Inverters: Quantity	Inverters: Make and Model	Inverters: Nameplate (kW-AC)	Inverters: Quantity	Inverters: Make and Model	Inverters: Nameplate (kW-AC)	Inverters: Quantity
11	City of Monterey	13 Wharf / Marina		60	85,000	1,417	479,857	18%		300	200												
12	City of Monterey	13 Cannery Row Parking Garage		75	110,000	1,467	431,560	25%		300	250												
13	City of Monterey	31 Franklin and Tyler Parking Garage		90	135,000	1,500	419,301	32%		300	300												
14	City of Monterey	25 Ryan Ranch Corporation Yard		105	160,000	1,524	216,439	74%		300	350												
16	North County Recreation and Park District	North County Recreation Center		120	185,000	1,542	72,768	254%		300	400												
17	City of Pacific Grove	Public Works Yard		135	210,000	1,556	72,949	288%		300	450												
18	City of Pacific Grove	Civic Center		150	235,000	1,567	258,524	91%		300	500												
19	City of San Juan Bautista	Waste Water Treatment Plant		180	285,000	1,583	359,528	79%		300	600												
20	City of Soledad	City Hall		180	285,000	1,583	172,430	165%		300	600												
21	City of Soledad	YMCA		180	285,000	1,583	159,633	179%		300	600												
24	City of Soledad	City Water Booster Pump		180	285,000	1,583	193,328	147%		300	600												
25	Presidio of Monterey - Presidio	POM 422		180	285,000	1,583	361,095	79%		300	600												
26	Presidio of Monterey - Presidio	POM 660		180	285,000	1,583	618,000	46%		300	600												
27	Presidio of Monterey - Presidio	POM 620		180	285,000	1,583	279,004	102%		300	600												
28	Presidio of Monterey - Presidio	POM 848		180	285,000	1,583	1,025,040	28%		300	600												
29	Presidio of Monterey - Presidio	POM 624		180	285,000	1,583	253,343	112%		300	600												
31	Presidio of Monterey - Fort Ord	OMC 4455		180	285,000	1,583	578,006	49%		300	600												
32	Presidio of Monterey - Fort Ord	OMC 4499		180	285,000	1,583	194,571	146%		300	600												
33	Presidio of Monterey - Fort Ord	OMC 4235		180	285,000	1,583	2,112,883	13%		300	600												

PPA PRICE per kWh - Participant keeps all RECs and Environmental Attributes for term of agreement

Site #	Participants	Sites	Initial Down Payment	Year 1	Year 2	Year 3	Year 4	Year 5	Year 6	Year 7	Year 8	Year 9	Year 10	Year 11	Year 12	Year 13	Year 14	Year 15	Year 16	Year 17	Year 18	Year 19	Year 20	Buyout	LCOE ($/kWh)
11	City of Monterey	13 Wharf / Marina	$0.00	$0.1600	$0.1632	$0.1665	$0.1698	$0.1732	$0.1767	$0.1802	$0.1838	$0.1875	$0.1912	$0.1950	$0.1989	$0.2029	$0.2070	$0.2111	$0.2153	$0.2196	$0.2240	$0.2285	$0.2331	FMV	$ 0.1937
12	City of Monterey	13 Cannery Row Parking Garage	$0.00	$0.1595	$0.1627	$0.1659	$0.1693	$0.1726	$0.1761	$0.1796	$0.1832	$0.1869	$0.1906	$0.1944	$0.1983	$0.2022	$0.2063	$0.2105	$0.2147	$0.2190	$0.2233	$0.2278	$0.2324	FMV	$ 0.1931
13	City of Monterey	31 Franklin and Tyler Parking Garage	$0.00	$0.1590	$0.1622	$0.1654	$0.1687	$0.1721	$0.1755	$0.1791	$0.1826	$0.1863	$0.1900	$0.1938	$0.1977	$0.2017	$0.2057	$0.2098	$0.2140	$0.2183	$0.2228	$0.2272	$0.2318	FMV	$ 0.1926
14	City of Monterey	25 Ryan Ranch Corporation Yard	$0.00	$0.1585	$0.1617	$0.1649	$0.1682	$0.1716	$0.1750	$0.1785	$0.1821	$0.1857	$0.1894	$0.1932	$0.1971	$0.2010	$0.2050	$0.2091	$0.2133	$0.2176	$0.2219	$0.2264	$0.2309	FMV	$ 0.1919
16	North County Recreation and Park District	North County Recreation Center	$0.00	$0.1580	$0.1612	$0.1644	$0.1677	$0.1710	$0.1744	$0.1779	$0.1815	$0.1851	$0.1888	$0.1926	$0.1965	$0.2004	$0.2044	$0.2085	$0.2126	$0.2169	$0.2212	$0.2257	$0.2302	FMV	$ 0.1913
17	City of Pacific Grove	Public Works Yard	$0.00	$0.1575	$0.1607	$0.1639	$0.1671	$0.1705	$0.1739	$0.1774	$0.1809	$0.1845	$0.1882	$0.1920	$0.1958	$0.1997	$0.2037	$0.2078	$0.2120	$0.2162	$0.2205	$0.2249	$0.2294	FMV	$ 0.1907
18	City of Pacific Grove	Civic Center	$0.00	$0.1570	$0.1601	$0.1633	$0.1666	$0.1699	$0.1733	$0.1768	$0.1803	$0.1840	$0.1876	$0.1914	$0.1952	$0.1991	$0.2031	$0.2072	$0.2113	$0.2155	$0.2198	$0.2242	$0.2287	FMV	$ 0.1901
19	City of San Juan Bautista	Waste Water Treatment Plant	$0.00	$0.1560	$0.1591	$0.1623	$0.1655	$0.1689	$0.1722	$0.1757	$0.1792	$0.1828	$0.1864	$0.1902	$0.1940	$0.1978	$0.2018	$0.2058	$0.2100	$0.2142	$0.2184	$0.2228	$0.2273	FMV	$ 0.1889
20	City of Soledad	City Hall	$0.00	$0.1560	$0.1591	$0.1623	$0.1655	$0.1689	$0.1722	$0.1757	$0.1792	$0.1828	$0.1864	$0.1902	$0.1940	$0.1978	$0.2018	$0.2058	$0.2100	$0.2142	$0.2184	$0.2228	$0.2273	FMV	$ 0.1889
21	City of Soledad	YMCA	$0.00	$0.1560	$0.1591	$0.1623	$0.1655	$0.1689	$0.1722	$0.1757	$0.1792	$0.1828	$0.1864	$0.1902	$0.1940	$0.1978	$0.2018	$0.2058	$0.2100	$0.2142	$0.2184	$0.2228	$0.2273	FMV	$ 0.1889
24	City of Soledad	City Water Booster Pump	$0.00	$0.1560	$0.1591	$0.1623	$0.1655	$0.1689	$0.1722	$0.1757	$0.1792	$0.1828	$0.1864	$0.1902	$0.1940	$0.1978	$0.2018	$0.2058	$0.2100	$0.2142	$0.2184	$0.2228	$0.2273	FMV	$ 0.1889
25	Presidio of Monterey - Presidio	POM 422	$0.00	$0.1560	$0.1591	$0.1623	$0.1655	$0.1689	$0.1722	$0.1757	$0.1792	$0.1828	$0.1864	$0.1902	$0.1940	$0.1978	$0.2018	$0.2058	$0.2100	$0.2142	$0.2184	$0.2228	$0.2273	FMV	$ 0.1889
26	Presidio of Monterey - Presidio	POM 660	$0.00	$0.1560	$0.1591	$0.1623	$0.1655	$0.1689	$0.1722	$0.1757	$0.1792	$0.1828	$0.1864	$0.1902	$0.1940	$0.1978	$0.2018	$0.2058	$0.2100	$0.2142	$0.2184	$0.2228	$0.2273	FMV	$ 0.1889
27	Presidio of Monterey - Presidio	POM 620	$0.00	$0.1560	$0.1591	$0.1623	$0.1655	$0.1689	$0.1722	$0.1757	$0.1792	$0.1828	$0.1864	$0.1902	$0.1940	$0.1978	$0.2018	$0.2058	$0.2100	$0.2142	$0.2184	$0.2228	$0.2273	FMV	$ 0.1889
28	Presidio of Monterey - Presidio	POM 848	$0.00	$0.1560	$0.1591	$0.1623	$0.1655	$0.1689	$0.1722	$0.1757	$0.1792	$0.1828	$0.1864	$0.1902	$0.1940	$0.1978	$0.2018	$0.2058	$0.2100	$0.2142	$0.2184	$0.2228	$0.2273	FMV	$ 0.1889
29	Presidio of Monterey - Presidio	POM 624	$0.00	$0.1560	$0.1591	$0.1623	$0.1655	$0.1689	$0.1722	$0.1757	$0.1792	$0.1828	$0.1864	$0.1902	$0.1940	$0.1978	$0.2018	$0.2058	$0.2100	$0.2142	$0.2184	$0.2228	$0.2273	FMV	$ 0.1889
30	Presidio of Monterey - Fort Ord	OMC 4455	$0.00	$0.1560	$0.1591	$0.1623	$0.1655	$0.1689	$0.1722	$0.1757	$0.1792	$0.1828	$0.1864	$0.1902	$0.1940	$0.1978	$0.2018	$0.2058	$0.2100	$0.2142	$0.2184	$0.2228	$0.2273	FMV	$ 0.1889
31	Presidio of Monterey - Fort Ord	OMC 4499	$0.00	$0.1560	$0.1591	$0.1623	$0.1655	$0.1689	$0.1722	$0.1757	$0.1792	$0.1828	$0.1864	$0.1902	$0.1940	$0.1978	$0.2018	$0.2058	$0.2100	$0.2142	$0.2184	$0.2228	$0.2273	FMV	$ 0.1889
32	Presidio of Monterey - Fort Ord	OMC 4235	$0.00	$0.1560	$0.1591	$0.1623	$0.1655	$0.1689	$0.1722	$0.1757	$0.1792	$0.1828	$0.1864	$0.1902	$0.1940	$0.1978	$0.2018	$0.2058	$0.2100	$0.2142	$0.2184	$0.2228	$0.2273	FMV	$ 0.1889
		Annual Escalation Rate:	2.00%	2.00%	2.00%	2.00%	2.00%	2.00%	2.00%	2.00%	2.00%	2.00%	2.00%	2.00%	2.00%	2.00%	2.00%	2.00%	2.00%	2.00%	2.00%	2.00%	2.00%	Bundle:	$ 0.1895
																								Weighted Discounted LCOE:	$ 0.1861

Weighted Average PPA Price $0.1565

Group PPA Discount 5.0%

Net Average PPA Price After Average Group Discount $0.1487

Optional Discounts for Scale and Speed

Size	Contracted by: October 31, 2016	December 31, 2016	February 28, 2017
1 - 2 MW-DC	4.0%	3.0%	2.0%
2 - 5 MW-DC	6.0%	5.0%	4.0%
5+ MW-DC	8.0%	7.0%	6.0%

Direct Purchase Price - Participant keeps all RECs and Environmental Attributes for term of agreement

Site #	Participants	Sites	System Price ($/W-DC)	Operations & Maintenance Cost Proposal: Year 1	Year 2	Year 3	Year 4	Year 5	Year 6	Year 7	Year 8	Year 9	Year 10	Year 11	Year 12	Year 13	Year 14	Year 15	Year 16	Year 17	Year 18	Year 19	Year 20	Total Purchase Price	LCOE ($/kWh)
11	City of Monterey	13 Wharf / Marina	$3.40	$ 1,800.00	$ 1,800.00	$ 1,800.00	$ 1,800.00	$ 1,800.00	$ 1,800.00	$ 1,800.00	$1,800.00	$ 1,800.00	$ 1,800.00	$1,800.00	$ 1,800.00	$ 1,800.00	$1,800.00	$ 1,800.00	$ 1,800.00	$1,800.00	$ 1,800.00	$ 1,800.00	$ 1,800.00	$204,000.00	$ 0.1480
12	City of Monterey	13 Cannery Row Parking Garage	$3.35	$ 1,900.00	$ 1,900.00	$ 1,900.00	$ 1,900.00	$ 1,900.00	$ 1,900.00	$ 1,900.00	$1,900.00	$ 1,900.00	$ 1,900.00	$1,900.00	$ 1,900.00	$ 1,900.00	$1,900.00	$ 1,900.00	$ 1,900.00	$1,900.00	$ 1,900.00	$ 1,900.00	$ 1,900.00	$251,250.00	$ 0.1378
13	City of Monterey	31 Franklin and Tyler Parking Garage	$3.30	$ 2,000.00	$ 2,000.00	$ 2,000.00	$ 2,000.00	$ 2,000.00	$ 2,000.00	$ 2,000.00	$2,000.00	$ 2,000.00	$ 2,000.00	$2,000.00	$ 2,000.00	$ 2,000.00	$2,000.00	$ 2,000.00	$ 2,000.00	$2,000.00	$ 2,000.00	$ 2,000.00	$ 2,000.00	$297,000.00	$ 0.1306
14	City of Monterey	25 Ryan Ranch Corporation Yard	$3.25	$ 2,100.00	$ 2,100.00	$ 2,100.00	$ 2,100.00	$ 2,100.00	$ 2,100.00	$ 2,100.00	$2,100.00	$ 2,100.00	$ 2,100.00	$2,100.00	$ 2,100.00	$ 2,100.00	$2,100.00	$ 2,100.00	$ 2,100.00	$2,100.00	$ 2,100.00	$ 2,100.00	$ 2,100.00	$341,250.00	$ 0.1235
16	North County Recreation and Park District	North County Recreation Center	$3.20	$ 2,200.00	$ 2,200.00	$ 2,200.00	$ 2,200.00	$ 2,200.00	$ 2,200.00	$ 2,200.00	$2,200.00	$ 2,200.00	$ 2,200.00	$2,200.00	$ 2,200.00	$ 2,200.00	$2,200.00	$ 2,200.00	$ 2,200.00	$2,200.00	$ 2,200.00	$ 2,200.00	$ 2,200.00	$384,000.00	$ 0.1213
17	City of Pacific Grove	Public Works Yard	$3.15	$ 2,300.00	$ 2,300.00	$ 2,300.00	$ 2,300.00	$ 2,300.00	$ 2,300.00	$ 2,300.00	$2,300.00	$ 2,300.00	$ 2,300.00	$2,300.00	$ 2,300.00	$ 2,300.00	$2,300.00	$ 2,300.00	$ 2,300.00	$2,300.00	$ 2,300.00	$ 2,300.00	$ 2,300.00	$425,250.00	$ 0.1176
18	City of Pacific Grove	Civic Center	$3.10	$ 2,400.00	$ 2,400.00	$ 2,400.00	$ 2,400.00	$ 2,400.00	$ 2,400.00	$ 2,400.00	$2,400.00	$ 2,400.00	$ 2,400.00	$2,400.00	$ 2,400.00	$ 2,400.00	$2,400.00	$ 2,400.00	$ 2,400.00	$2,400.00	$ 2,400.00	$ 2,400.00	$ 2,400.00	$465,000.00	$ 0.1144
19	City of San Juan Bautista	Waste Water Treatment Plant	$3.00	$ 2,600.00	$ 2,600.00	$ 2,600.00	$ 2,600.00	$ 2,600.00	$ 2,600.00	$ 2,600.00	$2,600.00	$ 2,600.00	$ 2,600.00	$2,600.00	$ 2,600.00	$ 2,600.00	$2,600.00	$ 2,600.00	$ 2,600.00	$2,600.00	$ 2,600.00	$ 2,600.00	$ 2,600.00	$540,000.00	$ 0.1089
20	City of Soledad	City Hall	$3.00	$ 2,600.00	$ 2,600.00	$ 2,600.00	$ 2,600.00	$ 2,600.00	$ 2,600.00	$ 2,600.00	$2,600.00	$ 2,600.00	$ 2,600.00	$2,600.00	$ 2,600.00	$ 2,600.00	$2,600.00	$ 2,600.00	$ 2,600.00	$2,600.00	$ 2,600.00	$ 2,600.00	$ 2,600.00	$540,000.00	$ 0.1089
21	City of Soledad	YMCA	$3.00	$ 2,600.00	$ 2,600.00	$ 2,600.00	$ 2,600.00	$ 2,600.00	$ 2,600.00	$ 2,600.00	$2,600.00	$ 2,600.00	$ 2,600.00	$2,600.00	$ 2,600.00	$ 2,600.00	$2,600.00	$ 2,600.00	$ 2,600.00	$2,600.00	$ 2,600.00	$ 2,600.00	$ 2,600.00	$540,000.00	$ 0.1089
24	City of Soledad	City Water Booster Pump	$3.00	$ 2,600.00	$ 2,600.00	$ 2,600.00	$ 2,600.00	$ 2,600.00	$ 2,600.00	$ 2,600.00	$2,600.00	$ 2,600.00	$ 2,600.00	$2,600.00	$ 2,600.00	$ 2,600.00	$2,600.00	$ 2,600.00	$ 2,600.00	$2,600.00	$ 2,600.00	$ 2,600.00	$ 2,600.00	$540,000.00	$ 0.1089
25	Presidio of Monterey - Presidio	POM 422	$3.00	$ 2,600.00	$ 2,600.00	$ 2,600.00	$ 2,600.00	$ 2,600.00	$ 2,600.00	$ 2,600.00	$2,600.00	$ 2,600.00	$ 2,600.00	$2,600.00	$ 2,600.00	$ 2,600.00	$2,600.00	$ 2,600.00	$ 2,600.00	$2,600.00	$ 2,600.00	$ 2,600.00	$ 2,600.00	$540,000.00	$ 0.1089
26	Presidio of Monterey - Presidio	POM 660	$3.00	$ 2,600.00	$ 2,600.00	$ 2,600.00	$ 2,600.00	$ 2,600.00	$ 2,600.00	$ 2,600.00	$2,600.00	$ 2,600.00	$ 2,600.00	$2,600.00	$ 2,600.00	$ 2,600.00	$2,600.00	$ 2,600.00	$ 2,600.00	$2,600.00	$ 2,600.00	$ 2,600.00	$ 2,600.00	$540,000.00	$ 0.1089
27	Presidio of Monterey - Presidio	POM 620	$3.00	$ 2,600.00	$ 2,600.00	$ 2,600.00	$ 2,600.00	$ 2,600.00	$ 2,600.00	$ 2,600.00	$2,600.00	$ 2,600.00	$ 2,600.00	$2,600.00	$ 2,600.00	$ 2,600.00	$2,600.00	$ 2,600.00	$ 2,600.00	$2,600.00	$ 2,600.00	$ 2,600.00	$ 2,600.00	$540,000.00	$ 0.1089
28	Presidio of Monterey - Presidio	POM 848	$3.00	$ 2,600.00	$ 2,600.00	$ 2,600.00	$ 2,600.00	$ 2,600.00	$ 2,600.00	$ 2,600.00	$2,600.00	$ 2,600.00	$ 2,600.00	$2,600.00	$ 2,600.00	$ 2,600.00	$2,600.00	$ 2,600.00	$ 2,600.00	$2,600.00	$ 2,600.00	$ 2,600.00	$ 2,600.00	$540,000.00	$ 0.1089
29	Presidio of Monterey - Presidio	POM 624	$3.00	$ 2,600.00	$ 2,600.00	$ 2,600.00	$ 2,600.00	$ 2,600.00	$ 2,600.00	$ 2,600.00	$2,600.00	$ 2,600.00	$ 2,600.00	$2,600.00	$ 2,600.00	$ 2,600.00	$2,600.00	$ 2,600.00	$ 2,600.00	$2,600.00	$ 2,600.00	$ 2,600.00	$ 2,600.00	$540,000.00	$ 0.1089
30	Presidio of Monterey - Fort Ord	OMC 4455	$3.00	$ 2,600.00	$ 2,600.00	$ 2,600.00	$ 2,600.00	$ 2,600.00	$ 2,600.00	$ 2,600.00	$2,600.00	$ 2,600.00	$ 2,600.00	$2,600.00	$ 2,600.00	$ 2,600.00	$2,600.00	$ 2,600.00	$ 2,600.00	$2,600.00	$ 2,600.00	$ 2,600.00	$ 2,600.00	$540,000.00	$ 0.1089
31	Presidio of Monterey - Fort Ord	OMC 4499	$3.00	$ 2,600.00	$ 2,600.00	$ 2,600.00	$ 2,600.00	$ 2,600.00	$ 2,600.00	$ 2,600.00	$2,600.00	$ 2,600.00	$ 2,600.00	$2,600.00	$ 2,600.00	$ 2,600.00	$2,600.00	$ 2,600.00	$ 2,600.00	$2,600.00	$ 2,600.00	$ 2,600.00	$ 2,600.00	$540,000.00	$ 0.1089
32	Presidio of Monterey - Fort Ord	OMC 4235	$2.95	$ 2,700.00	$ 2,700.00	$ 2,700.00	$ 2,700.00	$ 2,700.00	$ 2,700.00	$ 2,700.00	$2,700.00	$ 2,700.00	$ 2,700.00	$2,700.00	$ 2,700.00	$ 2,700.00	$2,700.00	$ 2,700.00	$ 2,700.00	$2,700.00	$ 2,700.00	$ 2,700.00	$ 2,700.00	$531,900.00	$ 0.1076
																								Bundle:	$ 0.1127
																								Weighted Discounted LCOE:	$ 0.1070

Total Purchase Price $ 8,838,750.00

Group Purchase Discount 5.0%

Net Purchase Price After Average Group Discount $ 8,396,812.50

Optional Discounts for Scale and Speed

Size	Contracted by: May 31, 2016	July 31, 2016	September 30, 2016
1 - 2 MW-DC	4.0%	3.0%	2.0%
2 - 5 MW-DC	6.0%	5.0%	4.0%
5+ MW-DC	8.0%	7.0%	6.0%

PRODUCTION DATA (kWh) - Include Year 1 modeling output for each site as attached as sample in Section 7 of the Proposal

Site #	Participants	Sites	Size (kW DC)	Year 1 *	Year 2	Year 3	Year 4	Year 5	Year 6	Year 7	Year 8	Year 9	Year 10	Year 11	Year 12	Year 13	Year 14	Year 15	Year 16	Year 17	Year 18	Year 19	Year 20	Year 1 Energy Yield (kwh/kwdc)
11	City of Monterey	13 Wharf / Marina	60	85,000	84,575	84,152	83,731	83,313	82,896	82,482	82,069	81,659	81,251	80,844	80,440	80,038	79,638	79,240	78,843	78,449	78,057	77,667	77,278	1,417
12	City of Monterey	13 Cannery Row Parking Garage	75	110,000	109,450	108,903	108,358	107,816	107,277	106,741	106,207	105,676	105,148	104,622	104,099	103,579	103,061	102,545	102,033	101,522	101,015	100,510	100,007	1,467
13	City of Monterey	31 Franklin and Tyler Parking Garage	90	135,000	134,325	133,653	132,985	132,320	131,659	131,000	130,345	129,694	129,045	128,400	127,758	127,119	126,483	125,851	125,222	124,596	123,973	123,353	122,736	1,500
14	City of Monterey	25 Ryan Ranch Corporation Yard	105	160,000	159,200	158,404	157,612	156,824	156,040	155,260	154,483	153,711	152,942	152,178	151,417	150,660	149,906	149,157	148,411	147,669	146,931	146,196	145,465	1,524
16	North County Recreation and Park District	North County Recreation Center	120	185,000	184,075	183,155	182,239	181,328	180,421	179,519	178,621	177,728	176,840	175,955	175,076	174,200	173,329	172,463	171,600	170,742	169,888	169,039	168,194	1,542
17	City of Pacific Grove	Public Works Yard	135	210,000	208,950	207,906	206,866	205,831	204,802	203,778	202,759	201,745	200,737	199,733	198,734	197,741	196,752	195,768	194,789	193,816	192,846	191,882	190,923	1,556
18	City of Pacific Grove	Civic Center	150	235,000	233,825	232,656	231,493	230,335	229,183	228,038	226,897	225,763	224,634	223,511	222,393	221,281	220,175	219,074	217,979	216,889	215,804	214,725	213,652	1,567
19	City of San Juan Bautista	Waste Water Treatment Plant	180	285,000	283,575	282,157	280,746	279,343	277,946	276,556	275,173	273,798	272,429	271,066	269,711	268,362	267,021	265,686	264,357	263,035	261,720	260,412	259,110	1,583
20	City of Soledad	City Hall	180	285,000	283,575	282,157	280,746	279,343	277,946	276,556	275,173	273,798	272,429	271,066	269,711	268,362	267,021	265,686	264,357	263,035	261,720	260,412	259,110	1,583
21	City of Soledad	YMCA	180	285,000	283,575	282,157	280,746	279,343	277,946	276,556	275,173	273,798	272,429	271,066	269,711	268,362	267,021	265,686	264,357	263,035	261,720	260,412	259,110	1,583
24	City of Soledad	City Water Booster Pump	180	285,000	283,575	282,157	280,746	279,343	277,946	276,556	275,173	273,798	272,429	271,066	269,711	268,362	267,021	265,686	264,357	263,035	261,720	260,412	259,110	1,583
25	Presidio of Monterey - Presidio	POM 422	180	285,000	283,575	282,157	280,746	279,343	277,946	276,556	275,173	273,798	272,429	271,066	269,711	268,362	267,021	265,686	264,357	263,035	261,720	260,412	259,110	1,583
26	Presidio of Monterey - Presidio	POM 660	180	285,000	283,575	282,157	280,746	279,343	277,946	276,556	275,173	273,798	272,429	271,066	269,711	268,362	267,021	265,686	264,357	263,035	261,720	260,412	259,110	1,583
27	Presidio of Monterey - Presidio	POM 620	180	285,000	283,575	282,157	280,746	279,343	277,946	276,556	275,173	273,798	272,429	271,066	269,711	268,362	267,021	265,686	264,357	263,035	261,720	260,412	259,110	1,583
28	Presidio of Monterey - Presidio	POM 848	180	285,000	283,575	282,157	280,746	279,343	277,946	276,556	275,173	273,798	272,429	271,066	269,711	268,362	267,021	265,686	264,357	263,035	261,720	260,412	259,110	1,583
29	Presidio of Monterey - Presidio	POM 624	180	285,000	283,575	282,157	280,746	279,343	277,946	276,556	275,173	273,798	272,429	271,066	269,711	268,362	267,021	265,686	264,357	263,035	261,720	260,412	259,110	1,583
30	Presidio of Monterey - Fort Ord	OMC 4455	180	285,000	283,575	282,157	280,746	279,343	277,946	276,556	275,173	273,798	272,429	271,066	269,711	268,362	267,021	265,686	264,357	263,035	261,720	260,412	259,110	1,583
31	Presidio of Monterey - Fort Ord	OMC 4499	180	285,000	283,575	282,157	280,746	279,343	277,946	276,556	275,173	273,798	272,429	271,066	269,711	268,362	267,021	265,686	264,357	263,035	261,720	260,412	259,110	1,583
32	Presidio of Monterey - Fort Ord	OMC 4455	180	285,000	283,575	282,157	280,746	279,343	277,946	276,556	275,173	273,798	272,429	271,066	269,711	268,362	267,021	265,686	264,357	263,035	261,720	260,412	259,110	1,583
33	Presidio of Monterey - Fort Ord	OMC 4499	180	285,000	283,575	282,157	280,746	279,343	277,946	276,556	275,173	273,798	272,429	271,066	269,711	268,362	267,021	265,686	264,357	263,035	261,720	260,412	259,110	1,583
		Annual Degradation Rate **	0.5%																					

* Must match estimated output from modeling software for each site in Bid Bundle.
** Assigned as 0.5% per year for all proposals to standardize responses. Deviations may be evaluated based on documented prior performance and/or actual warranties offered.

Total Production: 86,613,684 kWh
Combined System Capacity: 2,895.000 kW DC
20-Year Energy Yield: 29,918 kWh/kW-DC

BUNDLE: Bid Alternates - Individual Sites
PROPOSER: Insert name

PRICE PROPOSAL FORM

Instructions

All yellow-highlighted cells must be filled by the Proposer. Blue-highlighted cells contain information entered by SEED Fund team and white cells contain formulas. Neither blue nor white cells may be changed by Proposers.
In the Proposal Summary Data section, Proposers must identify PV installation type (i.e. roof-mount, carport, etc.), module information, and inverter information.
In the PPA Price section, Proposers shall enter PPA pricing per site under "Year 1". If applicable, Proposers may enter price escalation rates in the bottom row of the table. If no escalation is provided, proposed escalation shall be assumed to be 0%.
As stated in the body of the RFP and in Attachment E, PPA pricing must include a payment of 0.5% of purchase price to the Participant for reimbursement to the SEED Fund.
Proposers may, but are not required to, submit multiple versions of this sheet to offer various PPA pricing options in regards to price, escalation, and length of term. At a minimum, a 20-year PPA with no initial down payment must be offered.
As an alternative to a standard PPA, on a separate version of this sheet, Proposers may enter Initial Down Payments, along with PPA pricing per site and price escalation rates, as a Pre-paid PPA option.
Below the PPA price table, Proposers have the option of entering PPA pricing discounts that would apply if the given solar capacity is contracted by the given date. Capacity is for all bundles and sites contracted by Proposer.
In Direct Purchase Price section, Proposers must enter $/W-DC under "System Price" for each site. Proposers also must enter cost proposal for 20 years of Operations & Maintenance at each site.
Operations & Maintenance pricing shall be evaluated together with, and separately from, direct purchase pricing, and determination to proceed will be decided by each Participant individually.
In Production Data section, Proposers must enter Year 1 production estimates, as determined by modeling software, with sample submitted in Section 7 of the proposal.
Prices quoted below are for full turn-key system installation, and shall include all taxes and all other charges, including travel expenses, and is the price the applicable Participant will pay for the term of any contract that is a result of this proposal.

Proposal Summary Data

Site #	Participants	Sites	PV Installation Type	Estimated System Size (kW DC)	Estimated Year 1 Production (kWh)	Estimated Yield (kWh/kW DC)	Historical Site Usage (kWh)	Estimated Load Offset (%)	Modules			Inverters			Inverters			Inverters			Inverters		
									Make and Model	Nameplate (Watts-DC)	Quantity	Make and Model	Nameplate (kW-AC)	Quantity	Make and Model	Nameplate (kW-AC)	Quantity	Make and Model	Nameplate (kW-AC)	Quantity	Make and Model	Nameplate (kW-AC)	Quantity
6	County of Santa Cruz	Ben Lomond Transfer Station		60	85,000	1,417	-	#DIV/0!		300	200												
15	City of Monterey	Ryan Ranch Corporation Yard Backlot		75	110,000	1,467	-	#DIV/0!		300	250												
22	City of Soledad	WWTP		180	285,000	1,583	-	#DIV/0!		300	600												
23	City of Soledad	Old Landfill		195	310,000	1,590	-	#DIV/0!		300	650												

PPA PRICE per kWh - Participant keeps all RECs and Environmental Attributes for term of agreement

Site #		Sites	Initial Down Payment	Year 1	Year 2	Year 3	Year 4	Year 5	Year 6	Year 7	Year 8	Year 9	Year 10	Year 11	Year 12	Year 13	Year 14	Year 15	Year 16	Year 17	Year 18	Year 19	Year 20	Buyout	LCOE ($/kWh)
6	County of Santa Cruz	Ben Lomond Transfer Station	$0.00	$0.1600	$0.1632	$0.1665	$0.1698	$0.1732	$0.1767	$0.1802	$0.1838	$0.1875	$0.1912	$0.1950	$0.1989	$0.2029	$0.2070	$0.2111	$0.2153	$0.2196	$0.2240	$0.2285	$0.2331	FMV	$ 0.1937
15	City of Monterey	Ryan Ranch Corporation Yard Backlot	$0.00	$0.1595	$0.1627	$0.1659	$0.1693	$0.1726	$0.1761	$0.1796	$0.1832	$0.1869	$0.1906	$0.1944	$0.1983	$0.2023	$0.2063	$0.2105	$0.2147	$0.2190	$0.2233	$0.2278	$0.2324	FMV	$ 0.1931
22	City of Soledad	WWTP	$0.00	$0.1560	$0.1591	$0.1623	$0.1655	$0.1689	$0.1722	$0.1757	$0.1792	$0.1828	$0.1864	$0.1902	$0.1940	$0.1978	$0.2018	$0.2058	$0.2100	$0.2142	$0.2184	$0.2228	$0.2273	FMV	$ 0.1889
23	City of Soledad	Old Landfill	$0.00	$0.1555	$0.1586	$0.1618	$0.1650	$0.1683	$0.1717	$0.1751	$0.1786	$0.1822	$0.1858	$0.1896	$0.1933	$0.1972	$0.2012	$0.2052	$0.2093	$0.2135	$0.2177	$0.2221	$0.2265	FMV	$ 0.1883
			Annual Escalation Rate:	2.00%	2.00%	2.00%	2.00%	2.00%	2.00%	2.00%	2.00%	2.00%	2.00%	2.00%	2.00%	2.00%	2.00%	2.00%	2.00%	2.00%	2.00%	2.00%	2.00%	Bundle:	$ 0.1898
																								Weighted Discounted LCOE:	$ 0.1803

Weighted Average PPA Price	$0.1567
Group PPA Discount	5.0%
Net Average PPA Price After Average Group Discount	$0.1489

Optional Discounts for Scale and Speed

Size	Contracted by: October 31, 2016	December 31, 2016	February 28, 2017
1 - 2 MW-DC	4.0%	3.0%	2.0%
2 - 5 MW-DC	6.0%	5.0%	4.0%
5+ MW-DC	8.0%	7.0%	6.0%

Direct Purchase Price - Participant keeps all RECs and Environmental Attributes for term of agreement

Site #		Sites	System Price ($/W-DC)	Operations & Maintenance Cost Proposal Year 1	Year 2	Year 3	Year 4	Year 5	Year 6	Year 7	Year 8	Year 9	Year 10	Year 11	Year 12	Year 13	Year 14	Year 15	Year 16	Year 17	Year 18	Year 19	Year 20	Total Purchase Price	LCOE ($/kWh)
6	County of Santa Cruz	Ben Lomond Transfer Station	$3.40	$ 1,800.00	$ 1,800.00	$ 1,800.00	$ 1,800.00	$ 1,800.00	$ 1,800.00	$ 1,800.00	$ 1,800.00	$ 1,800.00	$ 1,800.00	$ 1,800.00	$ 1,800.00	$ 1,800.00	$ 1,800.00	$ 1,800.00	$ 1,800.00	$ 1,800.00	$ 1,800.00	$ 1,800.00	$ 1,800.00	$204,000.00	$ 0.1480
15	City of Monterey	Ryan Ranch Corporation Yard Backlot	$3.35	$ 1,900.00	$ 1,900.00	$ 1,900.00	$ 1,900.00	$ 1,900.00	$ 1,900.00	$ 1,900.00	$ 1,900.00	$ 1,900.00	$ 1,900.00	$ 1,900.00	$ 1,900.00	$ 1,900.00	$ 1,900.00	$ 1,900.00	$ 1,900.00	$ 1,900.00	$ 1,900.00	$ 1,900.00	$ 1,900.00	$251,250.00	$ 0.1378
22	City of Soledad	WWTP	$3.00	$ 2,600.00	$ 2,600.00	$ 2,600.00	$ 2,600.00	$ 2,600.00	$ 2,600.00	$ 2,600.00	$ 2,600.00	$ 2,600.00	$ 2,600.00	$ 2,600.00	$ 2,600.00	$ 2,600.00	$ 2,600.00	$ 2,600.00	$ 2,600.00	$ 2,600.00	$ 2,600.00	$ 2,600.00	$ 2,600.00	$540,000.00	$ 0.1089
23	City of Soledad	Old Landfill	$2.95	$ 2,700.00	$ 2,700.00	$ 2,700.00	$ 2,700.00	$ 2,700.00	$ 2,700.00	$ 2,700.00	$ 2,700.00	$ 2,700.00	$ 2,700.00	$ 2,700.00	$ 2,700.00	$ 2,700.00	$ 2,700.00	$ 2,700.00	$ 2,700.00	$ 2,700.00	$ 2,700.00	$ 2,700.00	$ 2,700.00	$575,250.00	$ 0.1064
																								Bundle:	$ 0.1161
																								Weighted Discounted LCOE:	$ 0.1103

Total Purchase Price	$ 1,570,500.00
Group Purchase Discount	5.0%
Net Purchase Price After Average Group Discount	$ 1,491,975.00

Optional Discounts for Scale and Speed

Size	Contracted by: May 31, 2016	July 31, 2016	September 30, 2016
1 - 2 MW-DC	4.0%	3.0%	2.0%
2 - 5 MW-DC	6.0%	5.0%	4.0%
5+ MW-DC	8.0%	7.0%	6.0%

PRODUCTION DATA (kWh) - Include Year 1 modeling output for each site as attached as sample in Section 7 of the Proposal

Site #		Sites	Size (kW DC)	Year 1 *	Year 2	Year 3	Year 4	Year 5	Year 6	Year 7	Year 8	Year 9	Year 10	Year 11	Year 12	Year 13	Year 14	Year 15	Year 16	Year 17	Year 18	Year 19	Year 20	Year 1 Energy Yield (kwh/kwdc)
6	County of Santa Cruz	Ben Lomond Transfer Station	60	85,000	84,575	84,152	83,731	83,313	82,896	82,482	82,069	81,659	81,251	80,844	80,440	80,038	79,638	79,240	78,843	78,449	78,057	77,667	77,278	1,417
15	City of Monterey	Ryan Ranch Corporation Yard Backlot	75	110,000	109,450	108,903	108,358	107,816	107,277	106,741	106,207	105,676	105,148	104,622	104,099	103,579	103,061	102,545	102,033	101,522	101,015	100,510	100,007	1,467
22	City of Soledad	WWTP	180	285,000	283,575	282,157	280,746	279,343	277,946	276,556	275,173	273,798	272,429	271,066	269,711	268,362	267,021	265,686	264,357	263,035	261,720	260,412	259,110	1,583
23	City of Soledad	Old Landfill	195	310,000	308,450	306,908	305,373	303,846	302,327	300,815	299,311	297,815	296,326	294,844	293,370	291,903	290,444	288,991	287,546	286,109	284,678	283,255	281,838	1,590
			Annual Degradation Rate **:	0.5%																				

* Must match estimated output from modeling software for each site in Bid Bundle.

** Assigned as 0.5% per year for all proposals to standardize responses. Deviations may be evaluated based on documented prior performance and/or actual warranties offered.

Total Production:	15,071,544	kWh
Combined System Capacity:	510.000	kW DC
20-Year Energy Yield:	29,552	kWh/kW-DC

Attachment H
Designation of Subcontractors

Respondent shall complete the form below for each Subcontractor. A Subcontractor is one who: (1) performs Work or labor; or (2) provides a service to the Respondent**. If there are no subcontractors, please state "NONE".**

SUBCONTRACTORS			
NAME	**CA LICENSE #**	**LOCATION OF BUSINESS**	**WORK**

SIGNATURE BLOCK

Respondent Signature:_____Date:_____

Respondent's Name &
Title (Print): _____

ATTACHMENT I
SEED FUND REIMBURSEMENT ACKNOWLEDGEMENT FORM

NOTICE TO PROPOSERS:

The City, Participants and the SEED Fund team have spent significant time, effort, and cost to evaluate solar potential on Participant facilities and pursue the procurement and contracting of solar projects with successful Proposers under a revolving fund grant. Further, the stated purpose of the SEED Fund is to enable ongoing development of renewable energy and energy efficiency projects across the region to benefit the regional environment and economy.

Once Power Purchase Agreement or other financed contracts are executed, Participants have agreed to reimburse the SEED Fund for their professional services at the rate of 3.5% of the total project value in current dollars (calculated as total final direct purchase price multiplied by 0.035). Final contracts between Participants and Proposers will include direction for Proposers to provide these funds to Participants once construction has received a Notice to Proceed, for the purpose of reimbursing the SEED Fund.

Therefore, Proposers are requested to build this cost into their proposals for Power Purchase Agreements as an essential project evaluation, development and contracting professional service. Direct Purchase pricing should NOT include these costs. However, the SEED Fund reimbursement will be accounted for in the Direct Purchase price evaluation during proposal reviews to provide participants with a full cost comparison between Power Purchase Agreements and Direct Purchase inclusive of this reimbursement cost.

The Proposer acknowledges this request and has included the incremental costs of the SEED Fund Reimbursement into their Power Purchase Agreement pricing.

SIGNATURE OF Proposer

_____

Print or Type Name, Title, Proposer Organization

_____

_____

DATED: _____

Attachment J
Non-Collusion Declaration

TO BE EXECUTED BY RESPONDENT AND SUBMITTED WITH Proposal

I,_____, am the
(Name)

_____ of _____,
(Position/Title) (Company)
the party making the foregoing Proposal that the Proposal is not made in the interest of, or on behalf of, any undisclosed person, partnership, company, association, organization, or corporation; that the Proposal is genuine and not collusive or sham; that the respondent has not directly or indirectly induced or solicited any other respondent to put in a false or sham Proposal; and has not directly or indirectly colluded, conspired, connived, or agreed with any respondent or anyone else to put in a sham Proposal, or that anyone shall refrain from bidding; that the respondent has not in any manner directly or indirectly, sought by agreement, communication, or conference with anyone to fix the bid price of the respondent or any other respondent, or to fix any overhead, profit, or cost element of the bid price, or of that of any other respondent, or to secure any advantage against the public body awarding the contract of anyone interested in the proposed contract; that all statements contained in the Proposal are true; and, further, that the respondent has not, directly or indirectly, submitted his or her bid price or any breakdown thereof, or the contents thereof, or divulged information or data relative thereto, or paid, and will not pay, any fee to any corporation, partnership, company association, organization, bid depository, or to any member or agent thereof to effectuate a collusive or sham bid.

I declare under penalty of perjury under the laws of the State of California that the foregoing is true and correct:

_____ _____
(Date) Signature of Authorized Representative

_____ _____
Name of Bidder (Firm, Corp., Individual) Title of Authorized Representative

ATTACHMENT K
RESPONSE CHECKLIST

Submittal requirements:

[ ] Section 1. Executive Summary
[ ] Section 2. Description of Relevant Experience and Team Organizational Chart
[ ] Section 3. Project References
[ ] Section 4. Local Workforce Plan
[ ] Section 5. Proof of Valid Licensing
[ ] Section 6. Preliminary System Designs
[ ] Section 7. Example PV Production Modeling Outputs
[ ] Section 8. Pricing Proposal and Production Forms (Attachment D)
[ ] Section 9. Alternative Financing Proposals (optional)
[ ] Section 10. Financial Analyses of Project Savings
[ ] Section 11. Proposed Construction Schedule
[ ] Section 12. Alternative Energy Solutions (optional)
[ ] Section 13. Auxiliary Program Benefits (optional)
[ ] Section 14. Template PPA Document
[ ] Section 15. Signed Reimbursement Acknowledgement Form and Comments on Key Contract Terms (Attachment E)
[ ] Section 16. Signed Response Checklist (Attachment G)
[ ] Section 17. Financial and Other Supporting Documents

Confirmed receipt of Addenda (as applicable):

[ ] Addendum 1
[ ] Addendum 2
[ ] Addendum 3
[ ] Addendum 4

Developer (primary respondent) must sign declaration below, in addition to specific declarations as required, that the information provided in this response is true and correct.

I, _____, authorized agent of the bidder,

_____ (proposer), hereby declare, under penalty of perjury under the laws of the State of California, that the information provided in the response to: Request For Proposals for Solar PV Projects: Sustainable Energy and Economic Development Fund, Issued by the City of South Lake Tahoe is true and correct.

Signed: _____ Dated: _____

01: Old City Airport

Address: 15786 Airport Road, Nevada City, CA, 95959
Utility Provider & Tariff: PG&E, no existing electrical service
Annual Electricity Usage: N/A
Avg. Monthly Demand Peak: N/A

Table 1: Old City Airport Solar PV Potential

Maximum		Recommended	
System Size:	5.43 MW-DC; 4.50 MW-AC	**System Size:**	**4.39 MW-DC; 3.84 MW-AC**
Expected Output:	9,015,042 kWh/year	**Expected Output:**	**7,288,404 kWh/year**
Electricity Offset:	N/A	**Electricity Offset:**	**N/A**
Carbon Displacement:	5,926 metric tons/year	**Carbon Displacement:**	**4,791 metric tons/year**

Challenges: New construction on vacant land may require environmental review; No existing electrical service on-site; Power purchase arrangement unclear

Opportunities: High-visibility solar array; Help meet community renewable energy and GHG emission reductions targets; Utility/CCA program potential; Possible site for back-up battery storage for regional resilience and reliability

The City of Nevada City has adopted an ambitious goal of achieving 100% of community electricity consumption from renewable energy sources by the year 2030. With community-wide energy consumption of 25-35 million kWh annually, this proposed solar system could provide the equivalent of 20-30% of the community's electrical use.

In selecting a solar developer partner, the City desires a collaborator who will consider the community objectives found on the following page.

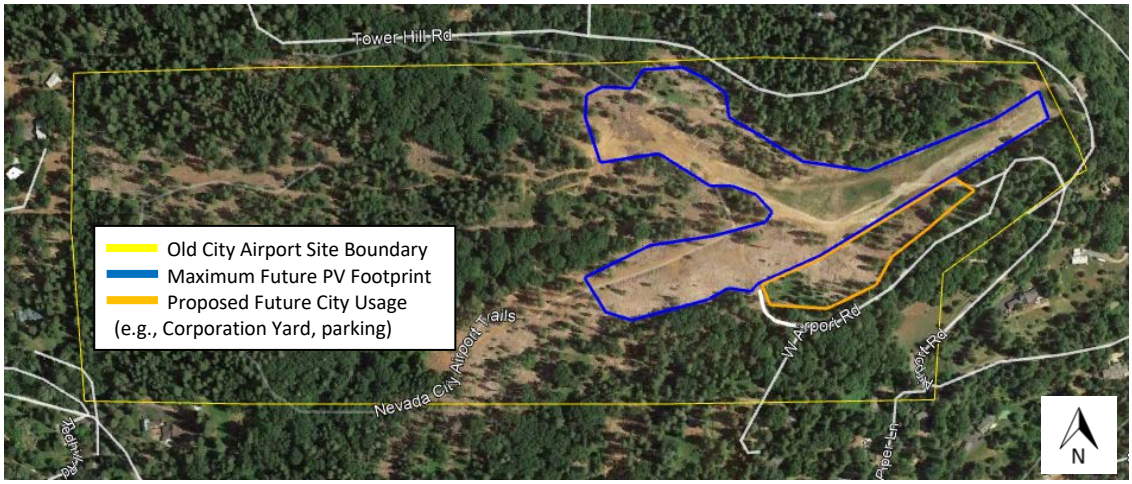

Figure 1. Old City Airport site boundary and proposed PV and City footprints

Community objectives for proposed solar development of the Old City Airport site:

1. The City is in the process of developing a Master Plan for the entire 100+ acre Old Airport site, and the solar developer will be required to participate in the planning process.

2. The City is asking that the developer consider a small portion of the project to be developed as solar canopies over to-be-built vehicle parking for up to 20 vehicles, which will be used to support other proposed site uses identified in the Master Plan. (Future parking to be built by the City in the orange-outlined area in Figure 1.)

3. The City is asking the solar developer to design and install a system of screening for the project that provides security and is aesthetically consistent with the forested location. It is preferred that native vegetation or other natural screening material be integrated with the security fencing.

4. The City is asking the solar developer to consider a present or future battery storage component in the response to the RFP.

5. The City asks that the solar developer consider the inclusion of electrical facilities that will power symbiotic uses within the proposed Master Plan (i.e., lighting for a small meeting facility, trails, carport parking, etc.). The City is considering a future Corporation Yard in the location shown in Figure 1. It is possible that the proposed use will require PG&E to install additional distribution capacity to the site.

6. The City has identified a preferred point of access that adjoins the proposed parking area (see white line joining W. Airport Rd to solar and City areas in Figure 1) and asks that the solar developer incorporate this access point into the proposed solar design.

7. The City is aware that the site was used previously as a local airport many decades ago, but does not believe that extensive environmental mitigation requirements will be necessary. The site is mostly cleared and does not appear to provide habitat for endangered species. Once project proposals are received, Council will evaluate proposals to determine the scope of the project and will direct staff to review the solar farm development proposal pursuant to the California Environmental Quality Act (CEQA) either as a stand-alone project or in conjunction with a draft Master Plan.

8. The City is aware of the challenges in identifying a power purchaser for the output from the proposed solar facility. The City intends to purchase a portion of the generation for its municipal uses. There is a desire to provide the power to the local citizenry in some form of community-based power purchase agreement. It is possible this site might be included in a future regional load-serving entity (LSE) renewable energy program or microgrid.

9. The City is aware that some trees surrounding the site must be removed to accommodate a solar facility of maximum size and efficiency. Certain trees are of significant aesthetic or cultural value, and the City asks the developer to collaborate on a site review to identify trees that should be saved, if possible, during the development process.

10. The City requests an emergency egress road be considered from the northerly boundary of the site, along the westerly edge of the solar facility, to the proposed carport parking area.

11. The City is keenly interested in the integration of any advanced environmental uses or technologies, including dual-use horticulture/agriculture, water collection facilities, etc.

12. The City is willing to participate in securing any available grant funding to offset the costs of developing the facility.

Figure 2. Proposed Solar PV Design Footprint

The proposed solar footprint in Figure 2 above shows viable areas for project development highlighted in dark blue. The orange shaded area to the south of the solar arrays is a 2-3 acre set-aside for a future City Corporation Yard and parking for community use of the open space west of the solar facility. The solar layout, as shown, can accommodate approximately 5,330 kW on fixed-tilt ground-mount arrays and up to 100 kW of solar carport over proposed new parking, for a total proposed solar capacity of 5,430 kW-DC (5.43 MW). The energy yield for the proposed solar arrays is approximately 1,660 kWh/kW-DC per year, giving over 9 million kWh of electrical production annually.

Site Overview

As noted, the Old City Airport site is a former airport, encompassing over 100 acres, that has lain unutilized for over forty years. The City owns the land and is currently working on a site Master Plan for full utilization, with solar, a Corporation Yard, activity areas, and open natural space with native trees. Any solar development within this site must be done in close collaboration with the City and the City's Master Plan consultant. In coordination with the draft Master Plan, the southern portion of the site has been left open for a future City Corporation Yard, which would likely serve as the primary point of electrical interconnection for a future solar facility. The City also desires a solar carport over a new planned parking lot in the proposed Corporation Yard area.

Figure 3. Current access road; photo location #2 looking south

Access to the site is planned at the south side of the solar footprint, with such access shared with the planned Corporation Yard. Current access is available through a curvy single-lane dirt road (approximately 15 feet wide; see Figure 3 above, referencing photo

location #2 in Figure 2), so access improvements, if necessary, will need to be included in solar development costs.

For solar construction, the facility must be surrounded by a visual screen that integrates aesthetically with the surrounding natural forest setting. If solar development can incorporate a "dual-use", such as horticulture or sheep grazing ability around the ground-mount arrays, the City would like to consider such options. As noted, no environmental mitigation is anticipated, but the City will take Council direction on environmental review of the proposed site layout and use, either in conjunction with the full site Master Plan or as a stand-alone project. Native trees, particularly madrone and oak trees, should be left untouched to the maximum extent possible, though the City understands that some tree clearing will be unavoidable. Tree shading is a consideration and must be addressed, either with strategic removal or planned solar production losses. See Figure 4 below for an example of tree cover along the northern and southern edges of the eastern half of the proposed solar area, referencing a photo location marked in Figure 2.

Figure 4. Photo location #1, looking northeast

Electrically, an obstacle to solar construction is the lack of existing utility service. A single-phase utility line does pass overhead to the east of the site (see blue pin in Figure 5 below), but the closest three-phase power is approximately 200 yards to the southeast. Preliminary PG&E maps indicate a limitation of 1.6 MW of interconnection capacity at that location, but up to 3.8 MW of capacity farther down the feeder (in the downtown area). Additionally, over 7 MW of available capacity may be available directly south of downtown, on the south side of CA Route 20. As the City develops the Corporation Yard and/or other facilities on the site, utility three-phase electrical service may become available, and solar development should again coordinate closely with the City and its consultant on such electrical planning.

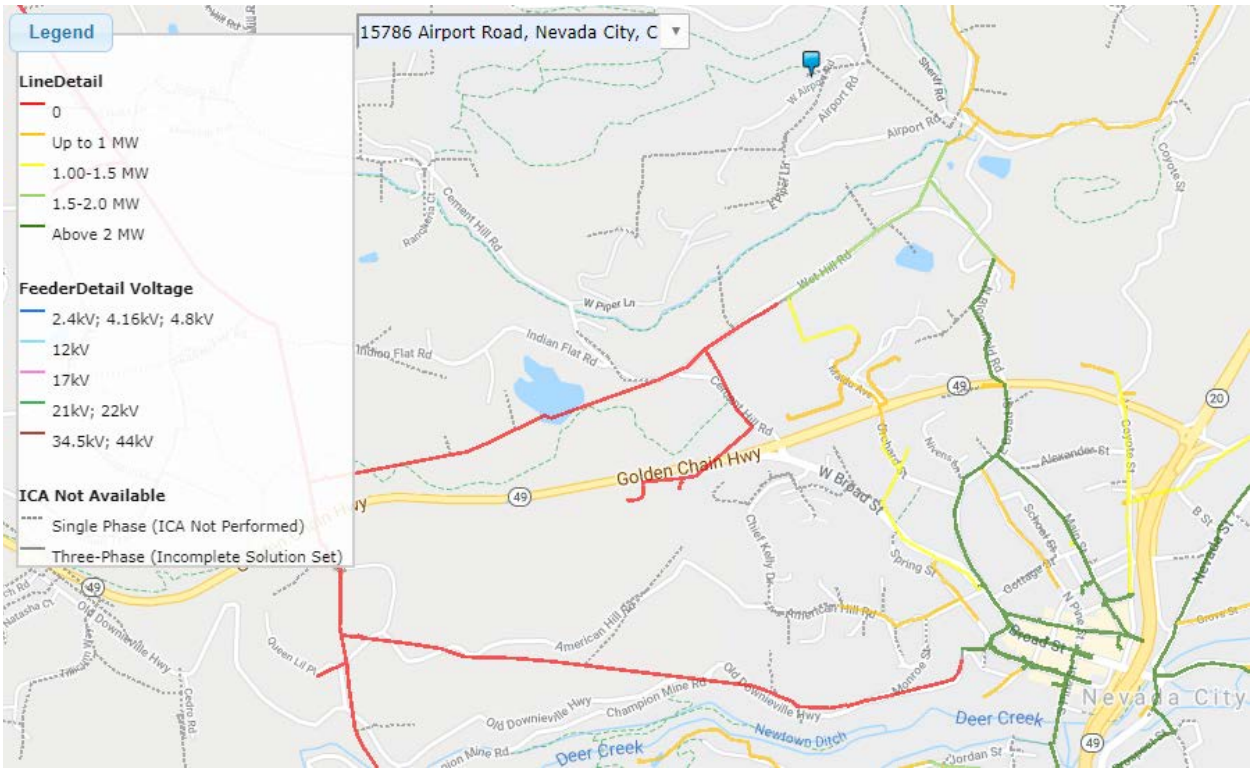

Figure 5. PG&E Integration Capacity Analysis (ICA) map for Old Airport area

This site would also benefit from battery storage to support utility operations and City resiliency and reliability in the face of fire-related outages and proactive Public Safety Power Shut-downs (PSPS). Solar proposals should provide a battery storage alternative for City consideration at this site. At minimum, solar installation must include provisions for future addition of battery storage to the solar system.

The most pressing challenge to development at the site is the lack of an identified energy sale/purchase program for the solar energy, with the City and local residents as off-takers. PG&E's Enhanced Community Renewables program could possibly be utilized, but that program has had limited success and the price point for solar development may be unsuitable for the proposed solar system size. The City anticipates that a new Community Solar program, developed in conjunction with a yet-to-be-determined partner (such as a local CCA or municipal utility), would be the most likely mechanism for enabling local purchasing of electricity generated at the site. The selected solar developer of this site would need to work closely with the City and electrical LSE to determine program design, including output tracking and payment parameters.

NEVADA CITY

100% RENEWABLES COMMITTEE

PRESENTATION MATERIALS

JANUARY 8, 2020

The Nevada City 100% Renewables is concerned that the conceptual design provided by the City consultant will produce a limited solar facility that will not be economical. On the other hand, we feel that the site map provide by the SEED group will allow a solar facility that maximizes the site potential with an economy of scale to attract bidders and offset the electricity usage of between 500-1,000 homes, most of which will not be able to install rooftop solar.

Background:
In 2015 Nevada City approved an Energy Action Plan that recommended strategies that would reduce electricity consumption-related Greenhouse gas emissions by 28% by 2020. Two-thirds of this savings was projected to be from converting to renewable energy use. Since then the City approved a resolution for the City to reach 100% renewable electricity by 2030.

Our committee has determined that, given that the strategies, goals and tasks of the Energy Action Plan are voluntary and non-enforceable on the residents and businesses that use 95% of the electricity, there are two realistic paths toward meeting the goals.

The first is to comply with State of California mandatory regulations such as zero-net energy for new residential buildings starting in 2020. Unfortunately this does nothing about current building electricity use. New regulations that are being proposed for roof-top solar called net metering 3.0 will reduce the cost savings potential for new solar installations. This will make it difficult for individuals to help the city meet its goals.

The second path is for the City to take advantage of the Old City Airport site to create a solar facility that would offset much of the GHG emissions of the municipality, residential and non-residential buildings. Our committee has worked with the Sierra Business Council and two other organizations to provide the City with a site proposal that will be used to create an RFP to go out to multiple solar vendors by January 31.

The output of the facility could either be used in a community solar buy-in arrangement, or offered to an existing Community Choice Aggregation (CCA) such as Pioneer Energy in Placer County, or to feed a new Community Choice Aggregation such as proposed by NID. This will be determined by the chosen proposal from the bidding process for the facility.

Whether the output is used directly within the city or used outside the city is not important from a renewable energy standpoint. It will still count towards meeting the goals of the Energy Action Plan and the 100% resolution.

The City has made a noteworthy and respectable commitment to sourcing all of its electricity from renewable energy facilities. By utilizing the optimum space for a local community solar facility, the City can truly live up to its ambitions.

NEVADA CITY'S SOLAR OBJECTIVES FOR INCLUSION IN RFP – September 20, 2019

1. The City is in the process of developing a 100+ acre Master Plan for the entire Old Airport site, and the solar developer will be asked to participate in the planning process.

2. The City is asking that the developer consider a small portion of the project be developed as solar canopies over to-be-built vehicle parking, which will be used to support other proposed uses identified in the Master Plan. (See proposed location on map attached.)

3. The City is asking the solar developer to design and install a system of screening for the project that provides security and is aesthetically consistent with the forested location.

4. The City is asking the solar developer to accommodate a present or future battery storage component in the response to RFP.

5. The City asks that the solar developer consider the inclusion of electrical facilities that will power symbiotic uses within the proposed Master Plan.

6. The City has identified a preferred point of access that adjoins the proposed parking area, and is on City-owned property; and asks that the solar developer incorporate this access point into their design. (See proposed location on map attached.)

7. The City is aware that the site was used previously as a local airport many decades ago, but does not believe that extensive environmental mitigation requirements will be necessary. The site is mostly cleared, and does not appear to provide habitat for endangered species. The City plans to conduct environmental review of the entire Master Plan area, including the solar farm component. The appropriate level of review will be determined at that time, and may not necessarily rise to the level of an EIR.

8. The City is aware of the challenges in identifying a power purchaser for the output from the proposed solar facility. The City intends to purchase a portion of the generation for its municipal uses. The City is in engaged in conversations with various entities relating to the inclusion of the airport solar facility in a CCA. There is a desire to provide the power to the local citizenry in some form of community-based power purchase agreement, if that is possible.

9. The City is aware that some trees surrounding the site must be removed to accommodate a solar facility of maximum size and efficiency. Certain of the trees are of significant aesthetic or cultural value, and the City asks the developer to collaborate on a site review to identify trees that should be saved, if possible, during the development process.

10. If feasible, the City would like the solar developer to consider dual-use(s) for the solar farm, such as agriculture, horticulture, etc, beneath, or between the solar arrays.

w/ Corp Yard [SEED30617] Nevada City - Airport Parcels, 15786 Airport Road, Nevada City, CA, 95959

Report

Project Name	[SEED30617] Nevada City - Airport Parcels
Project Address	15786 Airport Road, Nevada City, CA, 95959
Prepared By	Optony Inc. jonathan.whelan@optonyusa.com

System Metrics

Design	w/ Corp Yard
Module DC Nameplate	4.39 MW
Inverter AC Nameplate	3.75 MW Load Ratio: 1.17
Annual Production	7.288 GWh
Performance Ratio	81.9%
kWh/kWp	1,660.1
Weather Dataset	TMY, 10km grid (39.25,-121.05), NREL (prospector)
Simulator Version	54fdca6c88-3e336f7dcd-daa9dbfcd8-3bc3db9703

Project Location

Monthly Production

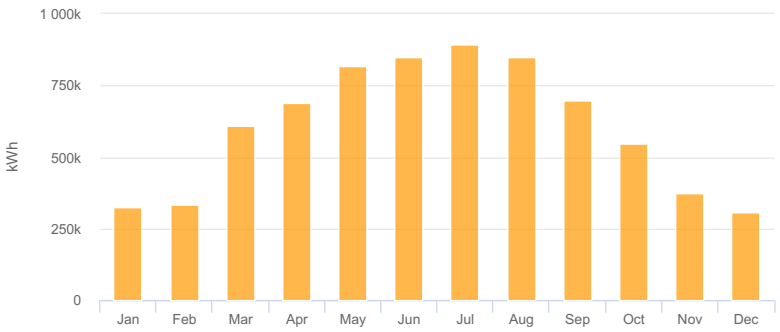

Sources of System Loss

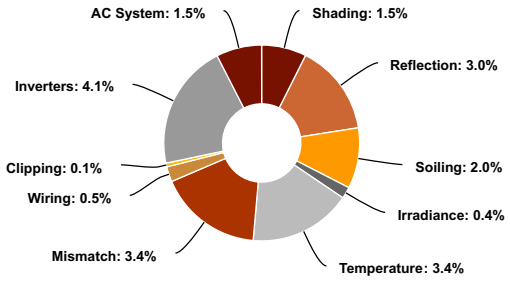

Annual Production

	Description	Output	% Delta
Irradiance (kWh/m²)	Annual Global Horizontal Irradiance	1,851.6	
	POA Irradiance	2,027.3	9.5%
	Shaded Irradiance	1,997.3	-1.5%
	Irradiance after Reflection	1,937.1	-3.0%
	Irradiance after Soiling	1,898.4	-2.0%
	Total Collector Irradiance	**1,898.4**	**0.0%**
Energy (kWh)	Nameplate	8,356,107.4	
	Output at Irradiance Levels	8,323,983.9	-0.4%
	Output at Cell Temperature Derate	8,042,910.4	-3.4%
	Output After Mismatch	7,767,664.4	-3.4%
	Optimal DC Output	7,728,947.2	-0.5%
	Constrained DC Output	7,719,232.0	-0.1%
	Inverter Output	7,399,394.5	-4.1%
	Energy to Grid	**7,288,403.5**	**-1.5%**
Temperature Metrics			
	Avg. Operating Ambient Temp	13.5 °C	
	Avg. Operating Cell Temp	23.5 °C	
Simulation Metrics			
	Operating Hours	4685	
	Solved Hours	4685	

Condition Set

Description	Condition Set 1
Weather Dataset	TMY, 10km grid (39.25,-121.05), NREL (prospector)
Solar Angle Location	Meteo Lat/Lng
Transposition Model	Perez Model
Temperature Model	Sandia Model

Temperature Model Parameters

Rack Type	a	b	Temperature Delta
Fixed Tilt	-3.56	-0.075	3°C
Flush Mount	-2.81	-0.0455	0°C

Soiling (%)

J	F	M	A	M	J	J	A	S	O	N	D
2	2	2	2	2	2	2	2	2	2	2	2

Irradiation Variance	5%
Cell Temperature Spread	4° C
Module Binning Range	-2.5% to 2.5%
AC System Derate	1.50%

Module Characterizations

Module	Uploaded By	Characterization
CS6U - 350P 1500V G4 (Canadian Solar Inc.)	Folsom Labs	CS6U-350P_MIX_CSIG4_EXT_V6_64_1500V_2017Q4.PAN, PAN

Component Characterizations

Device	Uploaded By	Characterization
Sunny Central SC 250 (SMA)	Folsom Labs	Default Characterization
Sunny Central SC 500HE-US (SMA)	Folsom Labs	Default Characterization

Components

Component	Name	Count
Inverters	Sunny Central SC 250 (SMA)	13 (3.25 MW)
Inverters	Sunny Central SC 500HE-US (SMA)	1 (500.0 kW)
Strings	10 AWG (Copper)	744 (315,505.9 ft)
Module	Canadian Solar Inc., CS6U - 350P 1500V G4 (350W)	12,544 (4.39 MW)

Wiring Zones

Description	Combiner Poles	String Size	Stringing Strategy
Wiring Zone	12	13-19	Along Racking
Wiring Zone 2	12	9-11	Along Racking

Field Segments

Description	Racking	Orientation	Tilt	Azimuth	Intrarow Spacing	Frame Size	Frames	Modules	Power
Field Segment 1	Fixed Tilt	Portrait (Vertical)	15°	180°	6.8 ft	2x1	1,849	3,698	1.29 MW
Field Segment 2	Fixed Tilt	Portrait (Vertical)	15°	152.195°	6.8 ft	2x1	776	1,552	543.2 kW
Field Segment 3	Fixed Tilt	Portrait (Vertical)	15°	212°	6.8 ft	2x1	3,464	6,928	2.42 MW
Field Segment 4	Carport	Portrait (Vertical)	10°	248.199°	0.0 ft	6x1	61	366	128.1 kW
Field Segment 5	Flush Mount	Portrait (Vertical)	0°	248.199°	0.0 ft	2x1	0	0	0

Detailed Layout

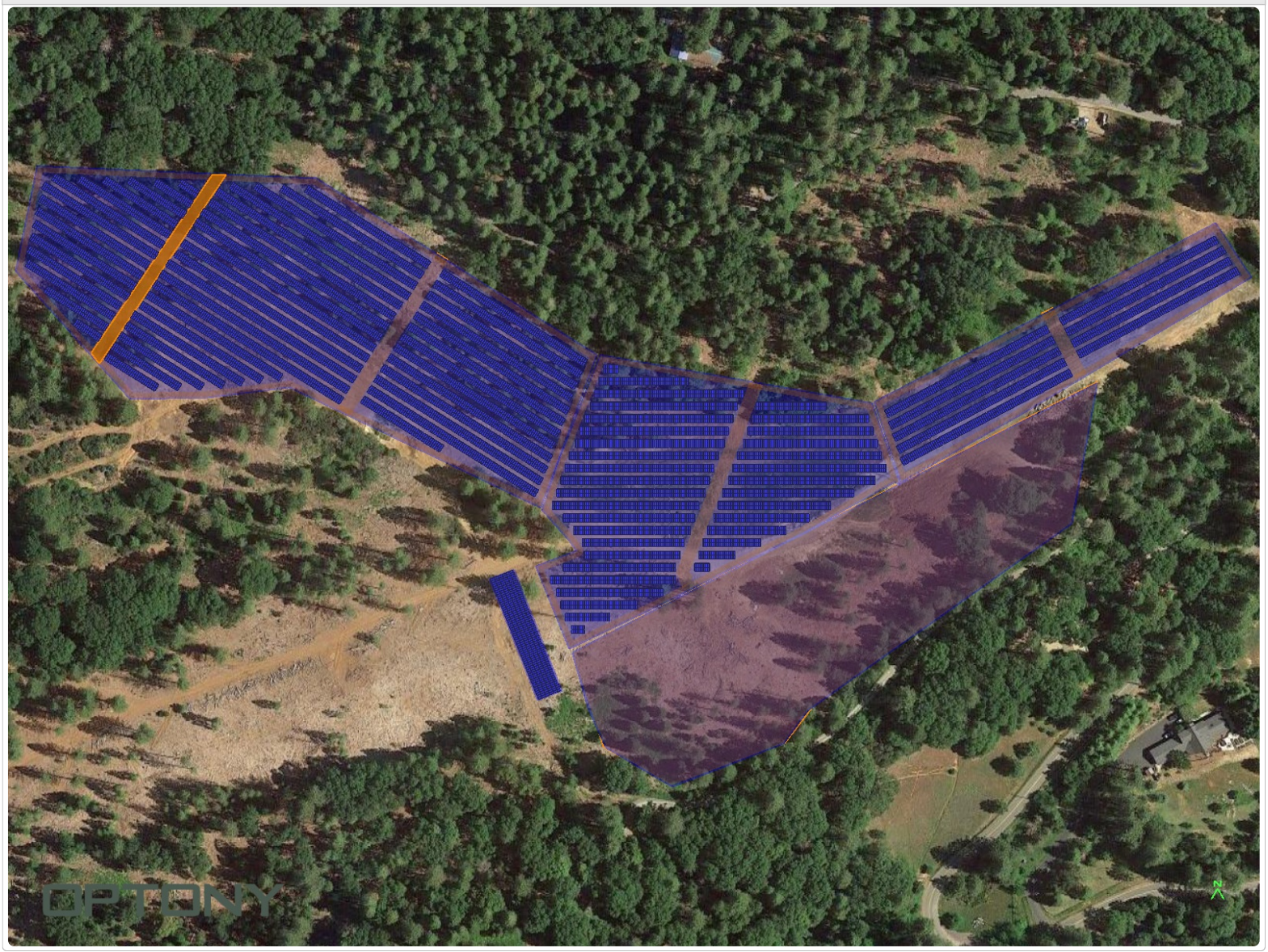

Airport Rd
Tower Hill Rd
Airport Rd
Sheriff Rd
W Airport Rd
Airport Rd
Airport Rd

BRUNSWICK 1103

1 of 1

Asset Info

Feeder Name	BRUNSWICK 1103
Feeder Number	152481103
Nominal Circuit Voltage (kv)	12kV
Circuit Capacity (MW)	12.25
Circuit Projected Peak Load (MW)	8.79
Substation Bank	1
Substation Bank Capacity (MW)	29.700001
Substation Bank Peak Load (MW)	21.200001
Existing Distributed Generation (MW)	1.51
Queued Distributed Generation (MW)	0.04
Total Distributed Generation (MW)	1.55
Total Customers	3243
Residential Customers	2487
Commercial Customers	618
Industrial Customers	133
Agricultural Customers	2
Other Customers	3

15786 Airport Road, Nevada City, C

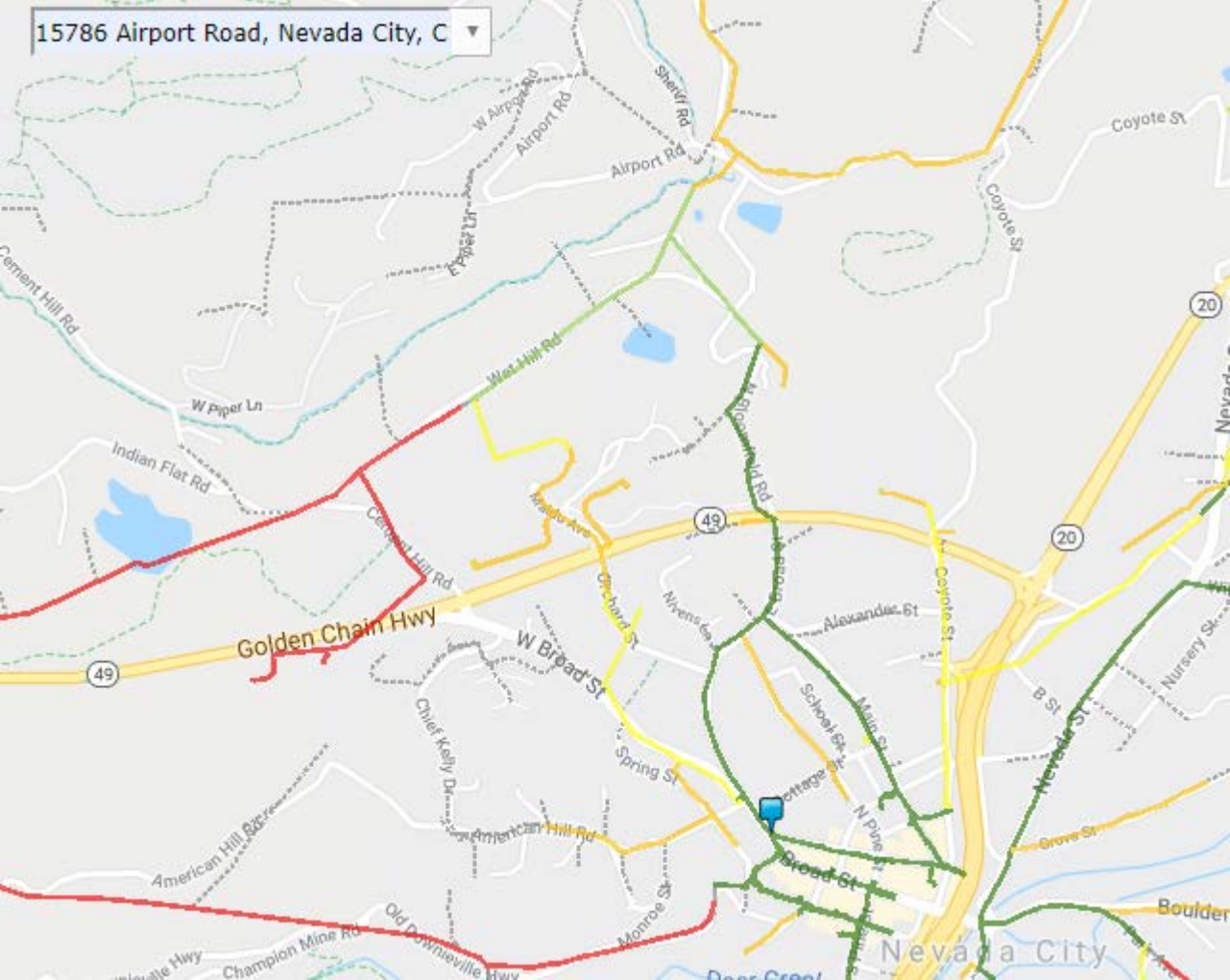

ement Hill
LineDetail
0
Up to 1 MW
1.00-1.5 MW
1.5-2.0 MW
Above 2 MW
ICA Not Available
Single Phase (ICA Not Performed)
Three-Phase (Incomplete Solution Set)
FeederDetail Voltage
2.4kV; 4.16kV; 4.8kV
12kV
17kV
21kV; 22kV
34.5kV; 44kV
49

Energy Research and Development Division

FINAL PROJECT REPORT

Borrego Springs: California's First Renewable Energy-Based Community Microgrid

California Energy Commission

Gavin Newsom, Governor

February 2019 | CEC-500-2019-013

PREPARED BY:

Primary Author(s):
Hilal Katmale
Sean Clark
Thomas Bialek
Laurence Abcede

San Diego Gas & Electric Company
8319 Century Park Court
San Diego, CA 92123
http://www.sdge.com

Contract Number: EPC-14-060

PREPARED FOR:
California Energy Commission

Jamie Patterson
Project Manager

Fernando Piña
Office Manager
ENERGY SYSTEMS RESEARCH OFFICE

Laurie ten Hope
Deputy Director
ENERGY RESEARCH AND DEVELOPMENT DIVISION

Drew Bohan
Executive Director

DISCLAIMER

This report was prepared as the result of work sponsored by the California Energy Commission. It does not necessarily represent the views of the Energy Commission, its employees or the State of California. The Energy Commission, the State of California, its employees, contractors and subcontractors make no warranty, express or implied, and assume no legal liability for the information in this report; nor does any party represent that the uses of this information will not infringe upon privately owned rights. This report has not been approved or disapproved by the California Energy Commission nor has the California Energy Commission passed upon the accuracy or adequacy of the information in this report.

ACKNOWLEDGEMENTS

This Electric Program Investment Charge project was conducted with support of the following project team members and key vendors.

- California Energy Commission
- San Diego Gas & Electric Company
- Community of Borrego Springs
- Spirae
- National Renewable Energy Laboratory
- NRG Solar
- SMA
- SunPower
- SAFT
- ABB
- Parker Hannifin
- CAT/Hawthorne
- eiPi10
- Microgrid Energy Solutions

PREFACE

The California Energy Commission's Energy Research and Development Division supports energy research and development programs to spur innovation in energy efficiency, renewable energy and advanced clean generation, energy-related environmental protection, energy transmission and distribution and transportation.

In 2012, the Electric Program Investment Charge (EPIC) was established by the California Public Utilities Commission to fund public investments in research to create and advance new energy solution, foster regional innovation and bring ideas from the lab to the marketplace. The Energy Commission and the state's three largest investor-owned utilities – Pacific Gas & Electric Company, San Diego Gas & Electric Company and Southern California Edison Company – were selected to administer the EPIC funds and advance novel technologies, tools, and strategies that provide benefits to their electric ratepayers.

The Energy Commission is committed to ensuring public participation in its research and development programs that promote greater reliability, lower costs, and increase safety for the California electric ratepayer and include:

- Providing societal benefits.
- Reducing greenhouse gas emission in the electricity sector at the lowest possible cost.
- Supporting California's loading order to meet energy needs first with energy efficiency and flexible load, next with renewable energy (distributed generation and utility scale), and finally with clean, conventional electricity supply.
- Supporting low-emission vehicles and transportation.
- Providing economic development.
- Using ratepayer funds efficiently.

Borrego Springs: California's First Renewable Energy Based Community Microgrid is the final report for the Borrego Springs: A Future Photovoltaic Based Microgrid project EPC-14-060 conducted by San Diego Gas & Electric Company. The information from this project contributes to the Energy Research and Development Division's EPIC Program.

For more information about the Energy Research and Development Division, please visit the Energy Commission's website at www.energy.ca.gov/research/ or contact the Energy Commission at 916-327-1551.

ABSTRACT

The mission of the Borrego Springs Microgrid project was to build a primarily renewable energy based microgrid that could independently provide power to an entire substation and the approximately 2,500 residential and 300 commercial and industrial customers it serves in the community. Borrego Springs has a history of numerous outages because of severe environmental conditions and is located at the end of a single transmission line. The microgrid project provides a direct and significant benefit to a real-world community and has a positive effect on the environment because it increases the community's energy resilience while reducing its carbon footprint by using renewable energy resources. The microgrid consists of San Diego Gas & Electric Company's 69 kilovolt to 12 kilovolt air-insulated substation; a 26 megawatt photovoltaic system located in the community; approximately 3 megawatts of customer-owned rooftop photovoltaic systems, two 1.8 megawatt distributed generation resources; two substation batteries; and three community energy storage batteries to provide electricity to the entire community during the day and, when necessary, dropping to critical loads at night.

During the project period, San Diego Gas & Electric Company and project team members upgraded the existing microgrid facility and developed an advanced microgrid controller, enabling successful and reliable islanding of the entire Borrego Springs community and its customers. San Diego Gas & Electric Company controlled the microgrid both locally (in Borrego Springs) and from its Distribution Control Center more than 80 miles away. Besides the immediate benefit to the Borrego Springs community of having non-interrupted energy resources, this project has significantly increased the microgrid knowledge base, particularly regarding advanced microgrid controllers and implementing non-utility owned resources.

Keywords: advanced microgrid controller, renewable energy, Borrego Springs microgrid, island testing, third-party solar integration

Please use the following citation for this report:

Author(s) Katmale, Hilal; Clark, Sean; Abcede, Laurence; Bialek, Thomas, 2018. *Borrego Springs: California's First Renewable Energy Based Community Microgrid*. California Energy Commission. Publication Number: CEC-500-2019-013.

TABLE OF CONTENTS

Page

ACKNOWLEDGEMENTS ..... **i**

PREFACE ..... **iii**

ABSTRACT ..... **iv**

TABLE OF CONTENTS ..... **v**

LIST OF FIGURES ..... **vii**

LIST OF TABLES ..... **xii**

EXECUTIVE SUMMARY **1**

Introduction 1

Project Purpose 2

Project Process 3

Project Results 3

Benefits to California 5

CHAPTER 1: Introduction **7**

Problem Statement 7

Project Goals and Objectives 8

Goals 8

Objectives 9

CHAPTER 2: Project Approach **10**

Task List 10

Project Team 12

CHAPTER 3: Key Developments **15**

Project Performance Site 15

Microgrid Circuit Analysis and Baselining 15

Borrego Substation and Circuits 15

Existing Devices 17

Microgrid Control Systems Baseline 23

Baseline Load – Parametric Analysis 25

Microgrid Design and Operational Requirements 32

Overall Architecture 32
Operational Requirements 33
Advanced Microgrid Controller Development 42
Microgrid Infrastructure Upgrades 44
Circuit Reconfiguration 44
Upgrade Protection and Permissions 46
Upgrade/Harden Circuits Harden Critical Stretch of Circuit 2 47
Integration with Third-party Solar Facility 47
Integration with Local Resorts 48
Upgrades to Site Communications and Demonstration Support 48
Integration with Electric Distribution Operations 48
Community Participation 49
Community Events Outreach 52
Laboratory Testing 55
Evaluation of an Advanced Microgrid Controller 55
Hardware-In-Loop Test Setup for Advanced Microgrid Controller Evaluation 59
Input Data for Advanced Microgrid Controller Evaluation 66
Collecting Data for Microgrid Controller Evaluation 69
Achieving Safe, Stable, and Accurate Simulations 70
Evaluation of Advanced Research and Development Microgrid Control Functions 71
Operational Testing and Demonstrations 73
Operational Testing with Load Bank 73
Island Testing 73
CHAPTER 4: Island Testing and Demonstrations 76
Island 1 Test 76
Objective 76
Method 76
Observations 76
Island 2 Test 81
Objective 81
Method 81
Observations 83

Island 3 Test 85
Objective 85
Method 85
Observations 87
CHAPTER 5: Lessons Learned and Recommendations 89
Lessons Learned 89
CHAPTER 6: Public Benefits to California 92
CHAPTER 7: Technology / Knowledge Transfer Activities 93
LIST OF ACRONYMS 95
REFERENCES 97
APPENDIX A: Results of Advanced Microgrid Controller Evaluation in the Laboratory A-1
APPENDIX B: Metrics for Microgrid Controller Evaluation B-1
APPENDIX C: Results of Advanced Research and Development Control Functions Evaluation C-1
APPENDIX D: Technology / Knowledge Transfer Activities D-1

LIST OF FIGURES

Page

Figure 1: Borrego Springs Microgrid Project Team 12
Figure 2: San Diego County 15
Figure 3: Borrego Springs Aerial View 16
Figure 4: Borrego Substation - Looking South 16
Figure 5: Borrego Substation – Looking North 17
Figure 6: Circuit 1 of Borrego Substation 18
Figure 7: Circuit 2 of Borrego Substation 19
Figure 8: Circuit 3 of Borrego Substation 20
Figure 9: Five-Way Underground Switch 21
Figure 10: Substation Capacitor at Borrego Substation 22

Figure 11: Borrego Substation Microwave Communication 23
Figure 12: Microgrid Visualizer – Manual Mode Screen 24
Figure 13: Microgrid Baseline Controls 25
Figure 14: Microgrid Circuits - Historical Monthly Peak Demand (MW) 26
Figure 15: Microgrid Circuits Daily Load Profiles for the Month of February 2015 27
Figure 16: Microgrid Circuits Daily Load Profiles for the Month of August 2015 28
Figure 17: Microgrid Circuit Daily Load Profiles of Winter Critical Day Types - February 2015 .. 28
Figure 18: Microgrid Circuits Daily Load Profiles for the Month of August 2015 29
Figure 19: Histogram of Outage Durations 31
Figure 20: Borrego Springs Microgrid Architecture Overview 33
Figure 21: Advanced Microgrid Controller Interface with Third-party Solar System 40
Figure 22: Third-party Solar System – Constant Output Mode Operation 41
Figure 23: Third-party Solar System – Peak Shave Mode Operation 41
Figure 24: Data and Controls Path Between Advanced Microgrid Controller and Third-party Solar Facility 42
Figure 25: Reconfiguration of Circuit 1 - Loop into Microgrid Yard 45
Figure 26: Reconfiguration of Circuit 1 - SCADA Switches 45
Figure 27: Upgraded Protection and Permissions 46
Figure 28: Upgrade/Harden Circuits - Harden Critical Stretch of Circuit 2 47
Figure 29: San Diego County Sheriff's Department 49
Figure 30: Borrego Springs Fire District 50
Figure 31: Borrego Springs ESIF local CHIL setup 62
Figure 32: Borrego Springs ESIF local CHIL/PHIL setup 63
Figure 33: Borrego Springs ESIF/ITF Remote Setup 64
Figure 34: Connection of AMC to the RTDS through a data manager 66
Figure 35: Load and Solar Insolation Profiles for Heavy Load on July 29, 2014 67
Figure 36: Load and Solar Insolation Profiles for Light Load on January 24, 2014 68
Figure 37: Load and Solar Insolation Profiles for Evaluating Enhanced Resiliency on June 30, 2014 69
Figure 38: Borrego Springs Test Setup for Evaluation of Advanced R&D Control Functions 72

Figure 39: Microgrid Circuits at Borrego 74

Figure 40: Island 1 Test Demonstration 77

Figure 41: Island 1 Test on February 28, 2018 80

Figure 42: Frequency and Voltage Observation During Island 1 Test #1 80

Figure 43: Island 2 Test Demonstration 81

Figure 44: Island 2 Test on May 15, 2018 83

Figure 45: Frequency Observation at Circuit 1 Breaker During Island Test #2 84

Figure 46: Frequency and Voltage Observation During Island Test #2 84

Figure 47: Island 3 Test Demonstration 85

Figure 49: 69 kV and 12 kV Voltage During Island 3 Test on May 17, 2016 88

Figure 50: Frequency, Voltage and Circuit Load Observation during Island Test #3 on March 7, 2018 88

Figure A-1: Borrego Springs ESIF local CHIL/PHIL setup A-1

Figure A-2: Line Plot of Net Power Flow for Each Individual Circuit Within the Microgrid for Test A1.1 ..... A-3

Figure A-3: Line Plot of Generation and PCC Power Flow Within the Microgrid for Test A1.1 ..... A-4

Figure A-4: PCC Voltage and Current for Test A1.1 ..... A-4

Figure A-5: Line Plot of Net Power Flow for Each Individual Circuit Within the Microgrid for Test A1.2 ..... A-5

Figure A-6: Line Plot of Generation and PCC Power Flow Within the Microgrid for Test A1.2 ..... A-6

Figure A-7: PCC Voltage and Current for Test A1.2 ..... A-6

Figure A-8: Line Plot of Net Power Flow for Each Individual Circuit Within the Microgrid for Test A2.1 ..... A-8

Figure A-9: Line Plot of Generation and PCC Power Flow Within the Microgrid for Test Case A2.1 ..... A-9

Figure A-10: PCC Voltage and Current for Test A2.1 ..... A-10

Figure A-11: Survivability Metric Results for Test A2.1 ..... A-11

Figure A-12: Cost Results by Type for Test A1.1 (baseline) on the left and Test A2.1 (with dispatch) on the right. A-12

Figure A-13: Total and Cumulative Cost Results for Test A1.1 (baseline) on the left and Test A2.1 (with dispatch) on the right A-12

Figure A-14: Line Plot of Net Power Flow for each Individual Circuit within the Microgrid for Test Case A2.2 ..... A-13

Figure A-15: Line Plots of Generation and PCC Power Flow for Test A2.2 ..... A-14

Figure A-16: PCC Voltage and Current for Test Case A2.2 ..... A-15

Figure A-17: Survivability Metric Results for Test A2.2 ..... A-16

Figure A-18: Cost Results by Type for Test A1.2 (baseline, left) and Test A2.2 (with dispatch, right) A-16

Figure A-19: Total and cumulative cost results for Test A1.2 (baseline) on the left and Test A2.2 (with dispatch) on the right A-17

Figure A-20: Planned Disconnection Results for Test B1.1 ..... A-19

Figure A-21: Voltage Amplitude and Frequency during Planned Disconnection (Test B1.1) A-20

Figure A-22: Planned Disconnection Results for Test B1.2 ..... A-21

Figure A-23: Voltage Magnitude and Frequency during Planned Disconnection (Test B1.2) A-22

Figure A-24: Unplanned Disconnection Results for Test B2.1.1 23

Figure A-25: Voltage Magnitude and Frequency during Unplanned Disconnection (Test B2.1.1) A-24

Figure A-26: Unplanned Disconnection Results for Test B2.1.2 ..... A-25

Figure A-27: Voltage Magnitude and Frequency during Unplanned Disconnection (Test B2.1.2) A-26

Figure A-28: Unplanned Disconnection Results for Test B2.2.1 ..... A-27

Figure A-29: Voltage Magnitude and Frequency during Unplanned Disconnection (Test B2.2.1) A-28

Figure A-30: Unplanned Disconnection Results for Test B2.2.2 ..... A-29

Figure A-31: Voltage Magnitude and Frequency during Unplanned Disconnection (Test B2.2.2) A-30

Figure A-32: Unplanned Disconnection Results for Test B2.2.3 ..... A-31

Figure A-33: Voltage Magnitude and Frequency during Unplanned Disconnection (Test B2.2.3) A-32

Figure A-34: Borrego Springs ESIF Local CHIL Setup A-33

Figure A-35: Unplanned Disconnection Results for Test B3.1 with Generator Controller Hardware A-34

Figure A-36: Microgrid Voltage and Frequency at PCC for Test B3.1 with Generator Controller Hardware A-35

Figure A-37: Unplanned Disconnection Results for Test B3.1 ..... A-36

Figure A-38: Microgrid Voltage and Frequency at PCC for Test B3.1 ..... A-37

Figure A-39: Unplanned Disconnection Results for Test B3.2 ..... A-38

Figure A-40: Microgrid Voltage and Frequency at PCC for Test B3.2 ..... A-39

Figure A-41: Load and Solar Insolation Profiles for Heavy Load on July 29, 2014 ..... A-40

Figure A-42: Load and Solar Insolation Profiles for Light Load on January 24, 2014 ..... A-41

Figure A-43: Plots of Net Load Power Profiles for Test C2.1 ..... A-42

Figure A-44: Line Plot of Net Power Flow for each Individual Circuit within the Microgrid for Test C2.1 ..... A-42

Figure A-45: Line plot of generation within the microgrid for Test C2.1 ..... A-43

Figure A-46: Voltage Amplitude and Frequency Results for Test C2.1 ..... A-44

Figure A-47: Total and cumulative cost results for Test C2.1 ..... A-45

Figure A-48: Plots of Net Load Power Profiles for Test C2.2 ..... A-46

Figure A-49: Line Plot of Net Power Flow for each Individual Circuit within the Microgrid for Test C2.2 ..... A-46

Figure A-50: Line Plot of Generation within the Microgrid for Test C2.2 ..... A-47

Figure A-51: Voltage Amplitude and Frequency Results for Test C2.2 ..... A-48

Figure A-52: Cost by Asset Type Results for Test C2.2 ..... A-49

Figure A-53: Total and Cumulative Cost Results for Test C2.2 ..... A-49

Figure A-54: Load and Solar Insolation Profiles for Evaluating Enhanced Resiliency on June 30, 2014 ..... A-50

Figure A-55: Simulation Results for Test Case D1.1 (reconnection) during a Few Cycles A-52

Figure A-56: Simulation Results for Test D1.1 (reconnection) during a Longer Time Period ... A-53

Figure A-57: Voltage Phase Angle, RMS, and Frequency Difference between Grid and Microgrid Side A-54

Figure A-58: Simulation Results for Test D1.2 (reconnection) during a Few Cycles A-55

Figure A-59: Simulation Results for Test D1.2 (reconnection) during a Longer Period A-56

Figure A-60: Voltage Phase Angle, RMS, and Frequency Difference between Grid and Microgrid Voltage A-57

Figure C-1: Borrego Springs Test Setup for Evaluation of Advanced R&D Control Functions.....C-1
Figure C-2: Load and Target Power Flow across the PCC for Test ACT 1.1 .....C-2
Figure C-3: Power flow Across the PCC for Test ACT 1.1 .....C-3
Figure C-4: Load and Target Power Flow across PCC for Test ACT 1.2 .....C-4
Figure C-5: Power Flow across the PCC for Test ACT 1.2 .....C-5
Figure C-6: Load and Target Power Flow across the PCC for Test ACT 1.3 .....C-6
Figure C-7: Load and Target Power Flow across the PCC for Test ACT 1.3 .....C-7
Figure C-8: Load and Target Power Flow across the PCC for Test ACT 2.1 .....C-8
Figure C-9: Power Flow across the PCC for Test ACT 2.1 .....C-9
Figure C-10: Load and Target Power Flow across the PCC for Test ACT2.3 ..... C-10
Figure C-11: Power Flow across the PCC for Test ACT 2.3 ..... C-11
Figure C-12: Load, Solar Irradiance, and Target Power Flow across the PCC for Test ACT 2.4 C-12
Figure C-13: Power Flow across the PCC for Test ACT 2.4 ..... C-13

LIST OF TABLES

Page

Table 1: Borrego Springs Microgrid Project Schedule 14
Table 2: Legend for Symbols in Circuits 1, 2, and 3 21
Table 3: Microgrid Circuits - Historical Monthly Peak Demand (MW) 26
Table 4: Borrego Springs Annual Reliability Performance Metrics (Sustained Outages)..... 30
Table 5: Borrego Springs Annual Reliability Performance Metrics (Momentary Outages)..... 30
Table 6: System-Wide Annual Reliability Performance Metrics (Sustained Outages)..... 30
Table 7: System-Wide Annual Reliability Performance Metrics (Momentary Outages)..... 31
Table 8: Advanced Microgrid Controller Use Cases 34
Table 9: Microgrid Information Exchange 43
Table 10: Survey Results – Total Respondents – All 82 Survey Participants 53
Table 11: Total Respondents – 48 of 82 Survey Participants “who were aware of the microgrid” 54

Table 12: Total Respondents – 34 out of 82 Survey Participants "who were NOT aware of the microgrid" 54

Table 13: Voltage Thresholds Disconnection 56

Table 14: Frequency Thresholds for Disconnection 56

Table 15: Difference Limits for Reconnection 57

Table 16: Emission Factors in Carbon Dioxide Equivalent 58

Table 17: Mapping Scenarios to Functional Requirements 59

Table 18: Hardware-in-the-Loop Hardware Component Selections 65

Table 19: Measured Quantities 70

Table 20: Operational Procedures – Island Test 1 78

Table 21: Operational Procedures - Island Test 2 82

Table 22: Operational Procedures - Island Test 3 86

Table B-1: Emission Factors in Carbon Dioxide Equivalent (CEC 2014) B-2

Table D-1: Information Activities 2015-2018 ..... D-1

EXECUTIVE SUMMARY

Introduction

California's energy policies focus on promoting affordable energy supplies, improving energy reliability, and enhancing health, economic well-being, and environmental quality. Reliability in this context means delivering energy at the quantity and with the quality required by users. A closely related concept is energy resilience, which refers to the ability of the energy system to recover from crisis events such as hurricanes, floods, and other weather-related situations. Microgrids are an important tool to help increase the reliability and resilience of California's electricity system. A microgrid is an independent electric grid with onsite energy generation or storage or both that can operate while connected to or when islanded (disconnected) from the larger utility grid. When in island mode, the electrical power generation in the microgrid must exactly match the electrical loads within the microgrid.

Microgrids are not a new concept. Several modern microgrids have been used in California during the past decade, typically using a variety of fossil fuel-based power generation or energy storage or both. These microgrids, however, have operated at a small scale and do not apply to real-world fluctuations in customers' energy consumption. More importantly, there has been limited success in demonstrating the ability of a microgrid to comply with California's mandated renewable energy policies and goals, or to manage large amounts of renewable energy (up to 100 percent) to meet facility or community electricity needs while avoiding adverse impacts to the electric grid from the unpredictability of renewable resources. Most of these also microgrids lack a sophisticated microgrid controller or energy management system that could automatically enhance the performance of systems that use more than one renewable energy resource.

Microgrid technology that uses renewable energy resources, such as solar photovoltaic (PV), and energy storage technologies, such as batteries, can improve resiliency and reliable energy distribution for communities with energy volatility. Until now, the ability to develop a community microgrid powered by renewable energy and controlled by software has been a challenge. The Borrego Springs Microgrid, the subject of this report, is California's first renewable energy-based microgrid that can provide a sustainable, stable, software-controlled power solution for a California community during planned or unexpected electric outages.

San Diego Gas & Electric Company (SDG&E) recognized the importance of demonstrating a microgrid at a larger scale than previous versions. Specifically, SDG&E believed that a large enough microgrid, with renewable energy resources, could increase the energy resilience and reduce the carbon footprint of an entire community. Such a microgrid could also increase the community's energy reliability and support California's goals to reduce greenhouse gases that contribute to climate change.

SDG&E recognized, however, that renewable resources are intermittent, technologically complex, and costly, which may be why most utilities have shied away from such projects. SDG&E proposed improving the limited function and scale of most microgrids by including

renewable energy while simultaneously developing a reliable advanced microgrid controller. The goal was to develop, use, and manage a microgrid that provided a direct and significant benefit to a real-world community, while also supporting environmental sustainability.

For this project, SDG&E chose to improve its already established microgrid in Borrego Springs, California, to include the entire Borrego distribution substation, incorporate third-party owned solar PV resources located within the community, and develop an advanced microgrid controller. For flexibility and responsiveness, SDG&E developed the controller so that the microgrid could be operated both remotely from its Distribution Control Center and locally at the site.

The Borrego Springs community was originally chosen for the microgrid site because it is located in a remote area that has historically experienced many outages due to extreme and volatile weather conditions. The community also has a single transmission line feeding the substation, which makes it more vulnerable. The Borrego Springs community was also chosen because it already had a high concentration of private solar energy systems on resident's homes, as well as two commercial PV production plants in the vicinity (although only one commercially owned plant chose to be included in the project). For the privately owned solar resources, particularly rooftop PV, their lack of uniform energy flow made them difficult to account for and control during microgrid operations. SDG&E was determined, however, to take advantage of the substantial presence of these resources within the microgrid to generate the necessary energy to the community while reducing greenhouse gas emissions.

Project Purpose

The focus of the Borrego Springs project was developing a renewable-based microgrid that would island (disconnect from the grid) the entire substation, which serves approximately 2,500 residential and 300 commercial and industrial customers. In addition to the substation, SDG&E used a third-party commercial 26 megawatt (MW) PV system located in the community, approximately 3 MW of customer-owned rooftop PV systems, two 1.8 MW distributed generation resources, two substation batteries, and three community energy storage batteries to island the entire community during the day and, when necessary, dropping to critical loads at night.

The project team believed that the geographically remote community of Borrego Springs could benefit from its environment. SDG&E also believed that the benefits from this project would not be limited to Borrego Springs, and that the knowledge gained could be transferable to other communities. Other electrical utilities can also benefit from development of renewable energy microgrids that which can provide stable energy to communities when off the electric grid and help reduce greenhouse gas emissions.

The team already had the two primary assets necessary for the project in Borrego Springs: a base microgrid and indigenous and significant renewable energy resources. These individual assets, however, were never originally designed to work in unison. From the onset, this project had to overcome the hurdle of incorporating and reliably controlling third-party assets that

were never intended to be managed by the utility. Furthermore, this had to be accomplished using a microgrid controller that had yet to be developed.

Project Process

SDG&E led the project from its Kearny Mesa headquarters in the City of San Diego, California. SDG&E decided at the onset that this project needed a broad range of participants. Besides working with its top engineers and microgrid experts, SDG&E wanted to have external engineering review and input as well as involvement from the community the microgrid would service. With this in mind, SDG&E created its microgrid team: the National Renewable Energy Laboratory (laboratory testing); Spirae (software design); University of California, San Diego (academia); OSIsoft (open enterprise infrastructure); Borrego community members with the Anza-Borrego Desert Natural History Association; and NRG (renewable energy production). SDG&E chose these partners because of their unique experience and expertise.

The project team first created goals, objectives, and scopes of work for each aspect and phase of the project. With these in mind, the team created a detailed project plan, devised time lines, and determined individual and group responsibilities and success requirements. The project stakeholders and a technical advisory committee were involved in the overall process including defining requirements, system design, advanced microgrid controller development, testing, demonstration, analysis, and reporting. The project plan allowed for adjustments based on feedback and real-world results. Since this was a community-based project, the team included the Borrego Springs residents in every decision and phase of the project. The researchers also considered project cost, and performed tasks in the most economically efficient way possible.

After preparing the project plan, the team immediately started testing the concepts and plans in SDG&E's Integrated Test Facility. Once ideas proved true in the laboratory setting, they were passed on to SDG&E System Protection and Control Engineering to ensure the plan did not violate any system regulatory requirements or safety factors. For plan phases that involved external systems or components, such as the NRG solar plant, SDG&E either solicited assistance from or subcontracted with the entities that developed those components (as in the case of SunPower and Versus with the NRG controllers). Throughout the venture, the project team revised the plan as needed.

Project Results

The project team successfully accomplished most of its desired results, including effectively developing a system to island the Borrego Springs community and eliminate much of its vulnerability to interruptions of the electric grid. At the project conclusion, SDG&E and project team members:

- Expanding the existing microgrid facility boundaries to energize all the Borrego Springs customers by adding synchronizing relays, integrating third-party PV systems, hardening of electric overhead structures, and field automation.
- Developed an advanced controller that could successfully island the entire Borrego Springs community and all of its customers.

- Controlled the microgrid locally and from SDG&E's Distribution Control Center more than 80 miles away.

The project team successfully islanded the community on multiple occasions during daylight and nighttime conditions. The microgrid islanded the community using distributed power generation and energy storage, and incorporated the local third party 26 MW PV facility into the microgrid. The project results increased the ability to support the customers in the Borrego Springs community through a renewable energy based microgrid. The project also furthered the research of including multiple assets originally designed to work independently to instead work harmoniously together within a microgrid. All these actions are remarkable in that they were not previously accomplished at this scale, within an active community, and with non-utility energy producing assets, while simultaneously developing a microgrid controller/energy management system to manage the microgrid.

Some of the key lessons learned included:

- Dedicated subject matter experts are critical for each task area (system protection, distributed generation, testing, and so on), as well as for integration of each component of the microgrid.
- While each microgrid asset works as expected when run independently, the challenge with an advanced renewable-based microgrid is when the assets are combined together to island the load. When there are multiple assets, one resource becomes the "master" while all others become "slaves." This configuration requires an advanced microgrid controller with custom programming about each asset's capabilities are to allow the system to dispatch the right asset at the right time and maintain all assets in the optimum state.
- There are difficulties associated with islanding in a low-inertia environment that requires modification of protection setpoints and ride-through settings. ("Inertia" maintains electric system stability, and is provided through the spinning mass provided by rotating turbines in large electricity generating facilities which allows the system to "ride through" deviations in power frequency.)
- There are challenges associated with controlling third-party assets whose owners have no obligation to participate.
- The impact of 3 MW of customer rooftop solar, which has older inverters and protection settings, quickly results in removal of that generation resource from the grid.
- It is necessary to include additional fast response devices such as the Maxwell Ultracapacitor into the operating environment. The Maxwell Ultracapacitor was not funded by this grant, and was installed at SDG&E's expense.

As with any project, there is always more to learn. Although the Borrego Springs Microgrid project is completed, SDG&E and the project team members are committed to continuing the research to further incorporate the commercially owned and operated third-party renewable energy resources into the microgrid. Additional testing is scheduled for later in 2018, and there are continuing discussions about the possibilities of increased energy storage at the microgrid

and other improvements that could enhance the microgrid's overall stability and its ability to supply dependable, reliable energy to the community when the microgrid is needed for islanding purposes. The project team intends to continue to improve on its concepts and developments to improve the microgrid for the benefit of the community. Furthermore, the project team hopes to transfer the knowledge gained through this project through this report, public meetings, community events, and published fact sheets.

Benefits to California

The Borrego Springs Microgrid project has already benefitted Borrego Springs residents and promises to be even more beneficial in the future. The benefits of the project team's research and testing for the further development of the microgrid were experienced by ratepayers firsthand. During the previous demonstration project, the microgrid met the energy needs of the Borrego community for both planned and unanticipated situations in which the community would have otherwise been without energy. These past island events were performed manually and required significant prior planning, used limited renewable resources, required substantial human manual intervention, and could only occur while the microgrid was operating locally. The improved microgrid has been successfully used on multiple occasions to meet energy needs for the entire community during compliance and emergency maintenance work to the substation and its power delivery components. In these situations, unlike the previous demonstration project, events were executed locally and from SDG&E's control center, located more than 80 miles away, using the new advanced microgrid controller developed during this project. Without the improved microgrid and the advanced microgrid controller, the Borrego Springs community, including many senior citizens who rely on energy-dependent life support systems, would have had to endure long power outages, day and night, under extreme desert conditions. The microgrid project also provided economic benefits to the community by allowing storefronts, restaurants, and other local businesses to stay open during what would ordinarily be a power outage. This improved support to a vulnerable community was one of the primary reasons for developing the microgrid in Borrego Springs.

Besides the immediate benefit to the Borrego Springs community of uninterrupted energy supplies, this project has also significantly increased the microgrid knowledge base, particularly in the areas of software controllers and implementation of third-party resources. Through the project team's efforts, including significant research and testing by independent partners like the National Renewable Energy Laboratory, large amounts of data and investigation results have provided technical information needed to develop more efficient and effective microgrids and software controllers. This information provides benefits not only to the Borrego Microgrid, but also to almost all current and future microgrids throughout California.

The Borrego Springs Microgrid is not a temporary experiment for SDG&E, but instead, it is a commitment by SDG&E to its customers of Borrego Springs. The longer-term goal is to further leverage renewable resources for more dependable, resilient energy, while minimizing negative impacts to the environment.

CHAPTER 1: Introduction

Problem Statement

The town of Borrego Springs is fed by a single, radial 69 kilovolt (kV) transmission line which is approximately 30 miles long and experiences an elevation change of approximately 5,000 feet. As part of the Colorado Desert sub-region of the Sonoran Desert, the area experiences high winds and monsoonal storms which can lead to long duration outages during periods of high temperatures. San Diego Gas & Electric Company (SDG&E) has been actively developing a microgrid to provide energy resiliency for the approximately 2,800 year-round residents of Borrego Springs.

Due to technology advancements in communications, controls, and computers, microgrids have emerged as a new tool for a possible alternative service delivery model. The California Energy Commission has invested in the research, development, demonstration, adoption, and commercialization in support of development of microgrids. The United States Department of Energy (USDOE) defines the microgrid as ‘‘a group of interconnected loads and distributed energy resources within clearly defined electrical boundaries that acts as a single controllable entity with respect to the grid. A microgrid can connect and disconnect from the grid to enable it to operate in grid-connected or island mode.”

Microgrids have also been deployed that integrate traditional fossil fuel-based generation (in limited deployments) along with the renewable energy resources (such as solar photovoltaic and energy storage systems). SDG&E, with funding from the Energy Commission and USDOE in 2013, developed one such microgrid at Borrego Springs, in San Diego County. The previous “Borrego Springs Microgrid Demonstration Project” focused on the design, installation, and operation of a community scale “proof-of-concept” microgrid demonstration. The site of the microgrid was an existing utility circuit that had a peak load of 4.6 megawatts (MW) serving 615 customers within a remote area of the service territory. The key aspects of that microgrid demonstration project were integrating and operating the following types of equipment and systems:

- Distributed generation.
- Advanced energy storage.
- Price-driven load management.
- Fault location, isolation, switching, and restoration.
- Integration with outage management system/distribution management system and microgrid controls.

This project attempted to demonstrate the viability of a microgrid to manage high amounts (up to 100 percent) of renewable energy to meet the facility/community load, while avoiding adverse grid impacts, using a microgrid controller/energy management system.

SDG&E expanded the scope of its existing Borrego Springs Microgrid using the local, large 26 MW third-party solar photovoltaic (PV) system to enable the islanding of the entire Borrego substation during the day and to maintain critical loads as solar output drops. This project demonstrated a high-penetration, renewable energy-based microgrid in a California community.

Project Goals and Objectives

Goals

The goals of this project were to:

- Support the deployment of high-penetration, renewable energy based microgrids in California's industrial, commercial, and/or mixed-use facilities and communities.
- Demonstrate that microgrids can provide value to customers and the grid by enabling higher penetrations of renewable energy than the existing distribution infrastructure supports, while avoiding adverse grid impacts through the use of a microgrid controller/energy management system.
- Demonstrate that microgrids can operate with up to 100 percent renewable energy supply, and/or export renewable energy during periods of high renewable energy production or low demand.
- Encourage energy efficiency upgrades and flexible load to maximize the impact of renewables and avoid the need to export power during periods of over-generation.
- Produce technical and economic microgrid performance data, including documentation of installation issues, operational constraints, and operational performance (such as the number of hours a microgrid can operate independently off the grid).
- Identify barriers to deployment of high-penetration, renewable energy based microgrids (such as financing and regulatory requirements) for specific facility/community types, and solutions to the barriers.
- Determine microgrid configurations comprised of renewable generation, energy efficiency, flexible load, and energy storage that provide the highest value to owners, customers, and utilities.
- Create a replicable microgrid model by developing lessons learned and best practices.
- Develop use cases that maximize the daily operating value of high-penetration, renewable energy based microgrids for customers and the grid, including management of energy storage and flexible load to avoid exporting power when the grid experiences periods of over-generation.
- Use automation and communication strategies that optimize reliability, safety, customer savings, and environmental benefits.

Objectives

The overall objectives for this microgrid project were to:

- Develop microgrid technologies, including a controller that is commercially available and by having the controller to identify, isolate, and efficiently serve critical loads, and test phasor measurement unit-based control algorithms.
- Island the entire community of Borrego Springs during the day and to drop non-critical loads during the night. Additionally, the project would coordinate generation and loads, control storage, prevent export of power during over-generation, and limit other grid impacts such as harmonics, VAr imbalances,[1] and steep ramp rates consistent with SDG&E's requirements.
- Develop a microgrid that meets or exceed USDOE's 2020 goals of commercial-scale microgrid systems capable of reducing the outage time of required loads by more than 98 percent at lowest cost while reducing emissions by more than 20 percent compared to a backup distributed generator set.
- Enable the "smart inverter" functionality that meets the requirements of Institute of Electrical and Electronics Engineers (IEEE) 1547.1 or IEEE 1547.8 by working with SMA, the manufacturer of the 26 MWac PV array inverters.
- Use renewable resources to supply 100 percent of the community's load.
- Reduce energy use by using energy efficiency and flexible load where appropriate.
- Include engineering and interconnection infrastructure for additional energy storage devices.

[1] Volt-ampere reactive or VAr is a unit by which reactive power is expressed; reactive power exists in an alternating current circuit when current and voltage are not in phase, and is important in maintaining voltage in the power system.

CHAPTER 2: Project Approach

Task List

The overall project approach included the development and deployment of multiple technologies within Borrego Springs to meet the desired project objectives. The project plan was organized into the following tasks:

- Task 2: Advanced Microgrid Controller
    - This task included the deployment of a control platform that served as a microgrid controller for Borrego Springs. SDG&E selected Spirae's Wave™ control platform to be the Advanced Microgrid Controller (AMC). SDG&E also uses the term Distributed Energy Resource Management System (DERMS) to describe the implementation of Spirae's Wave™ at SDG&E. SDG&E intends to use the DERMS platform to monitor and manage Distributed Energy Resources at Borrego Springs, and other locations in its service territory. The project team initially intended to evaluate UCSD and OSIsoft innovative controls development for incorporation into the microgrid controller, but policy and business challenges prevented this.
- Task 3: Microgrid System Planning and Design
    - This task included planning and design of the Borrego Springs Microgrid to island the entire community during the day, reduce to critical loads at night and use energy storage to minimize generator operations. The project team evaluated the development of tools, techniques and equipment to provide visibility of the microgrid to the California Independent System Operator (California ISO). However, the California ISO chose not to get this information in real-time for their operations. Hence, the project team decided to not integrate the AMC with California ISO operations. Additionally, the project team made a strategic decision to not integrate electric vehicle (EV) smart charging and fleet management into the AMC operations. With limited EV resources at Borrego Springs, the objective to manage grid issues such as transformer stress and peak load through coordinated charging would not have been accomplished. SDG&E engaged with Maxwell Technologies to include their ultracapacitor in the preliminary design stage. The ultracapacitor is an emerging technology that is capable of storing and discharging energy very quickly and effectively. This engagement with Maxwell Technologies was outside the scope of the Energy Commission project but will benefit the Borrego Springs Microgrid. SDG&E continues to engage with Maxwell Technologies to implement the ultracapacitor in the near future.

- Task 4: Test Preparation
    - This task included experimental setup for a laboratory-scale, proof-of-concept, hardware-in-the-loop (HIL) evaluation that was undertaken at NREL's Energy Systems Integration Facility (ESIF). It included the use of Real-Time Digital Simulation (RTDS); the microgrid controller; distributed generator controllers; a battery energy storage system (BESS); a photovoltaic (PV) inverter; and the hardware/software interfaces among the RTDSs, controllers, and power hardware.
- Task 5: Test Execution
    - This task included the creation a detailed test execution plan and tests to evaluate the ability of the microgrid controller to meet the functional requirements for:
        - C1: Disconnection
        - C2: Resynchronization and reconnection
        - C3: Steady-state operation
        - C4: Protection
        - C5: Dispatch
        - C6: Enhanced resilience
- Task 6: Analysis and Reporting
    - This task included the analysis of test results and provide the necessary reports to fulfill the obligations of this research grant.
- Task 7: Evaluation of Project Benefits
    - This task included the reporting of the benefits questionnaire at three intervals during the project timeline:
        - Kick-off meeting benefits questionnaire
        - Mid-term benefits questionnaire
        - Final meeting benefits questionnaire
- Task 8: Technology/Knowledge Transfer Activities
    - This task included the development of knowledge gained, experimental results, and lessons learned into various artifacts that were made available to the public and key decision makers during project implementation.

Each primary task consisted of sub-tasks, which are documented as key developments in Chapter 3.

Project Team

Figure 1 shows the organizational chart illustrating team members that participated in the Borrego Springs Microgrid project.

Figure 1: Borrego Springs Microgrid Project Team

Source: Microgrid Energy Solutions

The roles and responsibilities of the project team members were:

San Diego Gas & Electric Company – Project Prime and Host utility

SDG&E was responsible for project management, deployment of the advanced controller, making system data available for model development and delivering a microgrid controller that meets the project requirements. Additionally, SDG&E was responsible for making system upgrades, deploying new equipment and measurement systems for the microgrid. SDG&E integrated the microgrid controller into its Distribution System Operations software environment. SDG&E served as the project management office responsible for executing contracts to allow team member participation in the project.

Technical Advisory Committee

USDOE, California ISO, and Lawrence Berkeley National Laboratory were part of the technical advisory committee established for the project.

Microgrid Community of Borrego Springs (Borrego Chamber of Commerce, Anza-Borrego Desert Natural History Association)

The Borrego Springs Chamber of Commerce reached out to the local community of Borrego Springs and worked with SDG&E to define the critical loads for the microgrid as well as determining cool zones during microgrid testing. Multiple large customer loads, such as resorts were identified in the community of Borrego Springs. They also supported on-going project activities related to community participation.

Spirae – Advanced Microgrid Controller developer

Spirae is under contract with SDG&E to develop a Distributed Energy Resource Management System (DERMS), which includes an advanced microgrid control application. Spirae provided the microgrid controller to NREL to verify performance with the project requirements. Spirae will also evaluate the UCSD and OSIsoft innovative phasor measurement unit (PMU)-based controls for incorporation in their product. Spirae conducted hardware in the loop testing to verify their controller's performance.

NRG, SMA, SunPower, Verus – 26 MW Solar Facility Team

NRG is the third-party entity that owns and operates the 26 MW solar facility connected to the 69 kV transmission system at Borrego Springs. SMA provided the inverters for the PV plant and SunPower provided the PV modules for the solar facility. Verus performed design work to connect the AMC to the NRG controller.

CAT/Hawthorne – Distributed Generation Provider

Two 1.8 MW CAT/Hawthorne generators situated at the microgrid yard in Borrego Springs were used for demonstration.

SAFT/ABB/Parker/ Maxwell Technologies – Advanced Energy Storage

Advanced Energy Storage (AES) units (identified as AES 1 and AES 2) in the report were used as battery energy storage systems for demonstration. The inverter and controls were provided by ABB and Parker Hannifin. Maxwell Technologies will be providing the ultracapacitor for installation at Borrego Springs (not part of this Energy Commission project but being pursued by SDG&E on another project).

National Renewable Energy Laboratory, OSISoft, and University of California San Diego – Real-Time Digital System (RTDS) and dynamic simulation tool development and testing

NREL, OSISoft, and UCSD were responsible for simulation testing via RTDS, to determine compliance of Spirae's microgrid controller with the technical requirements of the project.

eiPi10 - Testing and Integration

eiPi10 provided the technical support required during testing and integration of the AMC and other devices, both at the SDG&E lab and in the field.

Microgrid Energy Solutions – Analysis and Report Writing

Microgrid Energy Solutions (MES) provided analysis and report writing support to prepare the final report for submission to the Energy Commission.

Table 1 identifies the project schedule with various tasks that were completed during the project.

Table 1: Borrego Springs Microgrid Project Schedule

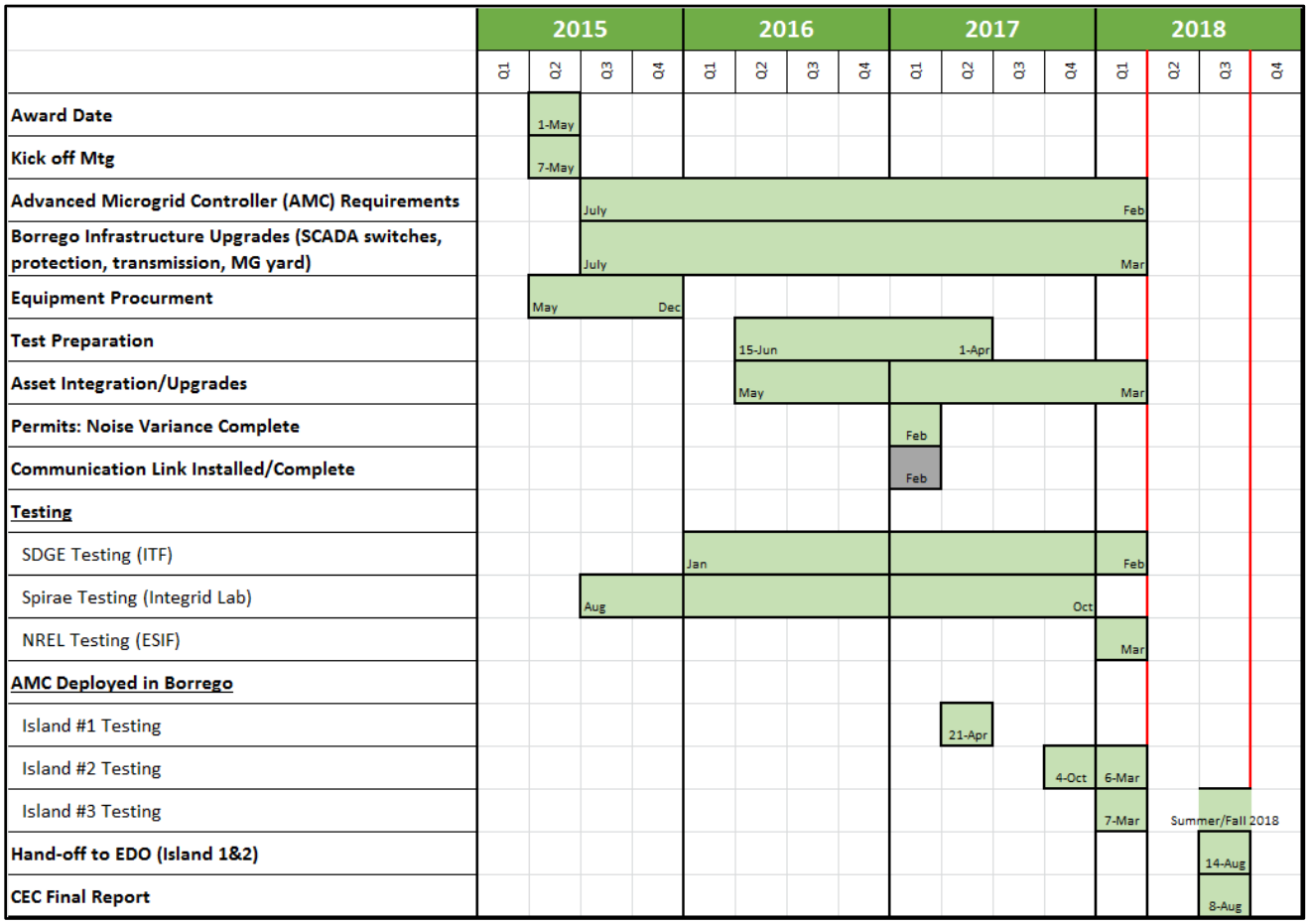

Source: San Diego Gas & Electric Company

CHAPTER 3:
Key Developments

Project Performance Site

The community of Borrego Springs is approximately 80 miles northeast of San Diego, California, in the northeastern area of SDG&E's service territory (Figure 2). This area is at the western edge of the Sonoran Desert, the Colorado Desert sub region, with summer temperatures sometimes exceeding 120˚ Fahrenheit. The Borrego substation is located about three miles from the community's center, near the Borrego Valley airport.

Figure 2: San Diego County

Source: Microgrid Energy Solutions

A Google Earth image of Borrego Springs is shown in Figure 3. The airport on the east side and a high concentration of solar PV is located on the southwest side of the community. Residences and a golf course are located in the lower center of the image.

Microgrid Circuit Analysis and Baselining

Borrego Substation and Circuits

The Borrego substation is served by a single 69 kV transmission line. At the substation, the voltage is stepped down to 12 kV to feed three radial 12 kV distribution circuits. The 12 kV electrical boundaries include a transmission interconnected large PV facility, a distribution substation and three 12 kV circuits, which serve the entire community. The point of common coupling is the transmission circuit breaker connecting the community to the remainder of SDG&E's system. Figure 4 and Figure 5 are photographs of the substation.

Figure 3: Borrego Springs Aerial View

Source: Google Earth

Figure 4: Borrego Substation - Looking South

Source: San Diego Gas & Electric Company

Figure 5: Borrego Substation – Looking North

Source: San Diego Gas & Electric Company

The community of Borrego Springs is served by three 12 kV distribution circuits: Circuit 1, Circuit 2 and Circuit 3 (the specific circuit numbers have been omitted for security concerns). The project team chose all three 12 kV distribution circuits that encompass the entire community of Borrego Springs for this microgrid project. These circuits are referred to as the "microgrid circuits" in this report. Figure 6, Figure 7, and Figure 8 present the single-line diagrams for the each of the circuits. Table 2provides a legend for the symbols used in the diagrams.

Existing Devices

The existing equipment and resources that were part of the Borrego Springs Microgrid include:

- Overhead switches controlled by Supervisory Control and Data Acquisition (SCADA) that provide connectivity from one microgrid circuit to another one of the microgrid circuits.
- Underground switches – This is a 5-way pad-mounted switch in the microgrid yard, adjacent to the Borrego substation. This switch provides the connection point for the microgrid assets that are installed in the microgrid yard. This switch, which is a Visible Fault Interrupter (VFI) with Visible Disconnect, provides over-current protection, and allows quick service restoration, eliminating the added expense and downtime associated with stocking and replacing fuses. The VFI along with its “Three-Phase” control provides remote functionality for monitoring through the SCADA system. Figure

9 presents the 5-way underground switch. The switch has three relays that protect the circuit from over-current due to faults.

Figure 6: Circuit 1 of Borrego Substation

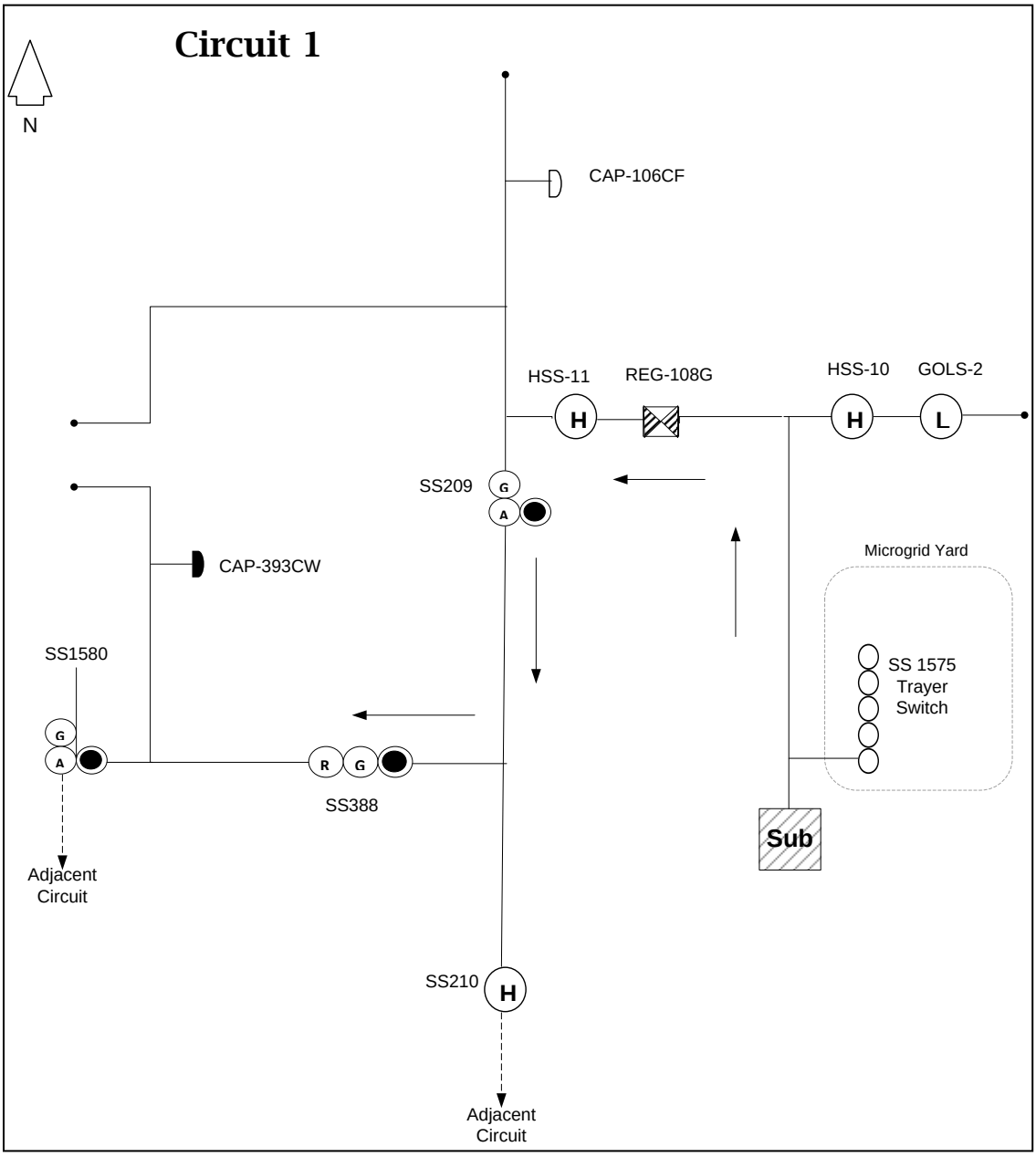

Source: San Diego Gas & Electric Company

Figure 7: Circuit 2 of Borrego Substation

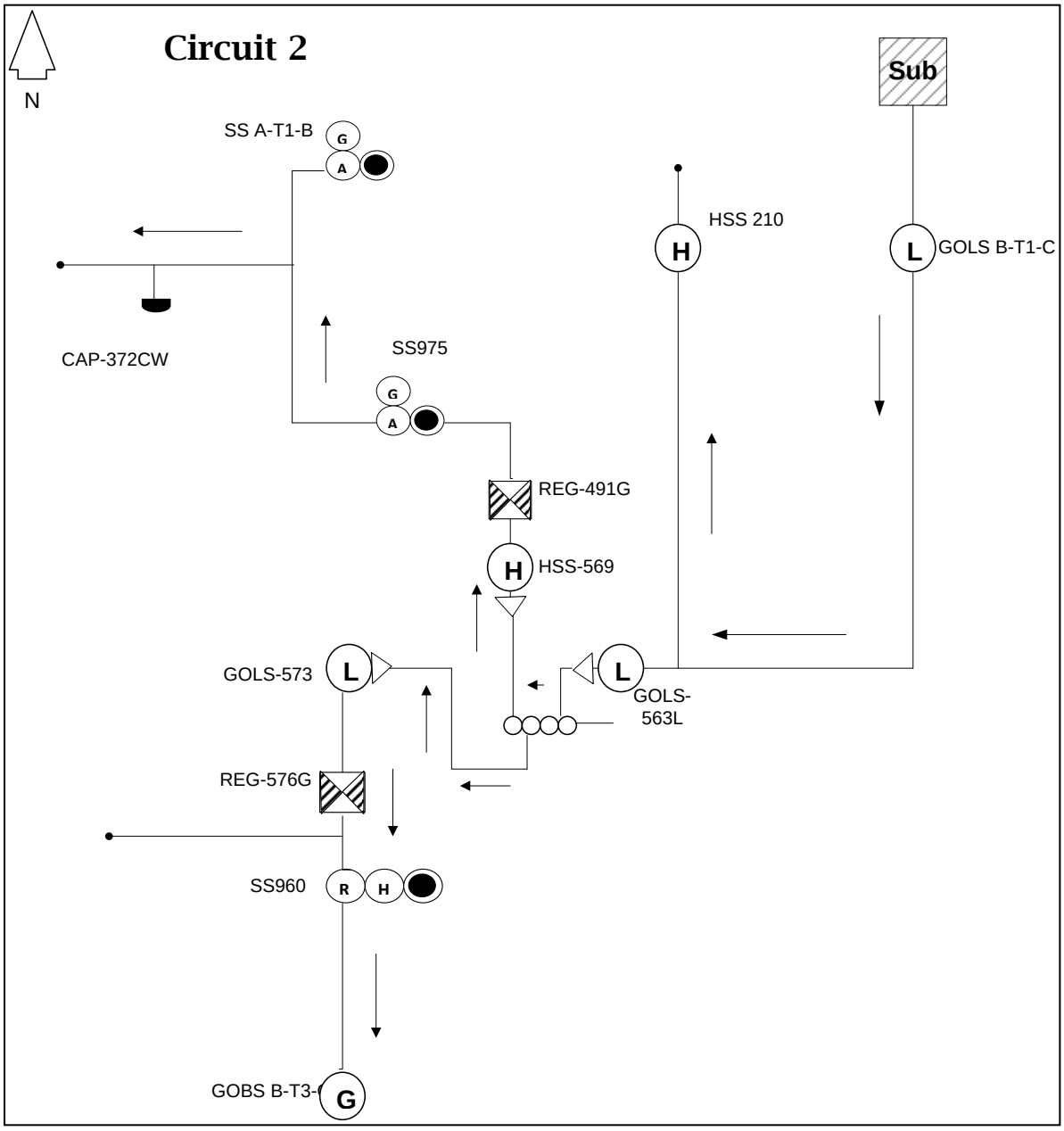

Source: San Diego Gas & Electric Company

Figure 8: Circuit 3 of Borrego Substation

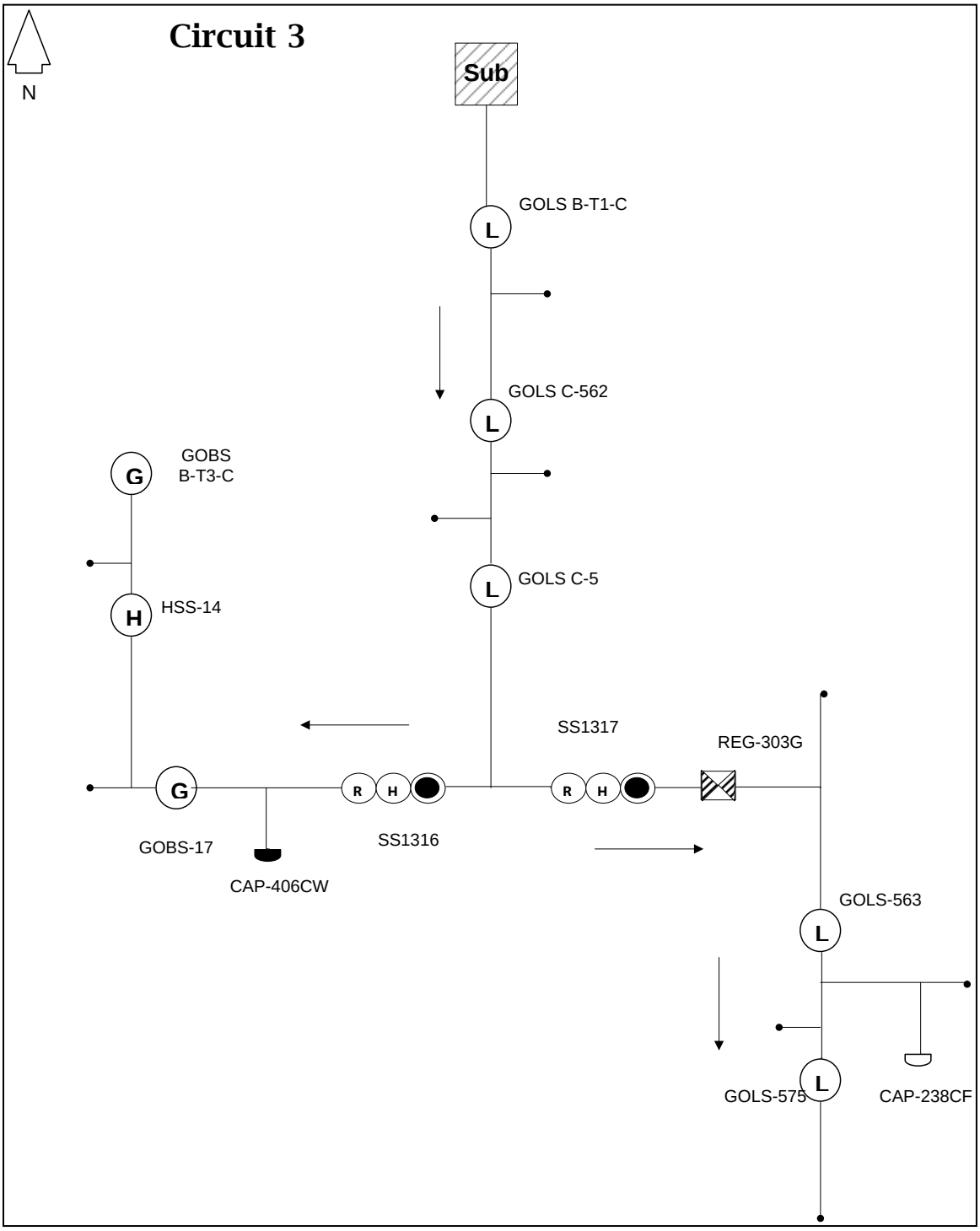

Source: San Diego Gas & Electric Company

Table 2: Legend for Symbols in Circuits 1, 2, and 3

Symbol	Description
H	Non-SCADA Switch
L	SCADA Switch
G	SCADA Switch
R H	SCADA Recloser
R G	Non-SCADA Recloser
G Δ	SCADA Switch
Sub	Substation
	Voltage Regulator (REG)
	SCADA Capacitor
	Non-SCADA Capacitor
	5-Way Pad Mounted Switch

Source: San Diego Gas & Electric Company

Figure 9: Five-Way Underground Switch

Source: San Diego Gas & Electric Company

- Capacitors
    - Substation Capacitor (Figure 10) - Capacitors are installed at the substation to compensate for the inductive load of the power transformers, conductors and circuit loads. The capacitors are controlled through a timer that is programmed to turn the capacitors on during times of high load and turn them off during times of lower load.

Figure 10: Substation Capacitor at Borrego Substation

Source: San Diego Gas & Electric Company

    - Line Capacitors - Capacitors are installed at various points on the circuits to improve system voltage and to improve the power factor of the loads. These capacitors are controlled using a scheme called “time bias with voltage override”. This scheme means that the capacitors will operate (turn on or off) based on a prearranged schedule unless the voltage is outside an acceptable range, in which case the capacitor operates in a manner that will keep the voltage as close to the desired level as possible.
- Voltage Regulators - SDG&E uses voltage regulators as electrical devices that compensate for variations in circuit voltage due to changing circuit load and automatically maintain a voltage level that is within a defined range. A regulator station consists of three single phase auto-transformers that are configured to operate as a three-phase device to control voltage in small increments. There are multiple voltage regulators installed on the microgrid circuits.
- Communication - Microwave systems, as well as leased lines from the local carrier, are used to provide communications from devices in the field back to SDG&E’s Mission Control Center. The Borrego substation microwave tower is shown in Figure 11.

Figure 11: Borrego Substation Microwave Communication

Source: San Diego Gas & Electric Company

- Distributed energy resource (DER) Assets – The key microgrid assets that existed prior to project implementation, and were deployed as part of the previous USDOE and Energy Commission Public Interest Energy Research (PIER) funding included:
    - Two 1.8 MW distributed generators marked as GEN 1 and GEN 2.
    - One advanced energy storage unit.
    - Three community energy storage units.

Microgrid Control Systems Baseline

The Borrego Springs Microgrid Demonstration project that was funded by USDOE and Energy Commission PIER program from 2009 to 2013 established a baseline for the microgrid control system that existed prior to this round of EPIC funding from the Energy Commission. The prior project funding was used to integrate microgrid resources that served one of the three circuits in Borrego Springs. The microgrid controller referred to as a "microgrid visualizer" from the previous effort was created using PI Process Book to act as the user interface. The microgrid operator could access the visualizer from the control van located within the Borrego Springs Microgrid yard or remotely from SDG&E's offices in San Diego. The visualizer user interface is presented in Figure 12 with key monitoring and control components for the critical SCADA switches, circuit load, each of the distributing generator (DG) units, advanced energy storage (AES) system, and system alarms. The DG units are the same units that were used in the prior demonstration project and in this project. The AES unit was a 500 kW/1,500 kWh Lithium Ion battery system that was deployed in the microgrid substation, also referred to as the substation energy storage (SES).

Figure 12: Microgrid Visualizer – Manual Mode Screen

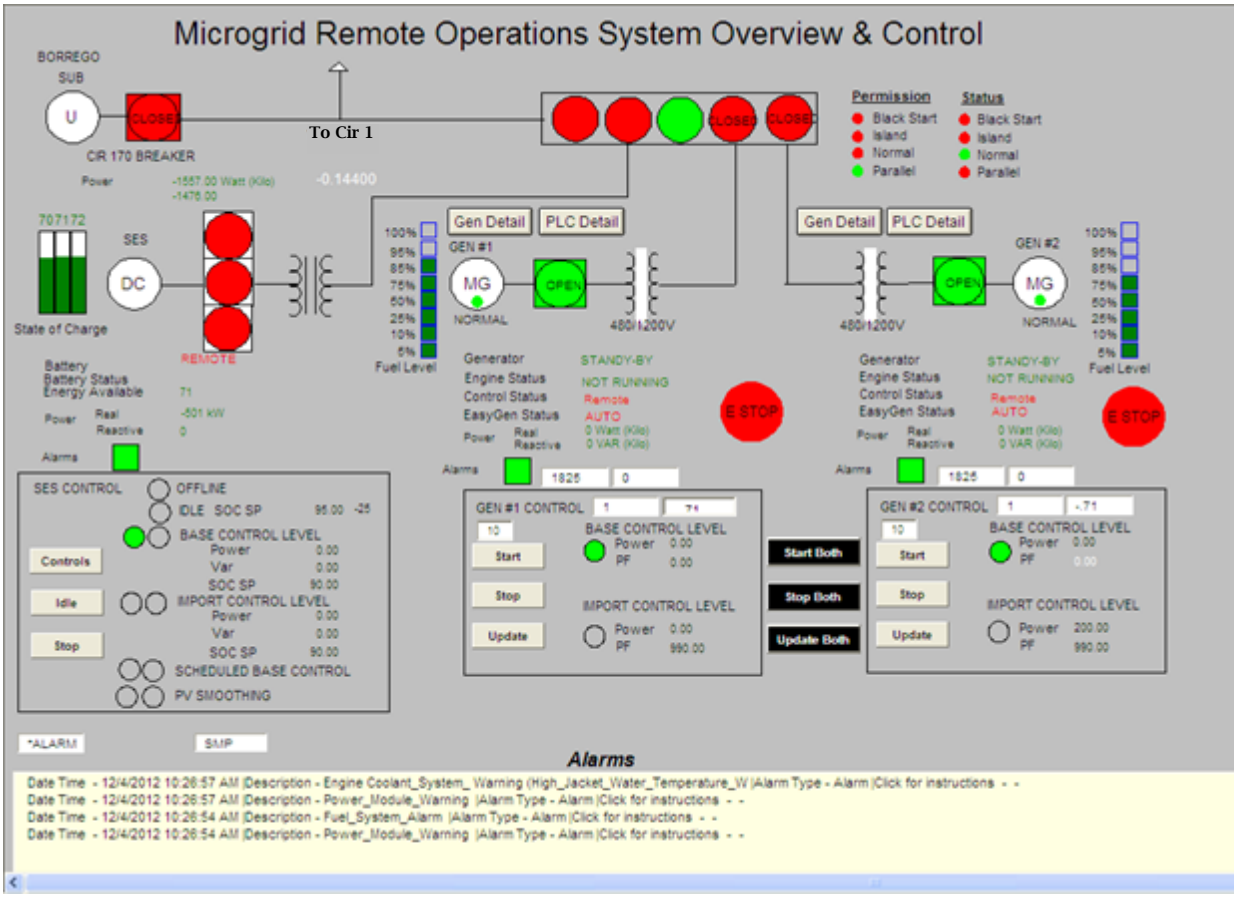

Source: San Diego Gas & Electric Company

Figure 13 presents an overview of the controls that existed for the Borrego Springs Microgrid as the work product of the previous USDOE and Energy Commission PIER-funded programs, and which formed the baseline microgrid controls for work undertaken on this project.

The microgrid visualizer provided the microgrid operator the option of operating the equipment in a manual mode or in a scheduled mode. The system was configured to continuously collect system data and store it in a PI database. Data could be easily extracted for analysis and reporting using a PI add-in for Excel.

The microgrid control system was used in the following demonstrations in 2012 – 2013:

- June 2012 - Planned outage where the microgrid provided power to 2,128 customers for about 5.5 hours.
- March 2013 - Conducted 7 planned islanding events over 3 days.
- April 2013 windstorm - microgrid provided power to 1,225 customers for about 6 hours.
- August 2013 Flash flood – The Community Energy Storage Systems that were deployed on the distribution circuit islanded six customers for about 5.5 hours.

- September 2013 Intense thunderstorms - microgrid provided power for up to 1,056 customers for more than 20 hours.

Figure 13: Microgrid Baseline Controls

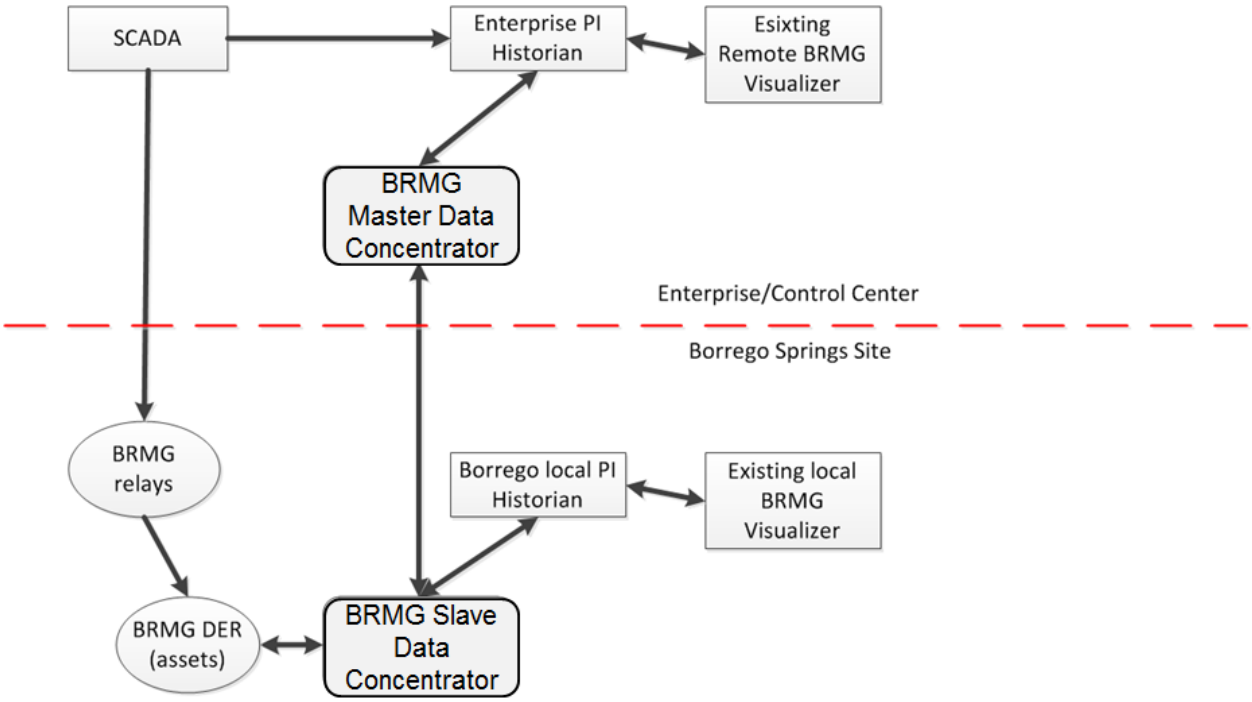

Source: San Diego Gas & Electric Company

It is important to remember the backdrop that the prior Energy Commission funding provided to the Borrego Springs Microgrid. The prior project laid the foundation for SDG&E and the community of Borrego Springs to advance the microgrid to another level using the Advanced Microgrid Controller technology that was provided through this EPIC round of funding from the Energy Commission.

Baseline Load – Parametric Analysis

A performance baseline was established by identifying and collecting key microgrid circuit metrics. For this purpose, it was important to characterize the microgrid circuits in terms of parameters such as peak demand (MW) on the circuit and reliability indices that were recorded on the circuits. Parametric analysis provides supporting data for predicting the peak demand on the circuit. This data was used to schedule the dispatch of multiple DERs in the microgrid circuit to achieve the project objectives. This baseline approach provided the basis for comparison with the data collected during the demonstrations.

Peak Demand (megawatt) – Microgrid Circuits

Historical data on the microgrid circuits was analyzed to develop daily load profiles for each month in 2013, 2014, and 2015. Table 3 and Figure 14 present a summary of the monthly peak demand for the microgrid circuits. The data shows a trend with higher peak demand in the

summer with an average peak of 10.10 MW. The highest peak of 10.76 MW occurred in July 2009.

Table 3: Microgrid Circuits - Historical Monthly Peak Demand (MW)

Month	2013	2014	2015	Average
Jan	8.12	6.88	9.80	8.27
Feb	6.49	6.71	6.20	6.47
Mar	7.16	9.77	7.43	8.12
Apr	7.39	8.04	7.36	7.60
May	7.87	8.63	7.93	8.14
Jun	9.10	9.97	9.35	9.47
Jul	9.79	10.76	9.36	9.97
Aug	10.09	9.83	10.38	10.10
Sep	8.93	10.31	9.52	9.59
Oct	6.59	9.13	8.29	8.00
Nov	5.81	6.49	6.58	6.29
Dec	7.94	8.83	8.65	8.47
Max	**10.09**	**10.76**	**10.38**	**10.10**

Source: San Diego Gas & Electric Company

Figure 14: Microgrid Circuits - Historical Monthly Peak Demand (MW)

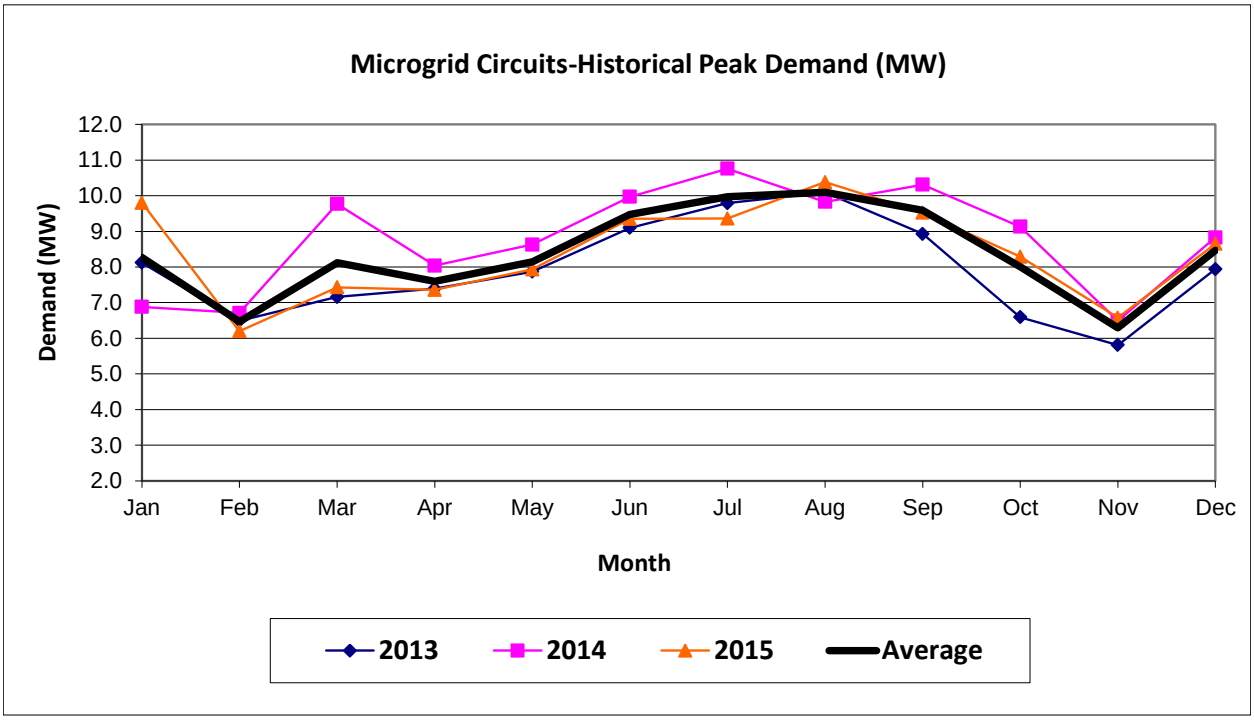

Source: San Diego Gas & Electric Company

Load Profiles from Parametric Analysis

The team analyzed hourly data to better understand the load characteristics on the microgrid circuits. Figure 15 and Figure 16 present daily load profiles for representative winter and summer months during 2015, with each line representing a day of the month. This data shows that the circuit has a unique load profile in that the day-time load is low and the circuit peak load occurs at night. The high night time load is due to the use of water pumps operated by the local water district and irrigation pumps operated by agricultural customers. The use of customer-owned PV shows that the daytime load demand is low on the circuit. This phenomenon is only increasing on the SDG&E circuits where there is increasing renewable energy penetration.

Figure 15: Microgrid Circuits Daily Load Profiles for the Month of February 2015

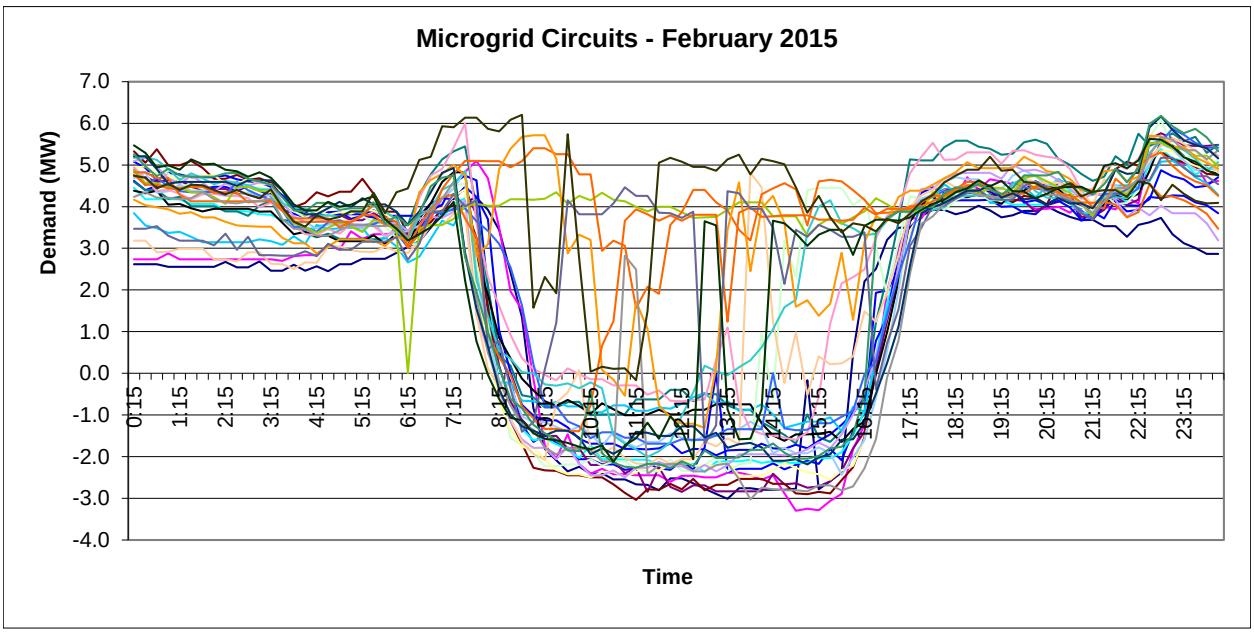

Source: San Diego Gas & Electric Company

For each month, the load profiles for the following critical day categories have been extracted from the raw data sets to represent the range of loads that the microgrid will need to address:

- Peak-MW Day:
  - The day of the month in which the monthly peak occurs.
- Maximum-MWh Day:
  - The day of the month that has the highest energy delivery for a 24-hour period.
- Average-MWh Day:
  - The day of the month that has the statistical average energy delivery for a 24-hour period.

Figure 16: Microgrid Circuits Daily Load Profiles for the Month of August 2015

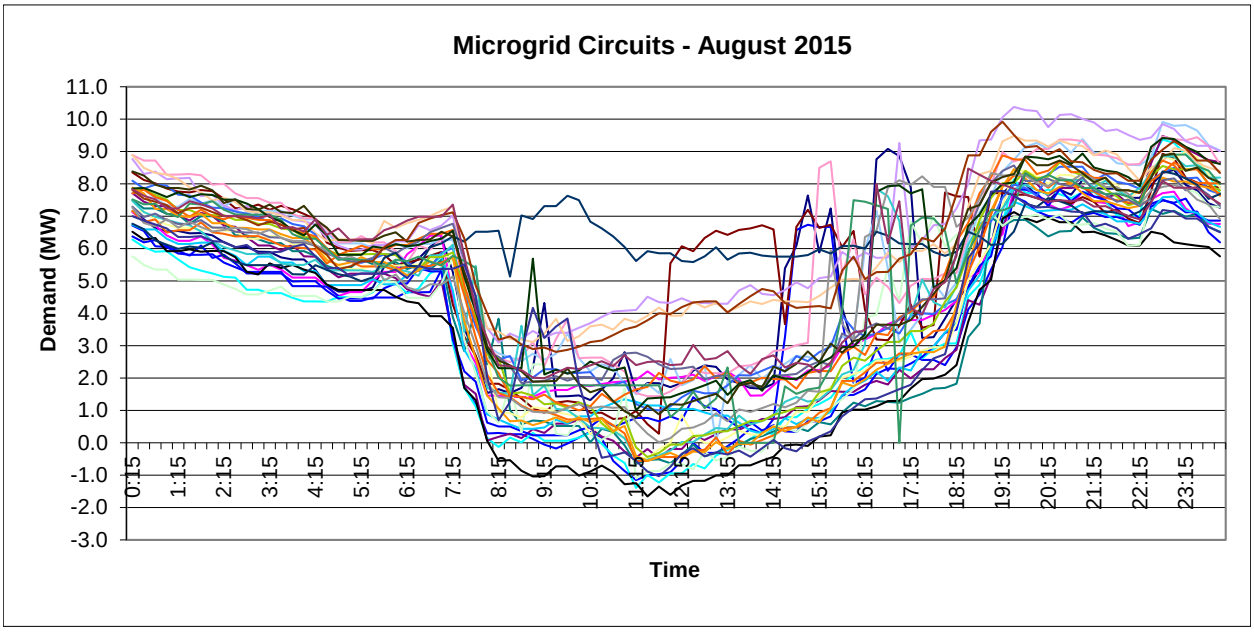

- Minimum-MWh Day:
  - The day of the month that has the lowest energy delivery for a 24-hour period.

Figure 17 and Figure 18 present these day types for February and August of 2015.

Figure 17: Microgrid Circuit Daily Load Profiles of Winter Critical Day Types - February 2015

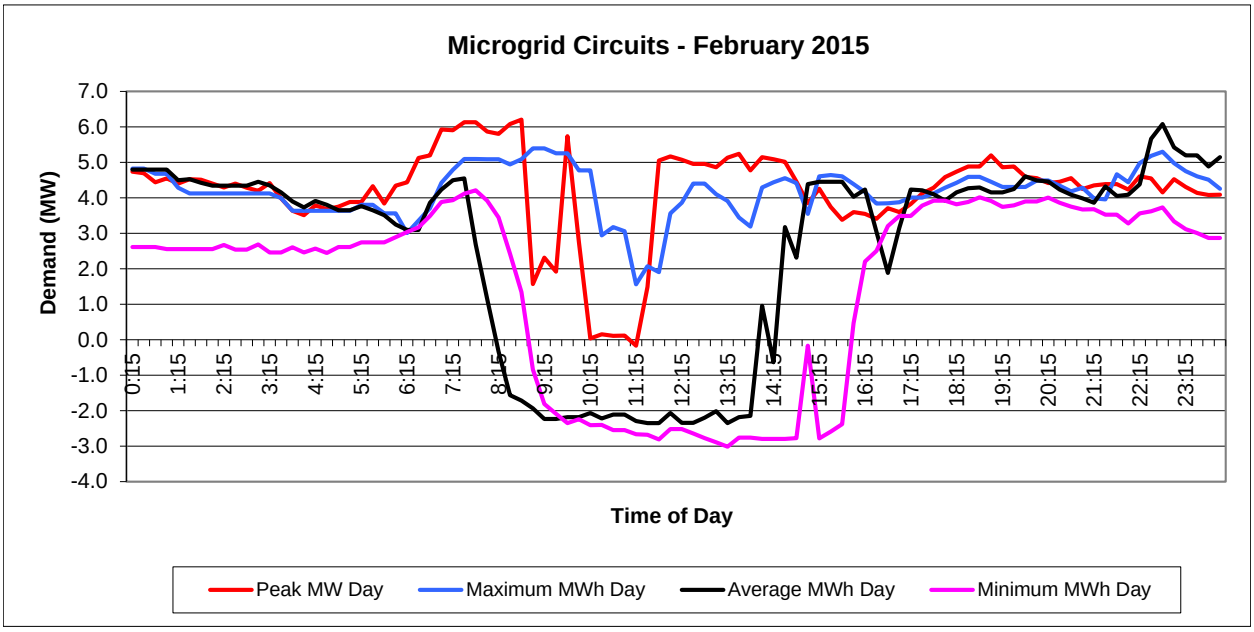

Source: San Diego Gas & Electric Company

The winter load profiles show that on average the load is higher in the early morning hours when residential customers are expected to be waking up and starting their day. Since there is no natural gas service in this area, it is expected that the primary domestic hot water load is served by electric hot water heaters. During the day the customer PV systems operate, which in turn, bring the load down on the circuit. During winter months, the intermittency and variability of the PV systems means that the circuit demand increases as cloud cover increases. This demonstrates the need for the SDG&E grid to be accommodating and ready to provide reliable energy as the customer PV systems reduce their production due to weather changes.

Figure 18: Microgrid Circuits Daily Load Profiles for the Month of August 2015

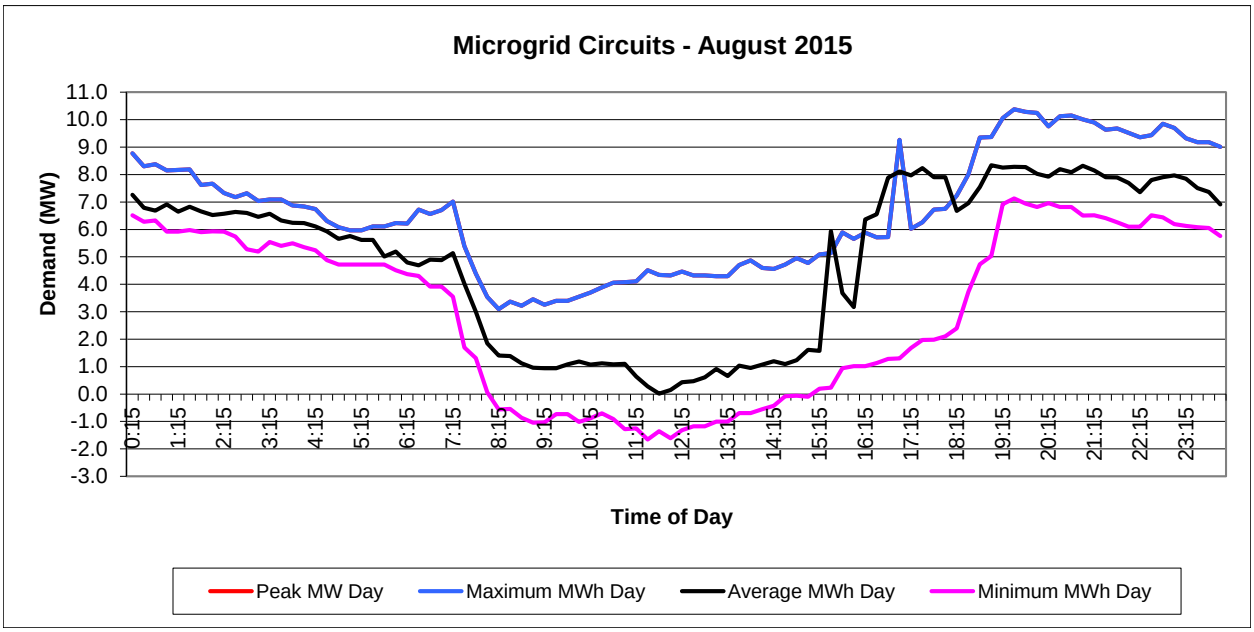

Source: San Diego Gas & Electric Company

The summer load profiles show that on average the load is highest during the night and morning hours and is the lowest at mid-day. The reason for this pattern of electric consumption is the presence of industrial customers who start their irrigation pumps at night time when the time-of-use rate has lower energy and demand charges. The day time load is consistently low as the customer PV systems are operational.

Performance Metrics

Power system performance is measured using several reliability indices that measure outage duration, frequency of outages, availability of system and response time to restore the system. The following reliability indices were analyzed on the microgrid circuits.

- System Average Interruption Duration Index (SAIDI)
- System Average Interruption Frequency Index (SAIFI)
- Momentary Average Interruption Frequency Index (MAIFI)

The metrics reported in the following tables excludes planned outages and includes both momentary and sustained unplanned outage events. Table 4summarizes the Borrego substation reliability performance metrics (for sustained outages) measured between 2015 and 2017 for all three circuits at the Borrego substation.

Table 4: Borrego Springs Annual Reliability Performance Metrics (Sustained Outages)

Year	Number of Sustained Outages	Number of Sustained Customers Impacted	Borrego SAIDI	Borrego SAIFI
2015	10	3395	76.68	1.2108
2016	26	16168	390.61	5.7517
2017	18	4608	101.02	1.6434

Source: San Diego Gas & Electric Company

Table 5 summarizes the Borrego substation reliability performance metrics (for momentary outages) measured between 2015 and 2017 for all three circuits at the Borrego substation.

Table 5: Borrego Springs Annual Reliability Performance Metrics (Momentary Outages)

Year	Number of Momentary Outages	Number of Momentary Customers Impacted	Borrego MAIFI
2015	7	5520	1.9686
2016	7	2521	0.8968
2017	7	2458	0.8766

Source: San Diego Gas & Electric Company

Table 6 summarizes the annual SDG&E system-wide reliability performance metrics (for sustained outages) measured between 2015 and 2017.

Table 6: System-Wide Annual Reliability Performance Metrics (Sustained Outages)

Year	Number of Sustained Outages	Number of Sustained Customers Impacted	System SAIDI	System SAIFI
2015	1909	882163	63.26	0.6184
2016	2212	972484	86.01	0.6773
2017	2096	846963	117.49	0.5849

Source: San Diego Gas & Electric Company

Table 7 summarizes the annual SDG&E system-wide reliability performance metrics (for momentary outages) measured between 2015 and 2017.

Table 7: System-Wide Annual Reliability Performance Metrics (Momentary Outages)

Year	Number of Momentary Outages	Number of Momentary Customers Impacted	System MAIFI
2015	286	494487	0.3466
2016	327	636414	0.4432
2017	298	498345	0.3441

Source: San Diego Gas & Electric Company

The values presented represent all outages recorded during the identified time periods. Reporting of reliability metrics to other agencies by SDG&E may differ due to California Public Utilities Commission reporting rules that provide for exemptions of some events based on specified criteria.

Figure 19 presents a histogram of outage durations between 2015 and 2017. The data shows that the average outage duration during for each of the years was:

- 2015: 127 minutes
- 2016: 165 minutes
- 2017: 210 minutes

Figure 19: Histogram of Outage Durations

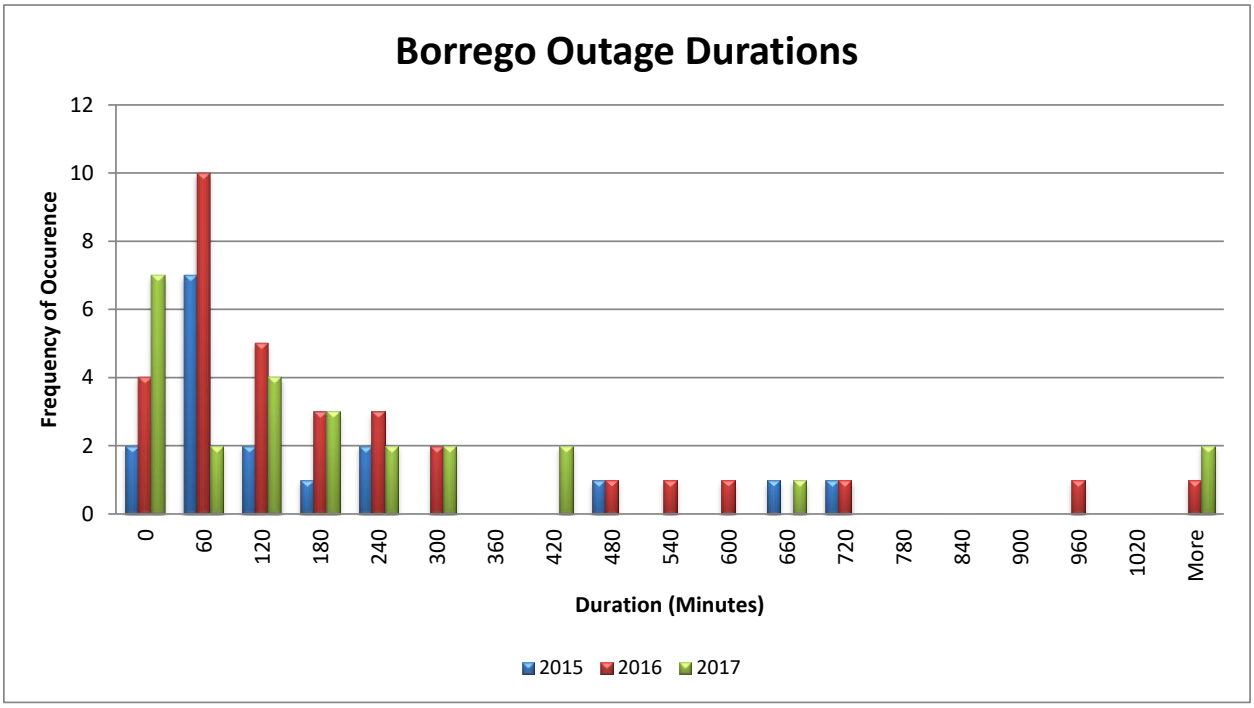

Source: San Diego Gas & Electric Company

The histogram shows that most of the outages (48 percent) are fewer than 120 minutes. This data demonstrates that integrating DERs presents an opportunity for the microgrid to improve reliability of the substation at Borrego Springs.

Microgrid Design and Operational Requirements

The objective of this task was to conduct the system engineering necessary to support a successful installation of the Borrego Springs Microgrid. This evaluation focused on system resources, microgrid operational requirements, and the system controls for the conventional grid and the microgrid.

Overall Architecture

The Borrego Springs Microgrid is a utility microgrid and provides an operational method for integrating a diverse set of DERs. It operates in three modes – microgrid non-operational, microgrid operational in parallel, and microgrid operational in island. The microgrid is capable of 3 different island configurations; this includes a single distribution feeder, the 12 kV distribution bus; and lastly the 69 kV transmission bus. Each island also has a different point of common coupling (PCC) that it references to transition to and from an island state. Most of the microgrid assets are connected to the 12 kV system with exception to the 26 MW third party owned solar facility, which is connected to the 69 kV system. Lastly, the microgrid uses numerous customer-owned DER (such as solar PV), also referred to as net energy metering (NEM) resources which are located at the customers premises, behind the meter.

The microgrid is designed to be operated under the following operating scenarios:

- Scenario 1 – Planned outage: In this scenario the microgrid provides continuity of service to microgrid customers when an outage is needed for the transmission line feeding the substation for maintenance or upgrade.
- Scenario 2 – Unplanned outage (with blackstart capability): This scenario occurs when a fault in the main grid creates an outage at the substation. The microgrid is run with blackstart operation of microgrid resources (such as the distributed generation resources) and sequencing the microgrid loads and resources in a balanced way and restore as many microgrid customers as possible.

When testing or in an island mode, the microgrid is controlled by the advanced microgrid controller application that is part of the larger DERMS platform provided by Spirae. The AMC adjusts the output levels of its resources to meet system needs by dispatching operating set points to the local controllers of the microgrid resources. The local controllers at the device level respond to these set points and also respond immediately to changes in load and to transients through governor control, automatic voltage regulation, and inverter controls (if islanded). The AMC also monitors the health and operating status of microgrid resources. The circuit configuration is displayed in the Distribution Management System (DMS) and SCADA. The AMC uses local configuration and status information to provide supervisory level control over the microgrid and provide Electric Distribution Operations (EDO) operators the status of

the microgrid, allowing alternative or proactive actions to be taken when deemed necessary or advantageous.

Figure 20 represents a high-level overview of the Borrego Springs Microgrid architecture. This architecture leverages existing utility systems, data warehouses and is expected to support a scalable solution that is capable of integrating multiple microgrids within the utility in the future.

Figure 20: Borrego Springs Microgrid Architecture Overview

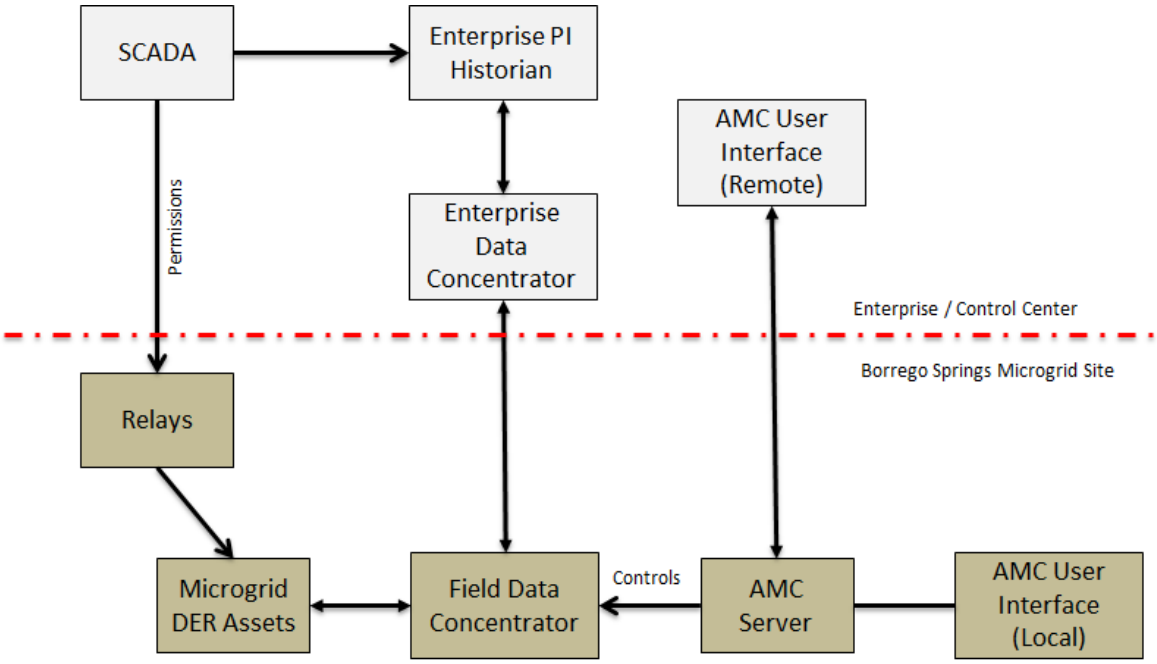

Source: San Diego Gas & Electric Company

Operational Requirements

This section discusses how the operational requirements were determined and what those fundamental requirements are for the microgrid, its interactions with the main grid, and the various types of microgrid resources.

Development of Use Cases

Use cases were developed to identify the functional requirements for the Borrego Springs Microgrid. The use case workshops were extensive and included subject matter experts from numerous SDG&E departments and project team members. This work captured various scenarios for operation and control of the distributed energy resources within the microgrid. The use case outputs were then used to identify the fundamental operational requirements for the microgrid processes and resources.

Table 8 identifies the use cases that were developed during design of the Advanced Microgrid Controller.

Table 8: Advanced Microgrid Controller Use Cases

Usability	
Feature	**Description**
Alarms	The alarms feature allows the user to view, acknowledge and clear asset and control group alarms. The alarms can be configured to a chosen alarm threshold, so users can be aware when an asset goes outside of its desired range.
User Interface	The AMC interface provides a one-line view and allows the user to drill down to individual DER, providing access to all available telemetry, status points, and alarms. Additionally, the user can control DER by manually inputting setpoints.
Microgrid Controls	
Feature	**Description**
Blackstart, Island & Resync	The AMC can recognize the available amount of load that can be supported, in real time, so that power can be restored in increments by dispatching DER to pick up load on the grid. The AMC also has the ability to seamlessly transition from parallel operations to island operations, or vice versa, by inputting voltage and frequency setpoints, and sending commands to the assets in the field, to ensure power quality.
Time to Live (TTL)	The AMC calculates the TTL of a resource in use based on fuel level, state of charge, and demand (future reservation), and present it in the form of an alarm when a threshold is near violation.
Optimization	The AMC performs spinning reserve management and asset selection according to a user-selected local optimization objective. Throughout all operations, the application provides situational awareness of each microgrid group.
AES Application	
Feature	**Description**
Group Control Modes	The AES application provides near real-time feedback-based control of groups of energy storage assets. The different modes are dispatched through the AMC reservation system and can be used by operators to support local distribution operations as well as system-wide objectives.
State of Charge (SOC) Management	This allows the user to view the asset or group of assets state of charge, and to also modify the setpoints to charge or discharge the individual asset or group of assets.
Constant Output	This feature considers asset availability and SOC constraints, to allow the user to set a group of storage assets to a constant active and/or reactive power set point (charge or discharge).
Import/Export Limiting	The AMC can control available resources to limit power flow across the microgrid PCC during planned islanding and during times of high power usage. This feature also allows the user to input import or export setpoints for both active and reactive power during grid-connected operations to meet operational objectives.

Source: San Diego Gas & Electric Company

Modes of Operation

The microgrid is designed to operate in three distinct and fundamental modes.

- Microgrid non-operational
    - In this mode of operation, electric service in Borrego Springs is provided by the conventional grid (69 kV line feeding the three 12 kV circuits of Borrego). The microgrid resources are not operating in this mode.
- Microgrid operational – parallel
    - In this mode of operation, microgrid resources support the electric service provided by the conventional grid. The microgrid resources (DG and AES) operate in parallel with the grid. The AMC manages resources based on defined operational objectives such as import/export control. In this mode, the level of power flow into or out of the microgrid is scheduled and then controlled and maintained by the AMC at the scheduled level. Peak loads as viewed by the main grid can be managed to achieve peak load reduction objectives.
- Microgrid operational – island
    - In island operation, the microgrid is isolated from the conventional grid supply and the resources are managed to ensure a balance between generation and load while maintaining voltage, frequency and power factor within limits. In this mode, the AMC plays a similar role in achieving the same objectives as those discussed above. But, in this mode, the main grid is not available to support the reliability of the microgrid. Specifically, frequency will now depend on the degree of balance between the microgrid resources and the microgrid load. Voltage must also be controlled, locally. Microgrid resources (such as DG) are designed to self- control, that is react to changes in frequency and voltage, locally and rapidly, when disturbances or transients occur. Once stabilized by the decentralized controls of the individual resources, the AMC takes over to ensure the objectives are optimized at the new operating point.

Control Method

A distributed level of control that has been successfully applied to managing operations of the main grid was used as a starting point for evaluating the best control method for the microgrid, recognizing the uniqueness of a microgrid system. The project team considered both a centralized control method and a distributed control method.

- Centralized control: The assumption for the centralized control approach was to incorporate the microgrid controller within or as a module of the Distribution Management System (DMS). All control actions for the microgrid would be centralized and made by the AMC. While a centralized control method might possibly simplify microgrid operations and its integration with other distribution systems and processes, it was quickly deemed to be unpractical for a number of reasons:

- Latest microgrid research has concluded that centralized control is not feasible due to the rapid response needed to address expected transients in real-time. Centralized control is the control method of choice for non-critical applications that can be applied over many seconds to minutes.
- Centralized control is vulnerable to single failures in communication or even loss of AMC functionality.
- Demands on communications would be very high – high speed, low latency, and extremely high reliability to support the near real-time response to transients required by microgrid resources.

- Distributed control: A combination of centralized control and decentralized control. The assumptions for distributed control were to use local controllers and systems in a distributed fashion to provide short term response and coordinate longer term response using a centralized microgrid controller. In this model, the AMC is responsible for dispatching microgrid resources and high-level data collection and analysis. This model is similar to the approach used for the main grid with some exceptions:
  - When the microgrid is in parallel operation, the natural response of the main grid (both inertial and governor/voltage regulator responses) will maintain system frequency and therefore microgrid frequency within limits. The main grid will therefore respond to most microgrid transients without any specific action from the microgrid control systems.
  - When the microgrid is in island mode, the inertial response provided by the main grid is not available. As a result, the microgrid is more sensitive to disturbances and transients. Decentralized local controls at the microgrid resources are useful in responding to changes in frequency and voltage. This action is analogous to the action provided by governor and voltage regulator actions at the power plants connected to the main grid. The function of these controls is to maintain reliability, stability and PQ within limits, not necessarily to optimize around efficiency, economics, or environmental metrics.
  - The AMC provides centralized control in both modes of microgrid operation (parallel and island). It operates over a longer time horizon and dispatches microgrid resources by adjusting their operating set points to achieve operating objectives.

  In this distributed control model, each of the microgrid resources have their own local controls for system operation and protection. These equipment-specific control systems provide for individual control to turn the equipment on and off, set the mode of operation, accept changes to operating set points, and trigger operational events.

To coordinate the operation of all the microgrid resources, the AMC was integrated into the microgrid. The AMC is designed to analyze and control actions within the microgrid such as islanding, dispatching DER, and power flow management to meet all longer term operational constraints within the microgrid. The AMC will operate against a defined set of objectives

within a set of defined constraints. As part of this microgrid design, the creation of islands is initiated through relay automation rather than the AMC.

Distributed Generation Operations

Two Caterpillar XQ-2000 Power Modules with CAT 3516TA Distributed Generators were used as the Distributed Generation (DG) component of the microgrid resources in Borrego Springs. Each generator set has a nominal generation capacity of 1,865 kW. These units can be controlled by the operators locally at the substation as well as through a remote interface via secure communication paths. The design includes the AMC sending commands and set points to the DG units. The DG units parallel with the grid through the generator breaker. The DG units provide two modes of operation when one or both units are paralleled with the grid:

- Baseload (constant output) - If the main breaker at the point of common coupling is closed and the AMC has selected "Base Load Mode" for either generator, the generator in Base-Load will operate to produce real (kW) and reactive (kVAr) power at the generator terminals that satisfy its current power (kW) and Power Factor set points.
- Import control (peak shaving) - If the microgrid circuit main breaker is closed and the AMC has selected "Import Control Mode" for one or both DG units, the generators will attempt to follow load to maintain real power flow to the microgrid through the microgrid circuit main breaker at or below the specified Import Control set point. If more than one generator is online in "Import Control Mode" the respective controllers will share load equally between the two generators to maintain real power flow to the microgrid through the microgrid circuit main breaker at the Import set point. Relative loading will vary to maintain the Import Control Power Factor set point.

The DG units provide a single mode of operation (Island Operating Mode) when the microgrid is in Island operation from the main grid.

- Island operating mode -When the microgrid circuit main breaker is open, each operated DG controller will load its engine generator to assume all available microgrid circuit power demand and kVAr load, sharing load equally between all operating generators. The generator controller will manage generator terminal voltage to affect VAR flow and must manage circuit demand within the constraints of the generators.

SCADA Integration and Protection System: SDG&E's SCADA system was used to provide coordinated operation of existing switches and breakers within and at the boundary of the microgrid circuit. To maintain continuity with existing operations, the generator breaker protection is integrated into the existing SCADA system via fiber-optic communications between the generator breaker protection relays and the protection relay on the main breaker at the PCC. The following SCADA commands are used to manage the switching actions to transition the microgrid between its various operating states of Normal (Grid power only), Parallel (DER + Transmission), Island (DER power only), and De-energized (No power).

- Parallel command - Enables a sync-check across the generator breaker, allowing it to close when the generator output has matched frequency, voltage, and phase angle with the microgrid PCC and connected substation.

- Normal command (break parallel) - This command forces the DG units to disconnect ("break-parallel") from the substation leaving the microgrid circuit supplied by only the transmission network.
- Island command - Enables the generators to pick up the entire load of the microgrid circuit. The generators operate to drive power flow to zero across the substation breaker. When this is accomplished, the microgrid PCC is opened and the microgrid is separated from the substation and operating as an Island.
- Black-start command - This command (in the event of complete loss of power to the substation) enables a substation dead-bus check by the protection relay on the microgrid circuit breaker and opens the microgrid main breaker. Further, it facilitates the closing of the generators into the dead bus, energizing the microgrid circuit in an island operating state.

The DG controller's operational mode selection, set points, and operational status are accessible from the AMC via secure communications. On the network communication path, a dedicated microgrid gateway has been provided in the microgrid yard as the interface point for the generator controllers. Network communications between the generator controllers and the gateway use MODBUS-IP protocol. Network communications between the microgrid gateway and SDG&E back-office systems occurs via a proprietary protocol. The AMC communicates with the field data concentrator using DNP3.

AES Operations

The AES component of the DER for the Borrego Springs Microgrid project comprised of three Lithium Ion battery systems; AES 1 (0.5 MW), AES 2 (1 MW), and AES 3 (0.25 MW). The AES are capable of serving multiple purposes, each represented by a control mode. All functionality is managed by the AES to be within equipment rating capabilities and self-protection requirements. The AES unit is capable of operating in the following modes.

- Constant power charge and discharge modes
    - The AES user interface to the PCS controller provides for scheduling the AES for simultaneous constant kW and kVAr level output (any combination) as specified by the user and within the AES capabilities. Alternatively, constant kW level or kVA level and power factor may be specified.
    - The AES user interface to the PCS controller allows for selecting the desired time duration of the mode of operation. Options are to include a specific time period (start/stop) and an indefinite duration period which would continue until cancelled or overridden
    - Within this mode the PCS provides for the operator to set a specified time to re-charge (or discharge) the AES so it is ready for the next day's constant power event. Once programmed, it is expected the AES is capable of repeating a cycle in this mode on a daily basis without operator attention.

    - The scheduling interface accommodates seasonal and weekly schedules, and also allows for the differentiation of weekdays, weekends and holidays.
- Peak load management mode
    - The AES is capable of maintaining fixed load at the microgrid circuit main breaker. The AES monitors the output of a power meter that is installed at the microgrid circuit main breaker.
    - The AES user interface provides for selecting the mode and set point value (kW). The set point value is user selectable and prevents entries that exceed the limits of the AES capabilities.
    - The AES user interface allows for selecting the desired time duration of the mode of operation. Options are to include a specific time period (start/stop) and an indefinite duration period which continue until cancelled, overridden or operations are outside the limit of the AES capabilities.
    - The PCS algorithm uses the external signal information, along with the set point value to compute and directs the proper charge/discharge battery operation. The battery is expected to discharge at a power level sufficient to prevent the set point value from being exceeded on the selected grid component (within the AES capacity capabilities and within reasonable tolerances)
    - The PCS algorithm monitors the state of charge on the battery and can be set to operate at setpoint.
- PV smoothing mode
    - This mode allows the AES to add or subtract power to the grid based on the rate of change of power being injected from a solar array/PV.
- Standby mode
    - The AES system neither charges nor discharges, but only draws necessary auxiliary load. In the Standby Mode, the AES contactors are closed. Generally, this mode of operation is directed by the PCS or remote control as required to protect the health and safety of the AES and to meet the requirements of applicable standards for interconnecting distributed resources to the electric power system
- Shutdown mode
    - The AES system may open its contactors to prevent interaction with the grid (nominal auxiliary load contactors may continue to serve these loads). Generally, this mode of operation is directed by the PCS or remote control as required to protect the health and safety of the AES and to meet the requirements of applicable standards for interconnecting distributed resources to the electric power system.

At the time of this writing, these AES functions were not integrated with the current version of the AMC.

Third Party Solar PV Operations

The AMC developed for the microgrid can interface with the 3rd party solar system. This is the 26 MW solar facility operated by NRG. The project design included integration of this large renewable resource at Borrego Springs to leverage high penetration renewable energy, reduce dependency on fossil fuels, and improve operational reliability during islanded operations. The solar facility uses SMA inverters with which SDG&E did not have a direct interface. However, as part of this project, the settings in the SMA inverters were upgraded to allow for greater fluctuations in voltage and frequency. This was imperative to improve control during islanded operations by enabling the on or off, ramp up/ramp down of the solar facility output using the utility operated AMC. Figure 21 presents a high-level overview of the interaction between SDG&E's AMC and the third-party solar system from NRG.

Figure 21: Advanced Microgrid Controller Interface with Third-party Solar System

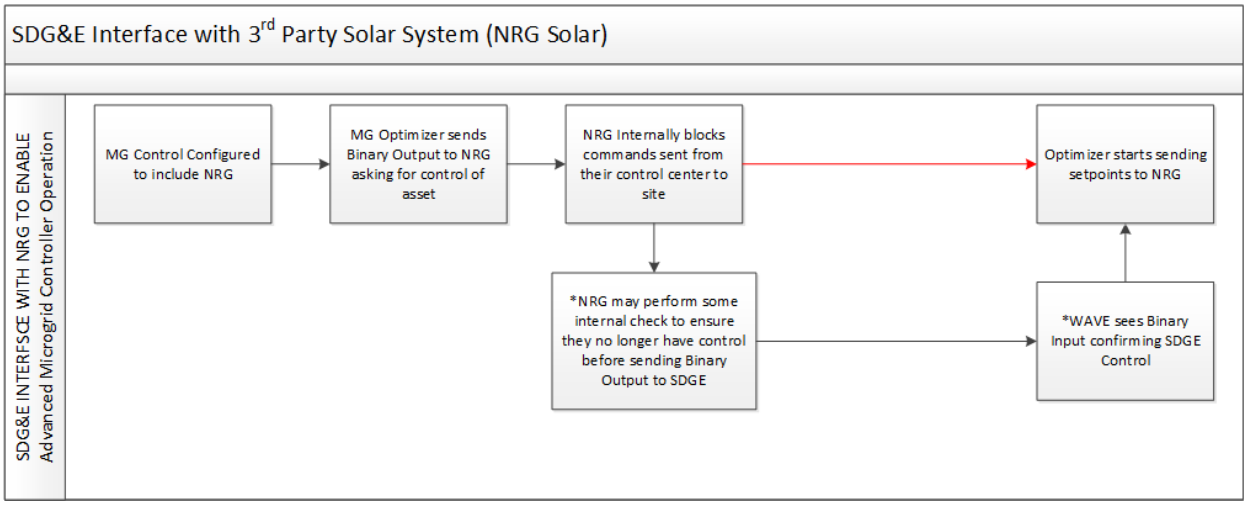

Source: San Diego Gas & Electric Company

Following are the modes of operation that were designed for interaction between the AMC and the third-party solar system.

- Base mode (Figure 22)– Constant Output Mode: In this mode the AMC sends a set point (P or Q) for the PV system operation.
- Peak Shave Mode (Figure 23) – In this mode the AMC sets a limiting power set point across the point of common coupling to curtail the output of the PV system.

Figure 24 shows the data exchange and flow between the AMC Controller and the third-party PV system.

Figure 22: Third-party Solar System – Constant Output Mode Operation

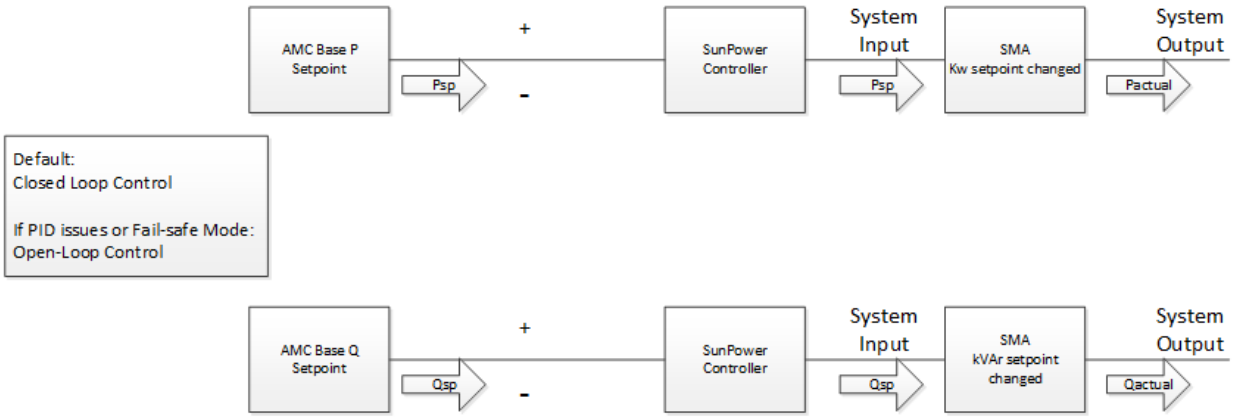

Source: San Diego Gas & Electric Company

Figure 23: Third-party Solar System – Peak Shave Mode Operation

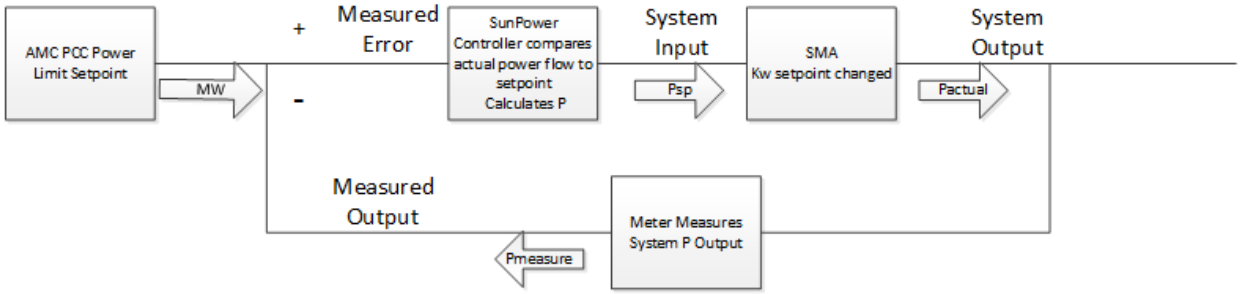

Source: San Diego Gas & Electric Company

Figure 24: Data and Controls Path Between Advanced Microgrid Controller and Third-party Solar Facility

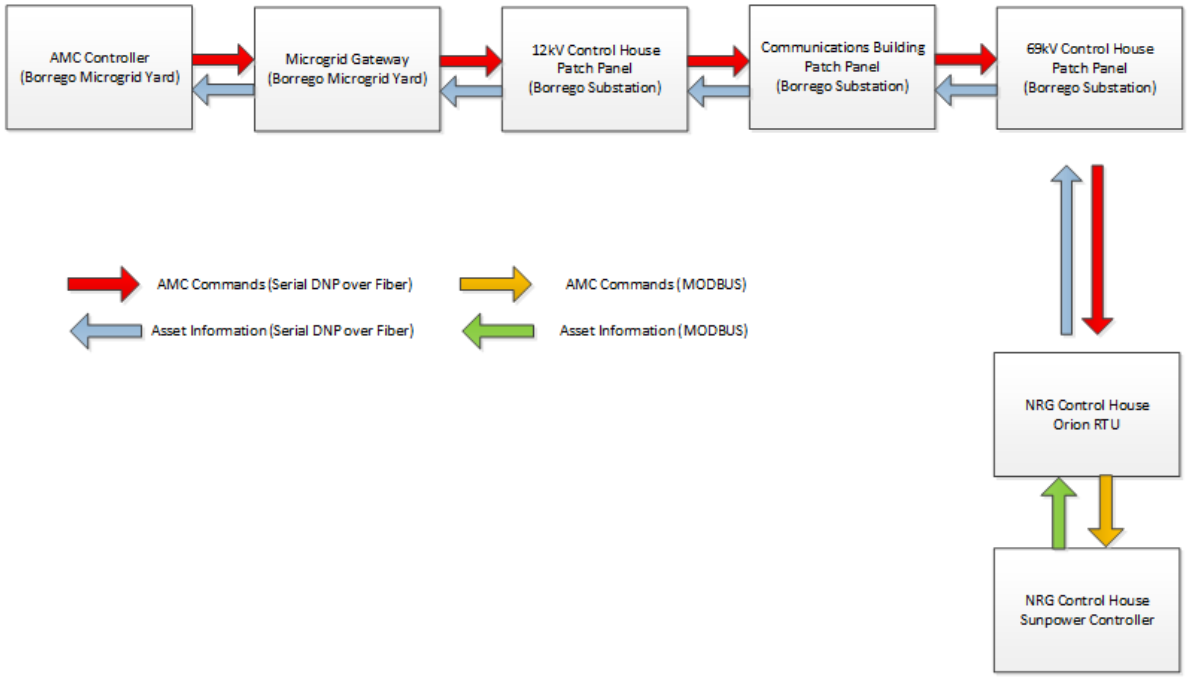

Source: San Diego Gas & Electric Company

Information Exchange

Table 9 on the following page summarizes the information exchanged between the AMC, the microgrid resources and backend utility systems.

Advanced Microgrid Controller Development

SDG&E is building a distribution energy resource management (DERMS) platform to integrate all DERs in its service territory. The AMC developed as part of this project integrates the microgrid assets with the DERMS operations. This was made possible with the implementation of our project team member's AMC functionality through its DERMS platform. This allows for greater operational benefits to be realized with the microgrid assets.

The AMC determines the preferred operating state of the microgrid based on the assessed state and operational constraints of the system. The AMC "optimizes" the behavior based on objective function(s) that evaluate the relative values of economic, environmental, and reliability factors. The AMC performs optimization considering the reliability objectives of maintaining voltage levels and supporting circuit load. It can dynamically weigh microgrid objectives and implement multiple objectives simultaneously (such as providing VAr optimization and Reduced Load Shaving at the same time). It will provide the Electric Distribution Operations (EDO) with the ability to monitor and control microgrid operations.

Table 9: Microgrid Information Exchange

Microgrid Process Interface	Information Exchanged
SCADA	Switching Device Status Distribution Circuit Analog Information Capacitor Device Status
DMS	Microgrid Circuit Network Topology Switching Requests Outage Restoration Time (ETR)
AES	Battery Status Information Analog Parameters (kW, kVAr) Mode of Operation State of Charge
DG	Generator Status Information Generating Analog Parameters (kW, kVAr) Generator Modes of Operation Fuel Level
3rd Party PV	Analog Parameters (kW, kVAr) Mode of Operation Event Request Historical Production Data
Data Warehouse	Storage of Operational Data Historical Data Storage and Lookup
Weather	Current Weather Conditions Forecast Weather Conditions

Source: San Diego Gas & Electric Company

The AMC is designed to perform the following optimizations:

- Perform EMS optimization: The AMC provides overall energy management services of the microgrid assets to ensure the stability and safe operation of the microgrid. The AMC performs required calculations necessary to maintain the power quality and use the results of optimization routines to develop control inputs for microgrid resources.
- Control voltage: The AMC monitors and controls voltage within the microgrid using DG (including generators) and AES to for voltage support.
- Control frequency: The AMC monitors and controls frequency within the microgrid, especially during island mode of operation. It will control frequency with the DG devices. Adjustments to frequency are meant to be done frequently to maintain a stable system. In microgrid operational parallel mode, the grid monitors and maintains frequency.
- Control VAr: The AMC monitors and controls VAr flow within the microgrid, especially during island mode of operation. In microgrid operational parallel mode, the AMC is capable of managing the VAr flow within the microgrid through the PCC. The AMC performs VAr optimization for power management of DER using AES in the microgrid. The AMC is capable of incorporating capacitor bank schedules in its optimization algorithms and calculate optimized VAr schedules for the microgrid.

- Optimize power reliability: The AMC power reliability algorithms determine the set of microgrid resources to maximize customer availability using both generation resources and advanced energy storage. The power reliability algorithms determine if power can be restored to portions of the microgrid and determine what microgrid resources can be used to improve reliability.
- Optimize DER: The AMC develops a plan to operate microgrid resources as needed to optimize the microgrid operating objectives. The DER optimization plan considers reliability, economic and environmental objectives as input from microgrid control objectives. The AMC's DER plan considers whether the microgrid is operating in an islanded or connected mode. The AMC considers the constraints of each DER resource (for example AES capacity and discharge/charge rate), the selected mode of operation.

Microgrid Infrastructure Upgrades

This task addressed the infrastructure upgrades, installation and integration of equipment and resources in the microgrid that were used for the project. Following activities were undertaken to upgrade the infrastructure necessary to support integrating resources within the microgrid:

Circuit Reconfiguration

The baseline analysis revealed many manual operations that were undertaken in Circuit 1 of Borrego Springs with the back feeding into the 12 kV bus from the existing microgrid resources were also done by manual switching. The project team undertook the following efforts to reconfigure one of the microgrid circuits for effective system operation:

- Looping of Circuit 1 into microgrid yard (Figure 25) – This was undertaken via the 5-way pad-mounted switch to increase flexibility to feed any one of the three circuits in Borrego Springs, depending on operational needs.
- Installation of SCADA switches (Figure 26) – SCADA enabled switches that could be operated remotely through SCADA were placed strategically throughout Borrego Springs. This was completed to increase availability of real-time information on circuits, increase flexibility to pick up/restore/sectionalize loads more effectively, and reduce the duration of potential assessments and patrols to achieve economic efficiency and minimize customer impact during grid outages.
- Upgrades to SCADA capacitors and wireless fault indicators – Existing overhead capacitors and wireless fault indicators were upgraded to increase availability of information on circuits and reduce duration of potential assessments and patrols.

Figure 25: Reconfiguration of Circuit 1 - Loop into Microgrid Yard

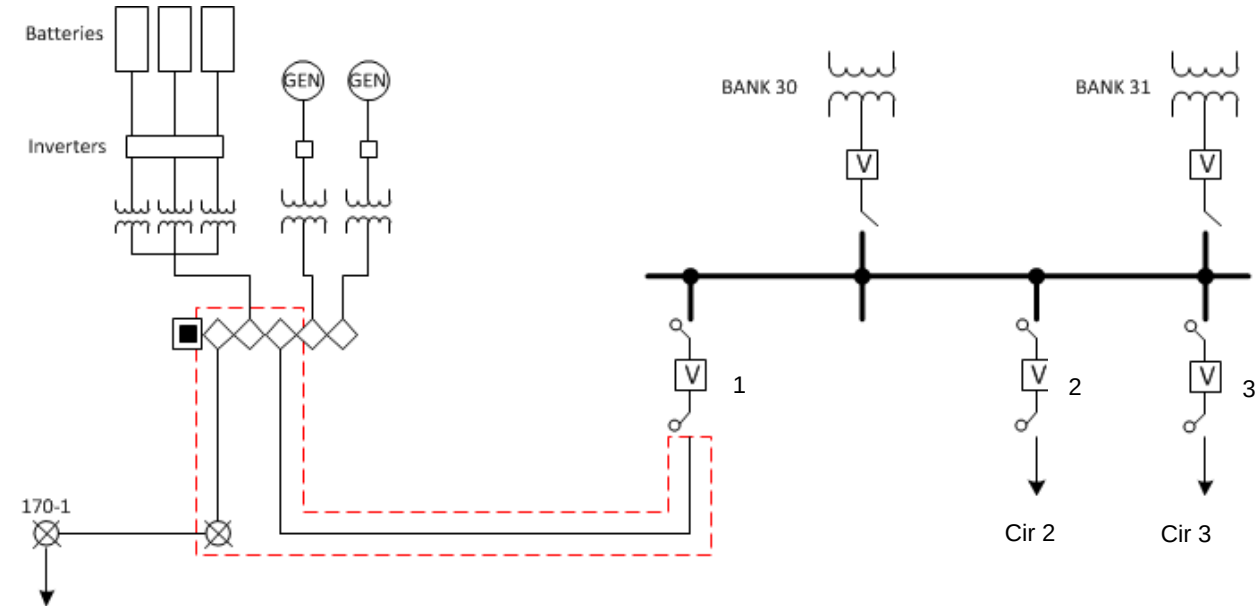

Source: San Diego Gas & Electric Company

Figure 26: Reconfiguration of Circuit 1 - SCADA Switches

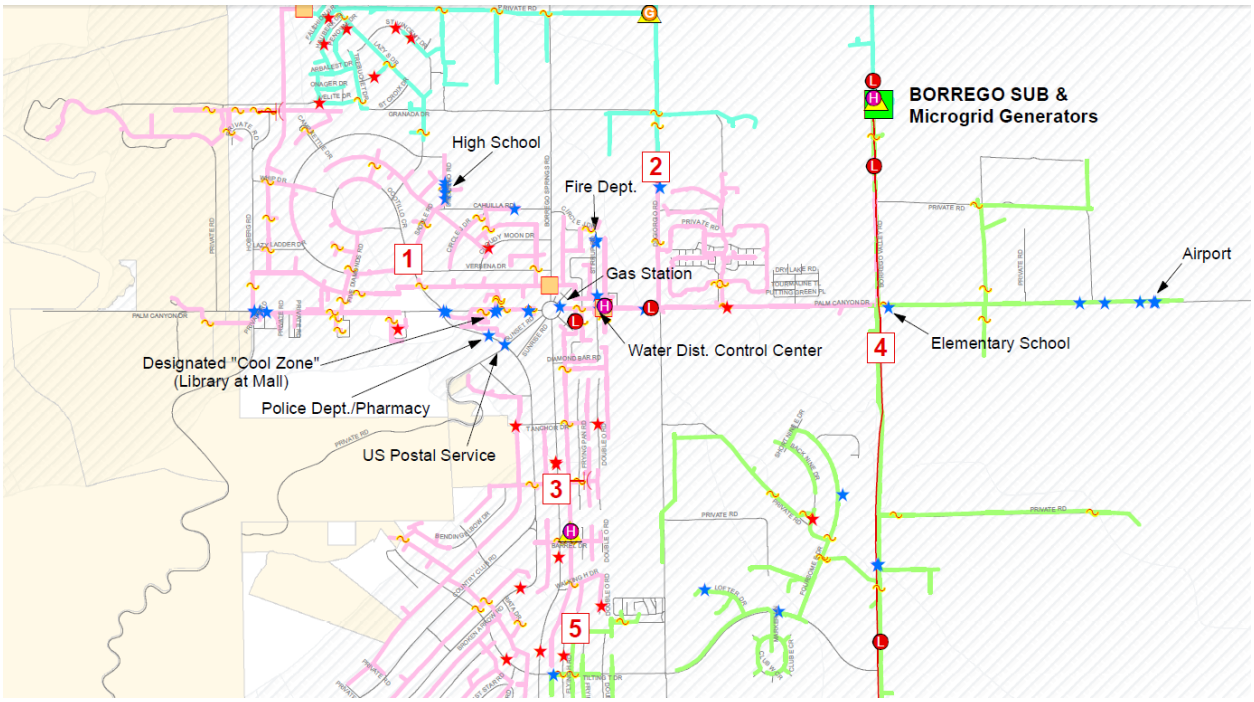

Source: San Diego Gas & Electric Company

Upgrade Protection and Permissions

The existing protection and permissions schemes were aimed at islanding only one circuit (Circuit 1) of the three circuits in Borrego Springs. These configurations and schemes required personnel onsite to manually operate the circuit breaker at the point of common coupling. Additionally, an outage was required to be undertaken to reconnect the tie-line with the substation. These limiting factors had to be upgraded to ensure all three microgrid circuits could seamlessly participate in the remote microgrid operations. The project team undertook the following efforts to upgrade the protection and permission schemes (Figure 27) including:

- Permissions to back feed generators to the dead 12 kV bus – Current permissions scheme were upgraded to allow for automated circuit breaker operation for energizing 12 kV bus.
- Synchronize to high-side of transformer – New protection relay panels and synchronizing potential transformers (PTs) were installed to enable seamless transition back from an island event, when the 69 kV transmission line is re-energized.
- Substation capacitor auto-disconnect – Additional controls were retrofit to existing substation capacitors as a preventive measure to mitigate operational issues while going into island operation. This will help automate transition to island and decrease manual operation of capacitors in the event of an outage.

Figure 27: Upgraded Protection and Permissions

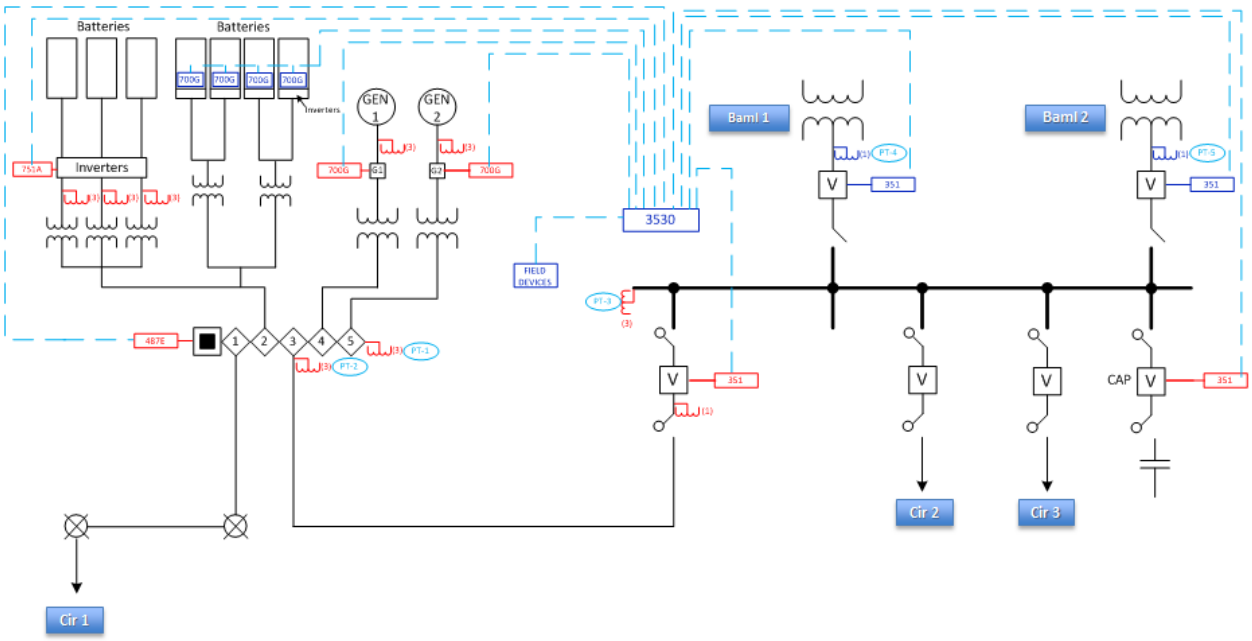

Source: San Diego Gas & Electric Company

Upgrade/Harden Circuits Harden Critical Stretch of Circuit 2

Borrego Springs lies in a desert climate and is known to be affected by extreme and adverse weather conditions due to high winds and flash floods. This has resulted in certain "weak points" in the existing electric infrastructure on the circuits. In addition, portions of the downtown area had been identified as a "cool zone" or critical site for residents, during excessive heat events and to maintain public safety. The project team undertook the following effort to upgrade/harden the circuits (Figure 28):

- Upgraded a section of the distribution line leading to the downtown area (cool zone) was from wooden to steel poles. This upgrade will allow for quicker re-energization to the downtown area during microgrid events.

Figure 28: Upgrade/Harden Circuits - Harden Critical Stretch of Circuit 2

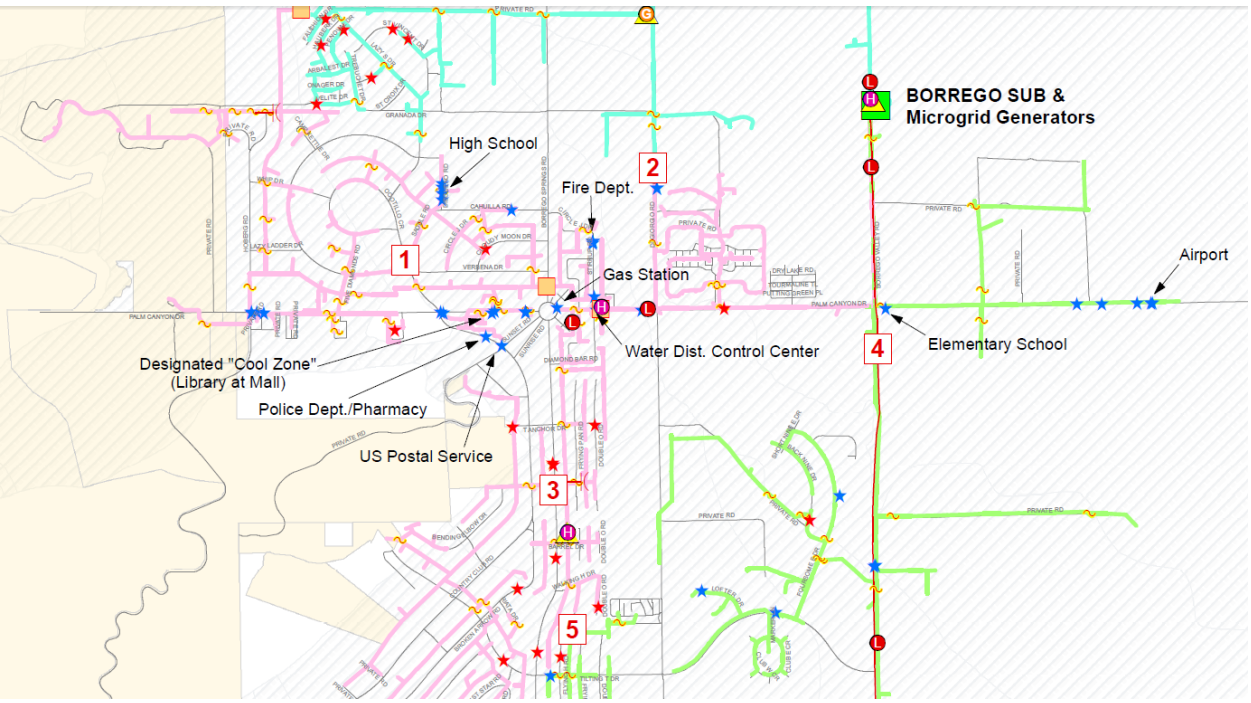

Source: San Diego Gas & Electric Company

Integration with Third-party Solar Facility

The Borrego Springs Microgrid includes one large 26 MW solar facility that can provide additional generation sources to the grid. An upgrade and retrofit of the current microgrid was required to be able to integrate the solar facility. The project team undertook the following efforts to integrate the solar facility:

- Upgrade and retrofit current microgrid – This will allow for islanding all three circuits (potentially islanding all customers of Borrego Springs) during microgrid operations.
- Modification of system protection schemes – Existing protection schemes were modified that allowed for energization of the 69 kV bus and thereby the 26 MW solar facility, which is directly connected to the 69 kV bus.

- Installation of equipment for communications and interface – Additional equipment was installed and new communication interfaces with the solar facility were developed to allow for communication between the solar facility and SDG&E as the DERMS microgrid operator.
- Grid and generation operating procedures were modified to allow for safe, reliable, and efficient operation of this new generation resource within the microgrid.

Integration with Local Resorts

The project team identified three local resorts in the "cool zone" that needed upgrades to its interconnection point with the grid. In response, the project team undertook the following efforts to integrate the three local resorts' interconnection point with the microgrid:

- Transfer switches and connections were created for mobile generator deployment.
- Additional staging areas were created for SDG&E crews during adverse weather conditions.
- This upgrade allowed for a safe staging area for life support/medical baseline customers to stay at these resorts during emergencies and electric grid outages.

Upgrades to Site Communications and Demonstration Support

An onsite controller that was installed during the last phase of the Energy Commission funded project (in 2013) only had backup power for at most four hours. The project team undertook the following efforts to upgrade site communications for support of the microgrid operation:

- Upgrade of communications infrastructure – Backup uninterruptable power systems were deployed for onsite controller operations. A field data concentrator was installed that communicates with the enterprise data concentrator thereby enabling microgrid operational data to be sent to the enterprise data historian in the SDG&E control center.
- Support for generator operations and annual source testing was undertaken for generator emissions compliance and operations.
- A new flood control fence was installed to maintain site security while maintaining site integrity during flash floods

Integration with Electric Distribution Operations

A key aspect of this microgrid project was integration of local microgrid operations with SDG&E's Electric Distribution Operations (EDO). EDO is responsible for operations of SDG&E's electric distribution system through its control center in San Diego. It was imperative to handover operations of the microgrid to EDO, through the installation of an advanced microgrid controller for asset management and operations. The project team undertook the following efforts to integrate with EDO:

- The microgrid project team created a plan to transition operation responsibilities over to EDO after successful testing of individual assets and overall testing of the microgrid during actual test operations.
- The microgrid resources were identified as additional assets to be used by EDO to effectively operate the grid during normal and abnormal situations.
- The integration with EDO will result in quicker response times for microgrid assets to respond to emergencies and electric grid outages.
- SDG&E is building a DERMS platform to integrate all DERs in its service territory. The AMC developed as part of this project integrated the microgrid assets with the DERMS operations. This also allowed for greater operational benefits to be realized with the microgrid assets.

Community Participation

SDG&E's team worked closely with several key community organizations, local leaders and schools in Borrego Springs to complete some important community projects, summarized below.

Critical Load Report

At the start of the project, the team engaged with the Borrego Springs Chamber of Commerce and key stakeholders to help define the area's critical infrastructure such as "cool zones", gas stations, grocery stores and restaurants. Following is the list of primary and secondary critical loads that were identified by the community stakeholders.

Primary Critical Loads

Emergency Operations Centers

1. San Diego County Sheriff's Department (Local CHP Office) shown in Figure 29.

Figure 29: San Diego County Sheriff's Department

Source: San Diego Gas & Electric Company

2. Borrego Springs Fire District (Figure 30).

Figure 30: Borrego Springs Fire District

3. Verizon Wireless FCC Tower (Located at the Fire Department)

Communications - Schools – Services – Shelters - +55 Adult Communities

4. AT&T – Communications
5. Borrego Liquefied Natural Gas (SDG&E)
6. Borrego Medical Clinic - Borrego Community Health Foundation
7. Borrego Pharmacy - Borrego Community Health Foundation
8. Borrego Springs Branch Library – Cool Zone
9. Borrego Springs Children's Center - Borrego Community Health Foundation
10. Borrego Springs Elementary School (Red Cross Overflow – Evac/Kitchen)
11. Borrego Springs High/Middle School (Red Cross Emergency Evacuation Shelter)
12. Borrego Springs Senior Center - Borrego Community Health Foundation
13. Borrego Valley Airport
14. Borrego Water District Office & Maintenance Shop
15. Borrego Water District - Treatment Plant
16. Borrego Water District – Country Club Tank
17. Borrego Water District – Booster Station 1
18. Borrego Water District – New Lift Station
19. Borrego Water District – Well #4
20. Bottle Shoppe & Gas Station
21. Cable - USA Communications - Emergency Info – Channel 3

22. Center Market
23. Desert Green Solar Farm - Invenergy
24. Desert Pantry Supermarket
25. Mountain View Cottages – 24/7 Assisted Living Facility (Adult 55+ Community)
26. NRG Solar Facility – connected to the microgrid
27. ProFlame / Petrolane - Propane Gas Service
28. Roadrunner Community (Trailer Park – Adult 55+ Community)
29. San Diego County Roads Field Station (Fuel – Sheriff, CHP & Fire)
30. Village Food & Fuel
31. Woolcott Dental - Borrego Community Health Foundation (Gordon Wimer, DDS)
32. X L Co Fuel

Secondary Critical Loads

33. Borrego Springs Chamber of Commerce & Visitor Center
34. True Value Hardware

Borrego Desert Energy Project

SDG&E worked closely with the Anza-Borrego Desert Natural History Association (ABDNHA)[2] to create a community energy education program. The goal was to educate, inspire, empower and motivate the community to create a "Clean Energy Future" by protecting the environment through conservation and sustainable practices. ABDNHA created a comprehensive campaign that included elements such as:

1. ABDNHA Garden, Outdoor Educational Displays – UV resistant professional interpretive displays located along a footpath and plaza within the ABDNHA Botanical Garden. A highlight included in the display, is a hand-crank example of how energy is made. A large monitor is located right next to the plaza displaying informational messages to the visitors.
2. BDEP / Monitor / Displays / Info – Digital monitors display BDEP info in ABDNHA's Library, with an additional monitor at the Borrego Springs Chamber of Commerce office foyer. ABDNHA develops the messages and graphics for these Digiboards, and they will continue to update until 2019. Messages include information concerning energy and the environment with a section about the Borrego Springs Microgrid.
3. Sustainability Tour – A self-guiding tour via automobile, bicycle, or online tour of selected locations in Borrego Springs that are examples of renewable energy and

[2] http://www.abdnha.org/energycenter/SustainableBorrego/index.html.

efficient use of resources. Available online and by a map is featured in the BDEP brochure.

4. Social Media – BDEP's information is also be highlight at a website and a Facebook page managed by ABDNHA. It is targeted towards children, parents, and teachers. The website features topics such as: Project Background, Understanding Energy, Sustainable Borrego, Energy & Nature, Energy for Kids (Kids Club) and Energy Tips.
5. STEM Educational Energy Programs & Events for Children – A hands-on energy program in the local Borrego Springs school system, and a web-based program, "Energy: Just for Kids" with activities and experiments that kids can do with their parents and teachers. Includes leadership training and energy career opportunities.
6. Collateral Materials – Letterhead, Brochure, tour map, educational materials, articles and more.
7. Press Releases – Were sent to local and regional print, television and cable entities, as well as the ABDNHA newsletter. The Borrego Sun carried a story about the ABDNHA center kick-off reception.
8. Ribbon Cutting / Grand Opening – Wed, Feb 28, 2018 – Attended by more than 75 community leaders, business owners, students and residents.

Community Events Outreach:

As part of the outreach effort and customer feedback survey, the SDG&E project team organized and/or participated in multiple events to engage the Borrego Springs community. These included:

- Borrego Energy Day – ABDNHA's local community forum with presentations by energy/topic experts. Featured information, speakers, lectures, tours, and other special activities.
- Borrego Days – An annual community event that spans 3 days with food, entertainment, booths, and events. Attendance is estimated at more than 45,000 guests per year.
    - SDG&E has sponsored this event for more than 10 years and has a double-booth to talk to the community about the local microgrid project and other services.
- Local Farmer's Market – Recruited survey participants and distributing information about the Borrego Springs Microgrid.
- Borrego Springs Chamber of Commerce – SDG&E provided a large monitor for their conference room to support their community meetings. This is in addition to the large monitor in the foyer the Chamber received from the Borrego Desert Energy Project.
- Borrego Springs Microgrid FAQ – Borrego Sun Newspaper – SDG&E ran a large article that featured important Frequently Asked Questions (FAQ's) and facts about the Borrego Springs Microgrid and outages. Ran in the Oct 19, 2017 edition.

- SDG&E NewsCenter – SDG&E has shared information about the Borrego Springs Microgrid through articles published on its NewsCenter (sdgenews.com), which is accessible to the public and the media. These articles are shared through SDG&E's social media channels, which include Twitter, Facebook, Instagram, Pinterest, and LinkedIn.

Planned Outage Communications

The project team reached out to the Borrego Springs customers informing them of the Energy Commission project testing with details that included dates, duration, and contact information for inquiries and emergencies. Letters were sent to impacted customers ahead of any project testing.

Borrego Springs Microgrid Awareness Survey

A simple awareness survey was created for the Borrego Springs Microgrid. 82 Borrego Springs part-time or full-time residents were recruited at two events (Tables 10-12):

- October 28, 2017 – Borrego Days event (49 customers responded to the survey)
- March 23, 2018 – Local Farmer's Market (33 customers responded to the survey)

Table 10: Survey Results – Total Respondents – All 82 Survey Participants

Answer	Question	1 Have you ever heard about SDG&E's Borrego Springs Microgrid?	2 What is your opinion of the Borrego Springs Microgrid?	3 Would you like to learn more about the Borrego Springs Microgrid and what it does for the local community?
Yes		48		57
No		34		25
1 (Highly beneficial to the community)			33	
2 (Somewhat beneficial to the community)			13	
3 (Not beneficial to the community)			3	
4 (Have no opinion about the microgrid)			6	
5 (Don't know anything about the microgrid)			27	

Source: San Diego Gas & Electric Company

Table 11: Total Respondents – 48 of 82 Survey Participants "who were aware of the microgrid"

Answer	Question	1 Have you ever heard about SDG&E's Borrego Springs Microgrid?	2 What is your opinion of the Borrego Springs Microgrid?	3 Would you like to learn more about the Borrego Springs Microgrid and what it does for the local community?
Yes		48		34
No				14
1 (Highly beneficial to the community)			26	
2 (Somewhat beneficial to the community)			12	
3 (Not beneficial to the community)			3	
4 (Have no opinion about the microgrid)			4	
5 (Don't know anything about the microgrid)			3	

Source: San Diego Gas & Electric Company

Table 12: Total Respondents – 34 out of 82 Survey Participants "who were NOT aware of the microgrid"

Answer	Question	1 Have you ever heard about SDG&E's Borrego Springs Microgrid?	2 What is your opinion of the Borrego Springs Microgrid?	3 Would you like to learn more about the Borrego Springs Microgrid and what it does for the local community?
Yes				23
No		34		11
1 (Highly beneficial to the community)			7	
2 (Somewhat beneficial to the community)			1	
3 (Not beneficial to the community)			0	
4 (Have no opinion about the microgrid)			2	
5 (Don't know anything about the microgrid)			24	

Source: San Diego Gas & Electric Company

Borrego Springs Microgrid - Customer Feedback Survey:

In addition to the Borrego Springs Microgrid Awareness Survey, SDG&E also conducted a more in-depth customer feedback survey. This gauged the customer experience with the usage of the Borrego Springs Microgrid, planned outages, communication methods and usage of cool zones. The survey was emailed on July 25, 2018, to all part-time and full-time residents. The results were not available at the time of the submission of this report but will be forwarded at a later date.

Laboratory Testing

This task included experimental setup for a laboratory-scale, proof-of-concept, hardware-in-the-loop (HIL) evaluation that was undertaken at NREL's Energy Systems Integration Facility (ESIF). This section presents the results of the evaluation of an advanced controller and advanced control functions for the Borrego Springs Microgrid through controller-hardware-in-the-loop (CHIL) and/or power hardware-in-the-loop (PHIL) simulations. It also describes the hardware-in-the-loop (HIL) test configuration, the functionalities tested, the test procedure, the test results, and the lessons learned. The HIL evaluation setup allowed realistic testing of the ability of these advanced controls to manage the microgrid operation under conditions that would be difficult or expensive to create in the actual system.

The evaluations were conducted in two phases, described below, and different scenarios were simulated for each phase:

- Phase 1: Evaluation of an advanced microgrid controller for Borrego Springs; for this phase of testing, the Spirae Wave microgrid controller, similar to that deployed at Borrego Springs, was used.
- Phase 2: Evaluation of advanced R&D microgrid control functions; for this phase of testing, an implementation of the OSISoft/UCSD R&D microgrid functions called advanced control technology (ACT) was used.

Evaluation of an Advanced Microgrid Controller

The purpose of HIL testing is to validate the AMC's ability to meet the following functional requirements described below:

- C1: Disconnection
- C2: Resynchronization and reconnection
- C3: Steady-state frequency range, voltage range, and power quality
- C4: Protection
- C5: Dispatch
- C6: Enhanced resilience

Functional Requirements for Microgrid Controller Evaluation

C1: Disconnection was evaluated by determining whether the microgrid disconnects from the utility when a voltage or frequency threshold is reached, and within the time specified, based on the thresholds provided in IEEE 1547.1-2005, Section 5.2 (voltage) and Section 5.3 (frequency) that are configured in the individual asset controller. Table 13 lists the voltage thresholds, and Table 14 lists the frequency thresholds.

Table 13: Voltage Thresholds Disconnection

Default Settings[a]		
Voltage Range (% of Base Voltage[b])	**Clearing Time (s)**	**Clearing Time: Adjustable Up to and Including (s)**
V < 45	0.16	0.16
45 ≤ V < 60	1	11
60 ≤ V < 88	2	21
110 < V < 120	1	13
V ≥ 120	0.16	0.16

[a] **Under mutual agreement between the electric power system and demand response operators, other static or dynamic voltage and clearing-time trip settings shall be permitted.**

[b] **Base voltages are the nominal system voltages stated in American National Standards Institute (2011, Table 1).**

Source: IEEE 2014, Table 1

Table 14: Frequency Thresholds for Disconnection

	Default Settings		Ranges of Adjustability	
Function	**Frequency (Hz)**	**Clearing Time (s)**	**Frequency (Hz)**	**Clearing Time: Adjustable Up to and Including (s)**
UF1	< 57	0.16	56–60	10
UF2	< 59.5	2	56–60	300
OF1	> 60.5	2	60–64	300
OF2	> 62	0.16	60–64	10

Source: IEEE 2014, Table 2

Testing was undertaken to determine whether the microgrid controller detects an unintentional island and ceases to energize the area electric power system by disconnecting the microgrid from the utility within 2 seconds of the formation of an island, as specified in IEEE 1547, Section 4.4.1. Unintentional islanding disconnection testing was conducted based on test procedures from IEEE 1547.1, Section 5.7, in which the intent is to perform testing when the unit under test exchanges power with the area electric power system at a level that is less than 2 percent of its nominal power rating.

C2: Resynchronization and reconnection was evaluated by determining whether reconnection occurs only when the area electric power system voltage is within Range B (0.95 per unit < V < 1.05 per unit) of American National Standards Institute Standard C84.1-2011; and the frequency

is in the range from 59.3 Hz–60.5 Hz (as defined by IEEE 1547-2003) at the individual asset controller. The reconnection was delayed for up to 5 minutes after the area electric power system steady-state voltage and frequency are restored to the ranges identified above. The delay time was tested by measuring the time between the presence of nominal conditions and the completion of reconnection.

The team further evaluated whether reconnection occurs only when the voltage, frequency, and voltage phase-angle differences are within the limits shown in Table 15, as defined by IEEE 1547-2003. The limits for a microgrid with a rating from 1.5 MVA–10 MVA was used.

Table 15: Difference Limits for Reconnection

Aggregate Rating of Demand Response Units (kVA)	Frequency Difference (Δf, Hz)	Voltage Difference (ΔV, %)	Phase Angle Difference (ΔΦ, °)
0–500	0.3	10	20
> 500–1,500	0.2	5	15
> 1,500–10,000	0.1	3	10

Source: IEEE 2014, Table 5

C3: Steady-state operation in islanded mode was evaluated by using measurements from sources and loads to determine whether the microgrid controller is able to maintain the voltage within Range B (0.95 per unit < V < 1.05 per unit) of American National Standards Institute C84.1-2011, and the frequency is within the range from 59.3 Hz–60.5 Hz.

C4: Protection was evaluated by simulating external and/or internal faults and determining whether the microgrid controller provides adequate control to serve and manage critical loads in both grid-connected and islanded modes of operation without triggering protective relays.

C5: Dispatch was evaluated by determining the microgrid controller's ability to dispatch resources to achieve survivability of critical loads when islanded, economic operation, and environmental performance compared to the outcomes for the community without the microgrid controller.

C6: Enhanced resilience was evaluated by validating that the microgrid controller is capable of managing the microgrid system effectively during contingencies with rapidly changing, weather-related, or other naturally occurring disruptive events.

Metrics for Advanced Microgrid Controller Evaluation

The metrics by which dispatch and resiliency were evaluated are described below.

Survivability of Critical Loads

The survivability metric will reflect whether sufficient resources (for example, generation and/or energy storage) are operating and available to support the microgrid's seamless transition to island mode, and it will be calculated as follows:

$$S_n = \frac{P_{loads,crit,n}}{P_{avail,n}}$$

where $P_{loads,crit,n}$ is the total active power of all loads that are identified as critical by the community and San Diego Gas & Electric during time step n, and $P_{avail,n}$ is the total power available from all dispatchable generation[3] during time step n. For energy storage systems, the calculation of $P_{avail,n}$ will consider the available state-of-charge of the batteries. The survivability metric should be less than 1 at all time steps.

Economic Operation

The cost of operating the microgrid for the duration of the scenario simulated, C, will be calculated as follows:

$$C = \sum_{N} P_{grid,n} \cdot \tau \cdot c_{grid,n} + \sum_{k} \left\{ \sum_{N} P_{DER,k,n} \cdot \tau \cdot c_{DER,k,n} \right\} + c_D \cdot \max\left(P_{grid,n} \cdot \tau\right)$$

where P_{grid} is the power supplied by the grid, c_{grid} is the cost of grid power, $P_{DER,k}$ is the power supplied by the kth DER resource within the microgrid, $c_{DER,k}$ is the cost of supplying power from the kth DER resource within the microgrid, c_D is the demand charge associated with grid power and τ is time step. The cost to operate the DER, $c_{DER,k}$ was assumed to be zero for PV and battery energy storage systems; and it was calculated based on representative efficiency data and fuel costs for the distributed generation resources.

Environmental Performance

The estimated carbon dioxide (CO_2) emissions associated with operating the microgrid for the duration of the scenario simulated, ϑ, will be calculated as follows:

$$\vartheta = \sum_{N} P_{grid,n} \cdot \tau \cdot \xi_e + \sum_{k} \left\{ \sum_{N} P_{DER,k,n} \cdot \tau \cdot \xi_g \right\}$$

where ξ_e is the electricity emissions factor for the grid, and ξ_g is the distributed generation resources emissions factor. Note that ξ_g is zero for photovoltaic (PV) systems and battery energy storage systems (BESSs). The electricity and gas emissions factors provided in Attachment 12 of PON-14-301 (California Energy Commission 2014) shown in Table 16, will be used for the grid.

Table 16: Emission Factors in Carbon Dioxide Equivalent

	Emissions Factor (CO_2e[a])	Emissions Factor (CO_2e[a])
Electricity	0.588 lbs/kWh saved	0.000283 metric tons/kWh
Gas	11.7 lbs/therm saved	0.0053 metric tons/therm

[a] **Carbon dioxide equivalent**

Source: California Energy Commission 2014

[3] For accelerated tests, only steady-state values that are achieved after assets have been dispatched for each time step are used.

Simulation Scenarios for Advanced Microgrid Controller Evaluation

To validate functional requirements C1–C6, the AMC was tested for the target community under four major scenarios as shown in Table 17:

- Scenario A: Operating the microgrid while connected to the utility
- Scenario B: Separating the microgrid from the utility
- Scenario C: Operating the microgrid while separated from the utility
- Scenario D: Connecting the microgrid to the utility

Table 17: Mapping Scenarios to Functional Requirements

Scenario Description	C1	C2	C3	C4	C5	C6
	Disconnection	Resynchronization and Reconnection	Steady-State	Protection	Dispatch	Enhanced Resilience
A. Operating While Connected to the Utility					X	
B. Separating from the Utility	X			X		
C. Operating While Separated from the Utility			X	X	X	X
D. Connecting to the Utility		X				

Hardware-In-Loop Test Setup for Advanced Microgrid Controller Evaluation

Three configurations of the experimental setup were developed:

1. ESIF local CHIL setup: The controller hardware at the ESIF is coupled to a model of Borrego Springs, which is run on the local real-time digital simulator (RTDS) at the ESIF.
2. ESIF local CHIL/PHIL setup: The scaled power hardware and controller hardware at the ESIF is coupled to a model of Borrego Springs, which is run on the local RTDS at the ESIF.
3. ESIF/ITF remote setup: The scaled power hardware and controller hardware at the ESIF is coupled with a model of Borrego Springs, which is run on a combination of the RTDS

at the ESIF and the RTDS at the Integrated Test Facility (ITF) facility at SDG&E, made possible by a remote connection between the two RTDS systems.

An RSCAD software model of the Borrego Springs Microgrid power system was provided to NREL for HIL simulations. This model includes the distribution lines, DERs, loads, and system protection devices that make up the microgrid. This model was configured to be executed in real time on four prior generation RTDS racks that consist of rack-mounted processor cards connected to a backplane. NREL had only two prior generation RTDS racks available at the start of the project and had to modify the model provided by SDG&E, including some simplifications to the circuit, to be able to execute the simulations. NREL acquired a Novacor RTDS rack with four activated cores during the project. With this upgrade, NREL was able to simulate a functionally equivalent model to the original RSCAD model of Borrego Springs using the Novacor rack and one prior generation RTDS rack. Many changes, especially to inputs and outputs, were required to compile the model on NREL's two racks, but the electric circuit is equivalent to the original model.

NREL's HIL evaluation platform can execute the model of the microgrid power system with time steps on the order of a hundred microseconds, monitor system behavior in real time, and store the data for post-processing. Data were collected during the HIL-based testing phase using software metering points inside the software microgrid system model. Physical oscilloscopes were used as the hardware for any diagnostic needs. Data were accumulated from the real-time simulation as a time series, collected for the duration of the test, stored in a structured file (for example, comma-separated values file), and organized according to test case name and a test run number for easy retrieval and analysis later.

A functional block diagram of the ESIF local CHIL setup is shown in Figure 31, and a similar diagram is shown of the ESIF local CHIL/PHIL setup in Figure 32 and the ESIF/ITF remote setup in Figure 33. The ESIF local CHIL setup shows a CHIL experiment with only the microgrid controller and the distributed generator controllers implemented in hardware. The other two setups show a CHIL/PHIL experiment with NRG's PV plant, one of the substation energy storage systems, and the distributed generation resource controllers implemented in hardware, along with the microgrid controller hardware. The physical test setup was located in the ESIF's Energy Storage Laboratory.

The ESIF local CHIL setup consists of RTDS racks and advanced microgrid controller very similar to that installed at Borrego Springs, distributed generator controllers, a data manager, and the hardware/software interfaces among the RTDSs and the controllers. The RTDSs also output signals to and receive inputs from the microgrid controller and distributed generator controllers in real time, providing for a closed-loop simulation of the microgrid controller and the microgrid power system. The Borrego Springs power distribution system has three distribution feeders – circuits 1, 2, and 3. The microgrid controller interacted transparently with both the hardware and virtual components of the PHIL model.

The ESIF local CHIL/PHIL setup consists of RTDS racks, the microgrid controller, a data manager, the distributed generation resource controllers, a battery inverter, a PV inverter, and the hardware/software interfaces among the RTDSs, controllers, and power hardware. The

RTDSs also output signals to and receive inputs from the microgrid controller, distributed generator controllers, battery inverter, and PV inverter in real time, providing for a closed-loop simulation of the microgrid controller and the microgrid power system. Closed-loop simulations were performed across a range of scenarios to evaluate the functional performance of the microgrid controller. NRG's PV plant and the non-grid-forming substation energy storage system (SESS) were represented by voltage and current-scaled power hardware. Whereas, the rest of the system was represented by virtual components implemented in an RTDS. The simulated distributed generation resources were interfaced with and controlled by hardware generator controllers. The Spirae microgrid controller interacted transparently with both the hardware and virtual components of the PHIL model. In Figure 32, the "V and I Scaling" block is used to interface the power hardware into the model. For the SESS inverter, the current measurements were scaled appropriately and injected into the controlled current source model. For the PV inverter, the current measurements and voltage feedback was used to calculate the real injected and reactive power injected or absorbed by the PV inverter into the grid simulator. These real and reactive power measurements were used to recreate a current sine wave, and this was injected into the model. This method of current injection was chosen to avoid any instability induced in the model due to direct injection of current signal into the model.

The ESIF/ITF remote setup is similar to the ESIF local CHIL/PHIL setup, except that the scaled power hardware and controller hardware at the ESIF is coupled with a model of Borrego Springs that is run on a combination of the RTDS at the ESIF and the RTDS at the SDG&E ITF, made possible by a remote connection between the two RTDS systems (Figure 33). The Gigabit Transceiver Network Interface (or GTNET) cards of the RTDS were used to enable the remote connectivity between the RTDS at ESIF and the RTDS at ITF. The remote connection uses transmission control protocol (or TCP)-based communication between the GTNET cards at the two locations through a secure virtual private network (or VPN) tunnel. Because of communication latencies between the ESIF and ITF, the remote setup will introduce modeling inaccuracies and will not be able to represent fast dynamics across the entire microgrid. This is expected to have a significant impact when testing is performed that is associated with transitions between grid-connected and islanded modes.

Table 18 specifies the hardware components that were used to implement each of the functional blocks of the HIL configuration along with their hardware ratings. The SMA PV inverter is the same model and has the same firmware and settings as those used at NRG's PV plant. The PV inverter is compliant with the IEEE Standard 1547, but the settings allow a wider voltage and frequency tolerance. The Schneider battery inverter is representative of the battery inverters used at Borrego Springs, but it is not the same model.

Figure 31: Borrego Springs ESIF local CHIL setup

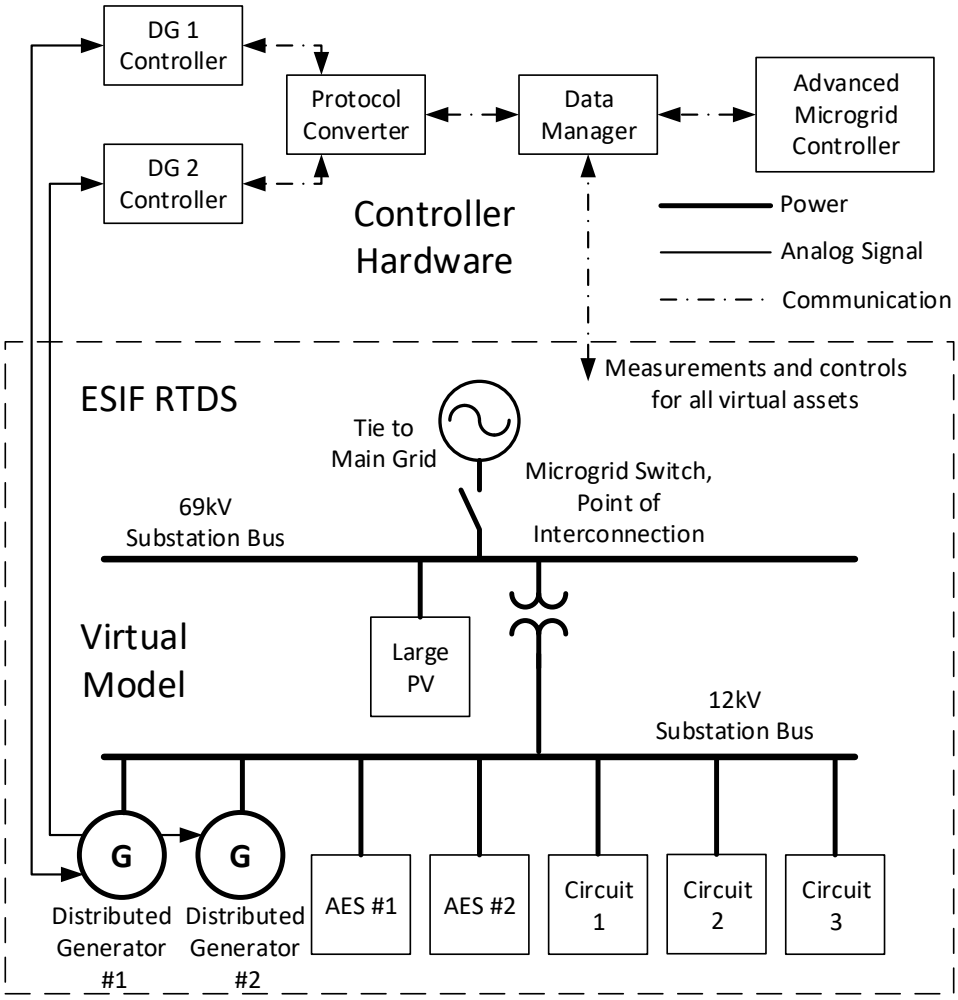

Source: San Diego Gas & Electric Company

Figure 32: Borrego Springs ESIF local CHIL/PHIL setup

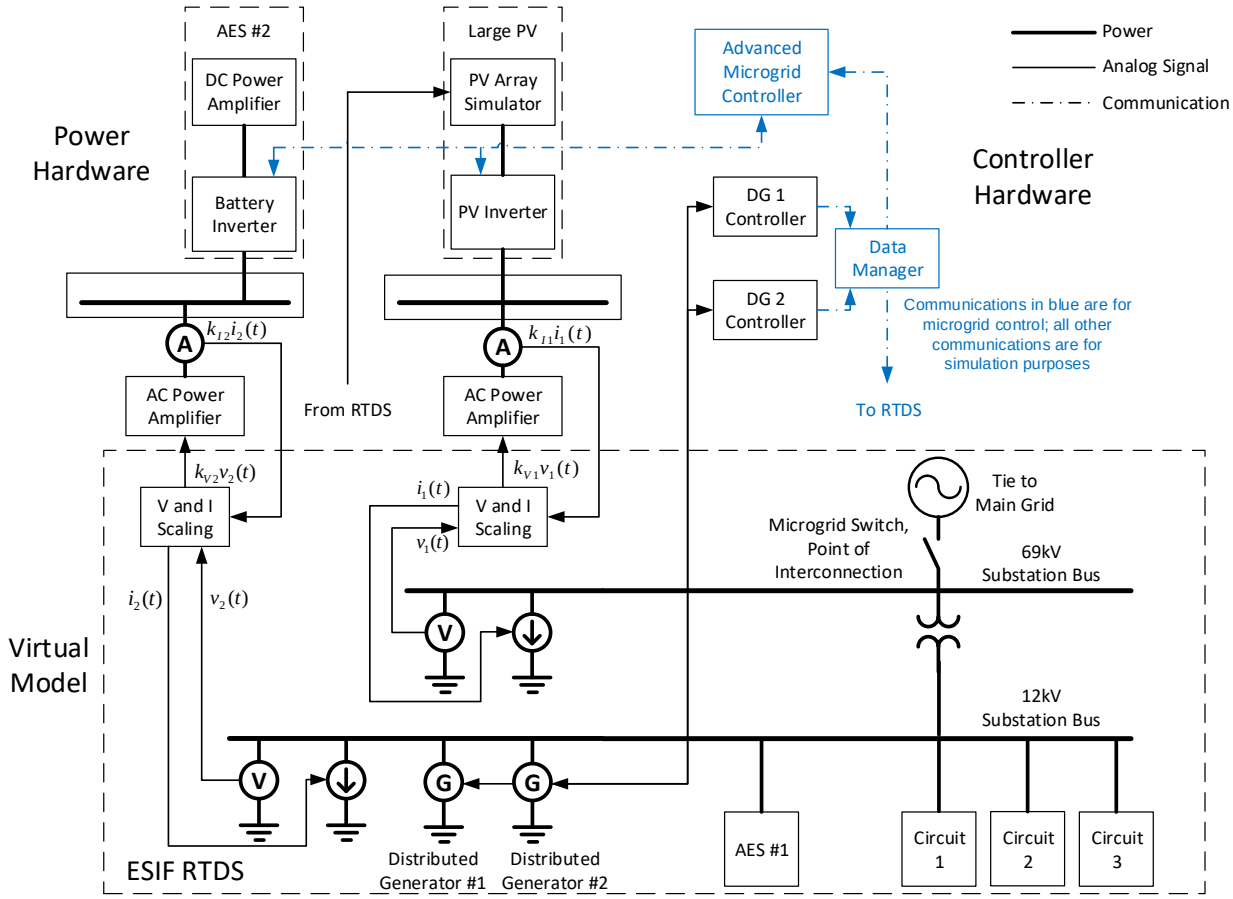

Source: San Diego Gas & Electric Company

Figure 33: Borrego Springs ESIF/ITF Remote Setup

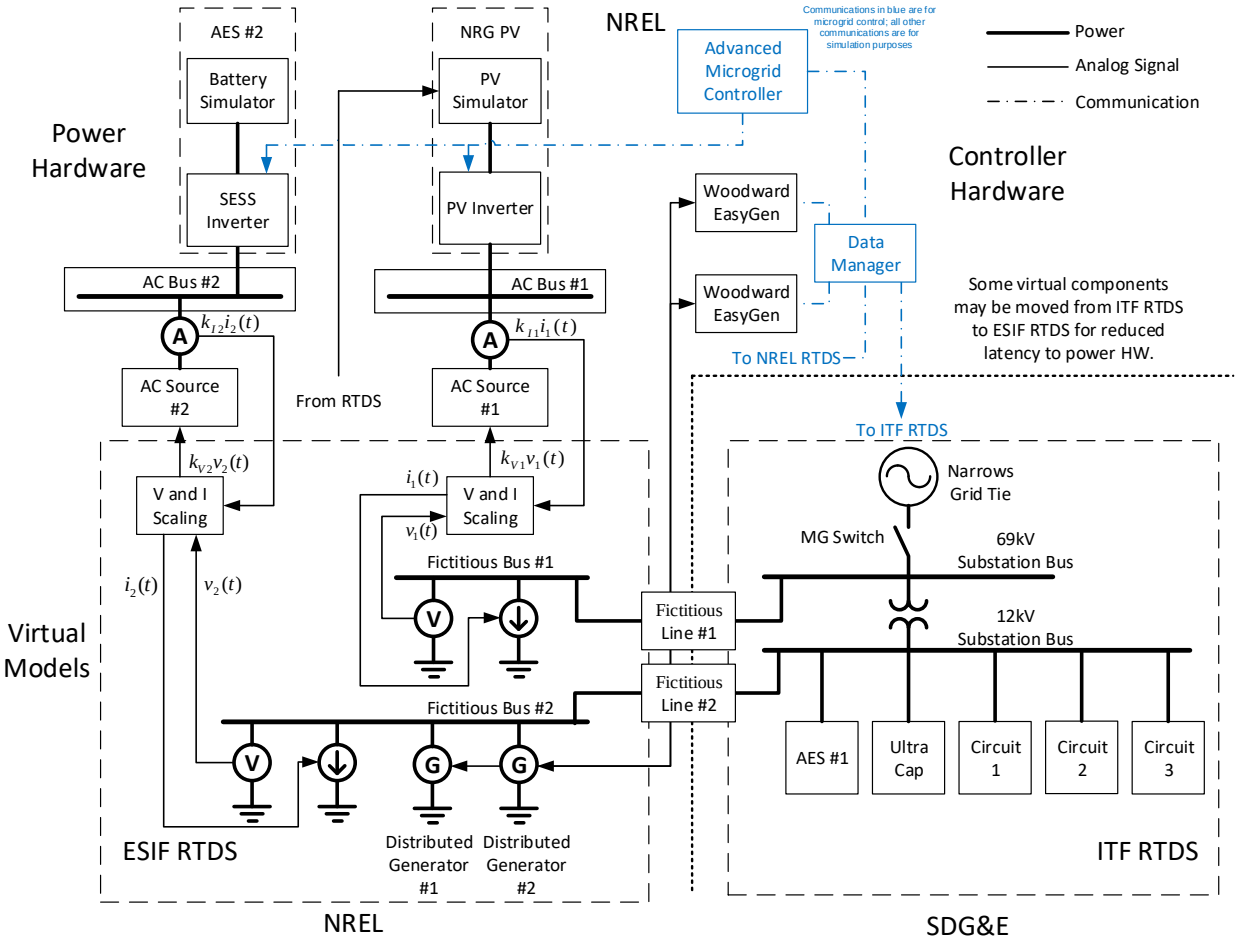

Source: San Diego Gas & Electric Company

Table 18: Hardware-in-the-Loop Hardware Component Selections

Functional Component	Manufacturer	Part #	Ratings
Controllable AC Sources/Sinks	Ametek	RS540 (x 2)	540 kVA each, bidirectional, 0–600 VAC
Controllable DC Source/Sink	Anderson	AC2660P	660 kW bidirectional, 0–1,000 V DC
BESS Inverter	Schneider	Conext Core XC 540	540 kVA bidirectional, 300 V AC, 440–885 V DC
BESS Transformer	Square D	540 kVA	300 V Wye/480 Delta, 7.4% Impedance
PCC[a] Bus	NREL	REDB (x 2)	0–600 V AC, 0–1,600 A
Controllable DC Source	Magna Power	MT 1500 kW (250 kW x 6)	1,500 kW, 0–1,000 V DC
PV Inverter	SMA	Sunny Central 500CP-US	550 kVA, 270 V AC, 430–820 V DC
PV Inverter Transformer	Eaton	550 kVA	270 Wye/480 Delta, 5.74% Impedance
Simulation Computer	RTDS	Rack system (x 2)	4 Novacor processors and 6 PB5 processors
Distributed Generator Controller	Woodward	Easygen 3000 series	Control distributed generators during grid connected and islanded operation
Data Manager	Eaton Cybectec	SMP Gateway automation platform	Compatible with DNP3, MODBUS, and PMU[b] protocol

Source: San Diego Gas & Electric Company

The AMC platform was used to execute all of the control software necessary to manage the controllable assets within the microgrid. The AMC was coupled with the RTDS that simulated the microgrid's electricity distribution system through a data manager, the Cybectec Gateway, as shown in Figure 34. The RTDS solved the model of the feeder in real time and generated measurement signals as if it were the actual facility electricity distribution system. These measurement signals were received by the AMC, which acted on them and produced control commands for the facility's controllable devices, thus closing the control loop in real time as if it were connected to the real facility. The Cybectec Gateway provided unique Internet Protocol addresses for each controlled asset to the AMC platform, and it translated or concentrated data from Distributed Network Protocol (or DNP3) (used by Spirae's multiple energy resource managers [or ERMs]) to MODBUS or DNP3 (used by DER controllers and the RTDS) as necessary. The data manager acts as a server to the Spirae Wave's DNP3 clients and as a client for the RTDS servers. A software pass through in the data manager pushes data between the energy resource managers in the AMC and the RTDS. Information such as the circuit breaker status, voltage RMS, frequency, real power, and reactive power are sent from RTDS to Wave. Control commands such as open/close breaker, real and reactive power set points were sent to RTDS

from Wave through the pass-through software. The data manager also translates control commands for the DERs (PV, battery, and distributed generation resources) modeled in CHIL and PHIL (Figure 34).

Figure 34: Connection of AMC to the RTDS through a data manager

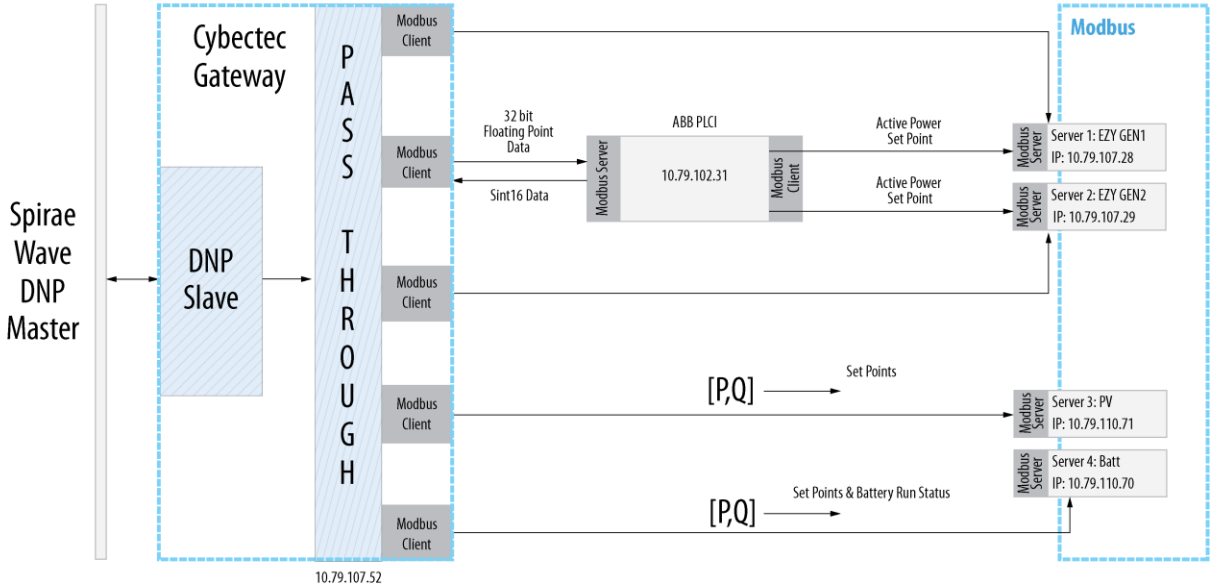

Source: San Diego Gas & Electric Company

Input Data for Advanced Microgrid Controller Evaluation

Net load profiles were based on data supplied by SDG&E for all three feeders within the Borrego Springs community for 2014. These net load data include about 3 MW of rooftop solar capacity and a 6.5 MW concentrated solar PV plant located on circuit 2 and this results in negative power flow on circuit 2 during the day. Because only feeder-level data was available, the same load profile is applied to all loads on a specific feeder but scaled according to the static loads that were supplied as part of the SDG&E RSCAD model. NREL selected three days to use for simulations:

1. Heavy load profile with a peak load of 10.5 MW/4.1 MVAr on July 29, 2014, shown in Figure 35.
2. Light load profile with a peak load of 5 MW/1.4 MVAr on January 24, 2014, shown in Figure 36.
3. Significant loss of PV generation due to drop in solar insolation, from 700 W/m2 to 90 W/m2 in 10 minutes (used to evaluate enhanced resiliency) on June 30, 2014, shown in Figure 37.

Figure 35: Load and Solar Insolation Profiles for Heavy Load on July 29, 2014

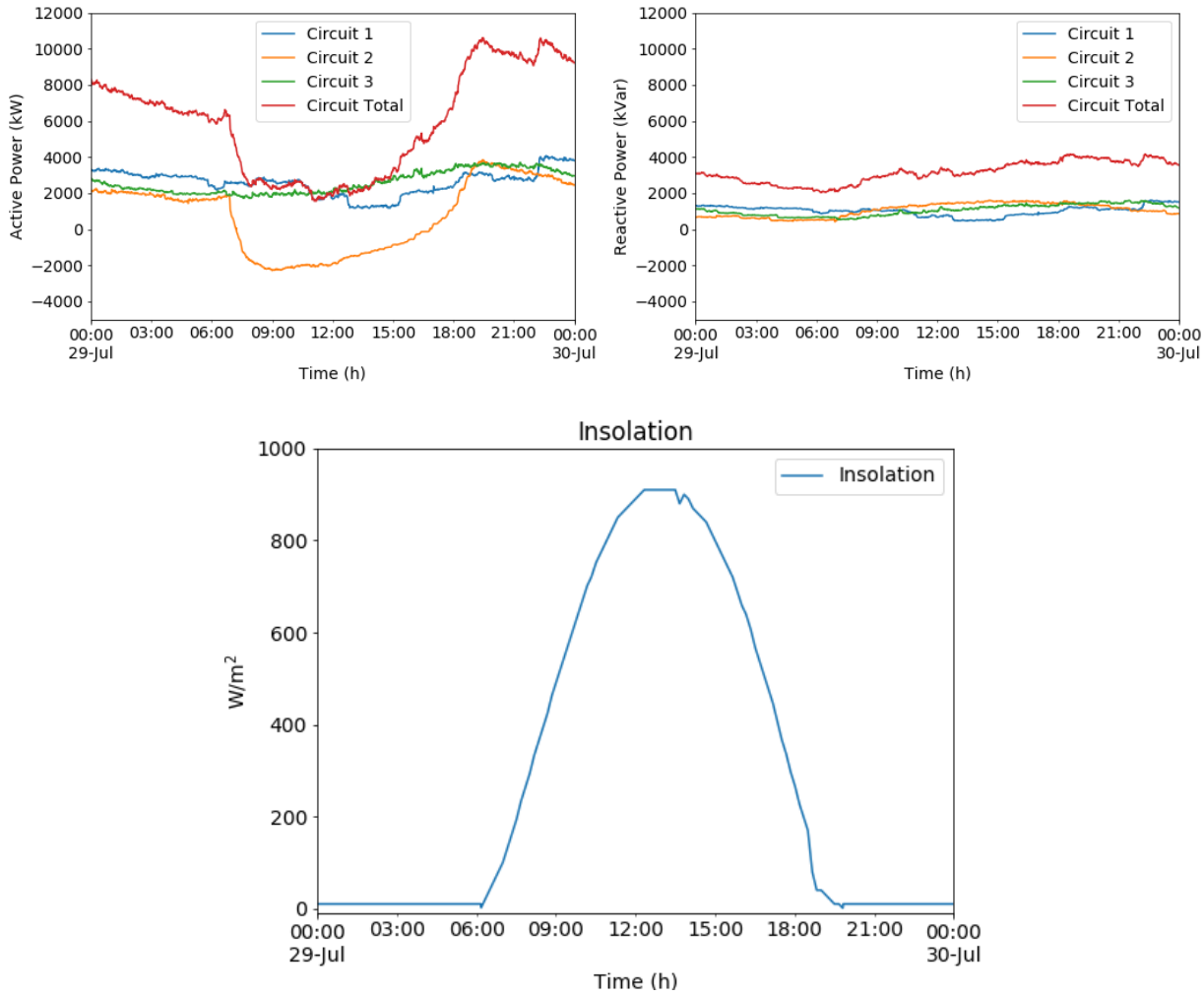

Source: San Diego Gas & Electric Company

Figure 36: Load and Solar Insolation Profiles for Light Load on January 24, 2014

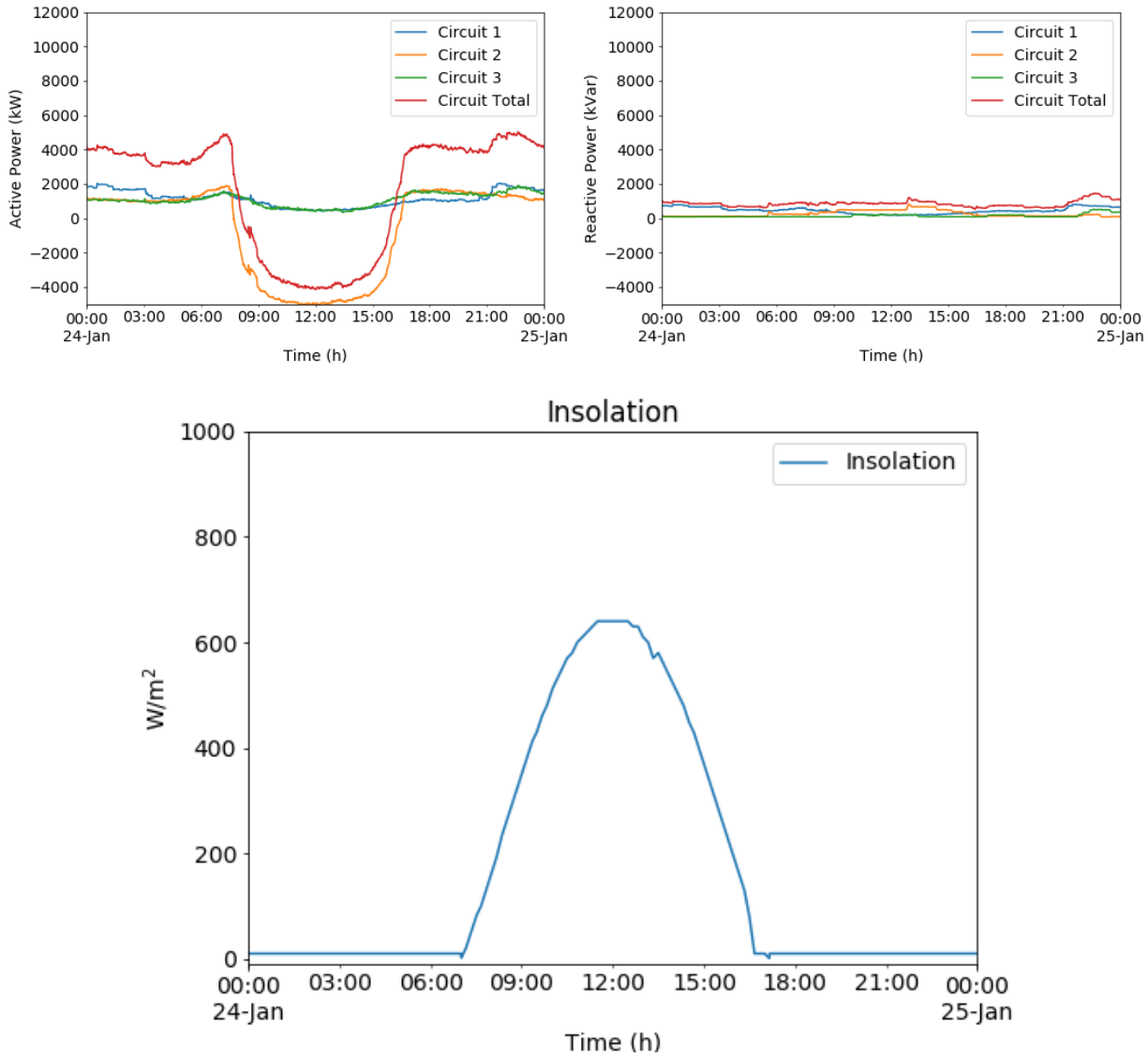

Source: San Diego Gas & Electric Company

Figure 37: Load and Solar Insolation Profiles for Evaluating Enhanced Resiliency on June 30, 2014

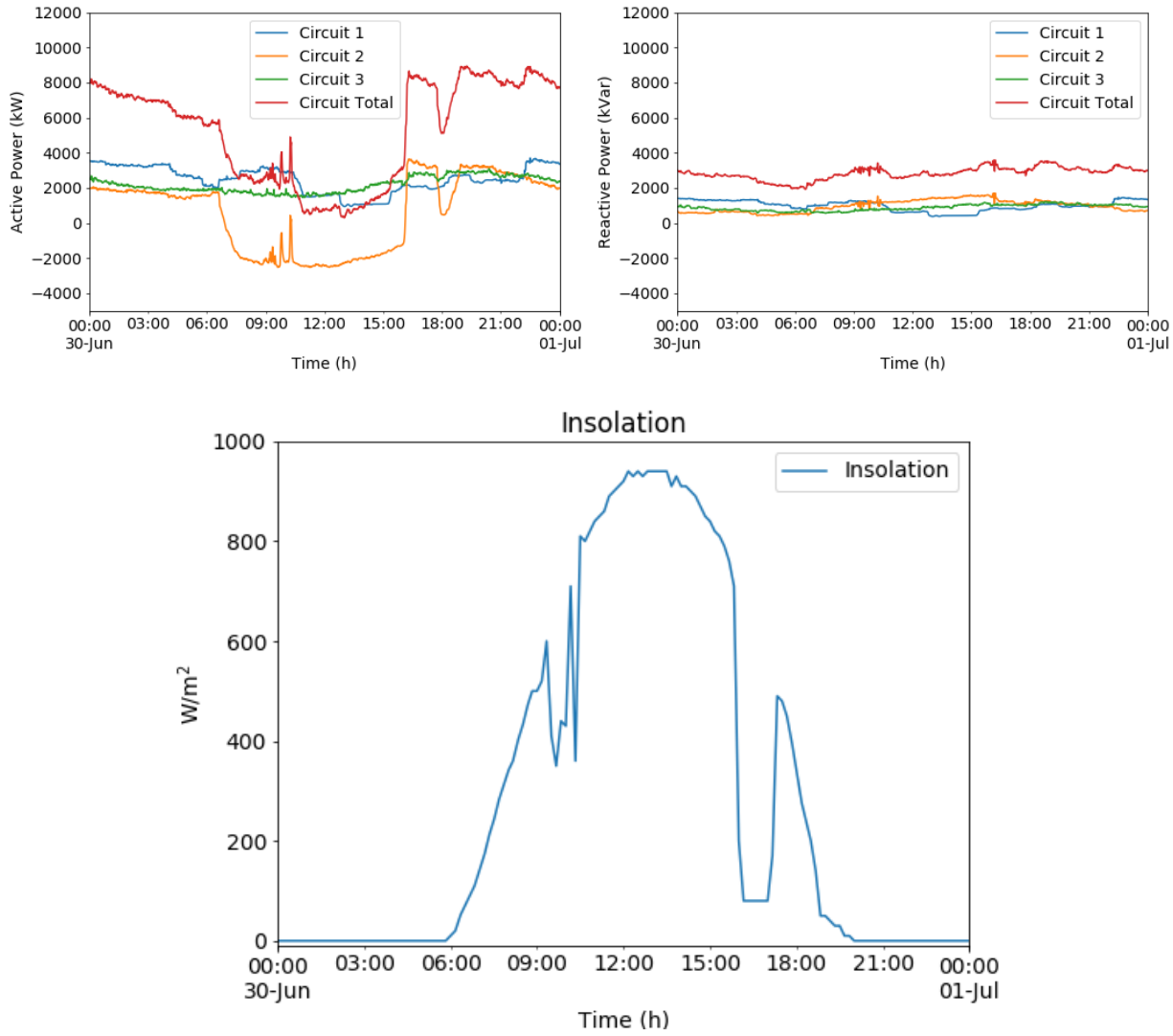

Source: San Diego Gas & Electric Company

All load data were provided at 1-minute time steps. For 24-hour dispatch tests, NREL down-sampled the 1-minute data by calculating the average power to arrive at 10-minute data sets.

Insolation data is from the Anza Borrego Desert Research Center database, which provides data on a 10-minute basis. This insolation data was fed to a PV panel model inside the RTDS to model the panels at the NRG PV plant in the Borrego Springs Microgrid.

Collecting Data for Microgrid Controller Evaluation

Table 19 summarizes the data the project team collected to evaluate the microgrid controller's functional requirements. All data were collected from the RTDS using standard measurement blocks provided by RTDS as part of their RSCAD software. The types of data that were collected include voltage, current, power, energy, frequency, and phase angle. The voltage/current

waveforms were captured at 1,000 Hz. Other data were captured at a rate of 100 Hz, which refers to the rate at which NREL read the values from the RTDSs. Root mean square (RMS) values were collected using single-phase and three-phase RMS meters that calculate the RMS value over a half cycle. Frequency data were collected from single-phase frequency meters that use a phase-locked loop (PLL) method with the nominal frequency set to 60 Hz. The meters are updated at every time step, but data were collected at a rate of 100 Hz. Phase-angle data were collected from three-phase phase-angle difference meters. Real and reactive power measurements were collected from three-phase power meters. Battery state-of-charge data were collected from a custom model within the RTDS that estimates the state-of-charge based on a charge-counting approach.

Table 19: Measured Quantities

Description of Measured Quantity	Rate	Scenarios			
		A	B	C	D
P&Q[a] on microgrid side of microgrid switch	100 Hz	X	X		X
P&Q for all critical loads	100 Hz	X		X	
P&Q for all DERs [c]	100 Hz	X		X	
State-of-charge of batteries	100 Hz	X		X	
RMS voltage at utility PCC [b]	100 Hz		X		X
Frequency at utility PCC [b]	100 Hz		X		X
Voltage phase angle at utility PCC [b]	100 Hz		X		X
RMS voltage on microgrid side of microgrid switch	100 Hz		X	X	X
Frequency on microgrid side of microgrid switch	100 Hz		X	X	X
Voltage phase angle on microgrid side of microgrid switch	100 Hz		X		X
RMS current on microgrid side of microgrid switch	100 Hz		X		X
Voltage waveform at utility PCC [b]	1,000 Hz		X		X
Voltage waveform on microgrid side of microgrid switch	1,000 Hz		X		X
Current waveform on microgrid side of microgrid switch	1,000 Hz		X		X

Source: San Diego Gas & Electric Company

Achieving Safe, Stable, and Accurate Simulations

The CHIL/PHIL test bed is very complex and challenging to operate due to the integration of multiple pieces of power hardware (two inverters with 500 kVA each combining to reach 1 MVA power hardware capability) and controller hardware (generator controllers, microgrid controller). The two power hardware inverters are connected at different locations in the microgrid, but there is interaction between them due to the high penetration of PV incorporated in the HIL. The dynamics involved in this test bed is complex due to fundamental power-

electronic-based power system behavior (such as interactive dynamics between parallel inverters) and also due to PHIL-related dynamics (for example changing grid impedance and voltage at the PCC based on whether the microgrid is grid-connected or islanded). Essentially, the grid impedance observed at these two power hardware devices is variable and thus the stability of the setup is variable and not guaranteed at all operating points. For example, when one power hardware device successfully operates in a closed-loop PHIL simulation, connecting another power hardware device instantaneously changes the impedance of the real-time system model. This may cause significant transients (overshoot or oscillation) or even affect the stability of the whole test bed. Because the impedance of the inverter hardware depends on its output apparent power, the stability margin of operation (PQ operating range) should be defined to ensure safe operation and prevent hardware damage caused by instability. This will be done in future work.

An open loop transfer function was formulated to evaluate the stability using the Nyquist criterion (Ainsworth et al. 2016). However, this does not guarantee a reliable stability analysis for two reasons: 1) the nonlinear characteristic of the power amplifier and the inverter (both are switched mode converters) cannot be completely characterized by a linear approximation and this results in inaccurate transfer function models and thus inaccurate analysis and evaluation, and 2) the integrated PHIL test setup with two inverters is a multi-input, multi-output control system and using a single-input single-output open loop transfer function for stability evaluation may no longer be valid and theoretically sound. Thus, the stability evaluation using the conventional open loop transfer function can only be used as an estimation of system stability behavior and a more thorough stability analysis must be addressed in future work.

Test procedures were developed in addition to improved overvoltage protection and over frequency and under frequency protection for the grid simulators to safely operate the grid simulator and run the experiments. This helped reduce the outage time of grid simulators and resulted in more grid simulator operational time. The test procedures define the sequence of actions to start and shut down the test bed in a safe manner to avoid unwanted transients and instabilities. They are published in IEEE (Wang et al. 2018).

Evaluation of Advanced Research and Development Microgrid Control Functions

Simulation Scenarios for Evaluation of Advanced Research and Development Microgrid Control Functions

The simulation scenarios for evaluation of the OSISoft/UCSD hardware implementation of advanced R&D microgrid control functions, called ACT, are focused on the real and reactive power tracking and disturbance mitigation at the PCC. Islanding, resynchronization, and islanding under abnormal condition cases were not simulated for evaluating ACT.

Hardware-in-the-Loop Test Setup for Evaluation of Advanced Research and Development Microgrid Control Functions

ACT enables fast precision feedback control of power grid voltage and frequency using phasor measurement unit (PMU) data (also known as a synchrophasor). This approach reduces the variations in voltage and frequency that can negatively affect power quality especially in systems with highly variable renewable energy sources, low inertia, or weak grids. By commanding power dispatch of DERs, the ACT can manage the ramp rate or hold power flow steady/fixed at a desired point, despite high variations in load and generation. The ACT includes data management to handle large volumes of PMU data, configuration tools to generate a model (which can also be imported if the file is already available), and decoupled (voltage, phase) control of "state of the grid" using PMU angle information.

For testing the ACT controller, the test setup shown in Figure 38 was used. The ACT was coupled through a remote connection to an RSCAD model of Borrego Springs, which was run on the local RTDS at the ESIF. The RSCAD model was the same as that used for the evaluation of the Wave microgrid controller. Seven simulated PMUs were added to the RSCAD model to provide data to the ACT at a rate of 10 Hz. The ACT communicated set points to the PV inverter, battery inverter, and distributed generators in the RSCAD model through MODBUS at a rate of 10 Hz.

Figure 38: Borrego Springs Test Setup for Evaluation of Advanced R&D Control Functions

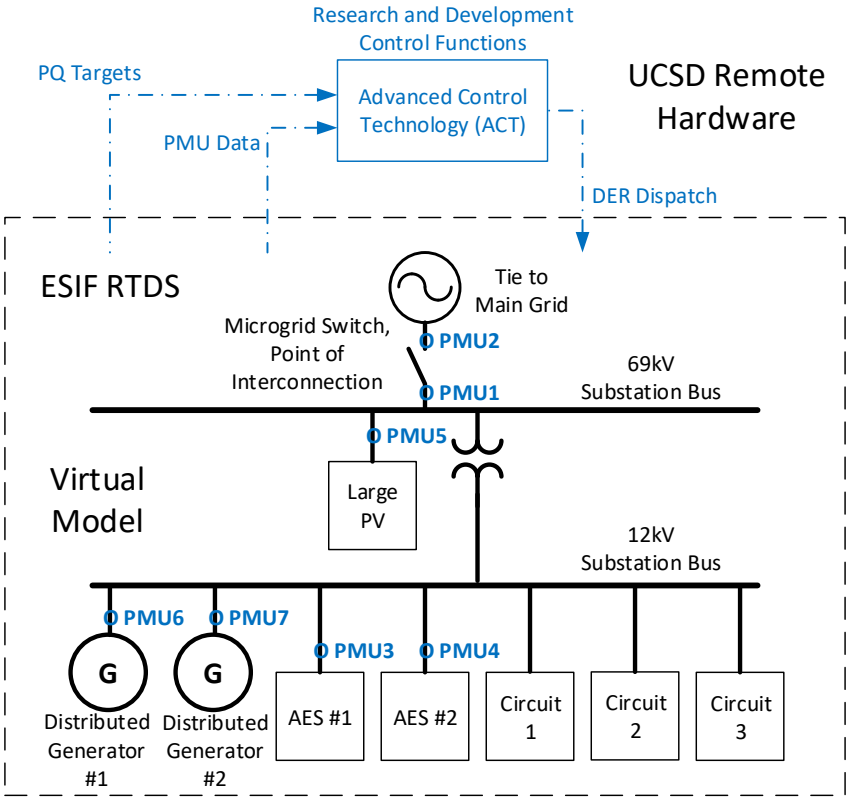

Source: San Diego Gas & Electric Company

Collecting Data for Evaluation of Advanced Research and Development Microgrid Control Functions

In addition to collecting data, the MODBUS control commands sent from the ACT were also stored. Appendix A presents the results of advanced microgrid controller evaluation. Appendix B presents the results of advanced microgrid R&D control functions evaluation.

Operational Testing and Demonstrations

Subsequent to the laboratory testing conducted at NREL, the project team conducted testing and demonstrations of the microgrid operation in two phases; 1) microgrid asset testing with a load bank, and 2) island testing. These tests were sequential to learn from the load bank testing prior to island testing on all the three microgrid circuits with real customers.

Operational Testing with Load Bank

This task addressed the individual testing of assets with the load bank at the microgrid yard. The objective of these tests was to quantify the contributions of individual assets to the microgrid operation. A component of the task was to compare the results from individual asset operation to the baseline to determine relative improvements in load reduction at the microgrid PCC, integration of renewable resources, and to evaluate the improvement in circuit reliability consistent with the objectives of the project. In addition, data collected from the tests was used to validate the operational efficiency of the assets under varying load conditions and to compare actual efficiency to the manufacturer's published performance curves.

The project team undertook preliminary load bank testing with individual resources on the following dates:

- April 11, 12, 13, 14 2017
- April 17, 18, 19, 20, 21 2017
- June 21, 22, 23 2017
- September 21, 22, 25, 26, 2017
- February 27, 28 2018

The two distributed generation resources (GEN 1, GEN2) and one energy storage unit (AES2) were used for these demonstrations along with the load bank. The tests included single distributed generator operation for individual timeslots on the dates mentioned above.

Island Testing

The objective of this task was to build on the individual asset testing undertaken with load banks to integrate various microgrid resources and operate them to achieve optimization of the resources on the microgrid circuits. Island testing was undertaken by using the AMC functionality of the DERMS platform, and integration with Electric Distribution Operations to monitor and control the tests remotely from the SDG&E control center. SDG&E project team members were present onsite for support and local operations as required.

When appropriate, SDG&E reached out to the Borrego Springs customers through advance notification and indicated time slots through which testing was going to be undertaken. The team also made alternative plans for handling contingencies and switching the circuit operation to grid mode, if the need arose. Key activities for undertaking these island tests included:

- Developing operational plans to support the operation plans
- Operation of the microgrid resources in the prescribed modes of operation
- Operation of the microgrid resources using the Advanced Microgrid Controller
- Data collection
- Data Analysis

Figure 39 presents a schematic of the microgrid circuits at Borrego along with the various assets that are deployed for the Borrego Springs Microgrid project. Island testing was undertaken with multiple microgrid resources in operation depending on the test objective.

Figure 39: Microgrid Circuits at Borrego

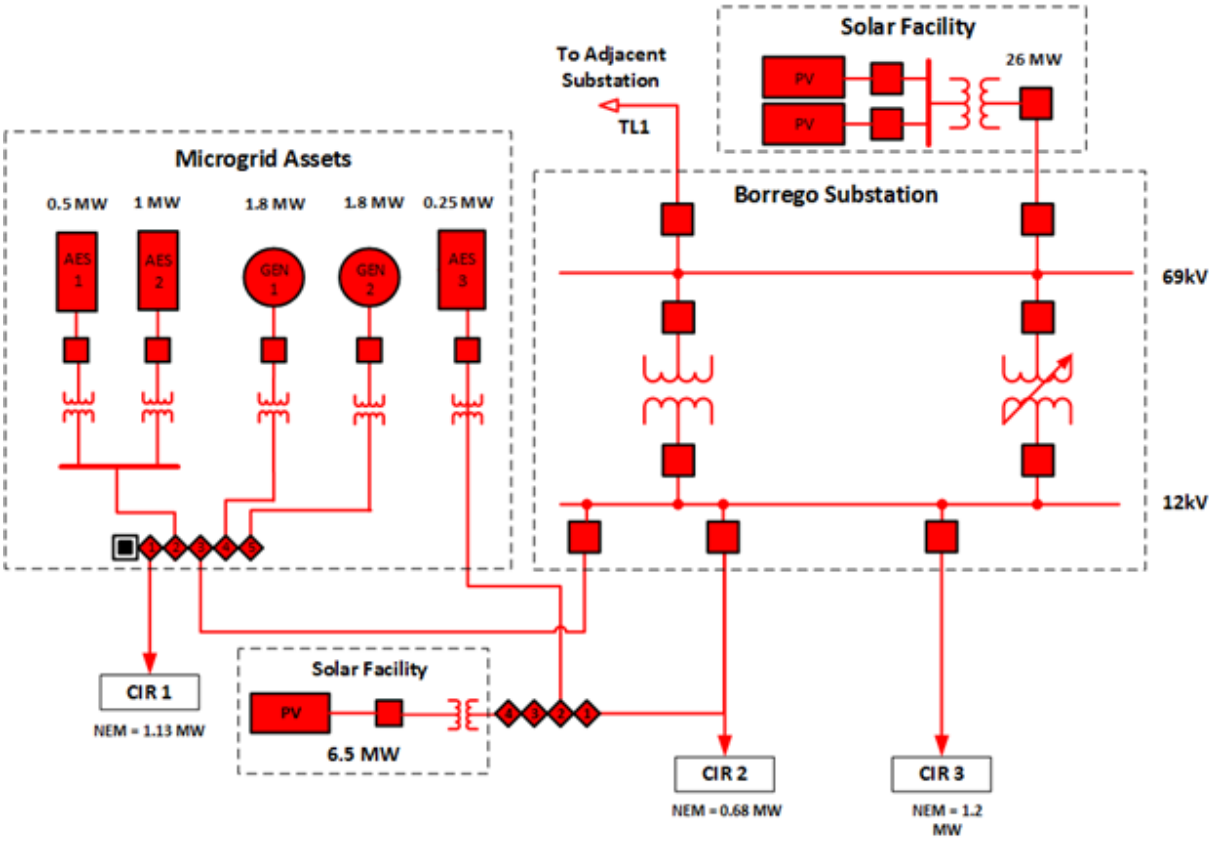

Source: San Diego Gas & Electric Company

The following island tests were undertaken to demonstrate the objectives of the project:

- Island Test #1 – Island Circuit 1

    - This test included the islanding of Circuit 1 with individual resources to test the functionality and operation using the AMC. This test was undertaken in two phases; a) first phase included day time testing with microgrid resources and a load bank, and b) second phase included day time testing with microgrid resources and load bank on Circuit 1.
- Island Test #2 – Island Circuits 1, 2, & 3 with opening of 12 kV Breaker
    - This test included the islanding of Circuits 1, 2, & 3 with individual resources and customer load by opening the transformer 12 kV breaker for Circuit 1, 2, & 3, and testing the functionality and operation of the microgrid (with real customers) using the AMC. This test was also undertaken in two phases with testing during night time and testing during day time.
- Island Test #3 – Island Borrego Springs with Maximum Renewable Energy Deployed within the microgrid
    - This test included the islanding of all three circuits of Borrego Springs and using the 26 MW PV plant by opening the breaker on the 69 kV side and using the microgrid resources to provide energy to the customers[4]. This test was undertaken during day time to incorporate real life operational scenario of islanding the entire community of Borrego Springs with local renewable microgrid resources and controls through the AMC.

The three island tests with AMC integration were undertaken on the following dates:

- Island #1 Operations
    - April 11, 12, 13, 14 2017
- Island #2 Operations
    - October 4, 2017 (Night time testing)
    - March 6, 2018 (Day time testing)
    - May 15, 2018 (Day time operations)
- Island #3 Operation
    - March 7, 2018
    - Summer/Fall 2018 (Additional island testing will continue after Energy Commission project ends)

When appropriate, SDG&E gave Borrego Springs customers advanced notice of these test dates. The project team also made alternate arrangements to manage contingencies, if the demonstrations did not go as planned.

Chapter 4 describes the island test procedures and outcome from the demonstrations.

[4] Not all 26 MW are used by the microgrid, the load will dictate how much power is needed from the NRG plant.

CHAPTER 4:
Island Testing and Demonstrations

The project team planned and carried out the island tests iteratively to support the overall project objectives in support of microgrid operations. Testing and demonstrations were conducted on three separate occasions between April 2017 and March 2018. The demonstration involved operation of the microgrid resources under various scenarios. These demonstrations were planned to test the fundamental operation of the resources in various modes of operation to achieve specific project objectives. This section presents the approach, observations and key findings that illustrate the ability of the microgrid to meet overall projective objective of islanding the entire community of Borrego Springs and an attempt to use renewable local resources to supply 100 percent of the community's load.

Island 1 Test

Objective

The primary objective of island 1 test was to island Circuit 1 with individual resources and a load bank to test the functionality and operation using the AMC. These tests were conducted during day time operations on multiple occasions.

Method

Figure 40 shows the microgrid resources that were used in the island 1 test. Only one of the two distributed power generators (GEN 1 and GEN 2) and one of the energy storage systems (AES 2) were used to carry the islanded Circuit 1. The circuit breakers that are greyed out indicate open circuit on the other two feeders. This island did not affect real customers as the island operation on Circuit 1 was tested with the load bank.

Table 20 describe in detail the operational procedures that were undertaken in support of island test #1.

Observations

Island 1 Test observations using microgrid resources (DG and AES) and load bank was demonstrated successfully by remotely controlling the microgrid resource using the AMC.
Source: San Diego Gas & Electric Company

Figure 41 presents a summary of the island demonstration on February 28, 2018. This island demonstration was run during day time between 8:30 am to 11 am. For this demonstration, DG1, DG2 and the load bank were synchronized to simulate a load of approximately 5,300 kW. All these operations were remotely controlled through the AMC. After the end if Island 1 test at 11 am, the customers on Circuit 1 were cutover and serviced through Circuit 2.

Figure 40: Island 1 Test Demonstration

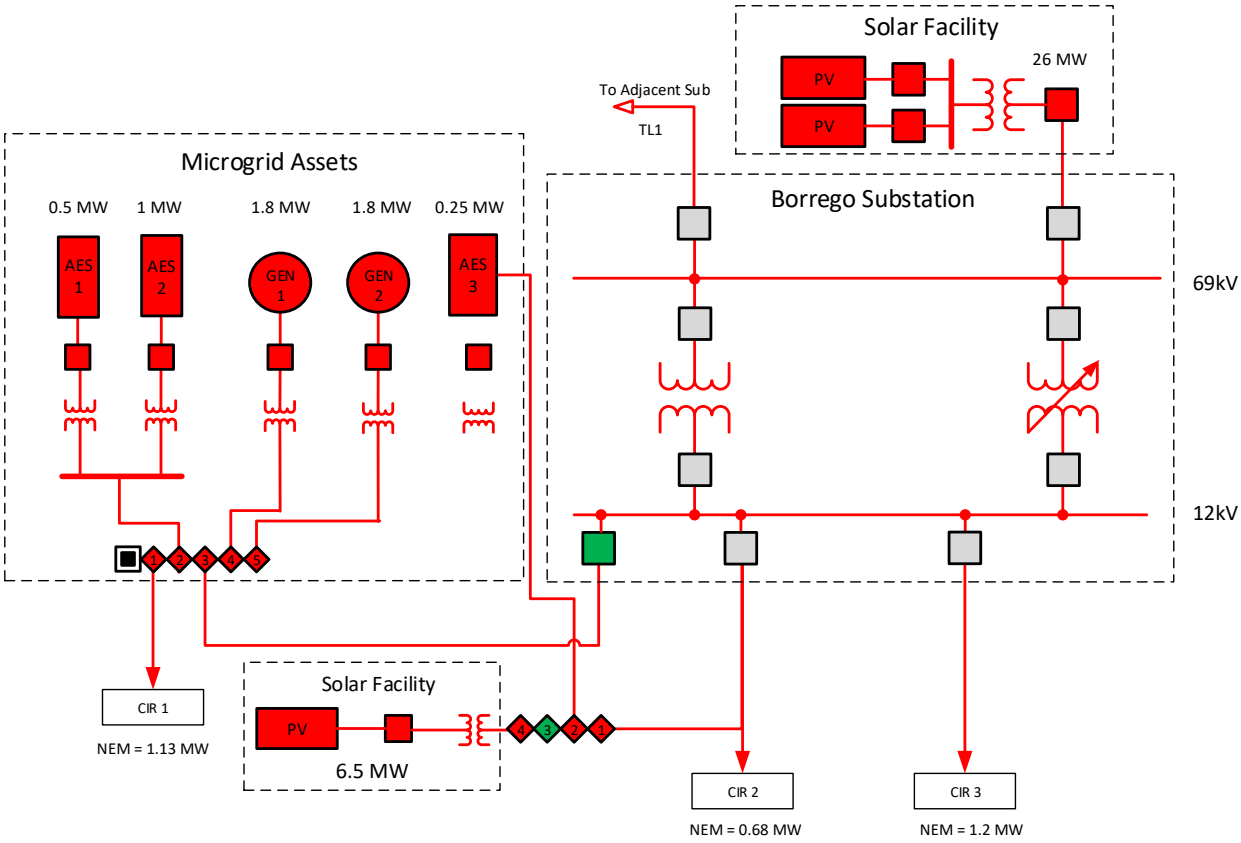

Source: San Diego Gas & Electric Company

Table 20: Operational Procedures – Island Test 1

Test Step	Brief Description
Update distributed generation resources permission logic	Distributed generation resources logic tested by starting distributed generation resources with no, yes, and remove permissions. Subsequently opened five-way switch to test distributed generation resources go through cool down.
Update relay with permission logic	Relay updated for distributed generation resources to receive correct permission status
Update distributed generation resources mode status feedback	This brings feedback into AMC (part of the DERMS platform)
Update models at SDG&E lab	As a backup, the current field configuration was reflected back at SDG&E lab.
Parallel with Distributed Generation Resources and SES Batteries in Base Load Device Operating Mode	AMC was used to remotely control all DER devices individually in combination at varying set points. Negative testing was undertaken where permissions are not sent to the distributed generation resource to test that the commands are prevented, and the systems respond as expected. Testing was undertaken for a period of time to allow for possible events and system response.
Virtual Island on Circuit 1 Using Distributed Generation Resources	AMC was used to remotely to run the distributed generation resources in parallel with the grid and using import device operating mode to confirm that the microgrid can maintain zero flow at the Circuit 1 breaker for an extended period of time. .
Virtual Island on Circuit 1 SES	AMC was run remotely to run the DER devices in parallel with the grid and using import device operating mode to confirm that the microgrid can maintain zero flow at the Circuit 1 breaker for an extended period of time. SES batteries were used to vary the load on Circuit 1 in a manner that is consistent with the load change expected in a planned or unplanned outage on Circuit 1.
Virtual Island on Circuit 1 Using Generators and SES	AMC was used remotely to establish a virtual island with zero flow at the Circuit 1 breaker.
Switching Steps Update	Distribution operation procedures were updated with the following: - Normal → Parallel - Parallel → Circuit 1 Island - Circuit 1 Island → Parallel - Parallel → Normal
Initial Island Entry Check #1	Is AMC using its import mode to zero flow at the PCC breaker
Initial Island Entry Check #2	Once island permission was given generators move into interchange mode where final zero flow happens.

Test Step	Brief Description
Initial Island Entry Check #3	Relay check to ensure zero flow through the PCC breaker before opening to create the island.
Island Circuit 1 Using Single Generator and load bank testing from Parallel	AMC was used to remotely control the DER devices, test that commands from AMC to the Generator were correctly processed and that coordination with switch planning and Island Circuit 1 distribution operations procedure (DOP) were effective. After confirming that the protection systems interact with the devices, the system continued running in Island mode for a significant duration to allow for operational and distribution events that could disrupt the island. All tests include following the DOP and using a standard switch plan as the basis for the test. Return to grid connected with no outage (re-sync to grid).
Island Circuit 1 Using Two Generators from Parallel	AMC was used to remotely control the DER devices, test that commands from AMC to the two Generators were correctly processed and that coordination with switch planning and Island Circuit 1 distribution operations procedure (DOP) were effective. After confirming that the protection systems interact with the devices, the system continued running in Island mode for a significant duration to allow for operational and distribution events that could disrupt the island. All tests include following the DOP and using a standard switch plan as the basis for the test. Return to grid connected with no outage (re-sync to grid).
Island Circuit 1 Using all DER Devices from Parallel	Similar steps were followed to use all DER devices and using AMC to maintain optimal power factor for the generators.
Black-start Island Circuit 1	Circuit 1 was black-started using: - SES - Generators - All available DER devices

Source: San Diego Gas & Electric Company

Figure 41: Island 1 Test on February 28, 2018

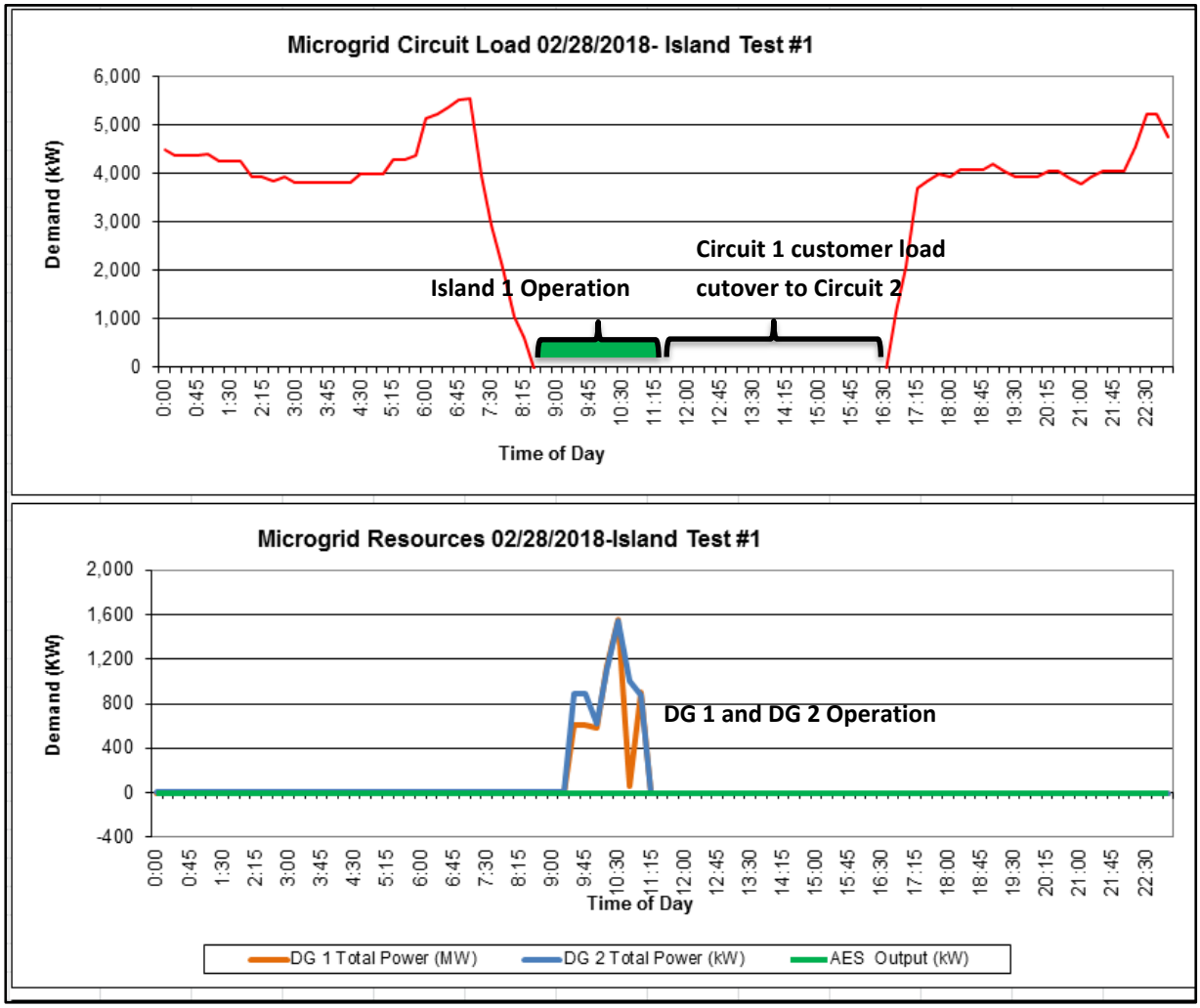

Source: San Diego Gas & Electric Company

The microgrid resources (DG1 and DG2) in this case were able to maintain the voltage and frequency within the acceptable limits. Figure 42

Figure 42: Frequency and Voltage Observation During Island 1 Test #1

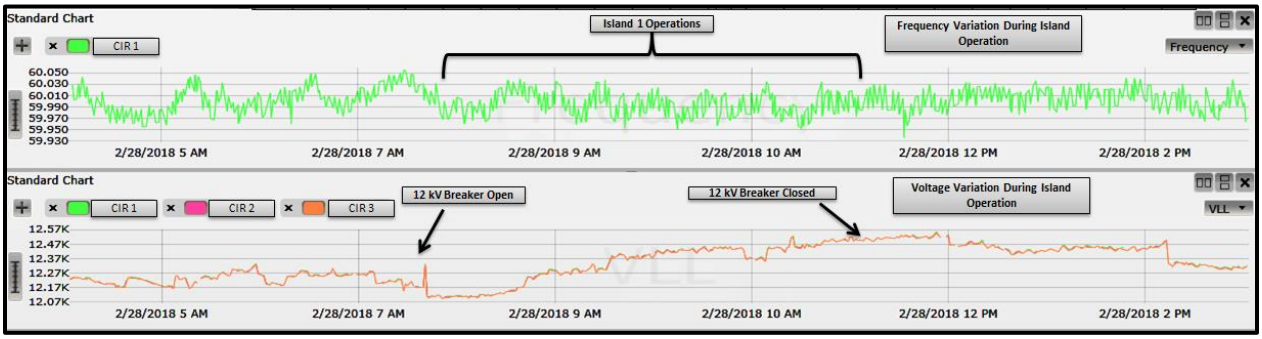

Source: San Diego Gas & Electric Company

Island 2 Test

Objective

The primary objective of island 2 test was to island all three circuits with microgrid resources and real customer load to test the functionality and operation using the AMC. These tests were carried out during night time and day time operations on three separate occasions.

Method

Figure 43 shows the microgrid resources that were used in island 2 test. An island situation was created by opening the breaker on one of the 12 kV transformer banks. Subsequently, the control and automation at the substation opened the second 12 kV transformer bank, thereby islanding all three circuits. This is shown by the two greened out breakers between the 12 kV bus and the two transformers. The two distributed generation resources (GEN 1 and GEN 2) and one of the energy storage systems (AES 2) were used to carry all three islanded circuits. The circuit breakers that are greyed out indicate open or closed for testing the two feeders. This island test included real customer load being provided by the local microgrid resources.

Figure 43: Island 2 Test Demonstration

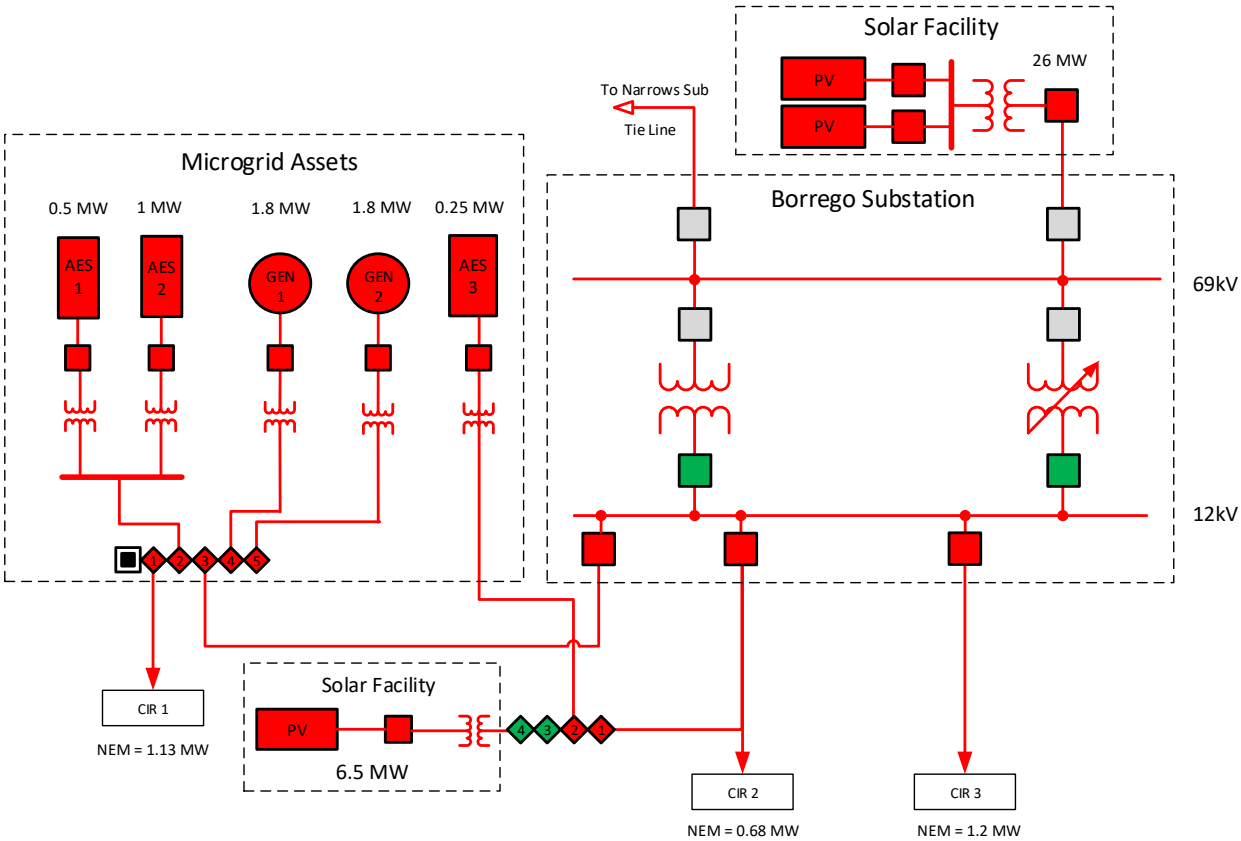

Source: San Diego Gas & Electric Company

Table 21 describes the operational procedures undertaken in support of island test #2:

Table 21: Operational Procedures - Island Test 2

Test Step	Brief Description
Update distributed generation resources permission logic	Distributed generation resources logic tested by starting distributed generation resources with no, yes, and remove permissions. Subsequently opened five-way switch to test distributed generation resources go through cool down.
Update relay with permission logic	Relay updated for distributed generation resources to receive correct permission status
Update distributed generation resources mode status feedback	This brings feedback into AMC (part of the DERMS platform)
Switching Steps Update	Distribution Operation Procedures were updated with the following: - Microgrid non-operational to microgrid operational parallel - Microgrid operational parallel to Circuit 2 Island - Back to Operational parallel - Back to Non operational
Island #2 Entry Check	AMC updated to include Island 2 control group. Automated permissions completed for 12 kV bus. Update models at SDG&E Integrated Test Facility to validate the current field configuration. Is AMC using its import mode to zero flow at the PCC breaker. Once island permission was given generators move into interchange mode where final zero flow happens. Relay check to ensure zero flow through the PCC breaker before opening to create the island.
Virtual Island 12 kV Bus Using distributed generation resources (and AES)	This virtual island creation is similar to Island #1 test, except for the difference in signal source and management of permissive to support Island 12 kV Bus. Depending on the actual load, the AES device was added in base device operating mode to supplement the 3.6 MW available from the two distributed generation resources. When the AES device was involved in the Island, this test also evaluated the ability of the AMC to provide VAr support to maintain optimal generator power factor.
Island Circuit 1, 2 and 3 using the distributed generation resources and AES	This step builds on the virtual island step to island all the three circuits and have the microgrid resources carry the entire load on the circuits. The signal source and management of permission to support this island test come from the AMC. The AES device was added in the base device operating mode to supplement the 3.6 MW available from the two distributed generation resources. In the event that the actual load is greater than the capacity of the devices the import set point was varied to simulate dropping load. After confirming that the protection systems interact with the devices and AMC as expected, the system continued running in Island mode for a significant duration to allow for operational and distribution events that could disrupt the island. All tests include following the DOP and using a standard switch plan as the basis for the test. Return to grid connected with no outage (re-sync to grid).

Source: San Diego Gas & Electric Company

Observations

Island 2 Test observations using microgrid resources (DG and AES) was demonstrated successfully by remotely controlling the microgrid resource using the AMC. Figure 44 presents a summary of the island demonstration on May 15, 2018. This island demonstration was run during day time between 10:30 am to 3:15 pm. For this demonstration, DG1 and DG2 were synchronized with the microgrid circuits with a load of approximately 3,000 kW. The AES units were operated initially in charging mode for about one hour between 11:00am to 12:00pm. Later, the AES units operated in discharging mode for about two hours between 12:00pm to 2 pm, followed again by charging the AES units between 2 pm to 3 pm. All these operations were remotely controlled through the AMC.

Figure 44: Island 2 Test on May 15, 2018

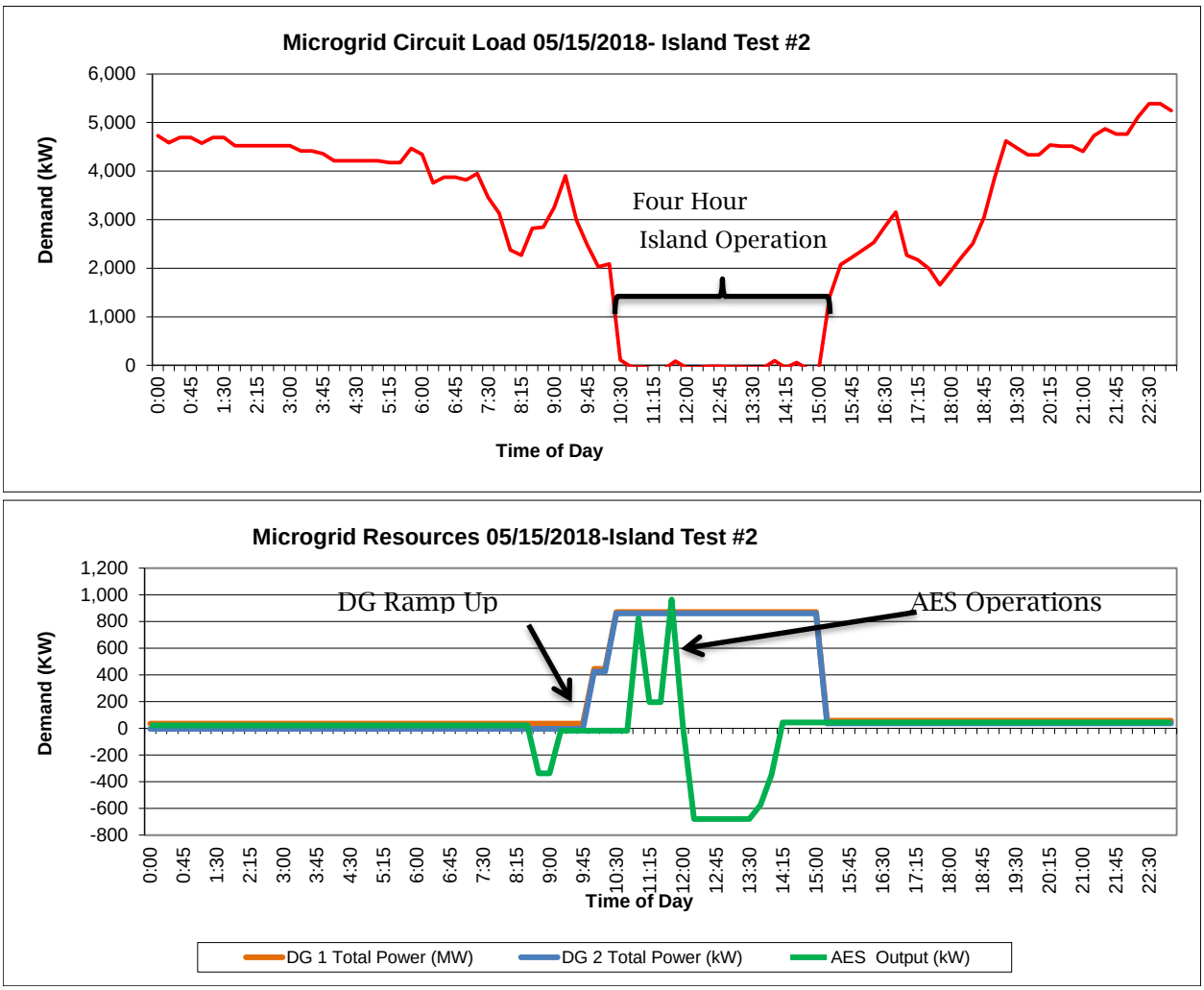

Source: San Diego Gas & Electric Company

The island test #2 was undertaken on May 15, 2018 with a relatively high temperature of ~93 degrees Fahrenheit. The Borrego community load was forecasted at ~ 3.2 MW. During the island

demonstration between 10:30 am to 3 pm, all three circuits (2,790 customers) were 100 percent supported for the duration of the event, with no outage observed on the customer side. The transition of the resources into island mode and back in grid-parallel mode was seamless, with the overall system seamlessly transition to the electric grid at ~3:14 pm. Figure 45 and Figure 46 outline the frequency observed at Circuit 1 breaker and the voltage observed at Circuit 1, Circuit 2 and Circuit 3 during island operation. The step change in frequency and voltage during island formation is noteworthy and can be a challenge to manage.

Figure 45: Frequency Observation at Circuit 1 Breaker During Island Test #2

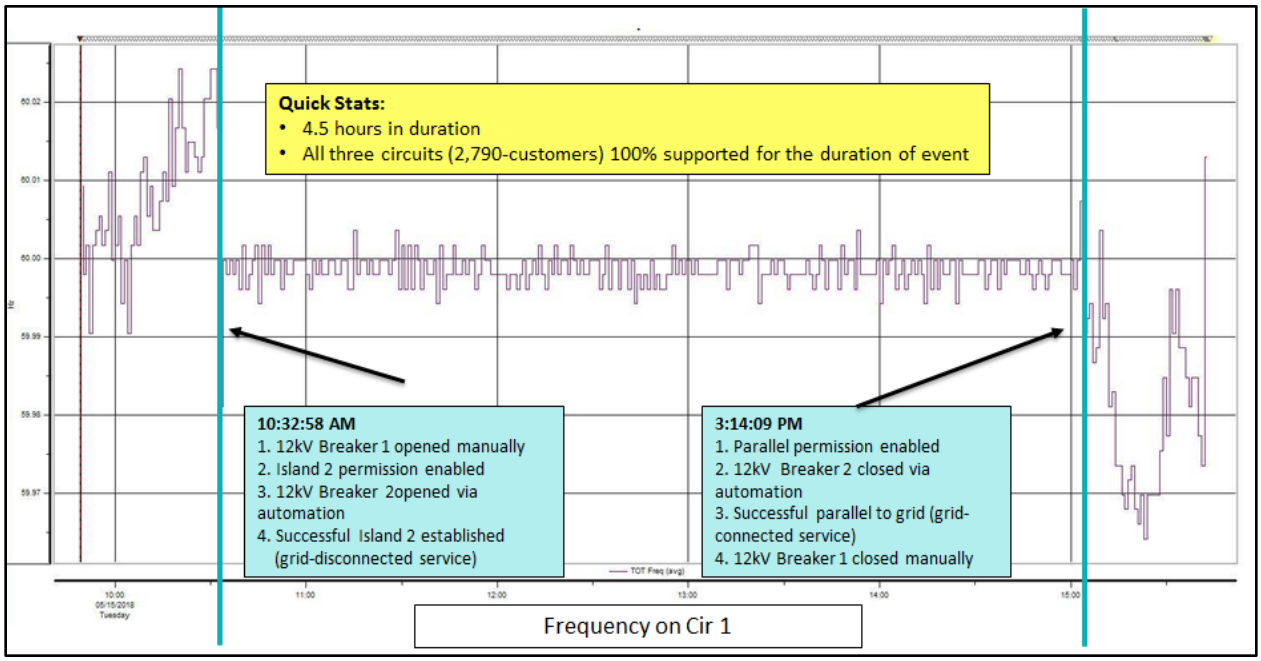

Source: San Diego Gas & Electric Company

Figure 46: Frequency and Voltage Observation During Island Test #2

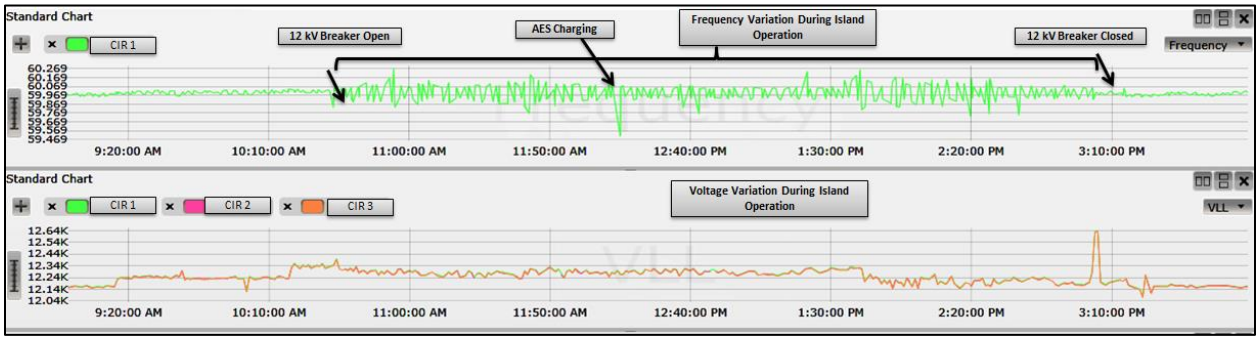

Source: San Diego Gas & Electric Company

Island 3 Test

Objective

The primary objective of island 3 test was to island all three circuits with microgrid resources (including the large 3rd party solar facility on the 69 kV) and real customer load to test the functionality and operation using the AMC. These tests were carried out during day time once during the project performance period.

Method

Figure 47 shows the microgrid resources that were used in the island 3 test. An island situation was created by opening the breaker on the tie line to the 69 kV breaker; as shown by the greened out breaker in the diagram below. The two distributed generation resources (GEN 1 and GEN 2), the 26 MW PV facility, and the energy storage system (AES 2) were used to carry the three circuits during island testing. This test included actual customer load and customer-owned rooftop PV.

Figure 47: Island 3 Test Demonstration

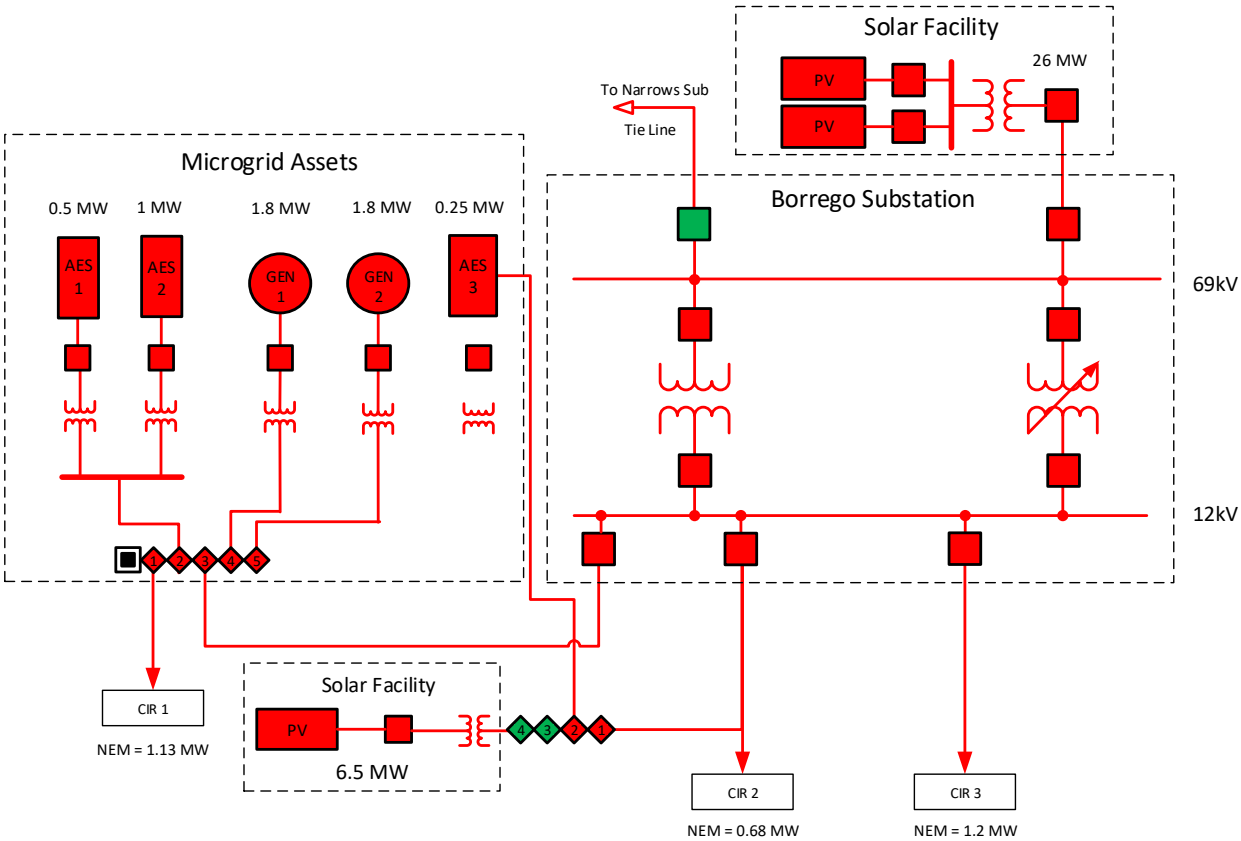

Source: San Diego Gas & Electric Company

Table 22 describes the operational procedures undertaken in support of island 3 test.

Table 22: Operational Procedures - Island Test 3

Test Step	Brief Description
Update distributed generation resources permission logic	Distributed generation resources logic tested by starting the distributed generation resources with no, yes, and remove permissions. Subsequently, opened five-way switch to test the distributed generation resources go through cool down.
Update relay with permission logic	Relay updated for distributed generation resources to receive correct permission status
Update generator mode status feedback	This brings feedback into AMC (part of the DERMS platform)
Switching Steps Update	Distribution Operation Procedures were updated with the following: - Microgrid non-operational to microgrid operational parallel - Microgrid operational parallel to Circuit 3 Island - Back to Operational parallel - Back to Non-operational
Island 3 Entry Check	AMC updated to include Island 3 control group. Automated permissions completed for 69 kV bus. Update models at SDG&E Integrated Test Facility, to validate the current field configuration.
Virtual Island 69 kV Bus Using Generators (and AES)	This virtual island creation is similar to Island #1 test, except for the difference in signal source and management of permissive to support Island 12 kV Bus. Depending on the actual load, the AES device was added in base device operating mode to supplement the 3.6 MW available from the two distributed generation resources. When the AES device was involved in the Island, this test also evaluated the ability of the AMC to provide VAr support to maintain optimal distributed generation resources power factor.
Virtual Island 69 kV Bus Using Distributed generation resources, AES, and 3rd Party Solar Facility	This test is equivalent to island 1 test and includes integrating 3rd Party PV interfaces, controls and generation to achieve “virtual island” of 69 kV bus (zero flow from transmission).
Island Circuit 1, 2 and 3 using the 3rd Party Solar Facility, Distributed generation resources and AES	This step builds on the virtual island step to island all the three circuits and have the microgrid resources (including the 26 MW PV Facility on the 69 kV) carry the entire load on the circuits. The signal source and management of permission to support this island test come from the AMC. The AES device was added in the base device operating mode to supplement the 3.6 MW available from the two distributed generation resources. In the event that the actual load is greater than the capacity of the devices the import set point was varied to simulate dropping load. After confirming that the protection systems interact with the devices and AMC as expected, the system continued running in Island mode for a significant duration to allow for operational and distribution events that could disrupt the island. All tests include following the DOP and using a standard switch plan as the basis for the test. Return to grid connected with no outage (re-sync to grid).

Source: San Diego Gas & Electric Company

Observations

Island 3 testing occurred on May 17, 2016 and March 7, 2018. For the test on May 17, 2016, Island 3 test was undertaken as a planned outage with several poles on the 69 kV transmission line scheduled for replacement. The objective of this test was to use the microgrid resources (distributed generation and large 3rd party solar) to island the entire community of Borrego Springs. Around 5:30 am the team began executing the switching plan by firing up the resources. Once the island permission was granted the 69 kV tie line was opened and the microgrid started operating in island mode at 6:16am. However, the third-party solar system dropped due to frequency and voltage excursion. The microgrid operated in island mode for the next hour until both the distributed generation units were taken offline.

The test was partially successful as the microgrid operated in island mode with distributed generation resources even after the third-party solar system dropped off. The microgrid uptime for this test was 61 minutes. After 61 minutes customers were notified of outage durations which lasted for about 4.5 hours. A logic test was conducted at 11 am to determine return to parallel operations, followed by return to parallel at 11:40 am with full service restored to customers. Figure 48 presents a summary of the island demonstration on May 17, 2016.

Figure 48: Island 3 Test on May 17, 2016

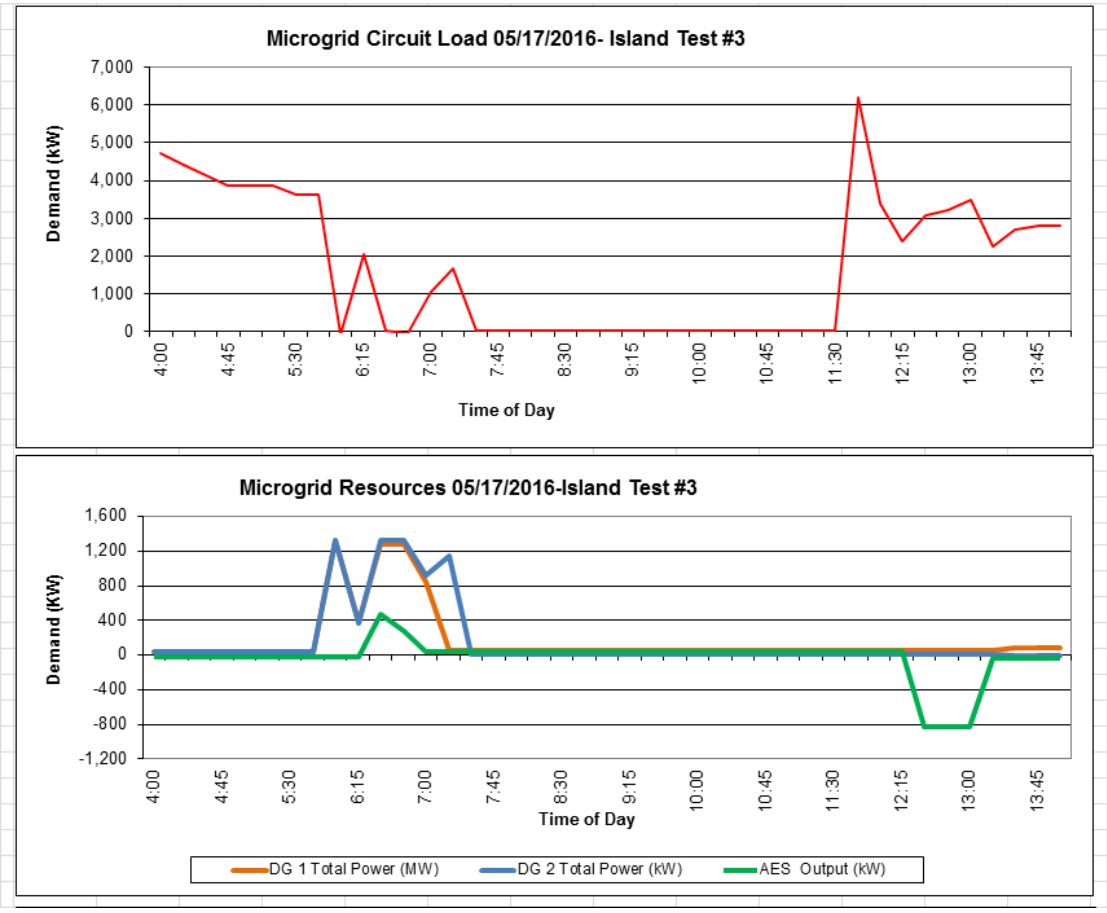

Source: San Diego Gas & Electric Company

Figure 49 shows the voltage observed on the 69 kV and 12 kV during Island 3 operations.

Figure 49: 69 kV and 12 kV Voltage During Island 3 Test on May 17, 2016

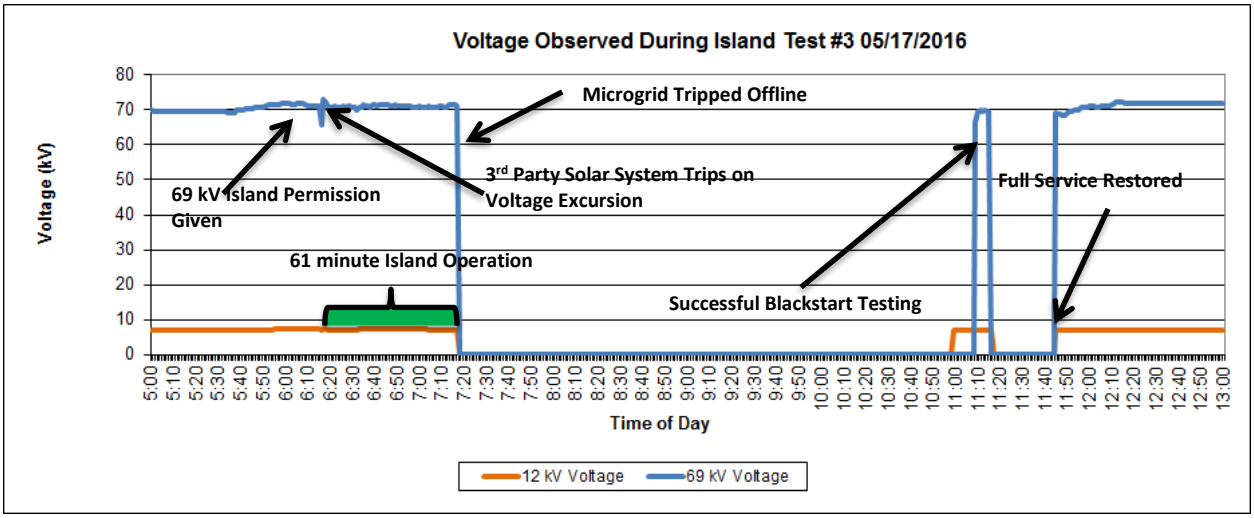

Source: San Diego Gas & Electric Company

Island 3 test on March 7, 2018 was undertaken with communication interface between the AMC and the large 3rd party solar facility. The test was deemed unsuccessful after the third-party solar system tripped on over voltage conditions. The microgrid ran in Island 3 scenario for two minutes between 11:08am to 11:10am. Service was restored subsequently to all customers. Figure 50 outlines the frequency, voltage and circuit load observed during island 3 testing.

Figure 50: Frequency, Voltage and Circuit Load Observation during Island Test #3 on March 7, 2018

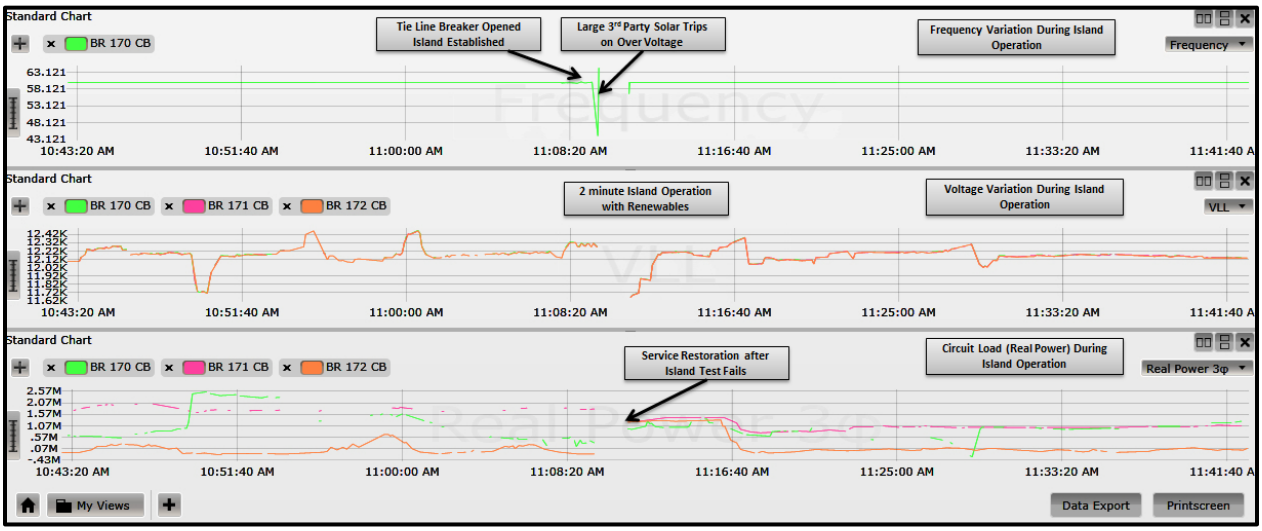

Source: San Diego Gas & Electric Company

CHAPTER 5: Lessons Learned and Recommendations

Lessons Learned

The PV-based microgrid project was a challenging effort due to the complexity of the integration of high PV penetration systems, both at the 12 kV distribution level, and the 69 kV sub-transmission level. An increasing number of PV systems are being deployed in the SDG&E service territory, which have the potential of impacting electric transmission and distribution operations, and, in turn, the customers. The project team with multiple stakeholders; both internally and externally identified these complexities through a rigorous process of requirements data gathering and use-case definitions.

SDG&E's Electric Distribution Operations (EDO) department manages the distribution network; but EDO did not have significant experience managing multiple DERs at the distribution level. To improve this situation, one of the core objectives of this project was the development of an AMC that would allow EDO to operate these DERs in an automated manner. The project team understood the challenge and developed an approach that allowed EDO, over time, to take ownership of the operation of the Borrego Springs Microgrid.

Voltage and frequency stability is one of the primary responsibilities to ensure safe and reliable operation of DERs within a microgrid. The project team undertook preliminary individual asset tests to understand how each asset responds to changes in load, thereby documenting their responses to change in voltage and frequency. Testing performed at the SDG&E Integrated Test Facility and NREL laboratory was invaluable in understanding the AMC functional requirements.

Protection and resynchronization capabilities that are required to meet the functional requirements were not implemented in the AMC test platform at the lab. Instead, the AMC is designed to coordinate with constituent components of the microgrid to achieve the required functionality. For example, the functional requirement for reconnection requires that the PCC circuit breaker be closed only when amplitude, frequency, and phase angle differences between the microgrid voltage and area electric power system voltage are small enough. In this case, the AMC relies on the synchronization logic implemented in the synchronization relay of the PCC circuit breaker, and the AMC is not actively involved with synchronization after a command is issued to the PCC circuit breaker to initiate synchronization.

It is possible to include active resynchronization capability in the AMC. This requires the controller to adjust the voltage and frequency set points of the asset acting as voltage and frequency master to reduce the magnitude, frequency, and phase angle errors. However, it is typical for microgrid controllers to rely on a constituent component to perform this function. Therefore, for future microgrid controller evaluations, it is recommended that this task should be performed considering the standard capabilities of constituent components. This approach was taken in the draft version of the IEEE P2030.8 standard (IEEE 2018), released in March 2018.

Frequency measurements must be accurate because frequency is an important indicator of microgrid stability, especially in a low-inertia environment, such as the Borrego Springs Microgrid, when it is operating with a high level of renewable generation. Therefore, SDG&E and NREL worked with researchers from the National Institute of Standards and Technology (NIST) to identify potential improvements in frequency measurement, both in RTDS software and in the hardware for grid simulator protection. Some anonymized data collected during testing will be provided to NIST for analysis. NREL and NIST will publish the results in a peer reviewed conference or journal to disseminate the findings.

Based on the amount of load that the microgrid had to service, the availability of two distributed generation resources provided increased stability when both were online at all times during microgrid operations. This was particularly important to EDO to ensure that no customer outage was observed if some of the tests did not perform as planned. Even though extensive testing of the distributed generation resources controller was performed in the laboratory, not all field operations were able to be simulated. The project team recommends that when practical, it is essential that all possible tests be conducted in the test facility to simulate every possible issue found in field operations.

The RSCAD model for Borrego Springs did not contain capacitor controller logic. This made the 24-hour simulations performed (at the lab) for evaluation of the AMC's dispatch functionality cumbersome. Capacitor control logic was added, but the team was unable to obtain data on the controls used in the field and implemented typical controller logic with typical settings. These controls, however, did not interact well with the voltage regulator controls in the RSCAD file, and it was necessary to fix the voltage regulator settings for the simulations to maintain voltage regulation. For this reason, the project team recommends any other microgrid research should include a RSCAD model for such simulations.

During testing of the ACT control functions, incompatibility with control settings for the capacitor banks and voltage regulator controller were observed. It is believed that the best approach to address this dilemma would be to add voltage regulator and capacitor controller hardware to the Hardware-in-the-Loop (HIL) simulation setup with the same settings programmed as those used in the field. Performance could also be improved by replicating the controls and control settings from the field in the simulation. Furthermore, regulation of reactive power flow across the PCC could be improved if the voltage regulator and capacitor controllers are coordinated with the microgrid controller.

AMC functionality is still evolving, but having a controller that can manage multiple DERs in a way that extend the life of operations is important for successful operations. A significant effort was placed on the development of an AMC for this project. The challenge for the AMC was that there was not an existing product in the market that could easily be acquired and modified to meet the needs of the project. SDG&E decided to work with Spirae to provide the AMC functionality as part of the overall DERMS platform for SDG&E. The AMC managed the microgrid tests and demonstrations by providing a method to easily operate the systems from a single screen, schedule equipment, monitor operations, and collect data. The AMC was successfully used to support the demonstrations, including islanding operations, but is not a

standalone and fully-automated control system. SDG&E has plans to integrate the DERMS AMC functionality with SDG&E's Distribution Management System (DMS).

Energy storage deployments are increasing exponentially, as this technology has demonstrated the potential to effectively incorporate renewables into utility distribution operations. The integration of energy storage in the microgrid through the AMC is crucial for successful operations in a highly renewable and variably loaded microgrid. Challenges remain with the characterization and selection of battery chemistry, especially given the harsh weather challenges that a desert location imposes on the battery compartment. Cooling of the storage containers and the protection control systems for the battery systems is required to maintain appropriate operating temperatures in the storage system enclosures. It is important to note that the cooling of the storage enclosures may potentially decrease the efficiency of the units; as some battery capacity may be diverted from the microgrid towards powering the cooling component of the storage system enclosures during islanding.

The integration of DER devices along with the traditional devices of the power system such as voltage regulators and capacitors is important for remote control of feeder voltage regulation. Since the DMS, SCADA, and the protection systems were designed for a centralized control through those systems, it becomes an important design challenge to ensure that the control actions of the AMC do not conflict with the control actions of the DMS. Devices such as capacitors, voltage regulators, and DER devices such as inverter-based storage systems can potentially fight amongst one another to solve a volt/VAr issue. A comprehensive protection update along with updates to the communication infrastructure is required to ensure coordination and interoperability amongst various devices.

Operation of a utility microgrid along with the ability to sectionalize load in portions that are relatively small, compared to the voltage/frequency regulating devices, results in better voltage and frequency, and thereby better power quality on the circuits. Additionally, single point of common coupling for multiple resources within a microgrid drastically reduces the amount of automation required for seamless movement between parallel operation and island operation of the microgrid. The complexity of integration increases exponentially as assets are added to the microgrid.

CHAPTER 6:
Public Benefits to California

The extrapolation of the lessons learned from the Borrego Springs Microgrid project are expected to benefit California electricity ratepayers. The deployment of DERs at the distribution level increases the requirement for a technologically proven concept to address issues such as bi-directional power flow, power quality issues, and reliability of service. Microgrids such as the Borrego Springs Microgrid can address these issues and provide wide ranging benefits to the ratepayers. Some of the benefits include:

- Greater grid reliability – Microgrids can increase grid reliability by reducing peak-demand on the circuit and providing the mechanism to incorporate DERs as a solution to increasing the reliability. This in turn, enhances the power quality at various points in the power system, which may otherwise require expensive upgrades.
- Increased safety – Microgrids enhance safety in locations where they are deployed by creating seamless islanding capability for critical emergency operations in the event of a grid outage, including natural disasters such as wildfires or other emergency situations.
- Impact on load profile and duck curve – Microgrids are capable of ramping DERs quickly to reduce intermittency from renewables and provide reduced and consistent load profile for the electric grid.
- Environmental support – Microgrids enable inclusion of high renewable energy generation resources (such as the 26 MW solar facility), thereby supporting the environmental targets and grid operations concurrently. It also provides alternative options to secure infrastructure that pass through environmentally sensitive areas such as state parks, bodies of water, or other sensitive areas.
- Societal benefits - Residents of Borrego Springs can seek refuge in the designated “cool zones” served by the microgrid during power interruptions that are planned or unplanned.

Using an AMC under real-time operating situations advances future deployment of microgrids by California utilities, third party developers, and electric consumers alike. All market segments will benefit from microgrid adoption including universities, large corporations, military bases, and utilities seeking non-wires alternatives to capital investment in distribution infrastructure. Microgrids such as the Borrego Springs Microgrid will serve as technology solution for the Distribution Resources Plan (DRP) that the California utilities are mandated to adopt. Points that are identified through the Integration Capacity Analysis and Locational Net Benefit Analysis potentially can be operated as a microgrid if DERs and a AMC are deployed. The entire state could benefit from wide scale adoption of microgrids that can operate and interoperate to provide greater local grid resiliency.

CHAPTER 7:
Technology / Knowledge Transfer Activities

Microgrids are a relatively recent technology solution that are not known to many in industry, academia, and customers. And most have limited exposure to the workings of a microgrid. The SDG&E project team has engaged in multiple knowledge sharing sessions with various stakeholders since the early days of the Borrego Springs community microgrid. For this task, the project team implemented a plan to make the knowledge gained, experimental results, and lessons learned available to the public and key decision makers. Education, outreach and knowledge transfer activities included:

- Outreach to the residents and community of Borrego Springs.
- Development of project documents and distribution, including:
    - Project fact sheets and presentations
    - Press releases
    - Project videos and outreach materials
- Participation in conferences, webinars, and workshops that included knowledge transfer activities.
- Stakeholder holder engagement included the outreach to the following stakeholders:
    - Borrego Springs Community
        - Borrego Springs Chamber of Commerce
        - Anza-Borrego Desert Natural History Association
        - San Diego County Sheriff's Department (Local CHP Office)
        - Borrego Springs Fire District
        - La Casa Del Zorro Resort
        - Borrego Springs Resort
    - Government Entities
        - USDOE
        - California Public Utilities Commission
        - National Laboratories
        - National Renewable Energy Laboratory
        - Sandia National Laboratory
        - Pacific Northwest National Laboratory
        - California Independent System Operator
    - Academic Institutions

        - University of California San Diego
        - University of San Diego
        - California Polytechnic State University – San Luis Obispo
    - Industry Participation
        - DistribuTECH Conferences
        - IEEE Conferences
        - Smart Energy Power Alliance
        - Oncor Electric
        - Korea Electric Power Company
        - Southern California Edison
        - Pacific Gas & Electric
        - Sumitomo Electric
        - New Energy and Industrial Technology Development (NEDO), Japan

Appendix D presents the news stories, website postings, presentations, and videos that were developed to support the Borrego Springs Microgrid project.

LIST OF ACRONYMS

Term	Definition
ABDNHA	Anza-Borrego Desert Natural History Association
ACT	Advance Control Technology
AES	Advanced Energy Storage
AMC	Advanced Microgrid Controller
BDEP	Borrego Desert Energy Project
BESS	Battery Energy Storage System
CAISO	California Independent System Operator
CHIL	Controller Hardware-in-the Loop
CHP	California Highway Patrol
DER	Distributed Energy Resources
DERMS	Distributed Energy Resource Management System
DMS	Distribution Management System
DNP	Distribution Network Protocol
USDOE	United States Department of Energy
DOP	Distribution Operations Procedure
EDO	Electric Distribution Operations
EPIC	Electric Program Investment Charge
ERM	Energy Resource Manager
ESIF	Energy Systems Integration Facility
FAQ	Frequently Asked Questions
GTNET	Gigabit Transceiver Network Interface
HIL	Hardware-in-Loop
IEEE	Institute of Electrical and Electronics Engineers
kV	Kilovolt
kVA	Kilovolt Ampere
kVAr	Kilovolt Ampere Reactive

Term	Definition
kW	Kilowatt
MAIFI	Momentary Average Interruption Frequency Index
MW	Megawatt
NEDO	New Energy and Industrial Technology Development
NIST	National Institute of Standards and Technology
NREL	National Renewable Energy Laboratory
PCC	Point of Common Coupling
PHIL	Power Hardware-in-the-Loop
PIER	Public Interest Energy Research
PMU	Phasor Measurement Unit
PV	Photovoltaic
REG	Regulator
RMS	Root Mean Square
RTDS	Real-Time Digital Simulator
SAIDI	System Average Interruption Duration Index
SAIFI	System Average Interruption Frequency Index
SCADA	Supervisory Control and Data Acquisition
SDG&E	San Diego Gas & Electric
SES	Substation Energy Storage
UCSD	University of California San Diego
VAr	Volt-Ampere-Reactive
VFI	Variable Fault Indicator
VPN	Virtual Private Network

REFERENCES

Ainsworth, Nathan, Ali Hariri, Prabakar Kumaraguru, Annabelle Pratt, and Murali Baggu. 2016. "Modelling and Compensation Design for a Power Hardware-in-the-Loop Simulation of an AC Distribution System." Paper presented at the North American Power Symposium, Denver, Colorado, September 18–20, 2016.

ANSI (American National Standards Institute). 2011. "Table 1." ANSI C84.1-2016: American National Standard for Electric Power Systems and Equipment – Voltage Ratings (60 Hertz)https://kupdf.net/queue/ansi-c841-2011_598f5a7edc0d60fa24300d1b_pdf?queue_id=-1&x=1531074242&z=NjQuMTg0LjIzNi41Mw==.

California Energy Commission. 2014. PON-14-301 – Demonstrating Secure, Reliable Microgrids and Grid-Linked Electric Vehicles to Build Resilient, Low-Carbon Facilities and Communities, Attachment 12, Table 5. http://www.energy.ca.gov/contracts/PON-14-301/.

IEEE (Institute of Electrical and Electronics Engineers). 2003. IEEE 1547: Standard for Interconnecting Distributed Resources with Electric Power Systems. http://grouper.ieee.org/groups/scc21/1547/1547_index.html.

IEEE (Institute of Electrical and Electronics Engineers). 2014. IEEE Std 1547a-2014 (Amendment to IEEE Std 1547-2003) – IEEE Standard for Interconnecting Distributed Resources with Electric Power Systems – Amendment. https://standards.ieee.org/findstds/standard/1547a-2014.html.

IEEE (Institute of Electrical and Electronics Engineers). 2018. IEEE 2030.8: Approved Draft Standard for the Testing of Microgrid Controllers. https://standards.ieee.org/develop/project/2030.8.html.

Maitra, Arindam, Annabelle Pratt, Tanguy Hubert, Dean Weng, Kumaraguru Prabakar, Rachna Handa, Murali Baggu, and Mark McGranaghan. 2017. "Microgrid Controllers: Expanding Their Role and Evaluating Their Performance." IEEE Power and Energy Magazine 15(4):41–49 July–August.

Wang, Jing, John Fossum, Kumaraguru Prabakar, Annabelle Pratt, and Murali Baggu, 2018. "Development of Application Function Blocks for Power-Hardware-in-the-Loop Testing of Grid-Connected Inverters." IEEE 9th International Symposium on Power Electronics for Distributed Generation Systems (PEDG), June 25–28, Charlotte, NC, USA, 2018.

APPENDIX A: Results of Advanced Microgrid Controller Evaluation in the Laboratory

This section presents results from the microgrid controller evaluation for the different test cases outlined in the test plan. Not all the test cases described in the test plan were completed due to significant delays in delivery of the microgrid controller to NREL.

Scenario A: Operating the Microgrid While Connected to the Utility

The purpose of simulating the scenario of operating the microgrid while connected to the utility was to validate the ability of the Spirea Wave Advanced Microgrid Controller to dispatch the DERs while grid-connected and to achieve survivability of critical loads when islanded, economic operation, and environmental performance compared to the outcomes for the community without the microgrid controller, as specified by the functional requirement C5: Dispatch.

The test setup as shown in Figure A-1 was used, unless noted otherwise.

Figure A-1: Borrego Springs ESIF local CHIL/PHIL setup

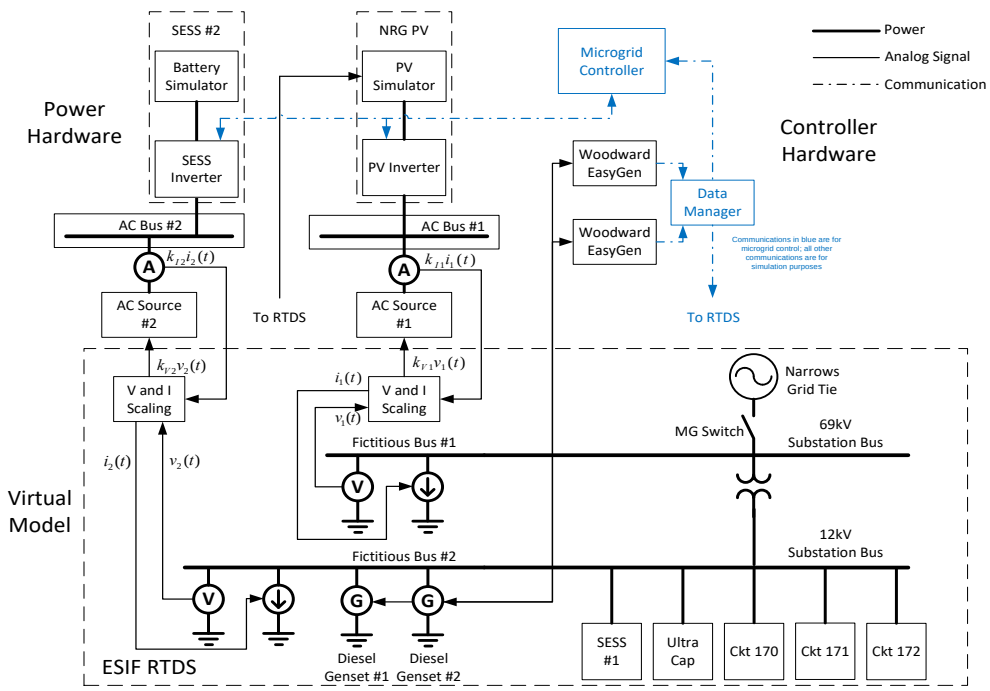

Source: San Diego Gas & Electric Company

In this scenario, the microgrid switch was closed, and the community microgrid was connected to the external utility, which effectively controls both voltage and frequency in the microgrid. Net load data profiles for heavy and light load days were used, down sampled to 10-minute time steps.

For the baseline, the Wave controller was disabled; for other test cases, the Wave controller provided dispatch. The Wave code that NREL used was only able to dispatch one BESS, because only one BESS is dispatchable in the field. NREL set up our experiment so that the Schneider inverter hardware represented the dispatchable BESS and the simulated BESS was not used.

Accelerated (faster than real time) simulations were performed whereby 10 minutes of simulation time equaled 15 seconds of real time. NREL used 15 seconds to allow transients to settle after a load step. The results presented in this section are based on the values reached in the last 3 seconds of each 15-second period to exclude the transients after a change in load or insolation.

Results for Test Case A1: Normal Grid-Connected Operation with No Dispatch (Baseline)

In this test, dispatch was not enabled in the Wave microgrid controller, all dispatchable generation sources were offline, and PV was the only asset running.

Results for Test A1.1: Heavily Loaded Normal Grid-Connected Operation with No Dispatch

The net load and insolation profiles for heavy load, were used for the simulation. The net power profiles for each distribution circuit are shown in Figure A-2. The active power profiles match the loads, except for circuit 2 between about 06:00 and 18:00. The active power should be negative, but it is zero. This is because the dynamic load models in RSCAD can only simulate positive power. NREL replaced the dynamic loads with a power injection model that can absorb and supply both positive and negative active and reactive power, but this was unstable and there was not sufficient time to resolve this. The reactive power profiles for circuits 2 and 3 are shifted compared to the net reactive load profiles because of reactive power added by the inter-rack transformers in the RSCAD model, and this impacts the results of the controller dispatch of reactive power. In addition, the reactive power profiles for circuits 1 and 3 are different because there are capacitor banks on the distribution circuits that have local control that turns the capacitor banks on or off based on the local voltage. The step changes in reactive power at about 12:00 and 14:00 on circuit 3 and at about 21:00 and 22:30 on circuit 1 are due to the switching of capacitor banks on those circuits (Figure A-3).

A line plot of generation, which is only PV for this test, along with the power flow through the PCC circuit breaker, is shown in Figure A-4 shows the PCC voltage and current. The PCC power flow is dominated by PV generation and it significantly impacts the voltage at the microgrid PCC, raising it to almost 1.045 p.u. in the early afternoon. The impact of the capacitor switching on circuits 1 and 3 can also be seen on the PCC reactive power flow and the PCC voltage. The

increase in PCC reactive power at about 5:00 and the decrease at about 20:00 are because of the switching action of two capacitor banks on the 12 kV bus.

Figure A-2: Line Plot of Net Power Flow for Each Individual Circuit Within the Microgrid for Test A1.1

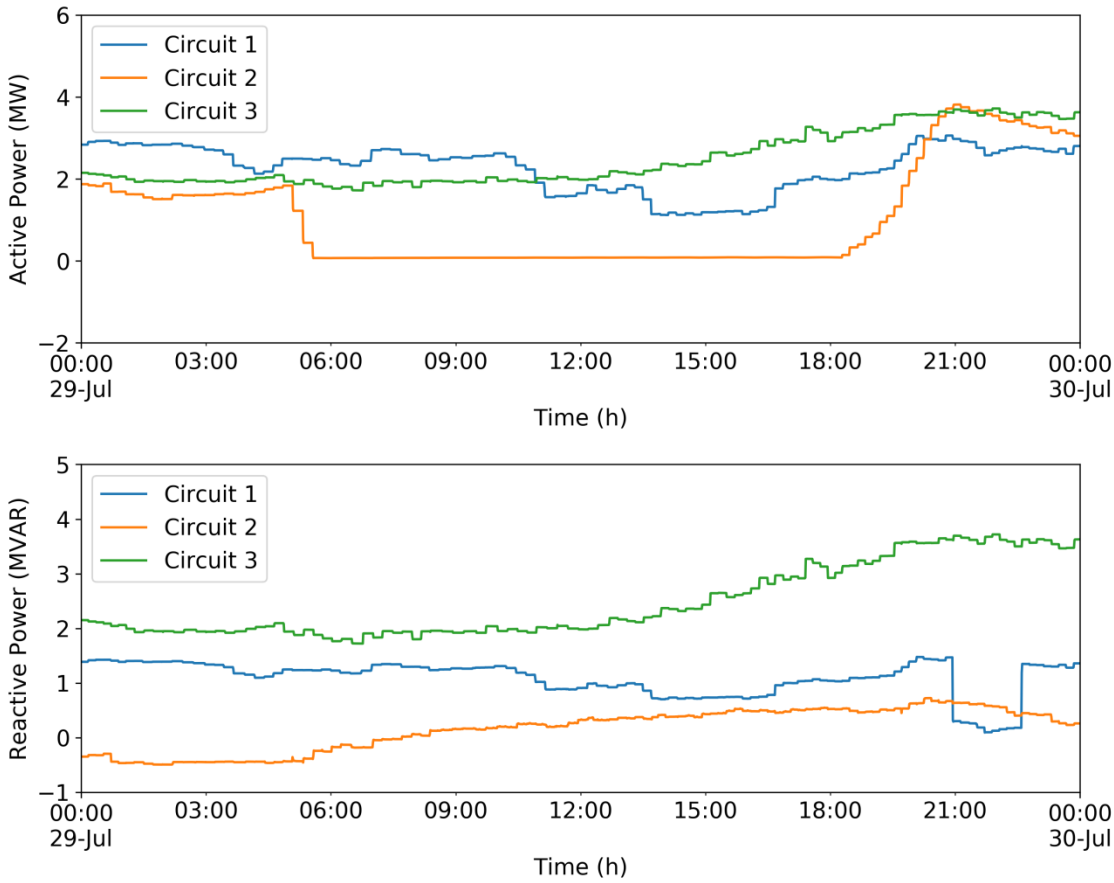

Source: San Diego Gas & Electric Company

Figure A-3: Line Plot of Generation and PCC Power Flow Within the Microgrid for Test A1.1

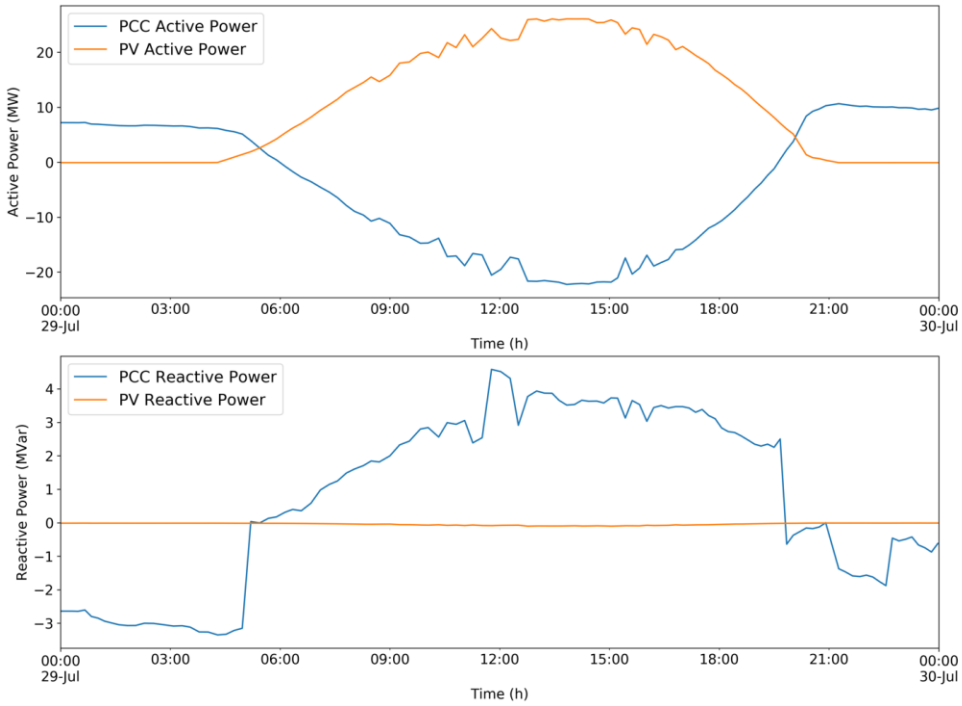

Source: San Diego Gas & Electric Company

Figure A-4: PCC Voltage and Current for Test A1.1

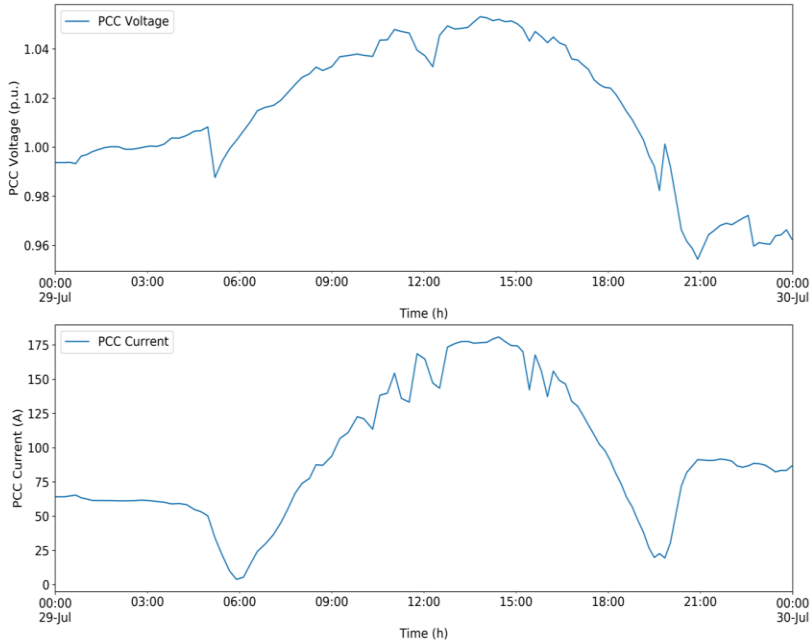

Source: San Diego Gas & Electric Company

Results for Test A1.2: Lightly Loaded Normal Grid-Connected Operation with No Dispatch

In this test, the load and insolation profiles for lightly loaded conditions was used. The net power profiles for each distribution circuit is shown in Figure A-5. The generation, which is only PV, and PCC active power and reactive power is shown in Figure A-6. The power generated from the PV is distributed to the loads and also to the grid through the PCC. The voltage at the PCC and the current through the PCC circuit breaker, shown in Figure A-7, increases as the power generated from the PV increases.

Figure A-5: Line Plot of Net Power Flow for Each Individual Circuit Within the Microgrid for Test A1.2

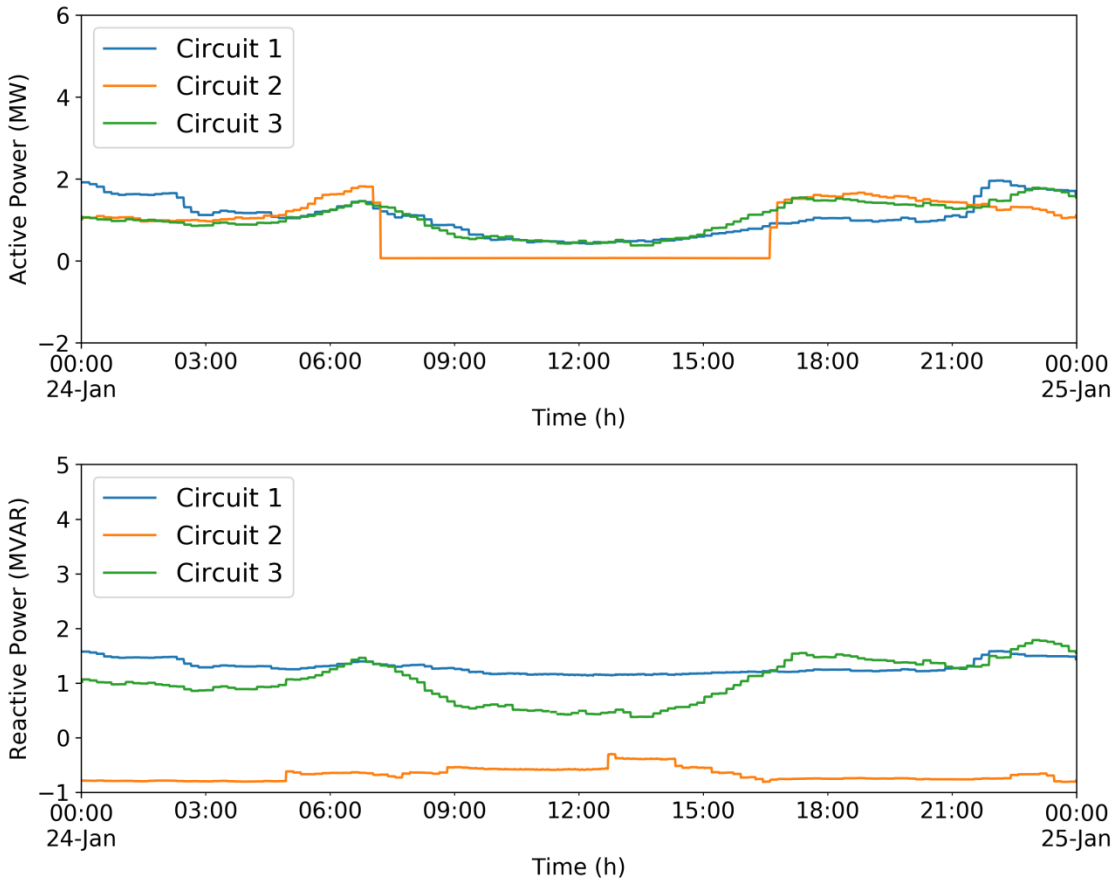

Source: San Diego Gas & Electric Company

Figure A-6: Line Plot of Generation and PCC Power Flow Within the Microgrid for Test A1.2

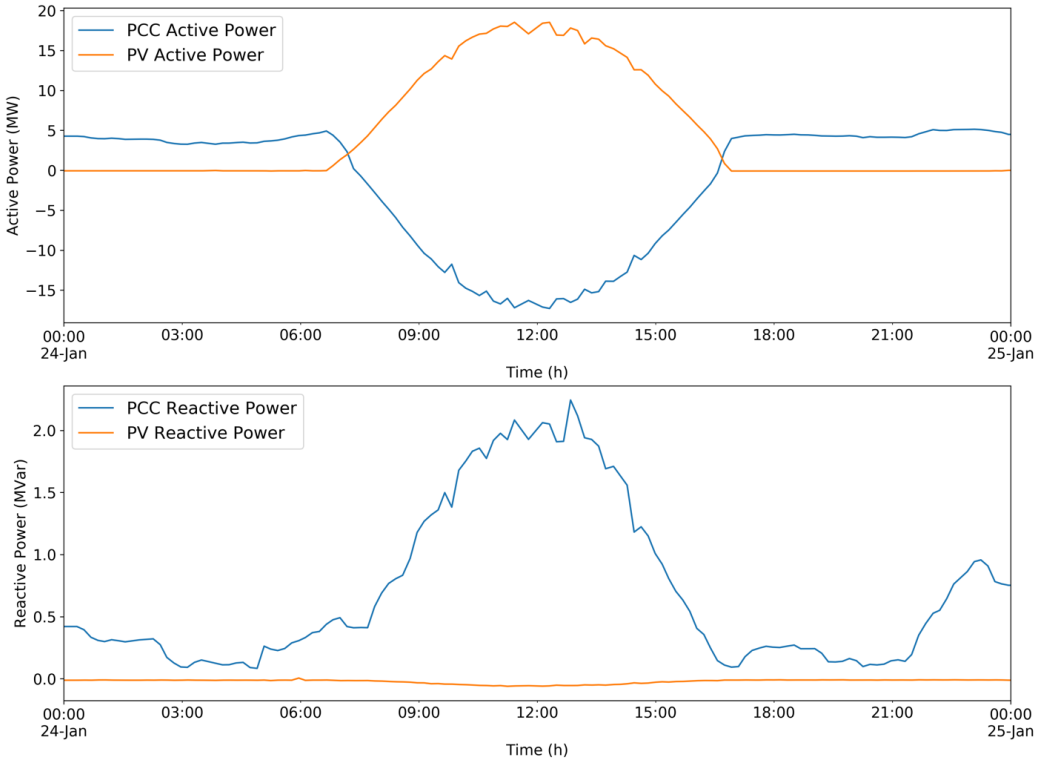

Source: San Diego Gas & Electric Company

Figure A-7: PCC Voltage and Current for Test A1.2

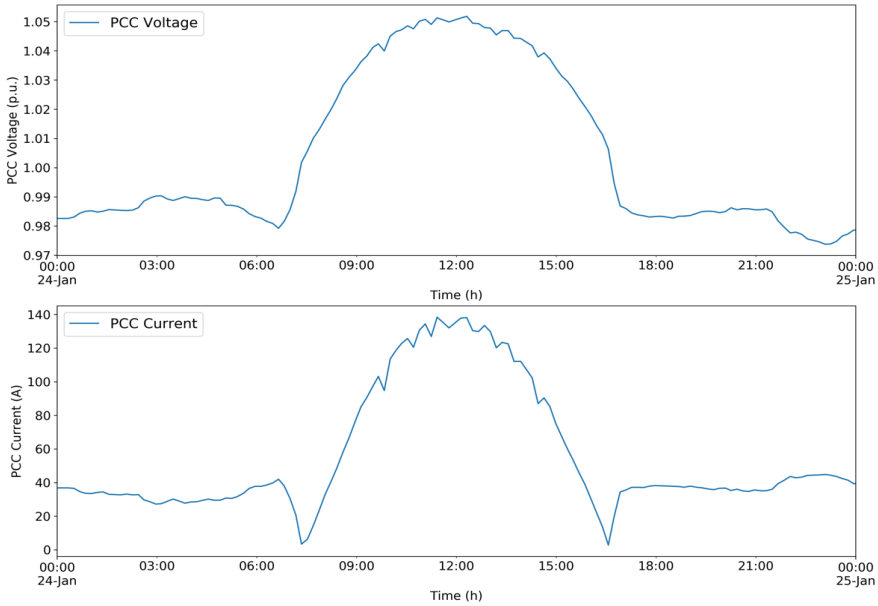

Source: San Diego Gas & Electric Company

The results presented in test case A1 indicate that in the heavily loaded condition and the lightly loaded condition, the PV generation can have significant impact on the microgrid voltage. These two cases present a baseline understanding of the operation of the microgrid without the DERs (except for the 26 MW PV inverter that was operational) and without the microgrid controller.

Results for Test Case A2: Normal Grid-Connected Operation with Dispatch

In this test case, the Wave microgrid controller was set to provide dispatch. The test plan calls for setting up the dispatch of assets to meet one of three objectives – survivability, economic operation, and environmental performance – as defined in Appendix A-1. Dispatch for survivability was achieved by using the Wave microgrid controller's "PQ set points using reliability heuristic" optimizer, which chooses assets based on cost parameters (startup, hourly, operating, stopping, and so on) to achieve the active and reactive set points for PCC power flow. Wave does not have the capability to calculate appropriate power set points to achieve survivability, and therefore NREL manually set the PCC active and reactive power set points to zero and this ensured survivability. In addition, Wave does not offer a solution that optimizes for the economic and environmental objectives and therefore those tests could not be simulated.

Results for Test A2.1: Heavily Loaded Normal Grid-Connected Operation with Dispatch

The load profiles and solar insolation profile are the same as those for Test A1.1. The net power profiles for each distribution circuit within the microgrid are shown in Figure A-8. A line plot of generation and the power flows through the PCC circuit breaker are shown in Figure A-9, and Figure A-10 shows the PCC voltage and current. During the day from 6 am to 6 pm, Wave dispatches the distributed generators and the PV to keep the active and reactive power flow across the PCC close to zero. The Wave dispatches distributed generators 1 and 2 at about 60 percent of their rated power and it dispatches the PV to serve the rest of the load. Even though the PV has the capacity to serve all the load, the distributed generators are dispatched for survivability, that is, to ensure the availability of grid-forming generators in the event of unplanned islanding.

When the PCC power flow is regulated to zero, the voltage at the microgrid PCC is close to unity, compared to a peak of more than 1.04 per unit (p.u.) for the baseline case. The capacitors on circuit 1 switch several times in the early morning hours and the Wave dispatches the PV to attempt to regulate the PCC reactive power flow to zero. The reactive power is regulated to an average value of about zero during the early morning hours, but the Wave is not able to regulate the reactive power to zero between capacitor switching events and therefore the PCC reactive power fluctuates significantly, and this causes fluctuations in the PCC voltage.

At the beginning of the experiment, there is no PV generation, the total load in the microgrid is close to 8 MW, and the Wave dispatches the two generators at their rated power to generate a

total of 3.6 MW. The rest of the load (around 4 MW) is supplied by the grid through the PCC. Therefore, the active power flow through the PCC circuit breaker is nonzero during the early morning hours when there is no PV generation available. The SESS is brought online, but is only dispatched at its minimum charge rate of 100 kW or 10 percent of rated power during the entire day. Once enough PV is available, the Wave is able to regulate the PCC power to zero.

Figure A-8: Line Plot of Net Power Flow for Each Individual Circuit Within the Microgrid for Test A2.1

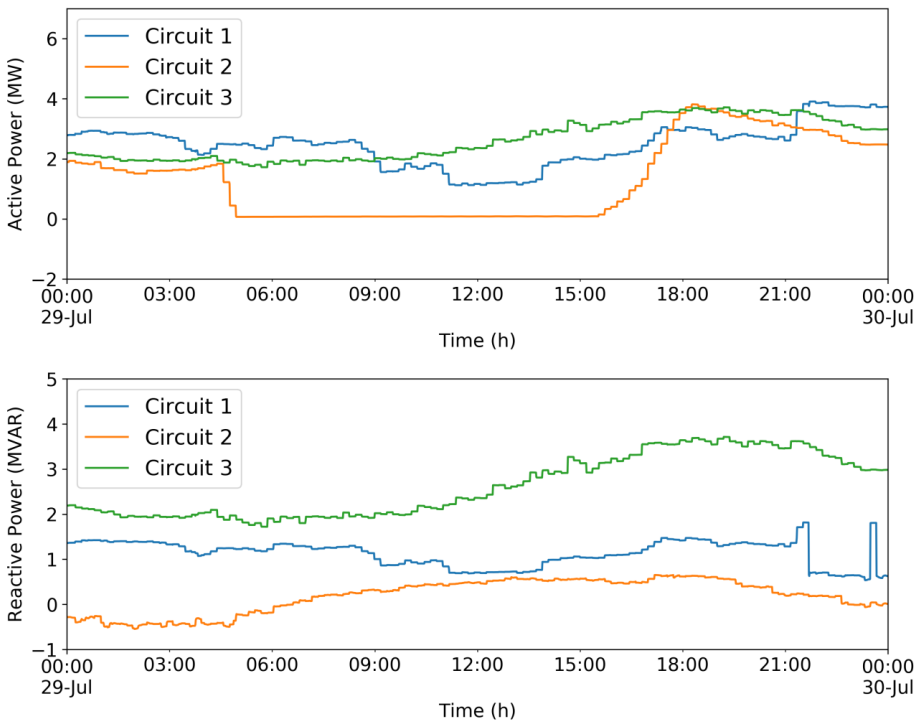

Source: San Diego Gas & Electric Company

Figure A-9: Line Plot of Generation and PCC Power Flow Within the Microgrid for Test Case A2.1

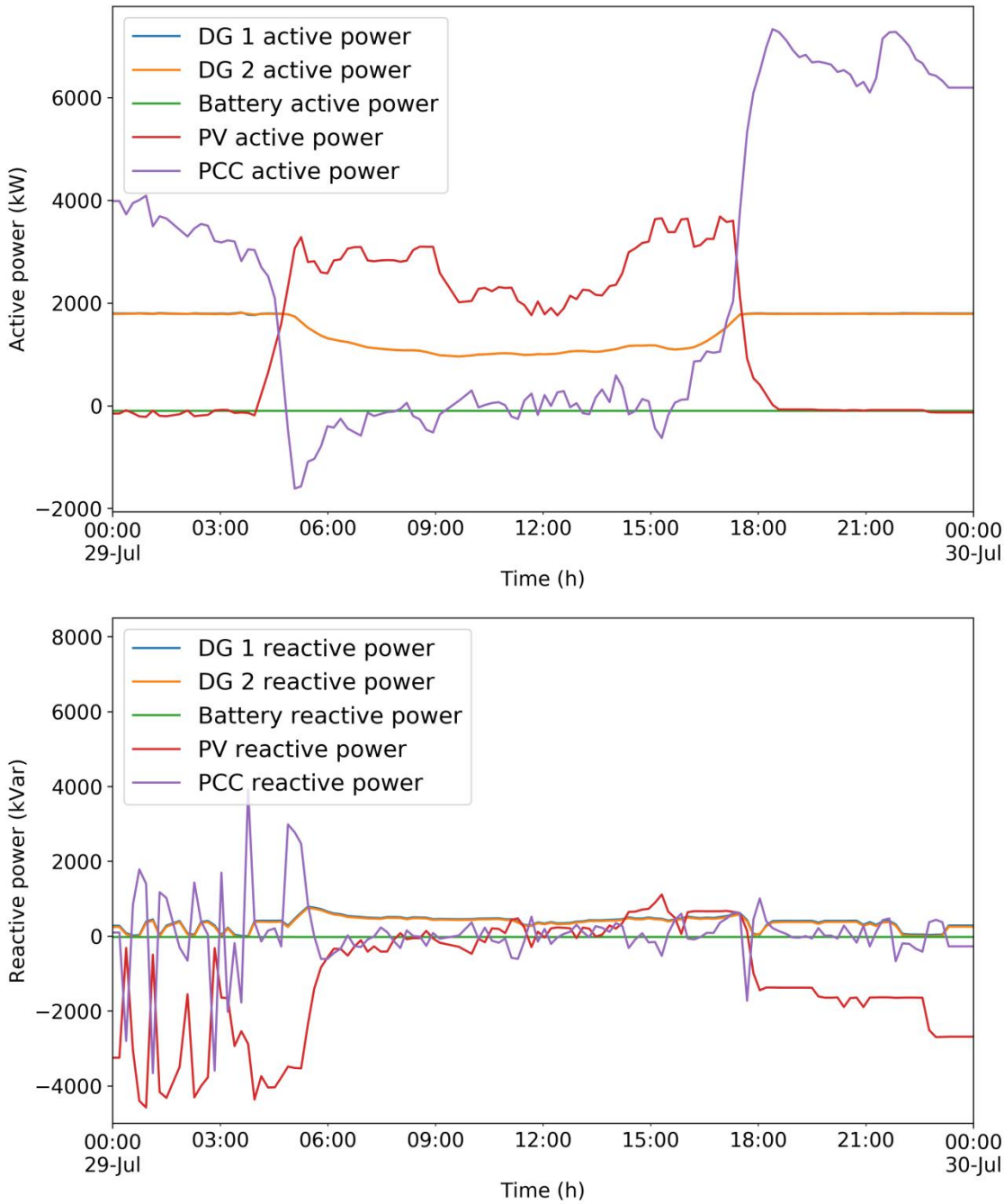

Source: San Diego Gas & Electric Company

Figure A-10: PCC Voltage and Current for Test A2.1

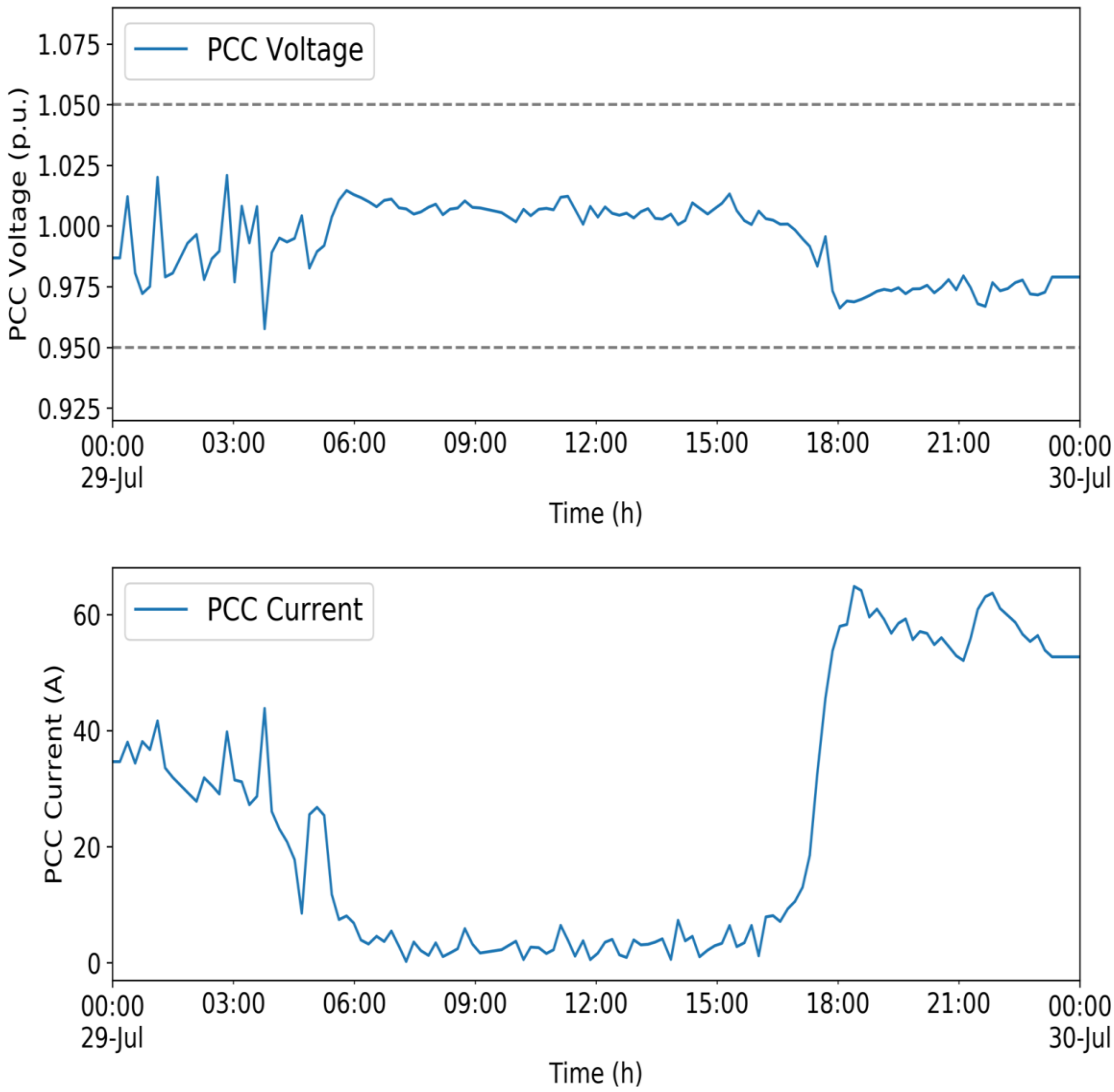

Source: San Diego Gas & Electric Company

The metrics related to survivability, economic operation, and environmental performance were calculated. The survivability metric reflects whether sufficient resources (generation and/or energy storage) are operating and are available to support the microgrid's seamless transition to islanded mode. For the baseline test A1.1, the available generation is zero because the PV inverter cannot operate in grid-forming mode and that results in an infinite value for S_n. Note that if the PV inverter was able to operate in grid-forming mode, S_n would be infinite during the night when no generation is possible.

For the dispatch test A2.1, the survivability metric result in Figure A-11 shows that the microgrid cannot support islanded operation during the night due to insufficient available generation, but it is able to support islanded operation during the day from 5 in the morning to around 7 in the evening when enough PV becomes available.

Figure A-11: Survivability Metric Results for Test A2.1

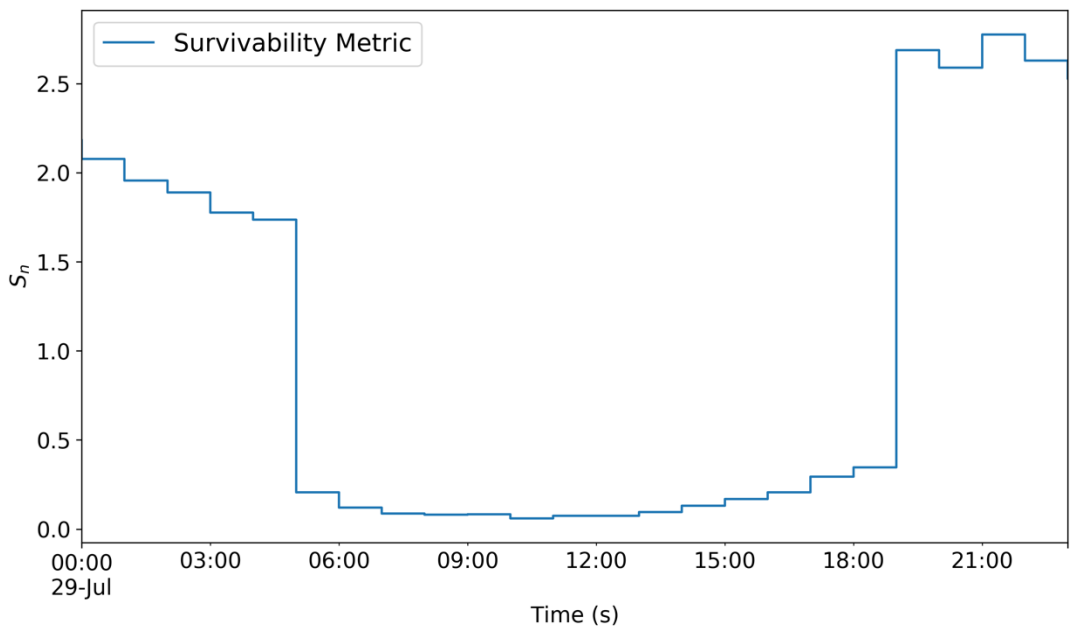

Source: San Diego Gas & Electric Company

The cost metric was calculated using a representative time-of-use rate and the same rate is used for the power consumed and supplied by the microgrid. The comparison of cost by type between tests A1.1 and A2.1 is shown in Figure A-12. The cumulative cost incurred is shown in Figure A-13. The utility cost for Test A2.1, with dispatch, is lower when there is no sun (PV insolation data is "0") because the Wave dispatches the distributed generators. When there is sun, the utility cost for Test A1.1, without dispatch, is negative, because the microgrid exports a significant amount of active power to the main grid. In Test A1.2, the PV is curtailed to regulate the PCC power to zero and therefore the payment for the PV generation is eliminated and the cumulative cost for the test case with no dispatch is less than for the test case with dispatch. However, because cost is not explicitly optimized, this result is not an indication of the Wave microgrid controller's ability to operate a microgrid in the most cost-effective way.

Figure A-12: Cost Results by Type for Test A1.1 (baseline) on the left and Test A2.1 (with dispatch) on the right.

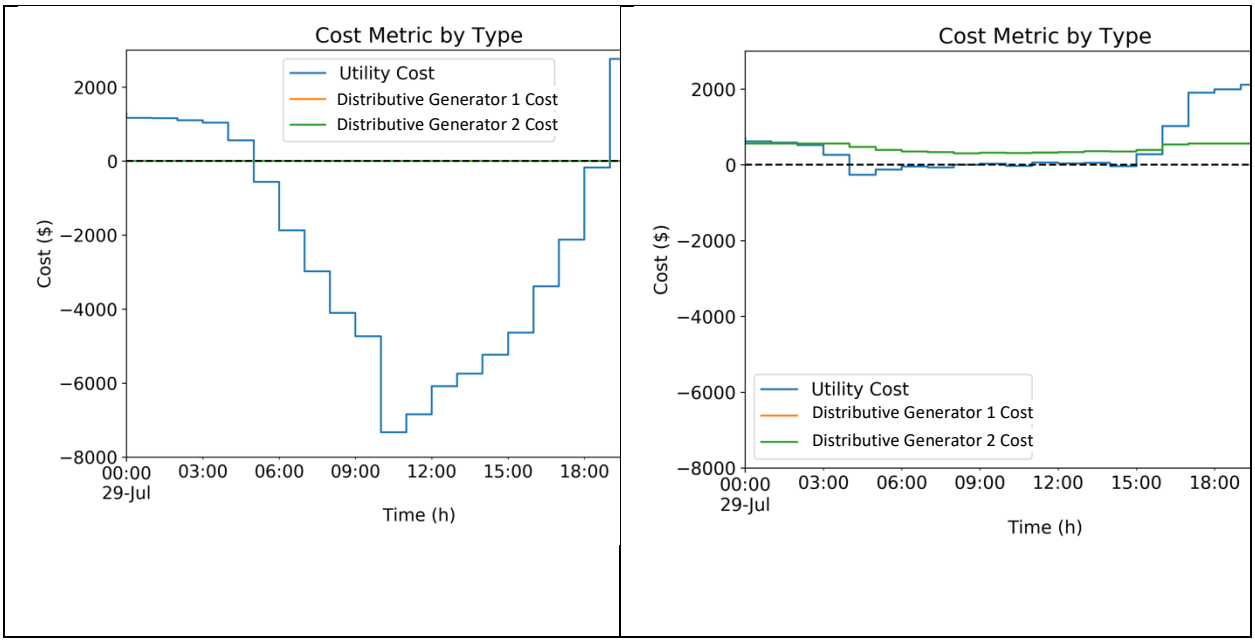

Source: San Diego Gas & Electric Company

Figure A-13: Total and Cumulative Cost Results for Test A1.1 (baseline) on the left and Test A2.1 (with dispatch) on the right

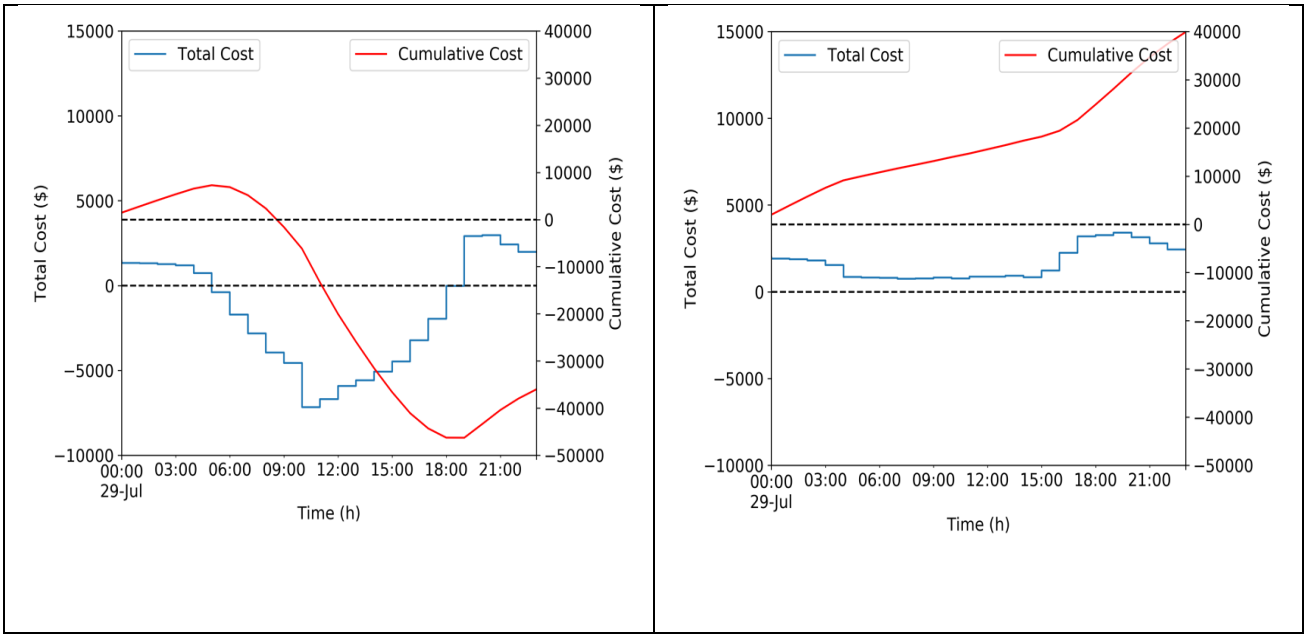

Source: San Diego Gas & Electric Company

Results for Test A2.2: Lightly Loaded Normal Grid-Connected Operation with Dispatch

The load profiles and solar insolation profile are the same as those for Test A1.2. The net power profiles for each distribution circuit within the microgrid are shown in Figure A-14. A line plot of generation and the power flows through the PCC circuit breaker are shown in Figure A-15, and Figure A-16 shows the PCC voltage and current. The distributed generators are dispatched at their rated power at the start of the simulation and because the loads are lower, the generators can regulate the PCC power flow to within 1 MW of zero until about 04:00 when the load increases to above the generators' rated output power. When the sun comes up, the total net load drops and the Wave curtails the PV to regulate the PCC power to zero. The PV is curtailed to below its minimum operating output of 1.5MW and is therefore turned off. The generators are dispatched at about 60 percent of their rated power during the day and the battery is dispatched to absorb the difference between the distributed generator power and the net load.

Figure A-14: Line Plot of Net Power Flow for each Individual Circuit within the Microgrid for Test Case A2.2

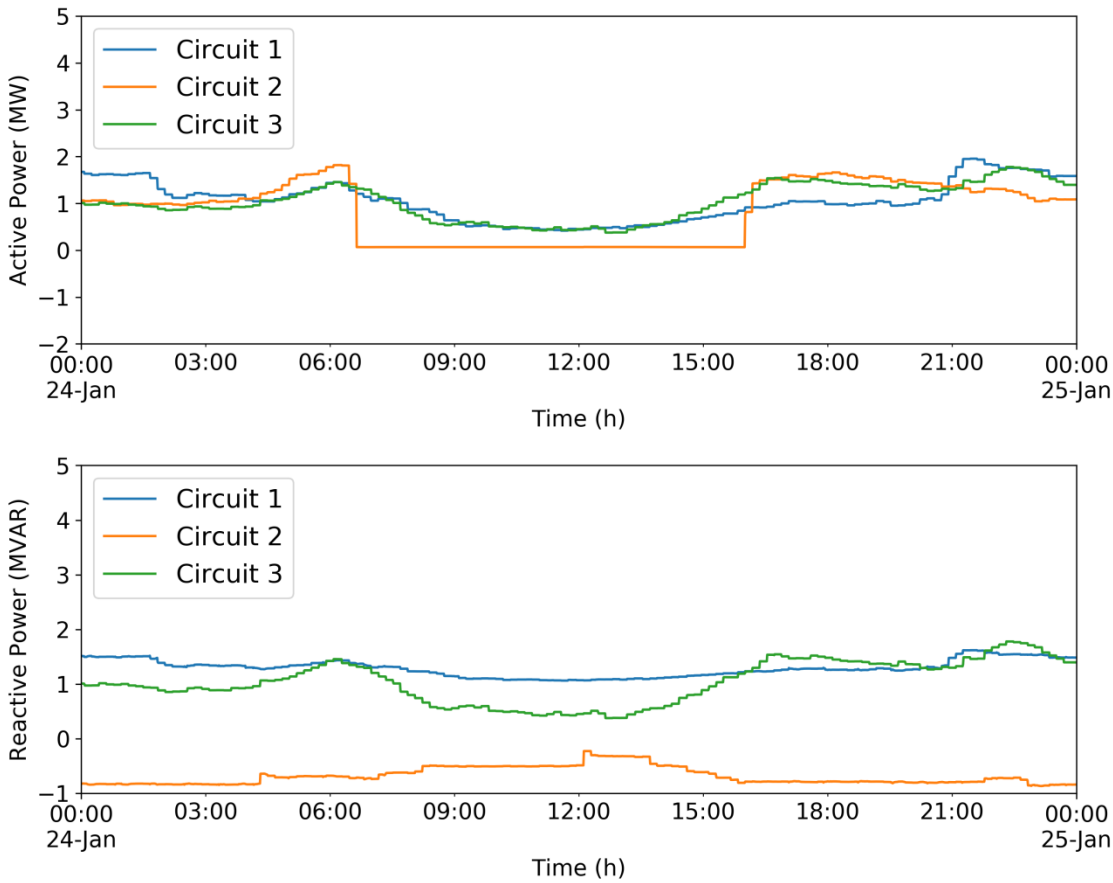

Source: San Diego Gas & Electric Company

Figure A-15: Line Plots of Generation and PCC Power Flow for Test A2.2

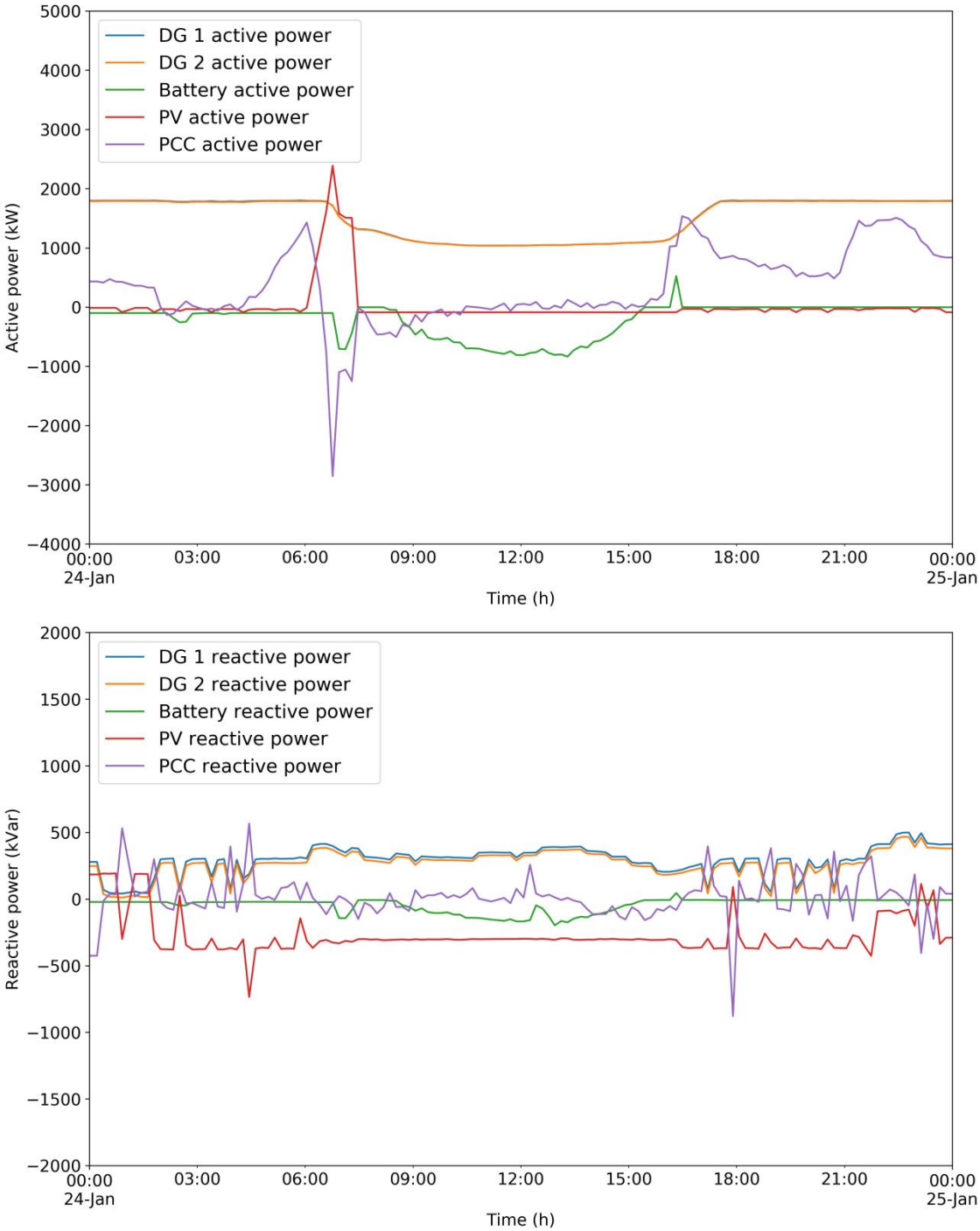

Source: San Diego Gas & Electric Company

Figure A-16: PCC Voltage and Current for Test Case A2.2

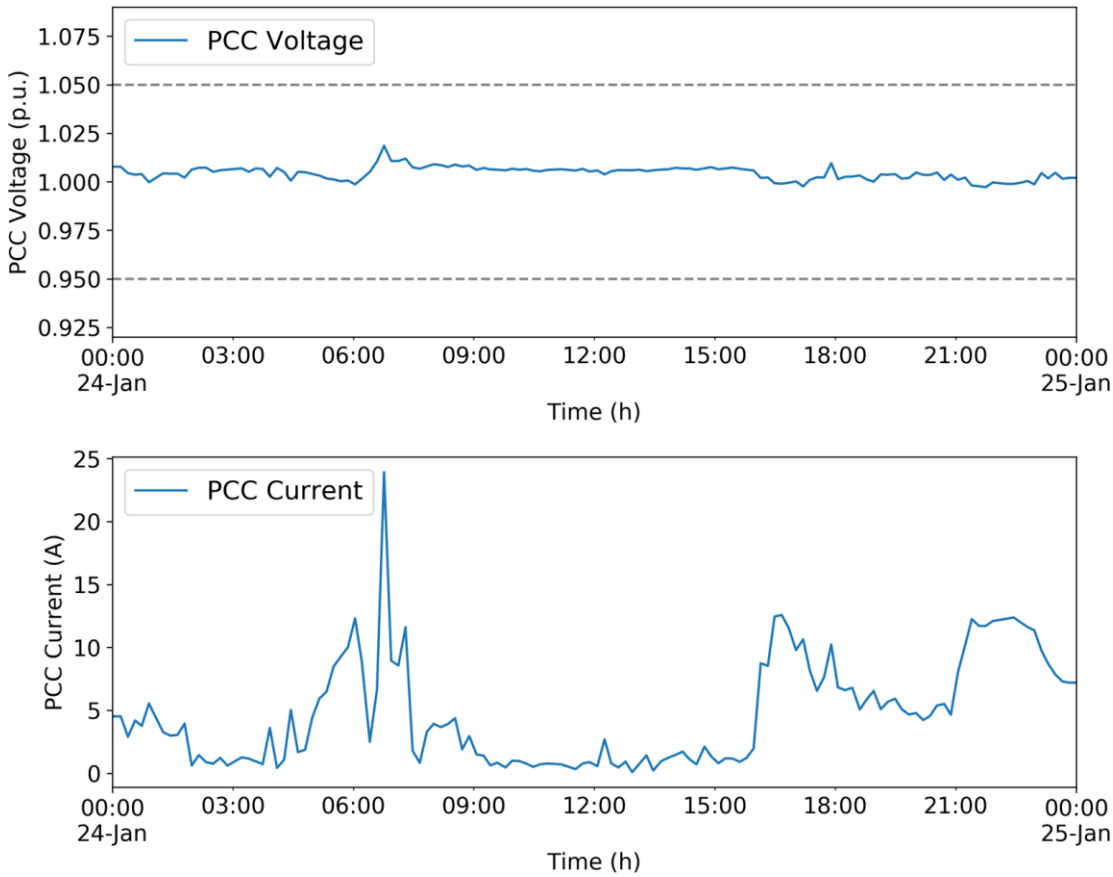

Source: San Diego Gas & Electric Company

Metrics related to survivability, economic operation, and satisfactory environmental performance were also calculated for this test case. The survivability metric S_n for the baseline test A1.2 is infinite because the PV inverter cannot operate in grid-forming mode, so the available generation is zero. For the dispatch test A2.2, the survivability metric result in Figure A-17 shows that the microgrid cannot support islanded operation during the early morning and evening hours because S_n is greater than one when there is no sun. Therefore, some load will have to be curtailed to have sufficient resources to allow for a seamless transition to islanded mode. During the daylight hours, seamless operation to islanded mode is possible. Note that S_n is negative because the total net load is negative during the day.

Figure A-17: Survivability Metric Results for Test A2.2

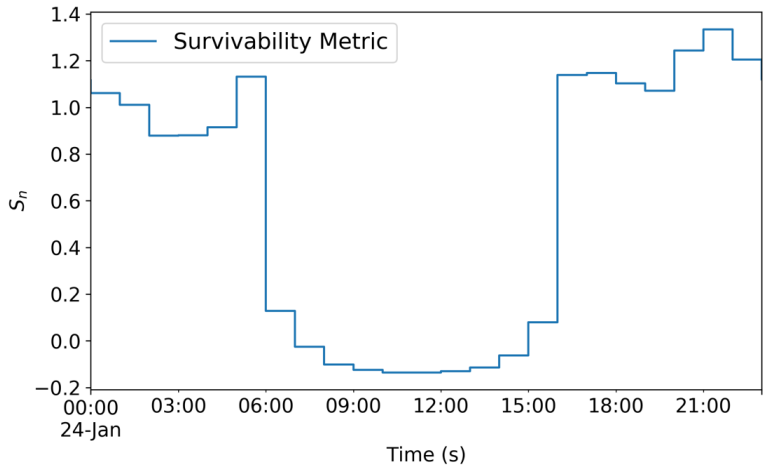

Source: San Diego Gas & Electric Company

The cost results are shown in Figure A-18 and Figure A-19. Similar to the Test Case A1.1 and A2.1, the utility cost for Test Case A2.2, with dispatch, is lower when there is no sun (PV insolation data is "0") because the Wave is regulating the PCC power to zero. When there is sun, the cost for Test Case A1.2, without dispatch, is negative, because the microgrid exports a significant amount of active power to the main grid. The cumulative cost is higher with dispatch enabled in the Wave microgrid controller. This is due to the PV curtailment and the use of distributed generators in test case A2.2. However, because cost is not explicitly optimized, this result is not an indication of the Wave microgrid controller's ability to operate a microgrid in the most cost-effective way.

Figure A-18: Cost Results by Type for Test A1.2 (baseline, left) and Test A2.2 (with dispatch, right)

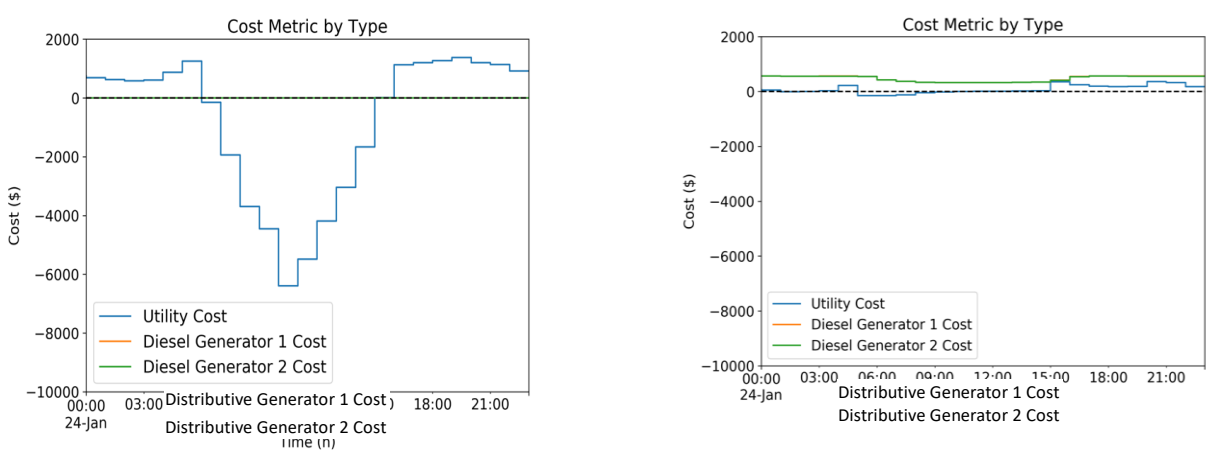

Source: San Diego Gas & Electric Company

Figure A-19: Total and cumulative cost results for Test A1.2 (baseline) on the left and Test A2.2 (with dispatch) on the right

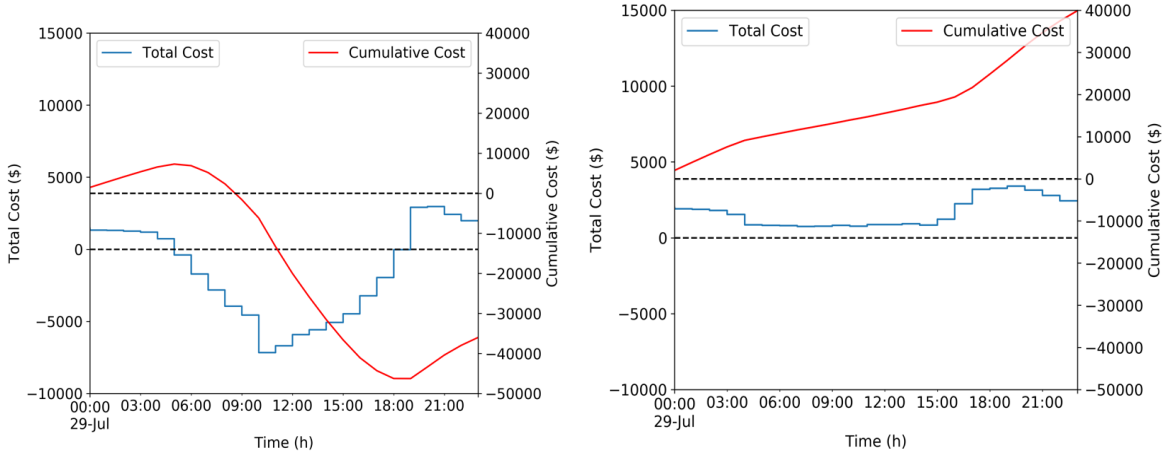

Source: San Diego Gas & Electric Company

Scenario B: Separating the Microgrid from the Utility

The purpose of simulating the scenario of separating the microgrid from the utility was to validate the ability of the Wave microgrid controller to successfully separate the microgrid from the external utility, either as part of a planned operation or in response to an external fault or loss of utility power, and to ensure that it meets the specifications of the functional requirements C1: Disconnection and C4: Protection.

In this scenario, the PCC circuit breakers were initially closed, and the microgrid was connected to the area grid. The operating mode of the distributed generators is determined by the status of the PCC circuit breaker. When the PCC circuit breaker is closed, the distributed generators follow the real power and the power factor set point from the Wave. If the PCC circuit breaker opens, the distributed generators transition to droop control (SDG&E and Wave refer to this mode as “isochronous master”) with a fixed slope of 2.45 percent and they become the voltage and frequency masters. It takes two simulation time steps (400 microseconds) for the simulated distributed generators to transition from power set point-following to voltage/frequency master mode.

In addition, the PCC circuit breaker logic in the simulated PCC circuit breaker was set up so that NREL could observe the response of the Wave for protection. The circuit breaker logic was delayed from taking action for half a cycle once it identifies an abnormal condition. The circuit breaker logic does not include any overcurrent protection. The protection logic opens the PCC circuit breaker and islands the microgrid from the main grid in response to the voltage measured across the circuit breaker.

Results for Test Case B1: Planned Separation

In this test case, the area grid remained within normal operating conditions, and the microgrid separation is part of a planned operation. Two different load and solar insolation conditions were simulated. The initial state-of-charge for the batteries was set to 70 percent for all tests.

The active and reactive power exchange across the PCC was set to zero. Once the Wave controller brought the power flow across the PCC to zero, a request was initiated to island the microgrid. This sends a signal to the RTDS model to open the PCC circuit breaker. Once the circuit breaker opens, the distributed generators need to switch from power set point-following to voltage/frequency master mode. The microgrid was run for more than two minutes to confirm stable operation.

Results for Test B1.1: Planned Separation When Load Exceeds Non-dispatchable Generation

The loads and solar insolation were set to values at 18:00 on July 29. At this time, the net load exceeds generation from the PV plant. Figure A-20 shows simulation results that can be used to evaluate the operation of the PCC circuit breaker controller logic, voltage stability, and stability of PHIL operation during the transient event. The top trace shows the disconnect signal issued by the microgrid controller and the status of the PCC circuit breaker, the trace second from the top shows the voltage on the microgrid side of the PCC breaker, the third trace shows the PCC current, and the bottom two traces show the PHIL current injection of the battery and the PV inverters. To ensure a smooth transition, the Wave reduces the power flow across the PCC to nearly zero prior to islanding by dispatching generation assets to supply the load. This can be seen from the low PCC current shown in Figure A-20. The simulation results of the microgrid voltage and measured battery and PV PHIL currents confirm that a smooth transition was observed during islanding.

Voltage and frequency deviations are important measures of the performance of the microgrid during and after transitions. Voltages and frequencies were measured as described in section 1.1.6 and the results are shown in Figure A-21 over an extended period of time to allow evaluation of stable operation of the microgrid after the transient event. Dotted lines show the limits for steady-state operation to provide perspective on the observed deviations.

A voltage transient occurs at approximately 4,500 seconds, when islanding occurs. After transition to islanded mode, the voltage exhibits smooth dynamics and settles at around 0.99 p.u. During the test, the voltage is maintained within 0.99–1.01 p.u., which meets the steady-state standards from ANSI. The measured frequency at the microgrid PCC also exhibits smooth response during the test.

Results for Test B1.2: Planned Separation When Non-dispatchable Generation Exceeds Load

The loads and solar insolation were set to values at 16:45 on July 29. At this time, generation from the NRG PV plant exceeded net load. The simulation results are shown in Figure A-22. Similar to the previous test, the microgrid controller maintained a power flow close to zero at the PCC prior to islanding, as can be seen from the PCC current measurements. The simulation results of the microgrid voltage and measured battery and PV PHIL currents confirm that a smooth transition was observed during islanding.

Figure A-20: Planned Disconnection Results for Test B1.1

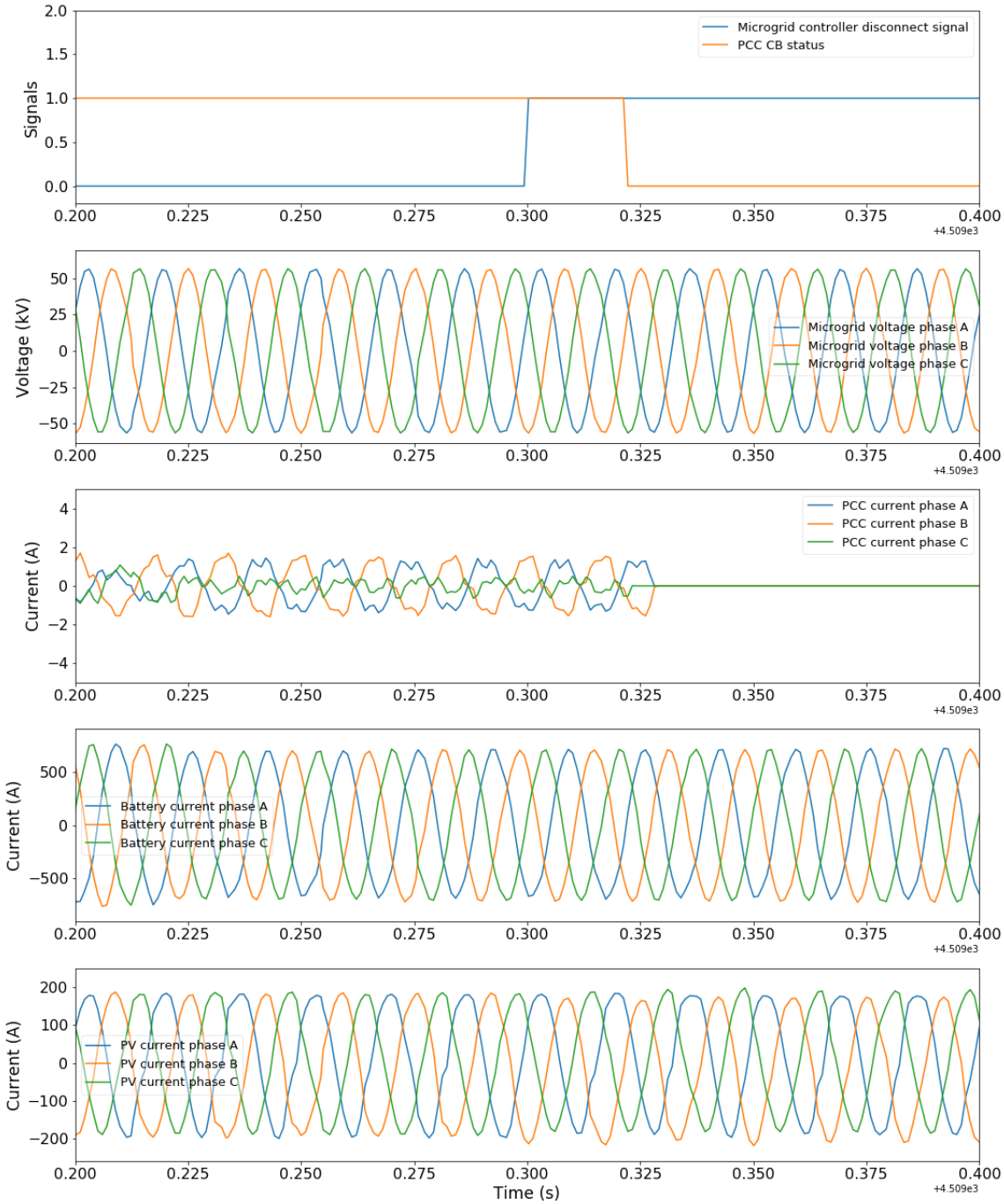

Source: San Diego Gas & Electric Company

Figure A-21: Voltage Amplitude and Frequency during Planned Disconnection (Test B1.1)

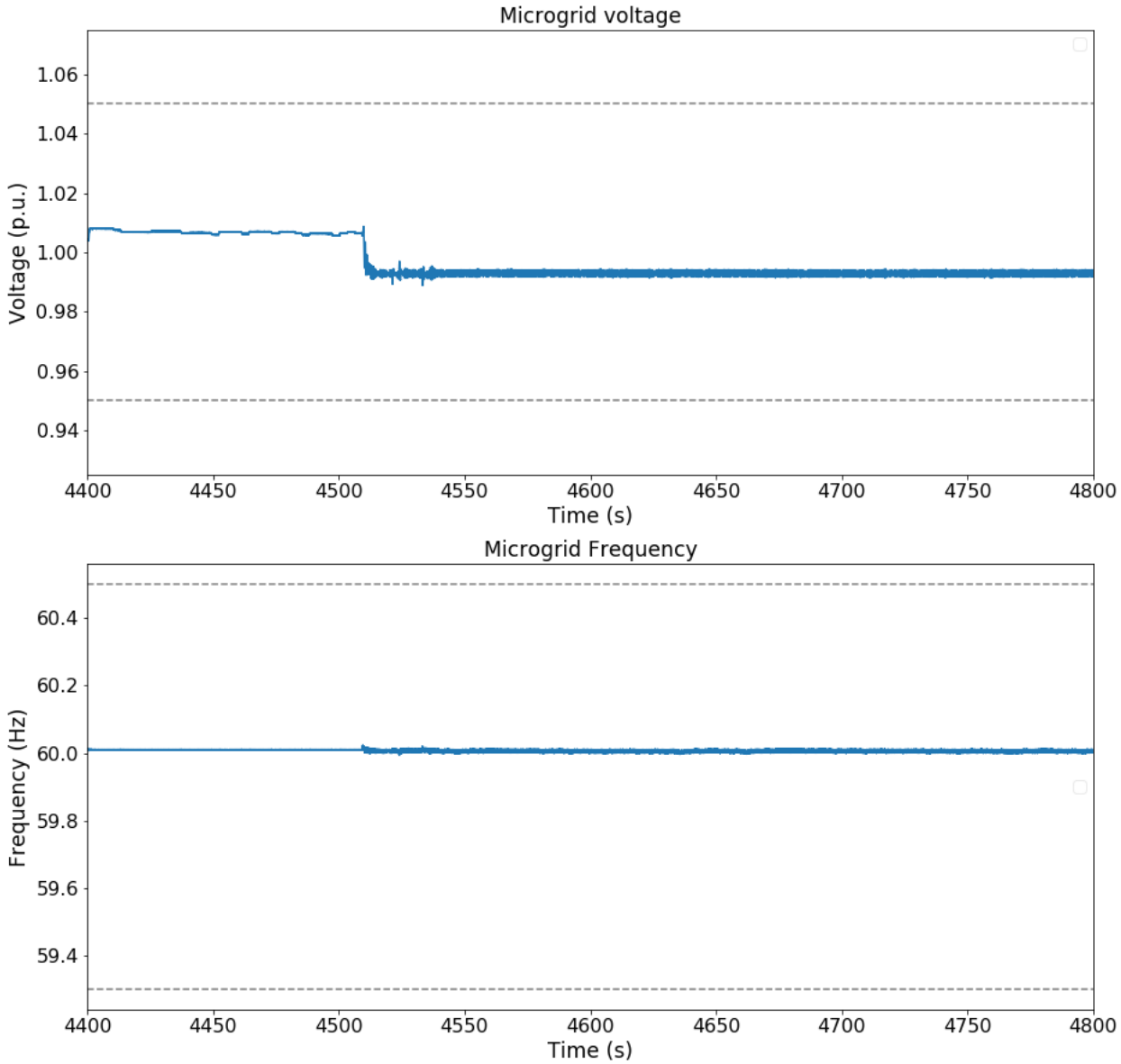

Source: San Diego Gas & Electric Company

Figure A-22: Planned Disconnection Results for Test B1.2

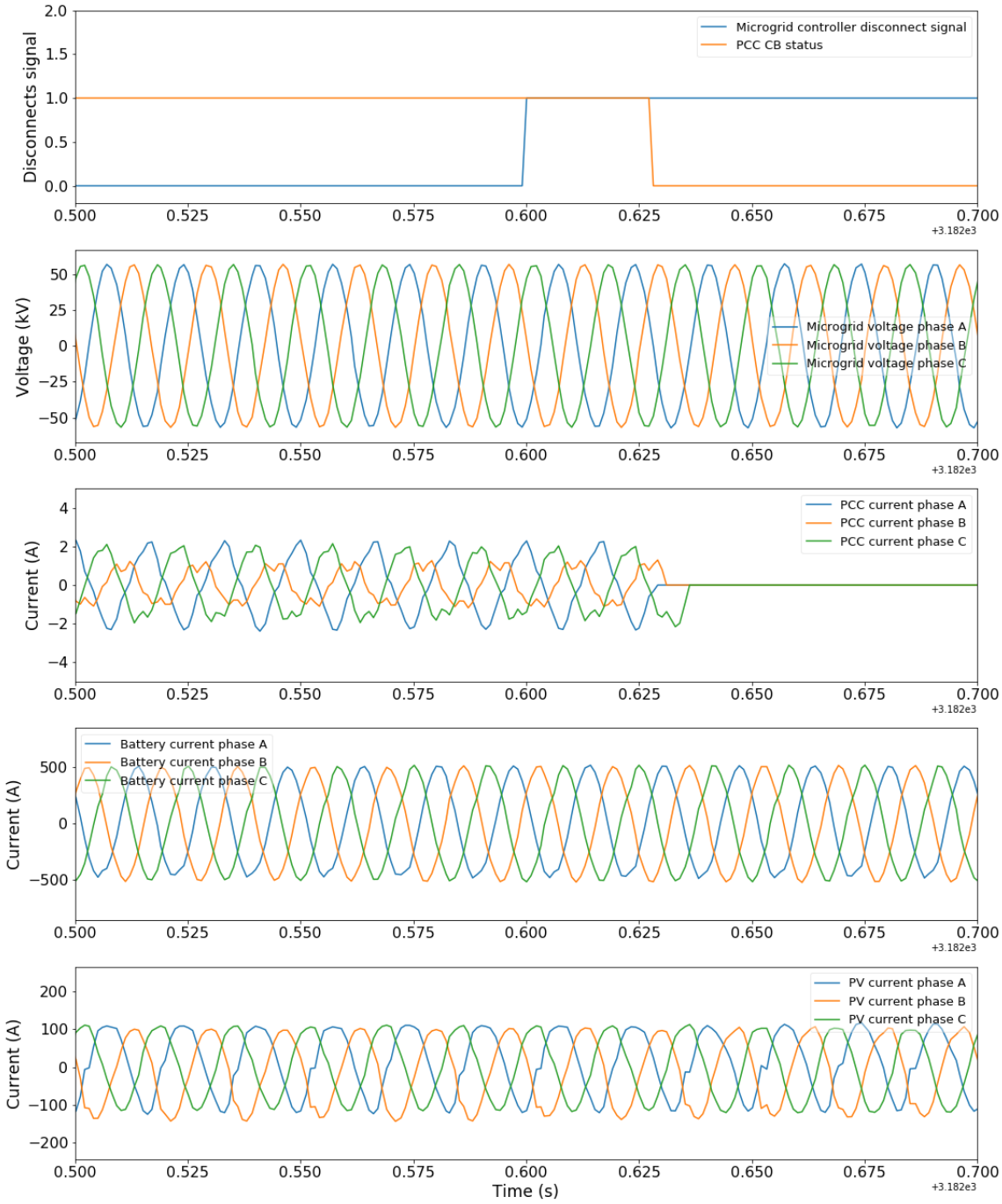

Source: San Diego Gas & Electric Company

Voltage and frequency measurement for this test case is shown in Figure A-23. A voltage transient occurs at approximately 3,180 seconds, when islanding occurs. After the transition to islanded mode, the voltage exhibits some dynamics but settles to around 0.985 p.u. The spikes in the voltage are caused by switching of capacitor banks. During the test, the voltage is maintained within 0.98–1.01 p.u., which meets the steady-state standards from ANSI. The

measured frequency at microgrid PCC exhibits a smooth response during the test, and only a very small overshoot is observed during the islanding moment. The frequency at the PCC meets the steady-state standards from ANSI as well.

Figure A-23: Voltage Magnitude and Frequency during Planned Disconnection (Test B1.2)

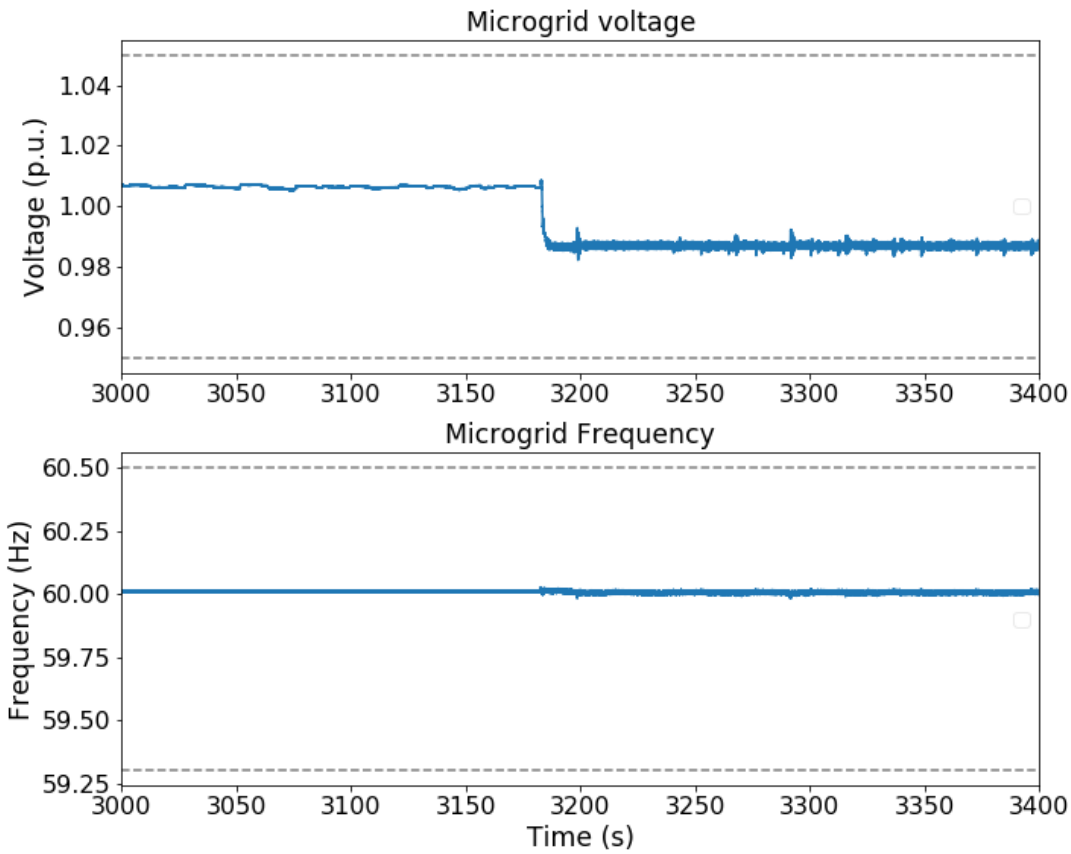

Source: San Diego Gas & Electric Company

Results for Test Case B2: Unplanned Separation Due to Abnormal Voltage/Frequency

In this case, the microgrid was required to perform an emergency separation from the utility in response to abnormal voltage or frequency conditions observed on the area electric power system. The PV plant and BESS were implemented as virtual components in the RTDS.

The loads and solar insolation were set to the same values as for Test B1.1, when net load exceeded generation from the PV plant, and the active and reactive power exchange across the PCC was set to zero so that the load was supplied by the generators. NREL applied nominal frequency and slightly higher than nominal voltage – based on typical field conditions – for at least two times the trip time allowed per the tables in Section 1.1.1.1. Then NREL applied an abnormal voltage/frequency condition to the area electric power system, on phase A only. To validate the operation of the microgrid, the island was run for a minimum of 2 minutes after the transient event.

Results for Test B2.1.1: Unplanned Separation Due to an Overvoltage (115 percent)

The B2.1 cases tested overvoltage events and in test B2.1.1, an overvoltage of 115 percent was applied at the grid side. Simulation results are shown in Figure A-24.

Figure A-24: Unplanned Disconnection Results for Test B2.1.1

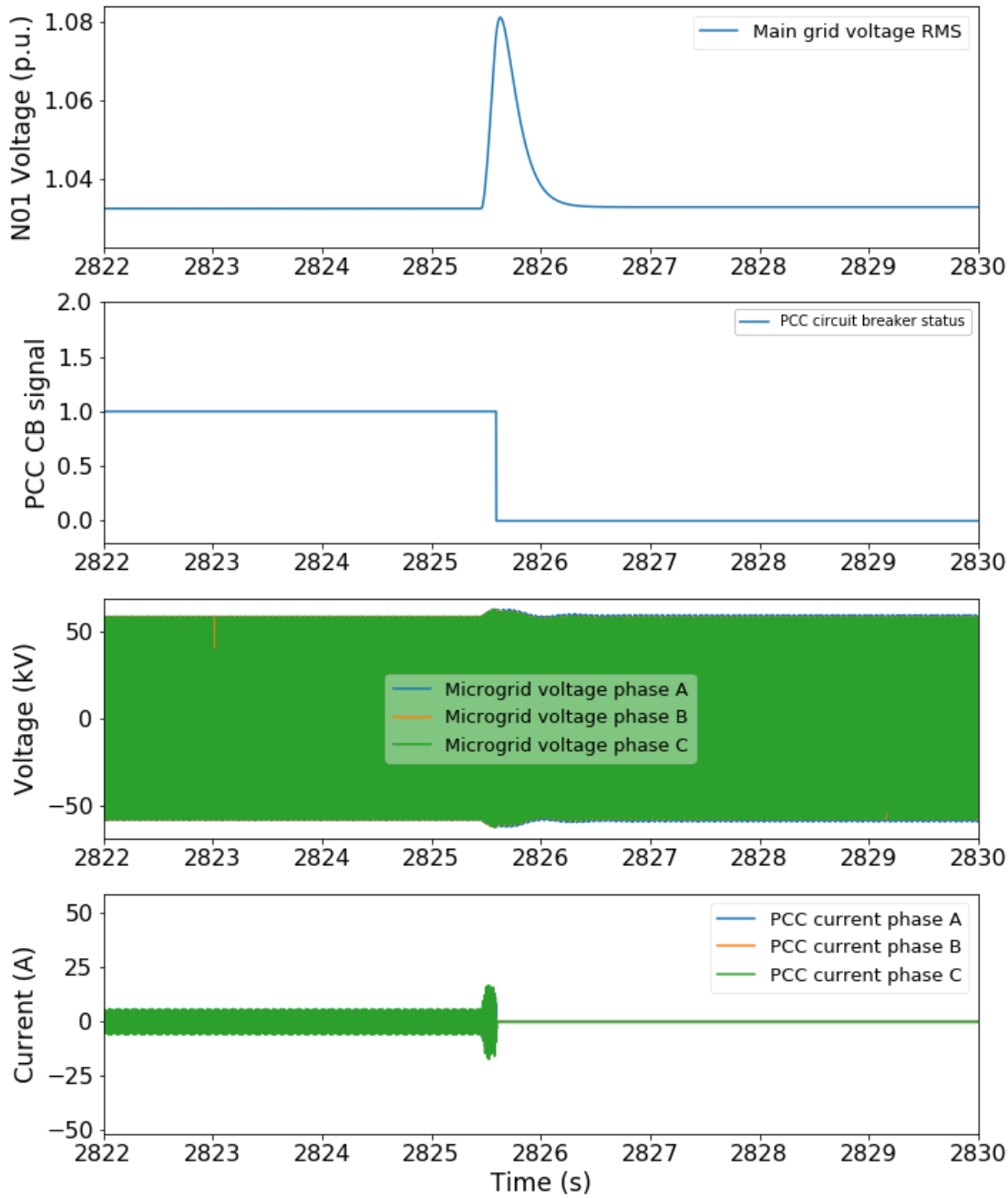

Source: San Diego Gas & Electric Company

The top trace shows the grid side voltage of the PCC circuit breaker (N01). The RMS voltage in the plot shows voltage less the 115 percent because the overvoltage event was applied to only one phase. The Wave did not control any protection devices, which is typical for microgrid controllers; rather, it relied on other assets within the microgrid to provide protection functions. The second trace from the top shows that the PCC breaker logic opened the breaker once the voltage went beyond the normal operating voltage and islanded the microgrid from the utility grid. Once the circuit breaker is open, the distributed generators change to voltage/frequency master mode and regulate the microgrid voltage and frequency. The third trace shows the microgrid voltage waveforms and the bottom trace shows the PCC current that goes to zero after the PCC circuit breaker opens. Figure A-25 shows the microgrid RMS voltage and frequency. The voltage remains high after islanding because the voltage reference for the distributed generators is set to match the grid side voltage.

Figure A-25: Voltage Magnitude and Frequency during Unplanned Disconnection (Test B2.1.1)

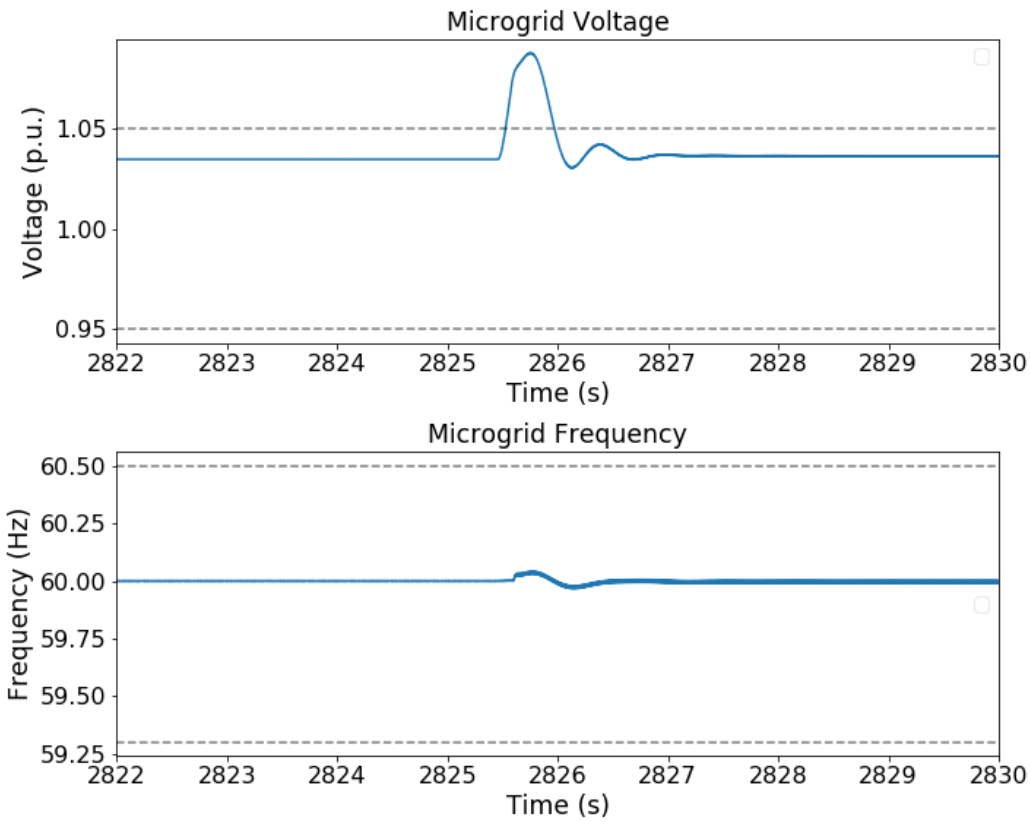

Source: San Diego Gas & Electric Company

Results for Test B2.1.2: Unplanned Separation Due to an Overvoltage (125 percent)

In test B2.1.2, an overvoltage of 125 percent was applied at the grid side, as shown in Figure A-26. The circuit breaker protection tripped once the voltage went beyond the normal operating voltage. This can be observed in Figure A-26 and Figure A-27.

Figure A-26: Unplanned Disconnection Results for Test B2.1.2

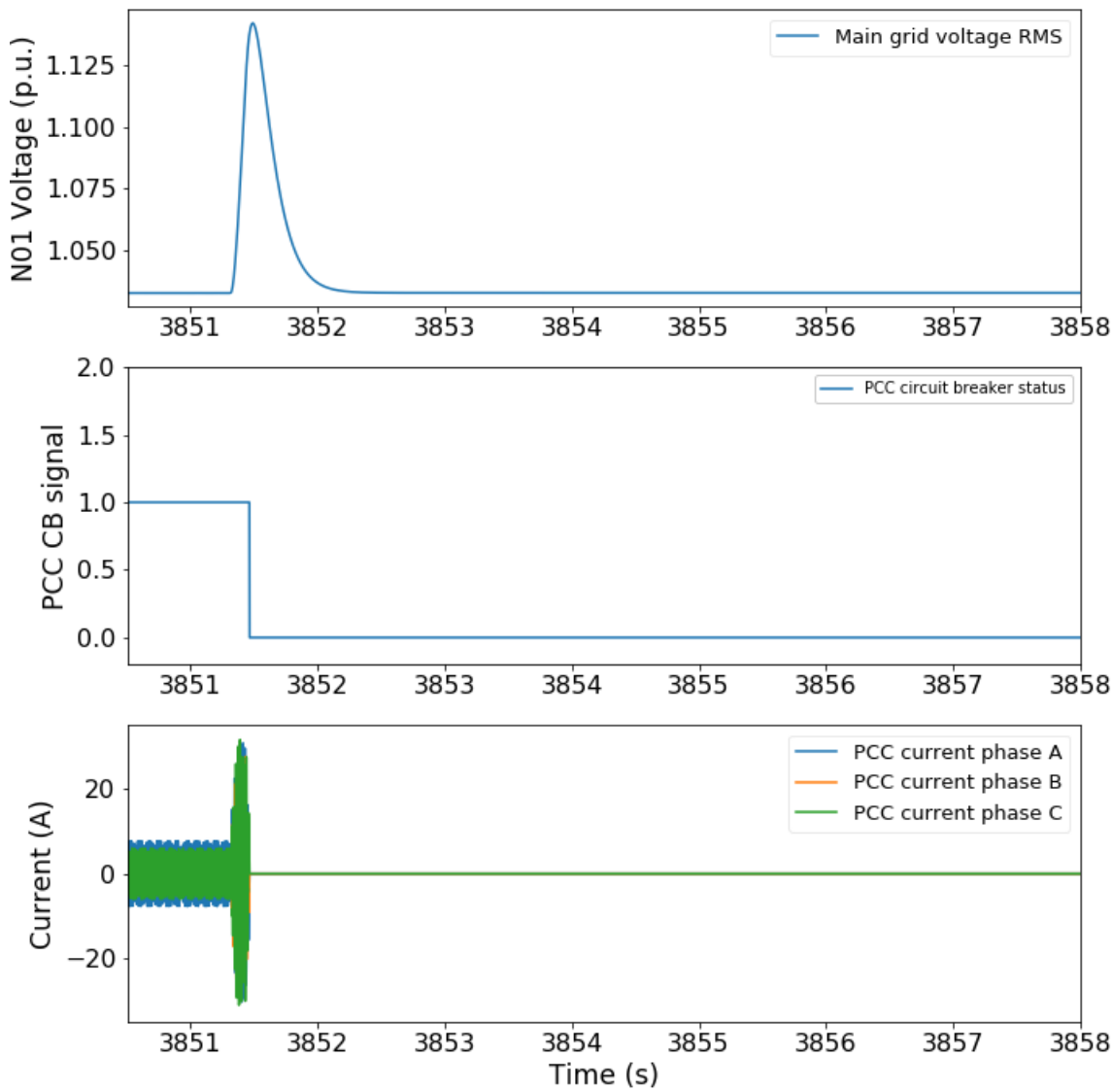

Source: San Diego Gas & Electric Company

Figure A-27: Voltage Magnitude and Frequency during Unplanned Disconnection (Test B2.1.2)

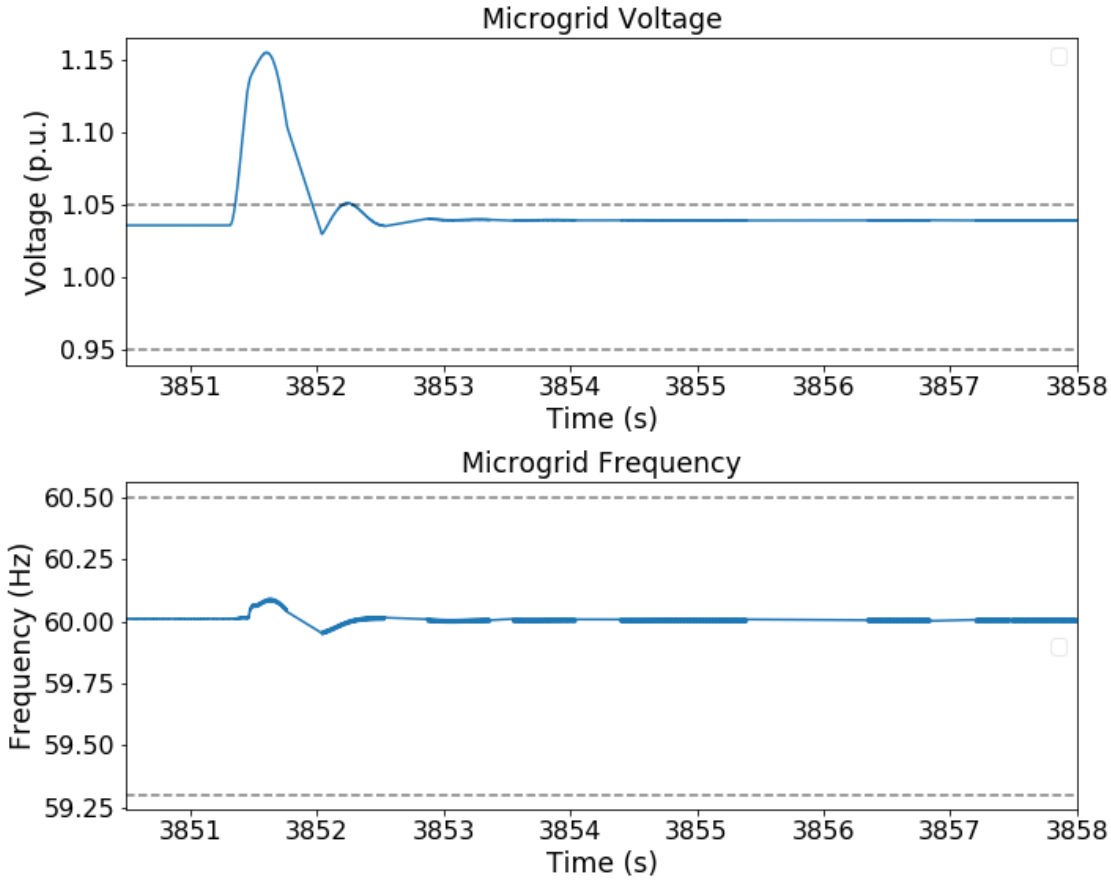

Source: San Diego Gas & Electric Company

Results for Test B2.2.1: Unplanned Separation Due to an Under voltage (75 percent)

In test cases B2.2, under voltage events were tested. In test case B2.2.1, an under voltage of 75 percent was applied at the grid side, as shown in Figure A-28. The RMS voltage in the plot shows voltage close to 85 percent because the under-voltage event was applied to only one phase. The circuit breaker protection tripped once the voltage went beyond the normal operating voltage. This can be observed in Figure A-28 and Figure A-29. When the PCC circuit breaker opens, the microgrid voltage recovers from the event due to the operation of the distributed generators.

Figure A-28: Unplanned Disconnection Results for Test B2.2.1

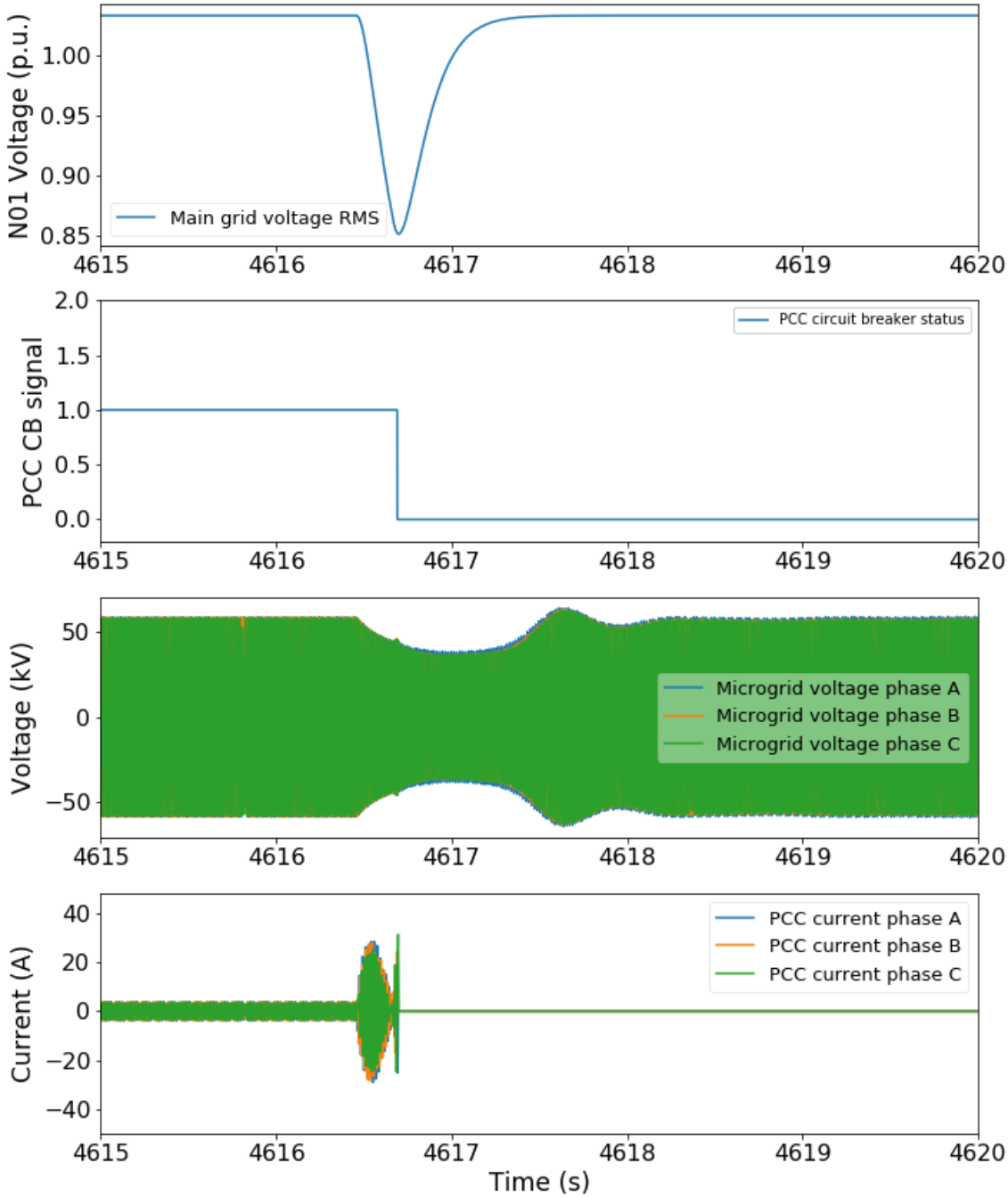

Source: San Diego Gas & Electric Company

Figure A-29: Voltage Magnitude and Frequency during Unplanned Disconnection (Test B2.2.1)

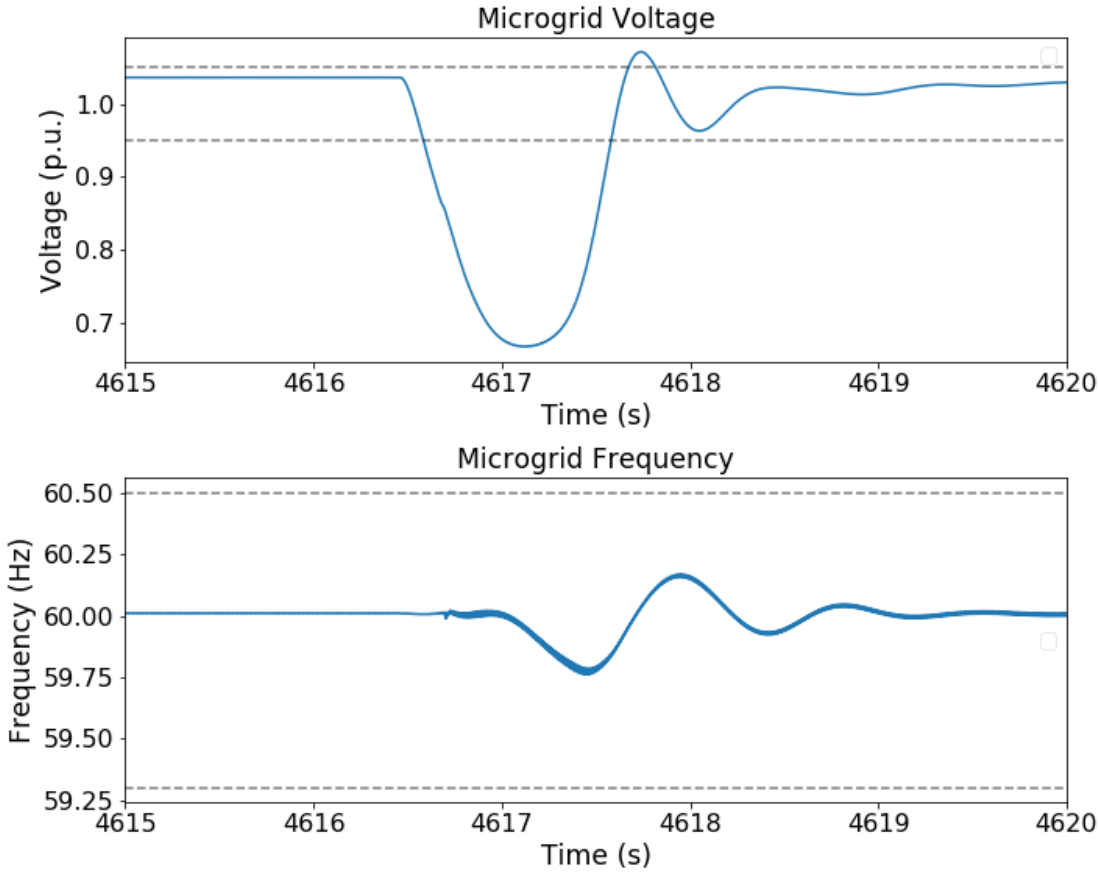

Source: San Diego Gas & Electric Company

Results for Test B2.2.2: Unplanned Separation Due to an Under voltage (50 percent)

In test case B2.2.2, an under voltage of 50 percent was applied at the grid side as shown in Figure A-30. The circuit breaker protection tripped once the voltage went beyond the normal operating voltage. This can be observed in Figure A-30 and Figure A-31. When the PCC circuit breaker opens, the microgrid voltage recovers from the event due to the operation of the distributed generators.

Figure A-30: Unplanned Disconnection Results for Test B2.2.2

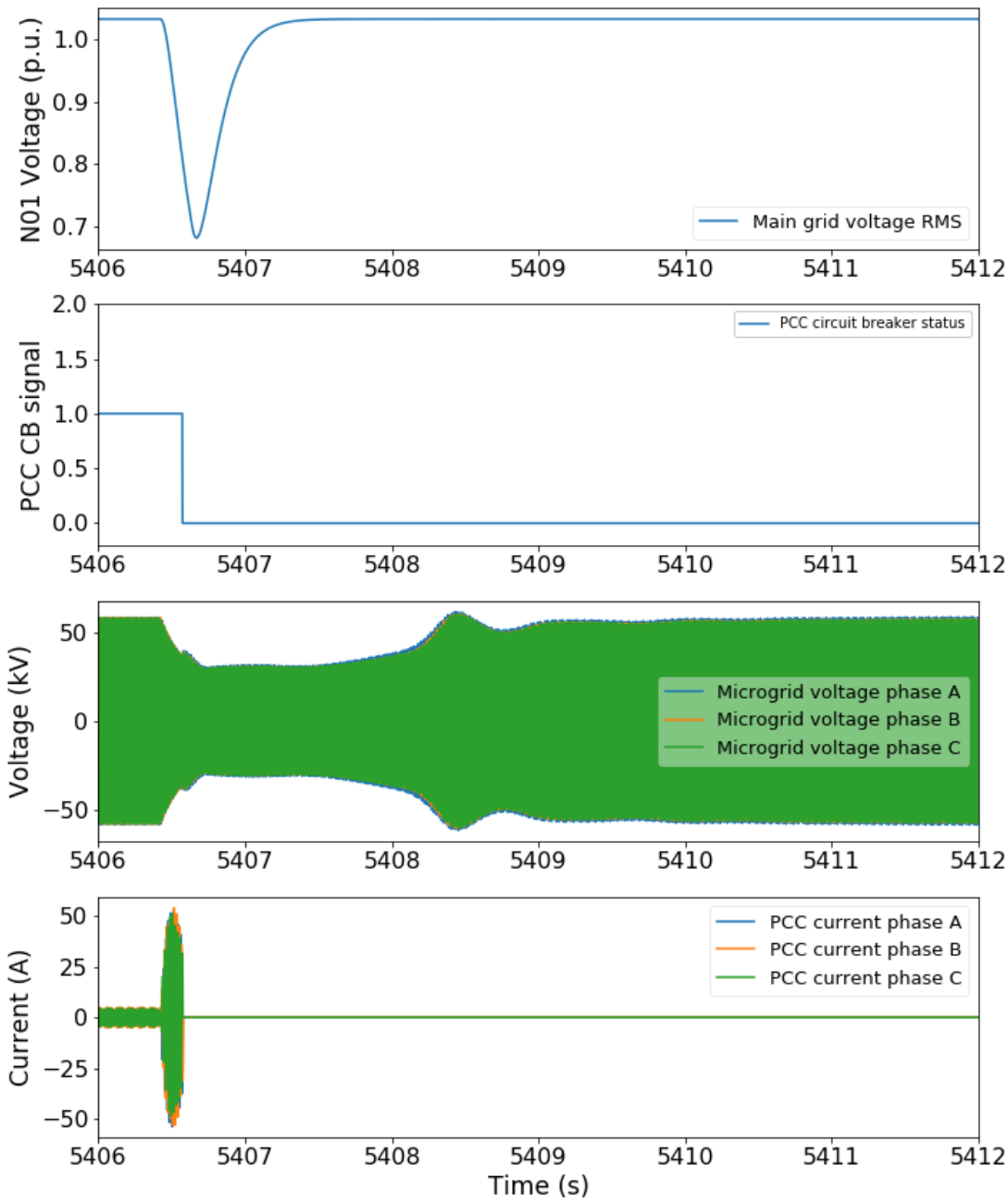

Source: San Diego Gas & Electric Company

Figure A-31: Voltage Magnitude and Frequency during Unplanned Disconnection (Test B2.2.2)

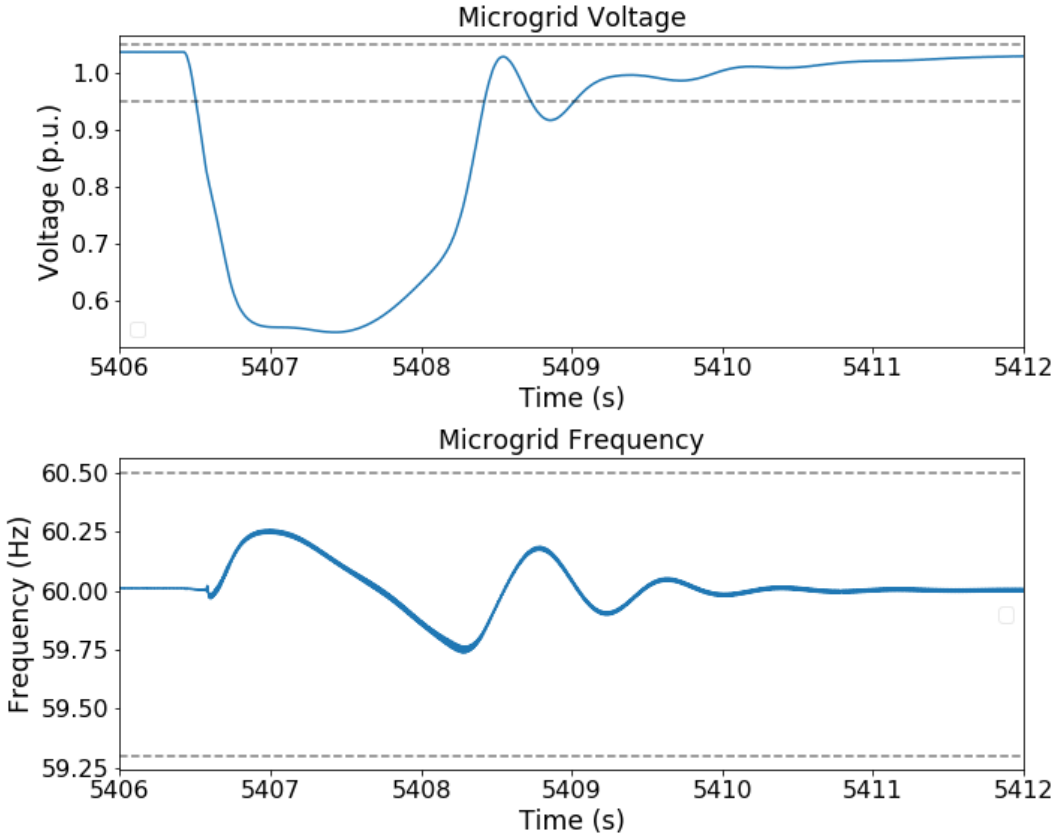

Source: San Diego Gas & Electric Company

Results for Test B2.2.3: Unplanned Separation Due to an Under voltage (43 percent)

In test B2.2.3, an under voltage of 43 percent was applied at the grid side as shown in Figure A-32. The circuit breaker protection tripped once the voltage went below the normal operating voltage. This can be observed in Figure A-32 and Figure A-33. When the PCC circuit breaker opens, the microgrid voltage recovers from the event due to the operation of the distributed generators.

Figure A-32: Unplanned Disconnection Results for Test B2.2.3

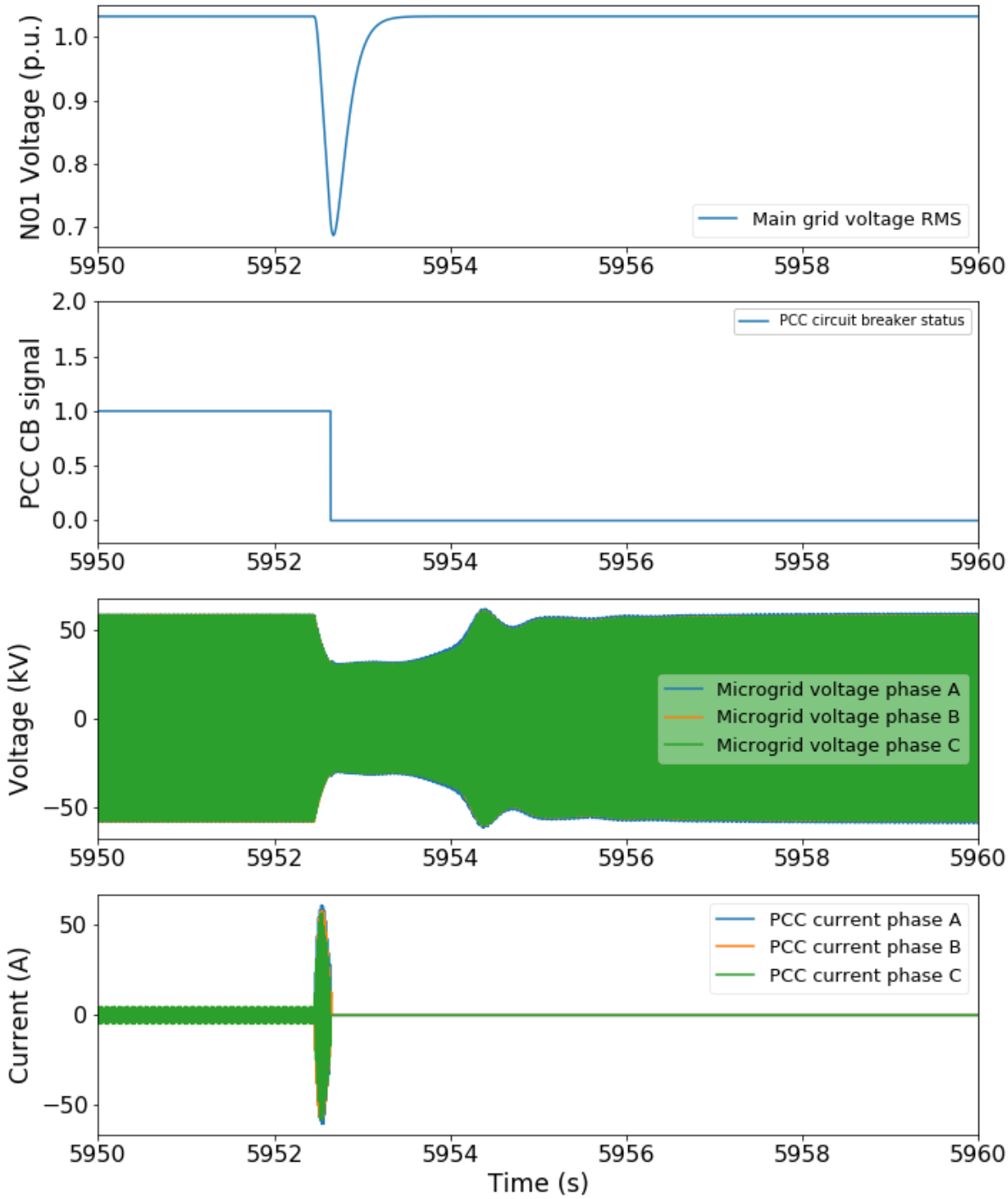

Source: San Diego Gas & Electric Company

Figure A-33: Voltage Magnitude and Frequency during Unplanned Disconnection (Test B2.2.3)

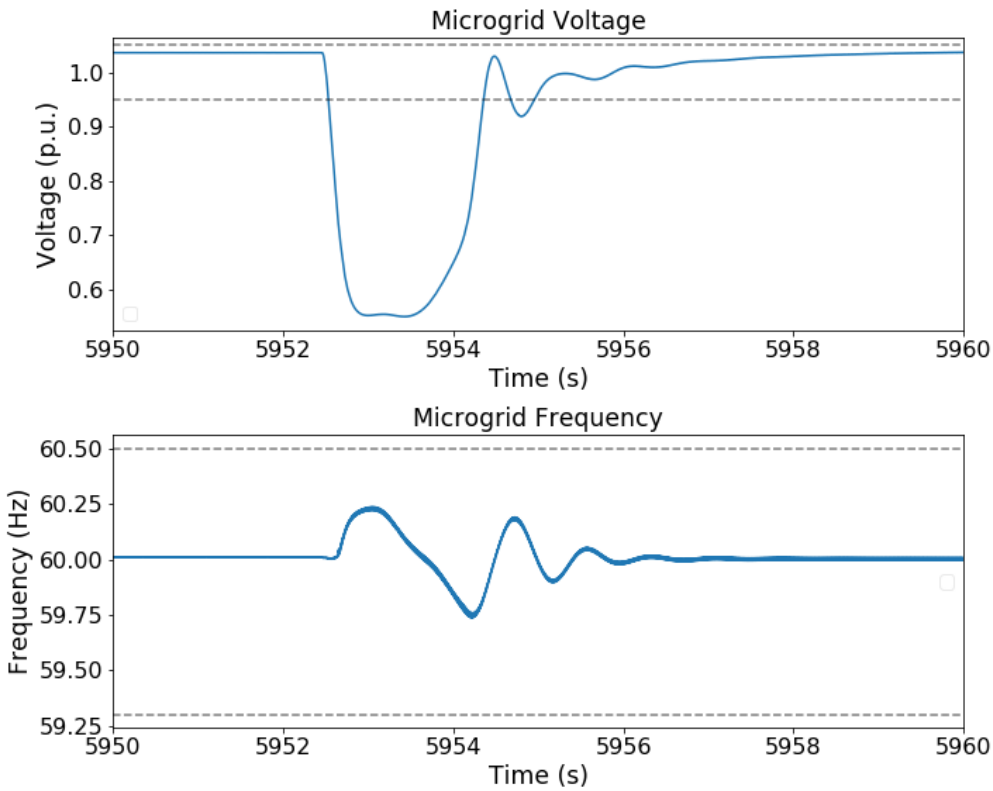

Source: San Diego Gas & Electric Company

Results for Test Case B3: Unplanned Separation Due to an External Fault

In this case, the controller should separate the microgrid from the utility in response to an external fault. Two different load and insolation conditions were simulated. The Wave controller was set to dispatch according to "PQ set points using reliability heuristic" optimizer, and the active and reactive power exchange across the PCC was set to zero. Then an external single-phase-to-ground fault was applied on Phase A, electrically close to the PCC, for one cycle. Similar to test cases B1 and B2, the model was run for a minimum of two minutes after islanding to observe stable operation of the microgrid.

According to the test plan, the ESIF local CHIL/PHIL setup was used (Figure A-34). However, this test case involves applying a fault on the grid side and the fault voltage might damage the grid simulators. For this reason, for the fault scenarios, the PHIL setup was not used for the PV and battery inverter. The inverters were therefore simulated in RSCAD, as shown in Figure A-1. Additionally, NREL observed that the generator controller hardware tripped the distributed generators after the fault was cleared. This was erroneous behavior on the part of the controller and it also did not report an error for opening the distributed generator circuit breaker.

Figure A-34: Borrego Springs ESIF Local CHIL Setup

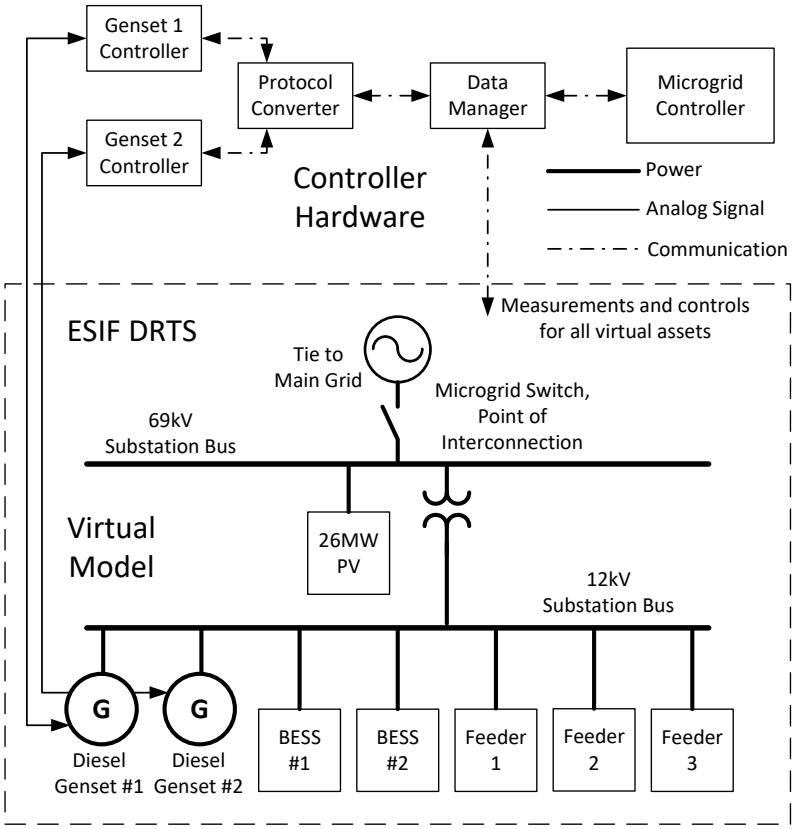

Source: San Diego Gas & Electric Company

Figure A-35 and Figure A-36 show the results of Test B3.1 with the distributed generator controller hardware. The fault was applied on the grid side on phase A at 1460.63 seconds and it was cleared in half a cycle. The PCC circuit breaker opened and the microgrid was sustained for another few cycles, but the distributed generator controller opened the distributed generators' terminal circuit breakers at approximately 1460.75 seconds. Therefore, the B3 tests were executed with the simulated distributed generator controller in the RSCAD model.

Figure A-35: Unplanned Disconnection Results for Test B3.1 with Generator Controller Hardware

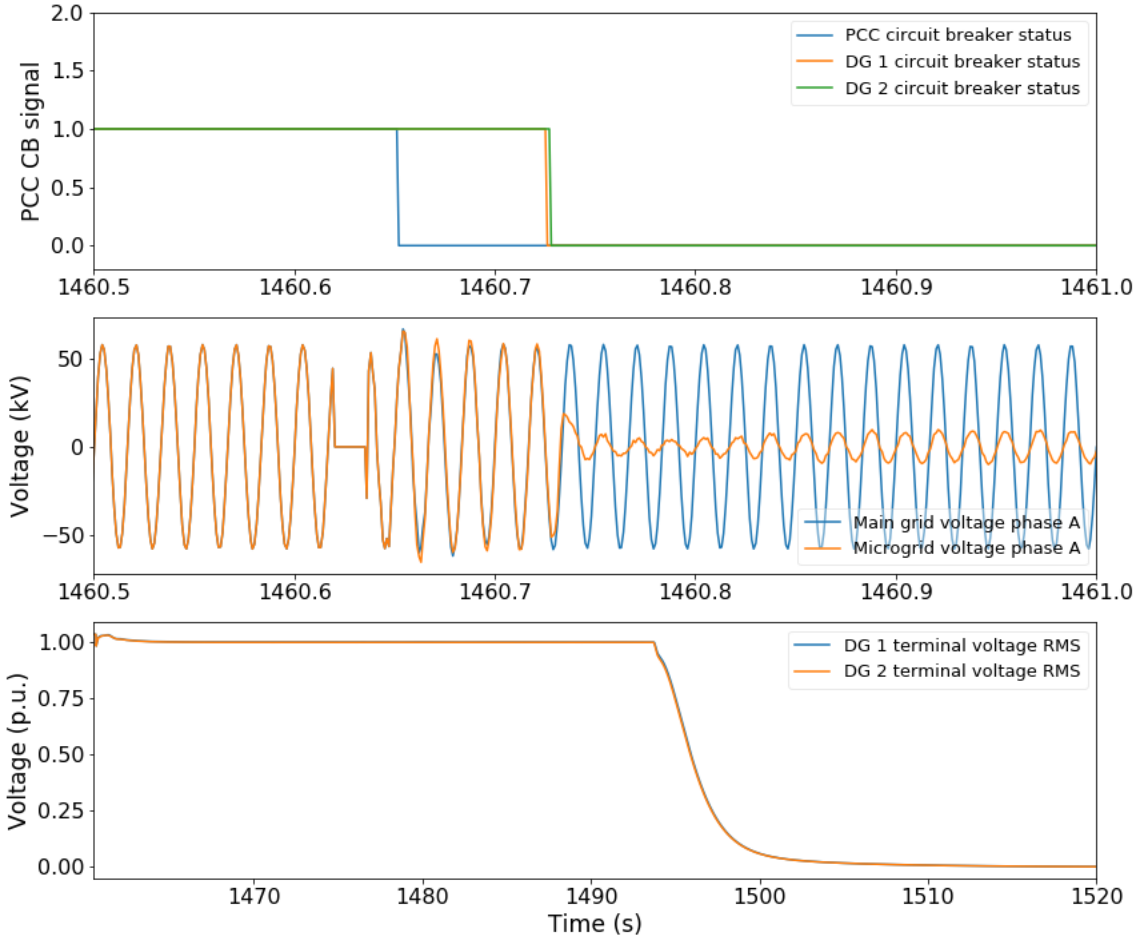

Source: San Diego Gas & Electric Company

Figure A-36: Microgrid Voltage and Frequency at PCC for Test B3.1 with Generator Controller Hardware

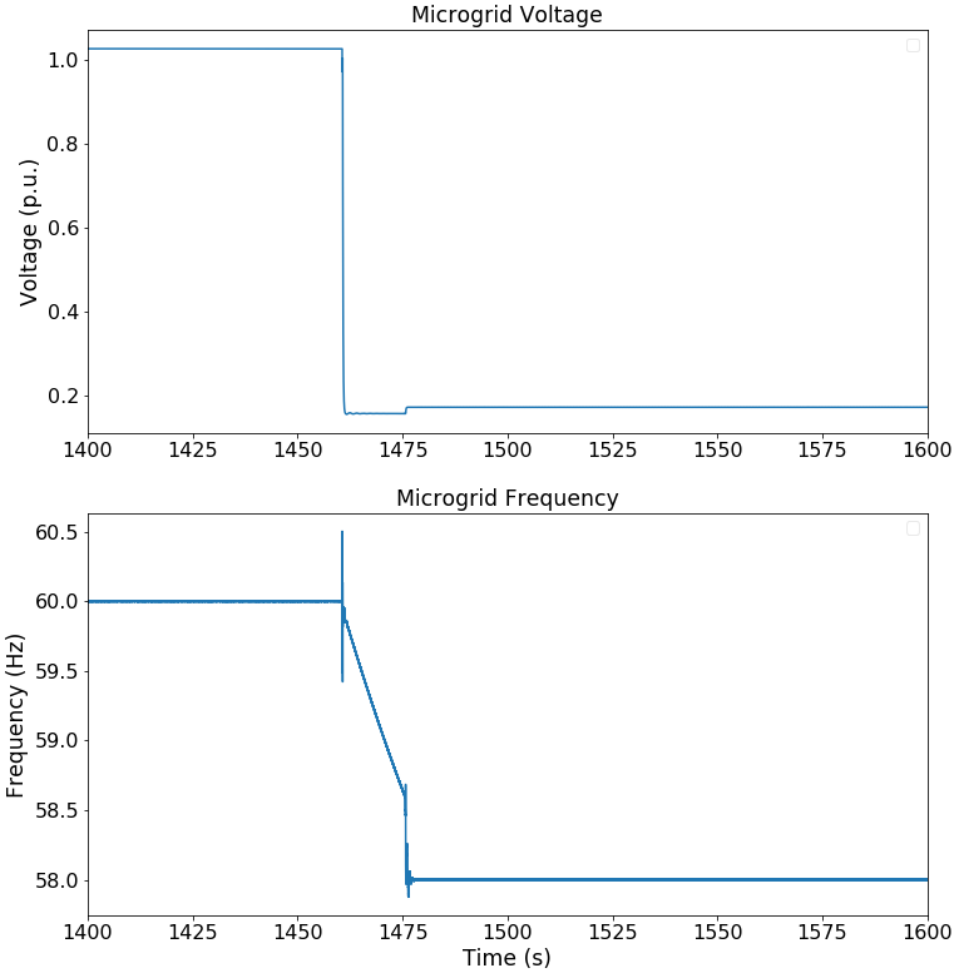

Source: San Diego Gas & Electric Company

Results for Test B3.1: Unplanned Separation Due to an External Fault with High Load and Low Non-dispatchable Generation

The loads and solar insolation were set to the same values as for Test B1.1 when the net load was high and generation from the NRG PV plant was low. Simulation results for Test Case B3.1 are shown in Figure A-37 and Figure A-38. The Wave did not control any protection devices, which is typical for microgrid controllers; rather, it relied on other assets within the microgrid to provide protection functions. Therefore, the PCC circuit breaker protection logic opened the PCC breaker after observing the fault. Once the PCC circuit breaker opened, the mode of operation of the distributed generators was changed to voltage/frequency master. The top trace shows the disconnect signal issued by the PCC circuit breaker controller because of the fault. The trace second from the top shows the voltage on the microgrid side of the PCC breaker. The bottom trace shows the current through the PCC breaker. The microgrid operated in islanded mode for several minutes.

Figure A-37: Unplanned Disconnection Results for Test B3.1

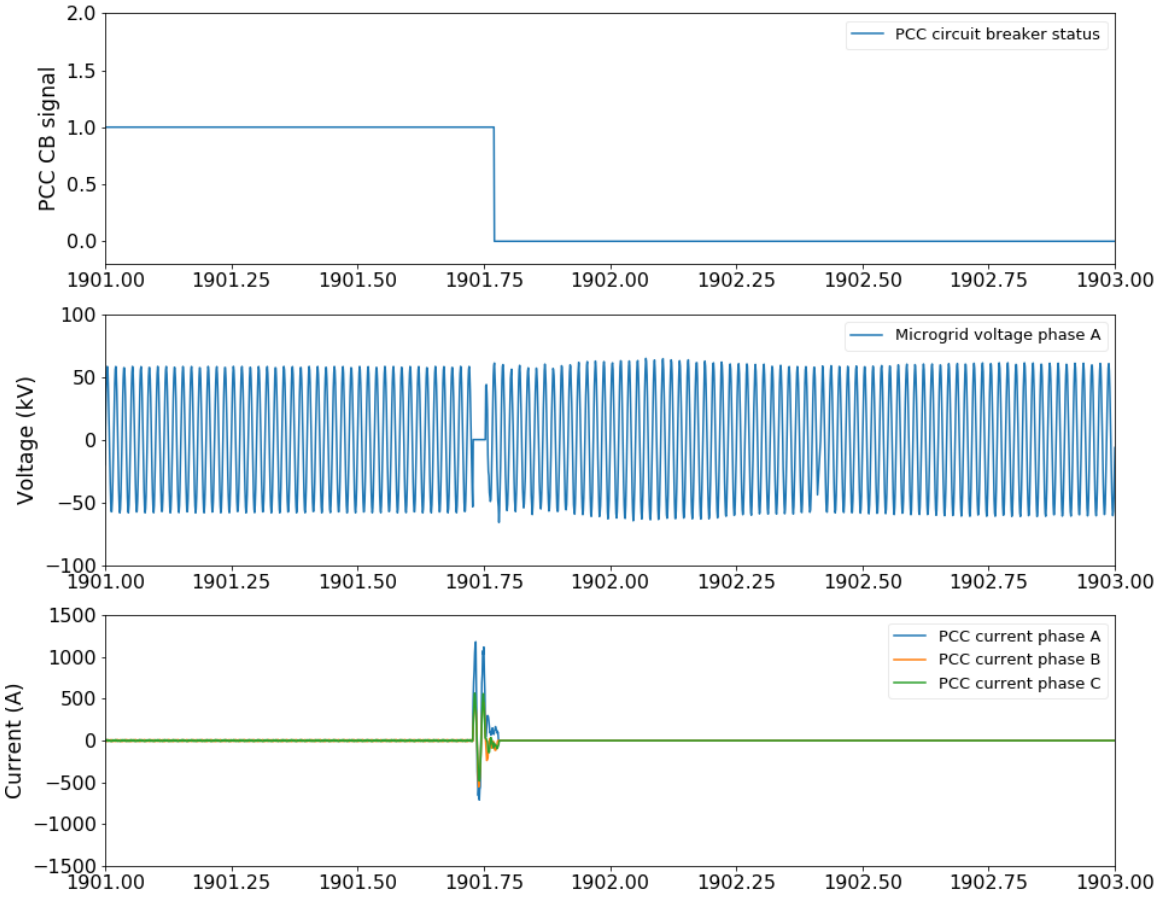

Source: San Diego Gas & Electric Company

Figure A-38: Microgrid Voltage and Frequency at PCC for Test B3.1

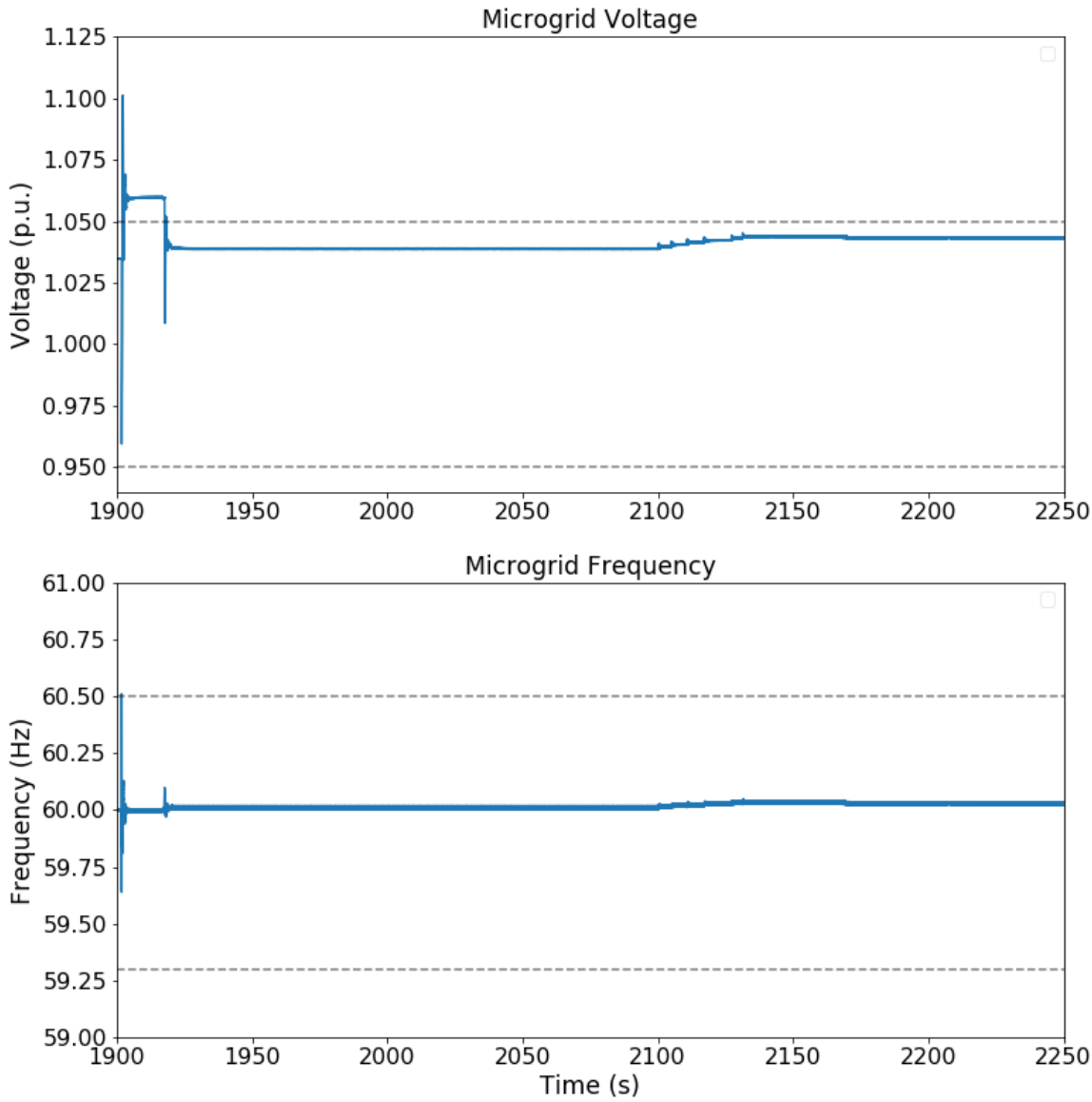

Source: San Diego Gas & Electric Company

Results for Test B3.2: Unplanned Separation Due to an External Fault with Low Load and High Non-dispatchable Generation

The loads and solar insolation were set to the same values as for Test B1.2 when the net load was low and generation from the PV plant was high. Simulation results for Test B3.2 are shown in Figure A-39 and Figure A-40. The top trace shows the disconnect signal issued by PCC protection. The trace second from the top shows the voltage on the microgrid side of the PCC breaker. Once the fault is cleared and the PCC breaker is open, the distributed generators become the voltage and frequency masters and maintain the voltage and frequency. The bottom trace shows the current through the PCC breaker. Similar to Test B3.1, the Wave microgrid

controller did not control any protection devices, and the PCC breaker logic opened the breaker and islanded the microgrid from the utility grid. The microgrid operated in islanded mode for several minutes.

Figure A-39: Unplanned Disconnection Results for Test B3.2

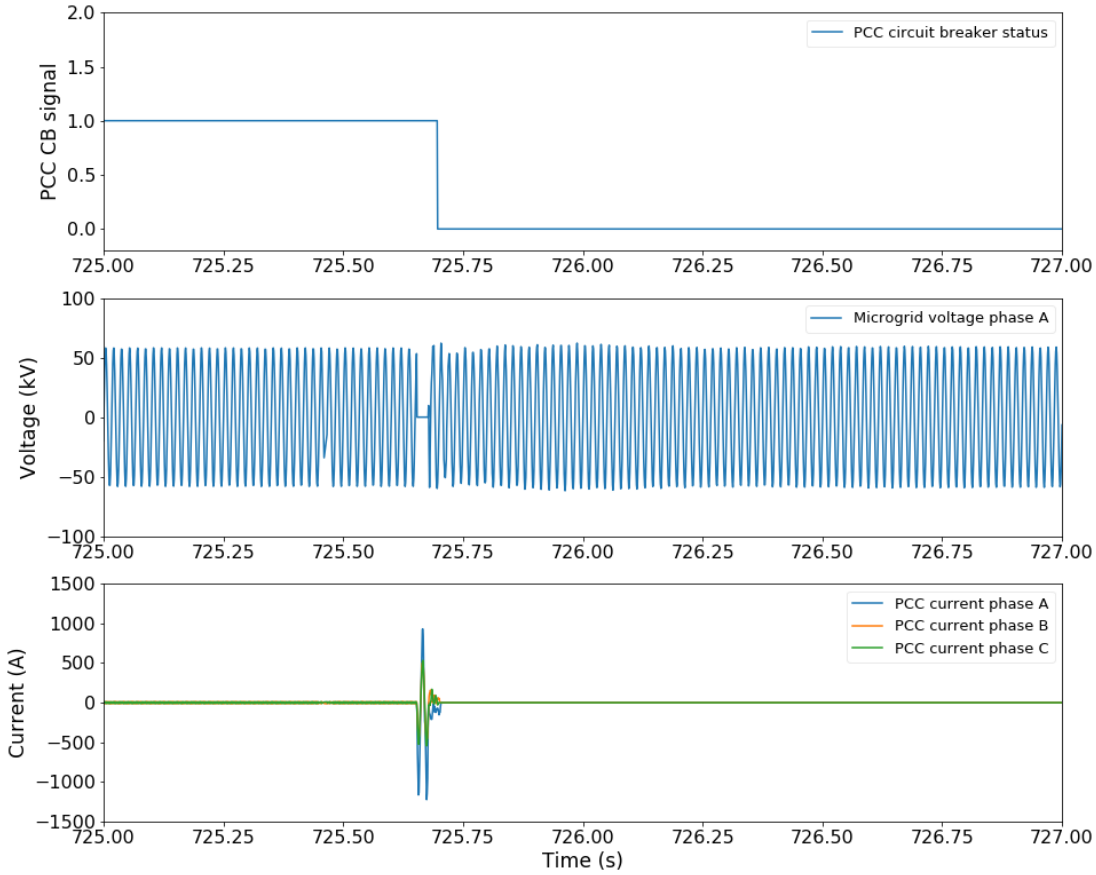

Source: San Diego Gas & Electric Company

Figure A-40: Microgrid Voltage and Frequency at PCC for Test B3.2

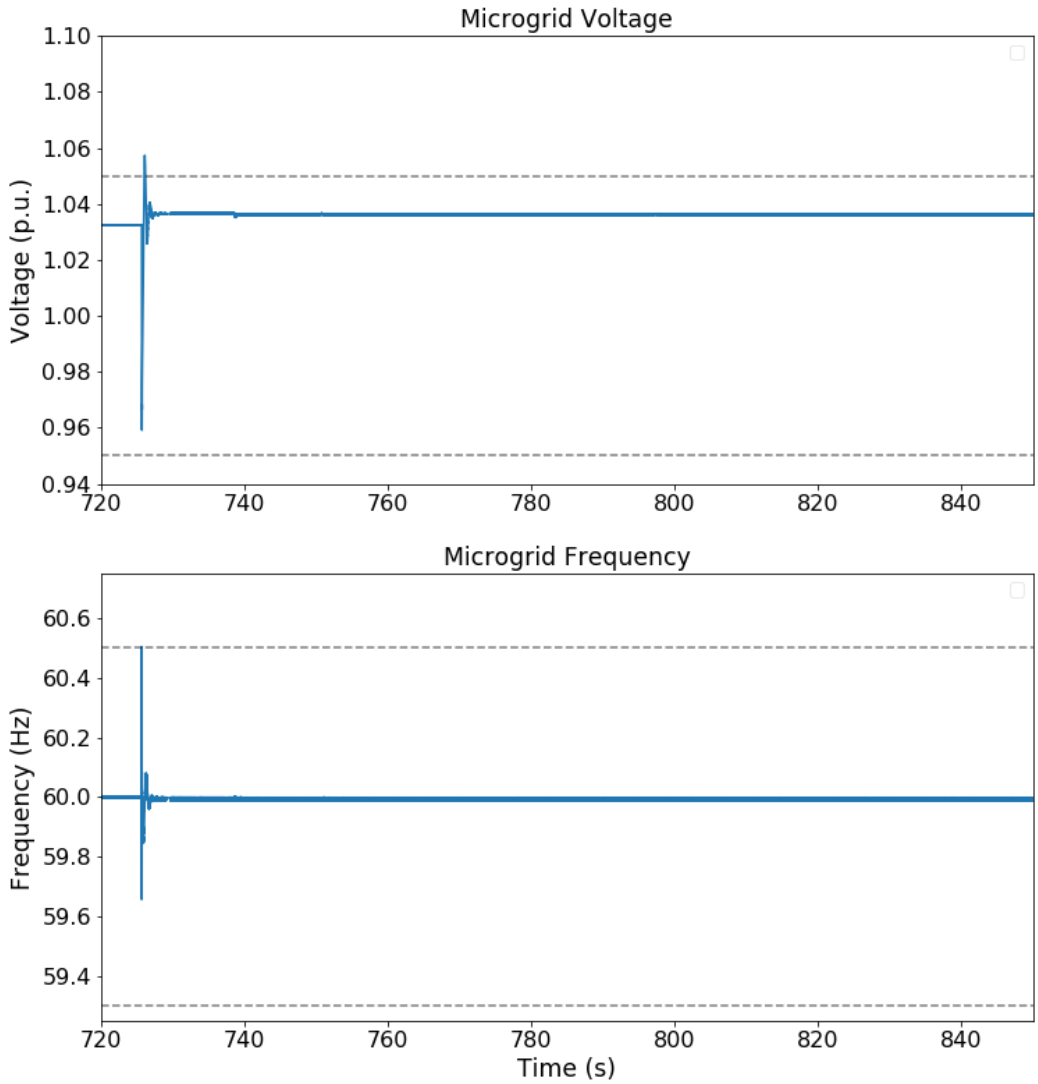

Source: San Diego Gas & Electric Company

Results for Test Case B4: Unplanned Separation Due to the Loss of Utility Power

In this case, the microgrid controller should separate the microgrid from the area utility in response to an unplanned utility outage and the formation of an unintentional island. Due to time constraints, this test case was not simulated.

Scenario C: Operating the Microgrid While Separated from the Utility

The purpose of simulating the scenario of operating the microgrid while separated from the utility was to validate the ability of the Wave control platform to successfully operate the microgrid within normal operating conditions while separated from the external utility (microgrid switch is open). NREL evaluated whether the microgrid voltage amplitude and frequency were maintained within specified ranges under typical load and generation profiles (functional requirement C3). NREL also evaluated whether the controller responded appropriately to internal faults (functional requirement C4), appropriately dispatched generation and controllable loads to meet the dispatch objectives during islanded operation (functional requirement C5) and provided enhanced resilience (functional requirement C6).

Similar to Scenario A, NREL simulated the heavy and light load profiles shown in Figure A-41 and Figure A-42 and NREL set dispatch for survivability. Accelerated (faster than real time) simulations were performed whereby 10 minutes of simulation time equaled 15 seconds of real time. As noted for Scenario A, the Wave code that NREL used was only able to dispatch one SESS, because only one SESS is dispatchable in the field.

The microgrid was set up to run in islanded mode (separated from the area grid) following the procedure for planned islanding described in Test Case B1.

Figure A-41: Load and Solar Insolation Profiles for Heavy Load on July 29, 2014

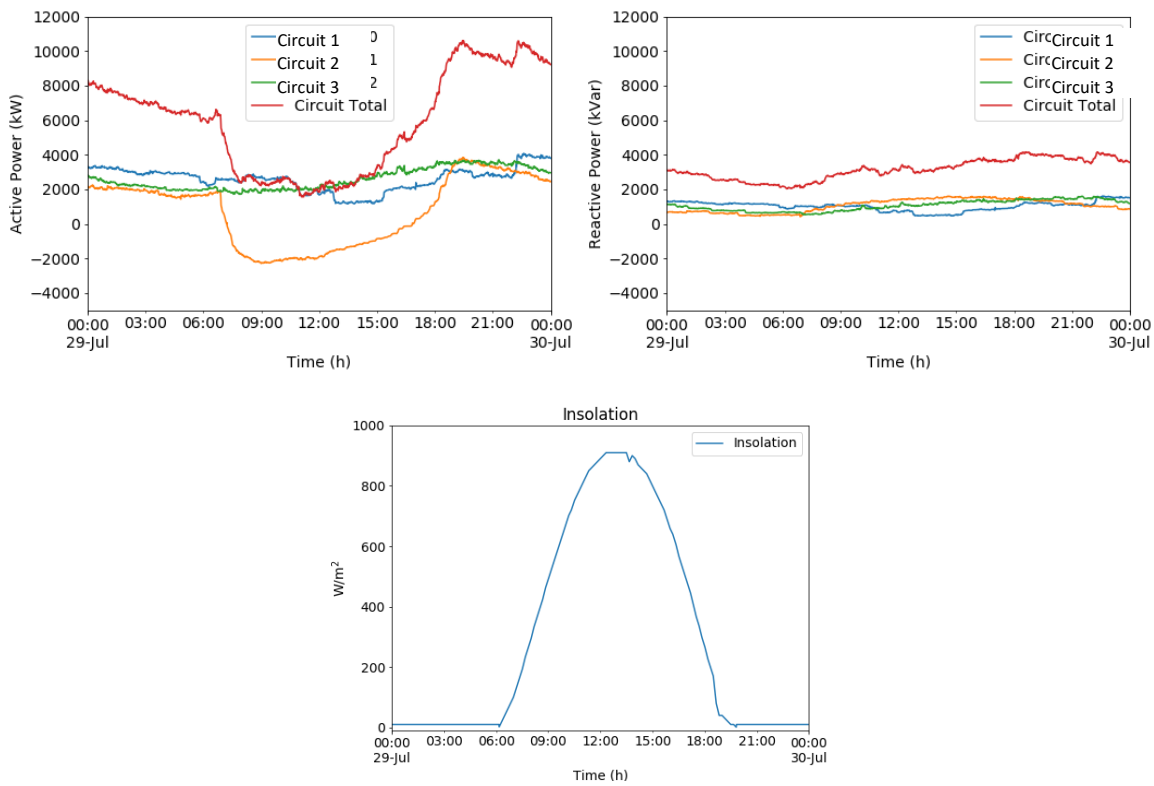

Source: San Diego Gas & Electric Company

Figure A-42: Load and Solar Insolation Profiles for Light Load on January 24, 2014

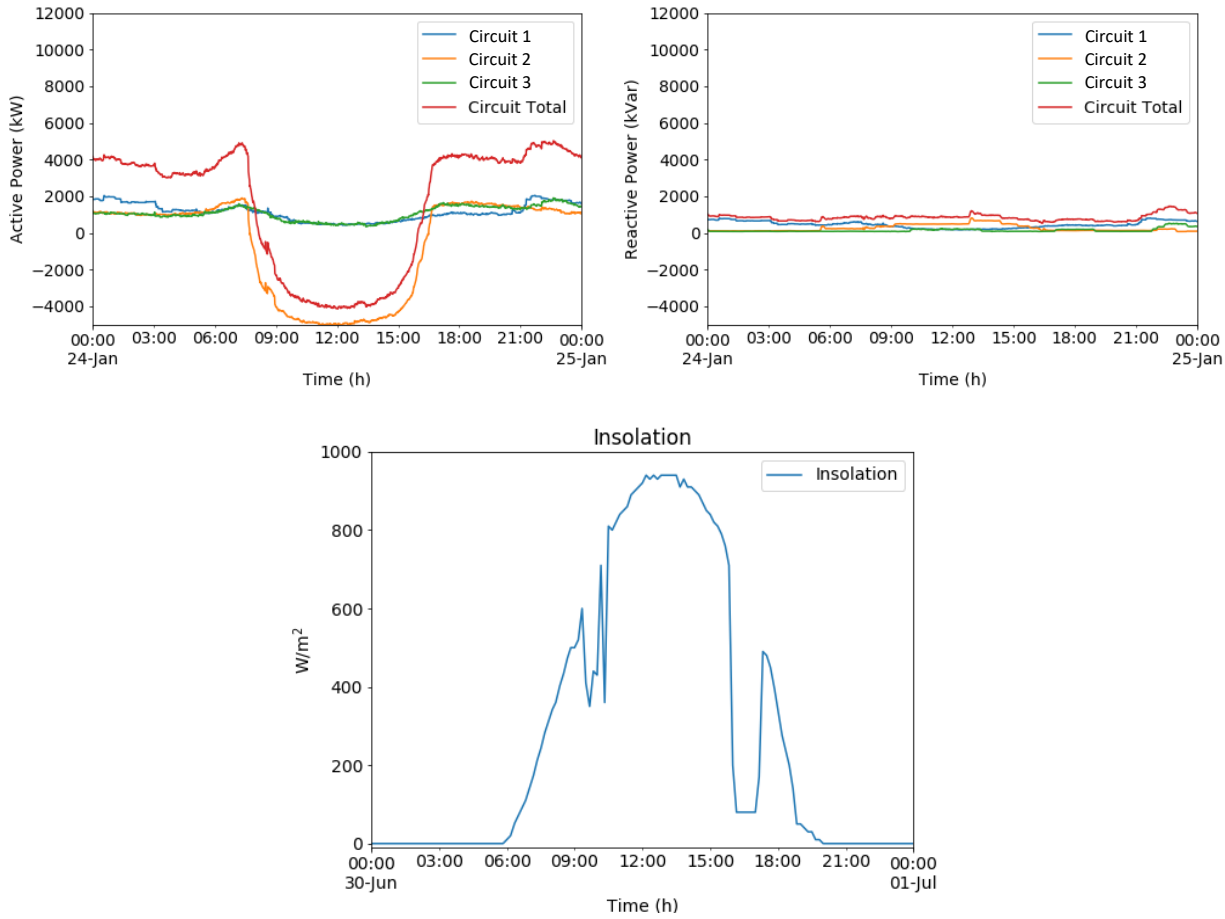

Source: San Diego Gas & Electric Company

Results for Test Case C1: Normal Islanded Operation in Baseline Configuration

For this test case, the microgrid should be configured such that only the distributed generators are available for the Wave to dispatch. Due to time constraints, this test case was not simulated.

Results for Test Case C2: Normal Islanded Operation

In this test case, the microgrid was configured such that all assets were available for dispatch by the Wave. Due to time constraints, only one battery initial state-of-charge condition was simulated and repetition of the lightly loaded tests using the remote ESIF/ITF CHIL/PHIL test setup and simulation of contingency conditions could not be completed.

Results for Test C2.1: Normal Islanded Operation with Heavy Load

For this test, NREL used the insolation profile for the heavy load condition shown in Figure A-41 and the initial battery state of charge was set to 70 percent for the SESS. The results from test A2.1 showed that the microgrid generation assets cannot support islanded operation

during the early morning hours and late night hours when there is no PV generation, and therefore the net active load power was scaled down by a factor of 3.5 from the heavy net load profiles shown in Figure 35 and this resulted in the net load profiles shown in Figure A-43. The net power profiles for each distribution circuit within the microgrid are shown in Figure A-44. A line plot of generation and power references for the PV and battery inverters are shown in Figure A-45. During the night, the distributed generators provide support for the load. During the day, the PV supports most of the load and charges the batteries. The power flow through the PCC circuit breaker is zero because the microgrid is operated in islanded mode.

Figure A-43: Plots of Net Load Power Profiles for Test C2.1

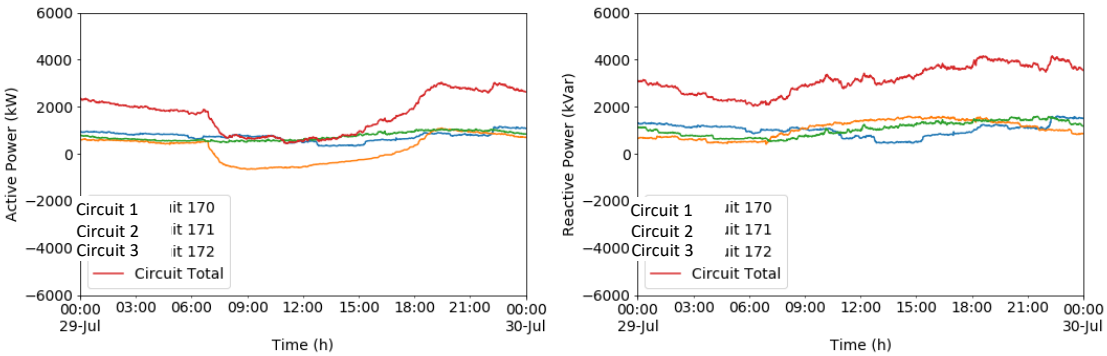

Source: San Diego Gas & Electric Company

Figure A-44: Line Plot of Net Power Flow for each Individual Circuit within the Microgrid for Test C2.1

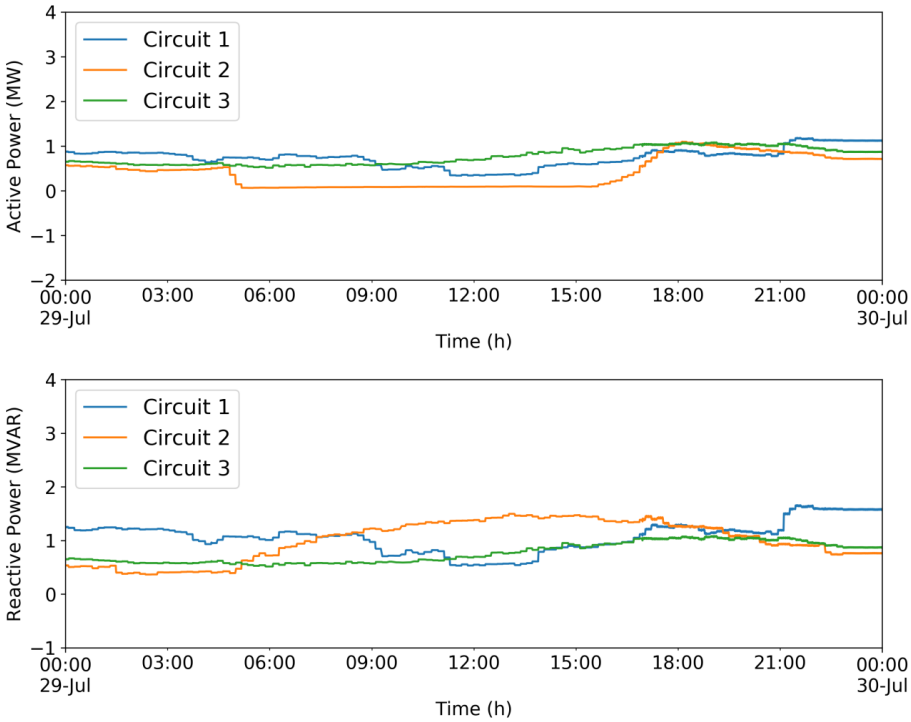

Source: San Diego Gas & Electric Company

Figure A-45: Line plot of generation within the microgrid for Test C2.1

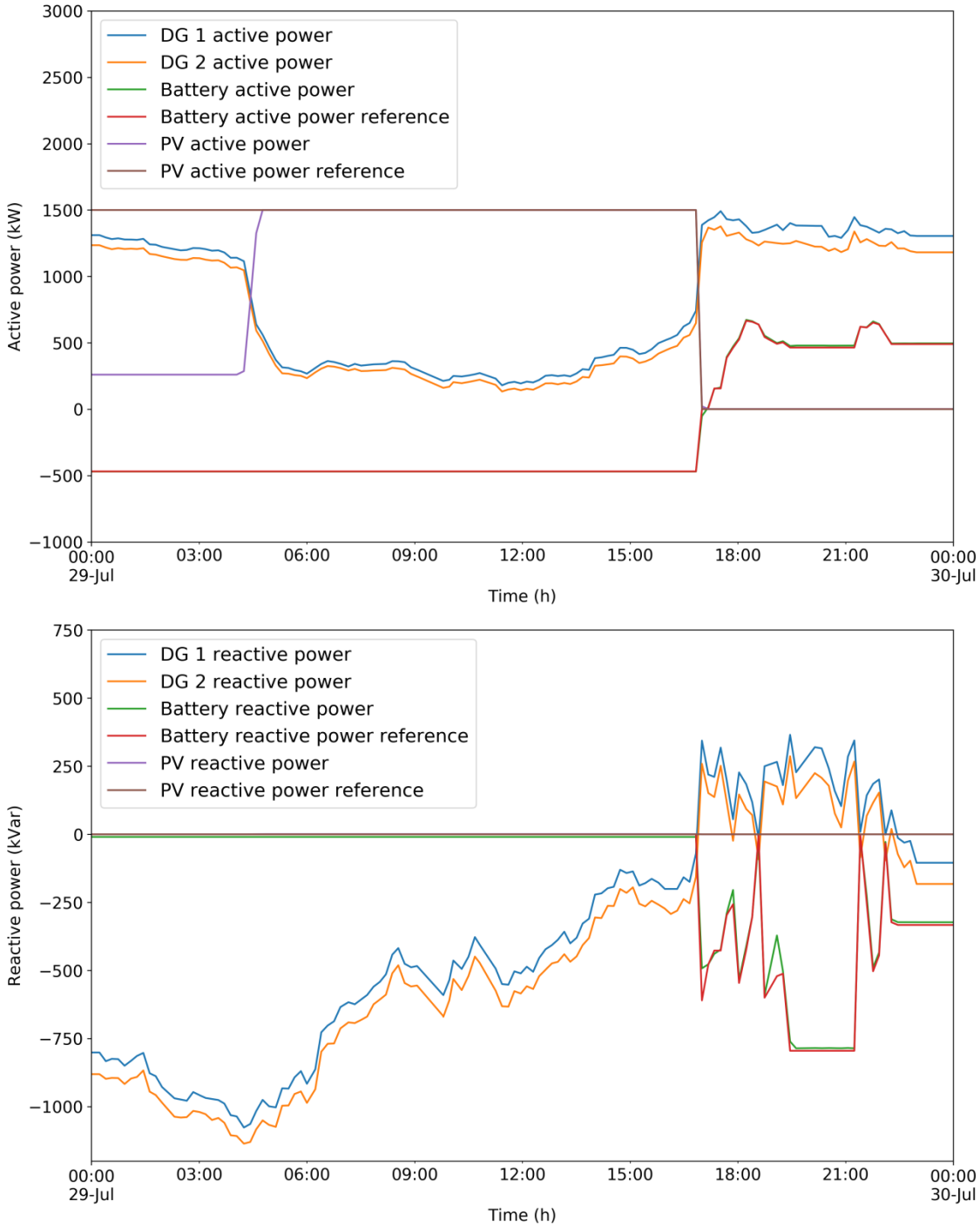

Source: San Diego Gas & Electric Company

The simulated microgrid voltage amplitude and frequency are shown in Figure A-46. Dotted lines show the limits for steady-state operation to provide perspective on the observed deviations. The voltage remains within the steady state limits, but there are significant voltage fluctuations after about 17:00, when the SESS is dispatched to discharge. The voltage fluctuations are due to significant variation in the reactive power reference that Wave issues to the battery, and the genset controllers cannot adjust their reactive power fast enough to mitigate the voltage fluctuations. These results meet the steady-state frequency requirements. However, the Wave microgrid controller does not provide closed-loop control of voltage amplitude and frequency. Instead, it relies on the distributed generators to regulate the voltage and frequency to the set points provided by the Wave microgrid controller. The voltage amplitude and frequency results are therefore a reflection of the distributed generator controllers' capabilities and not of the Wave microgrid controller's capabilities to directly maintain voltage and frequencies within the desired ranges.

Figure A-46: Voltage Amplitude and Frequency Results for Test C2.1

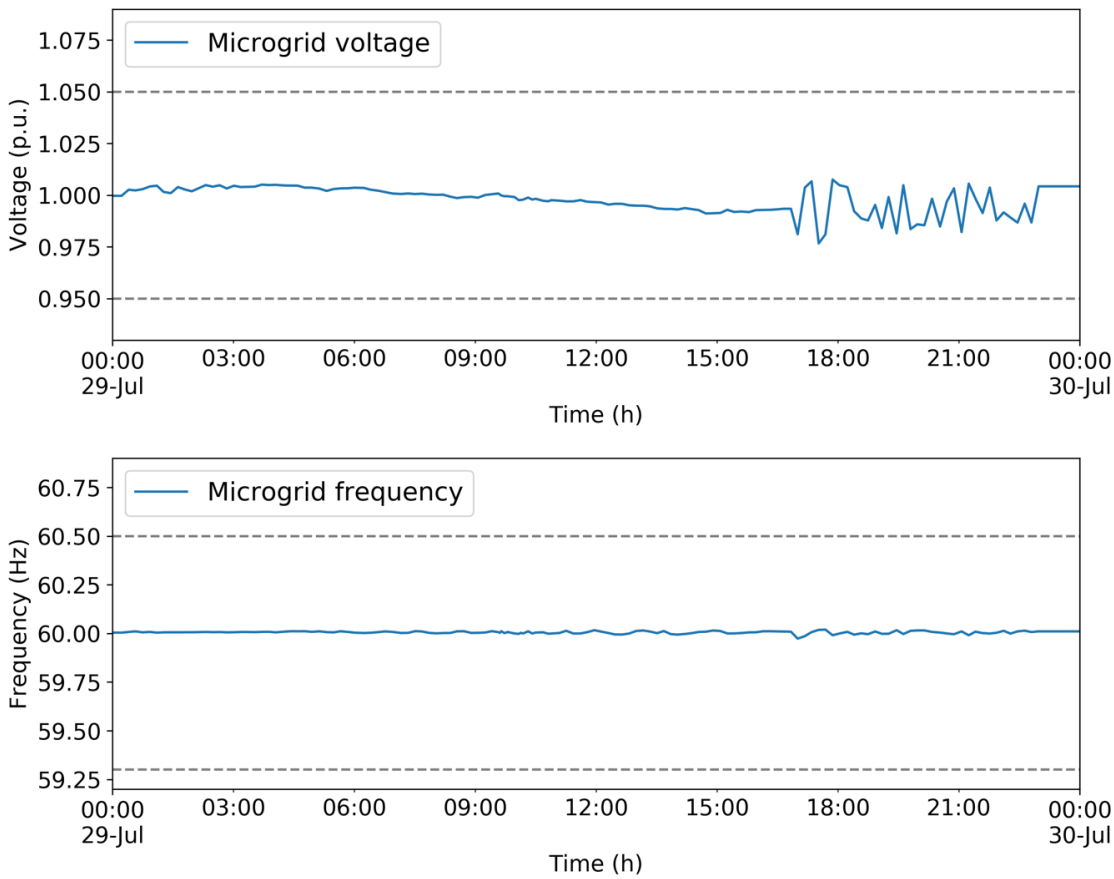

Source: San Diego Gas & Electric Company

NREL calculated metrics related to economic operation, shown in Figure A-47. The survivability metric reflects whether sufficient resources are operating and available to support the microgrid's seamless transition to island mode, so it does not apply here.

Figure A-47: Total and cumulative cost results for Test C2.1

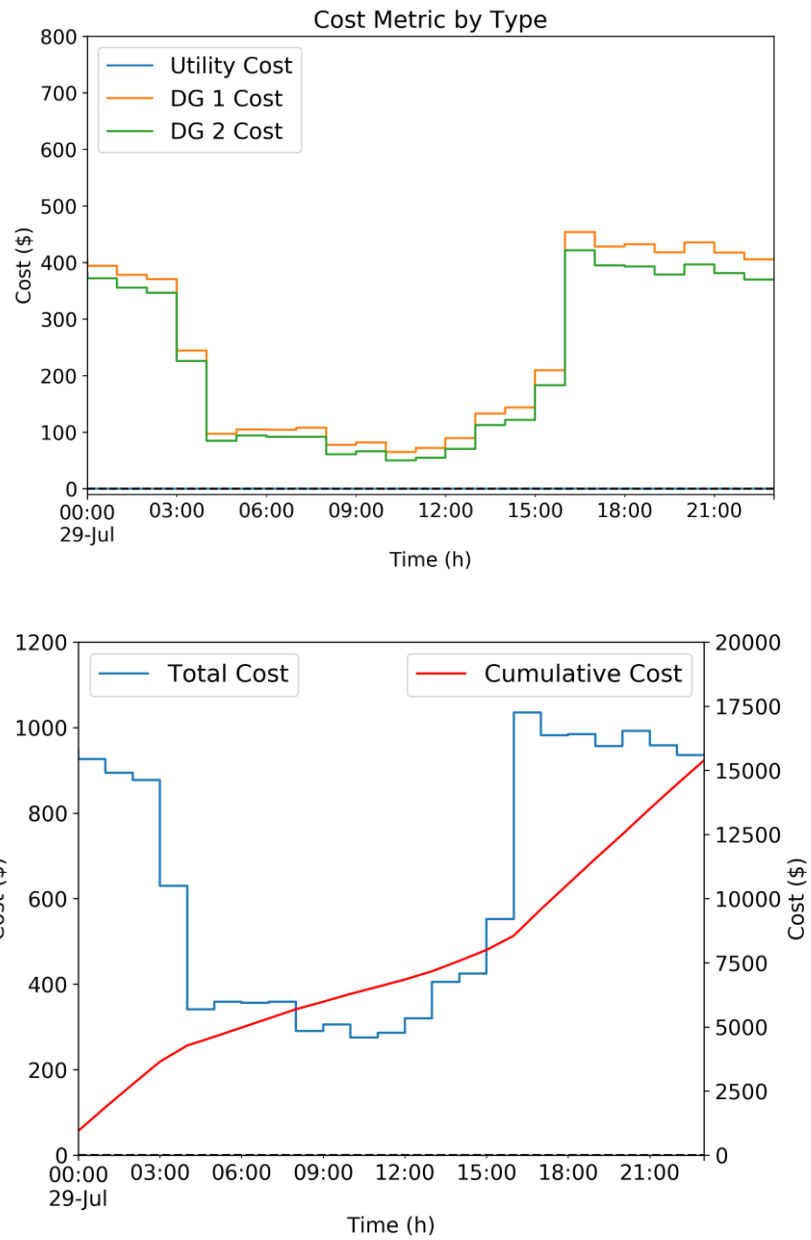

Source: San Diego Gas & Electric Company

Results for Test C2.2: Normal Islanded Operation with Light Load

The net active load power was scaled down by a factor of 1.7 from the light net load profiles shown in Figure A-42 and this resulted in the net load profiles shown in Figure A-48. Insolation profiles are set to be the same as for test C1.2, and the initial battery state of charge is set to 70

percent for the SESS. The net power profiles for each distribution circuit within the microgrid are shown in Figure A-49. A line plot of generation is shown in Figure A-50. The power flow through the PCC circuit breaker is zero because the model is operated in islanded mode. The distributed generators are set to operate in voltage/frequency mode and they are able to supply all the load in the microgrid. The PV is not dispatched because it would not reach the minimum dispatch requirement for the PV inverters. The battery is dispatched to charge late in the day to compensate for capacitor switching that results in a very low power factor for the distributed generators.

Figure A-48: Plots of Net Load Power Profiles for Test C2.2

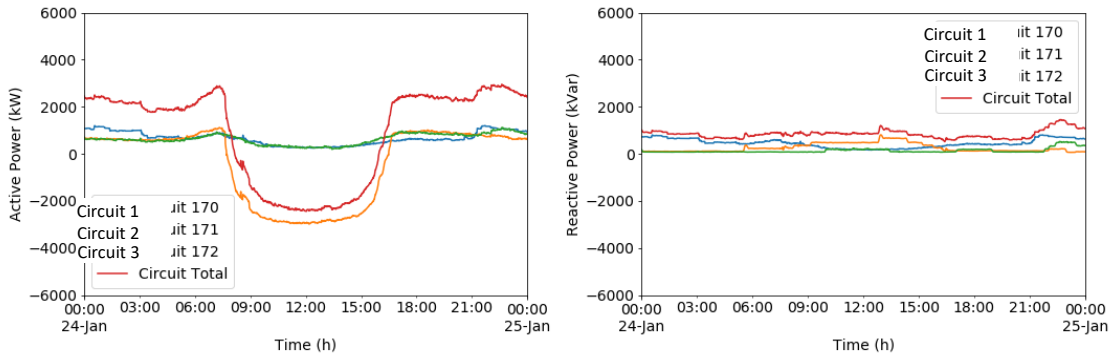

Source: San Diego Gas & Electric Company

Figure A-49: Line Plot of Net Power Flow for each Individual Circuit within the Microgrid for Test C2.2

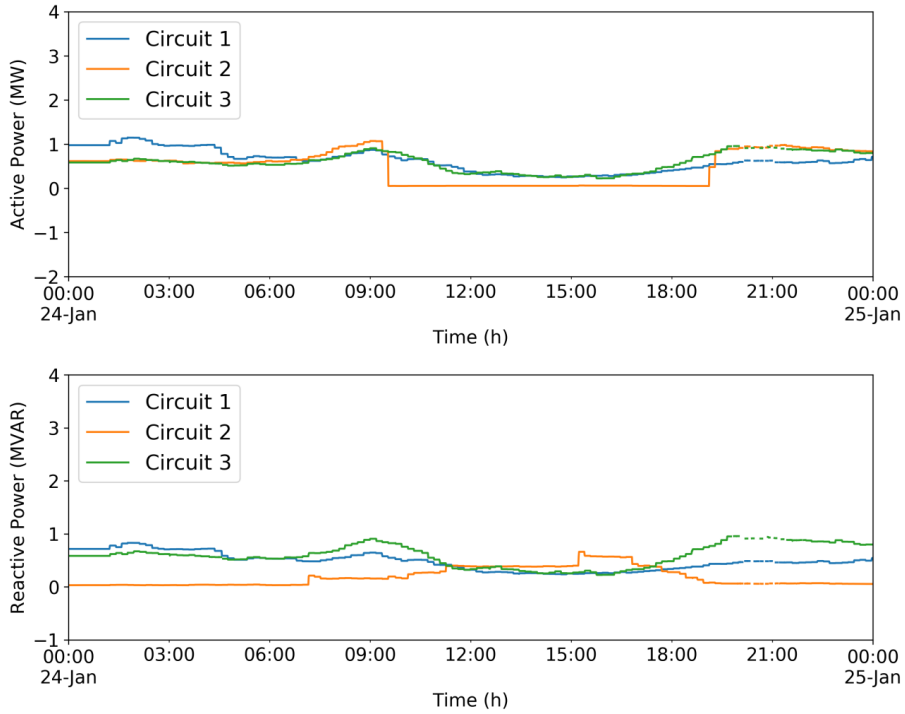

Source: San Diego Gas & Electric Company

Figure A-50: Line Plot of Generation within the Microgrid for Test C2.2

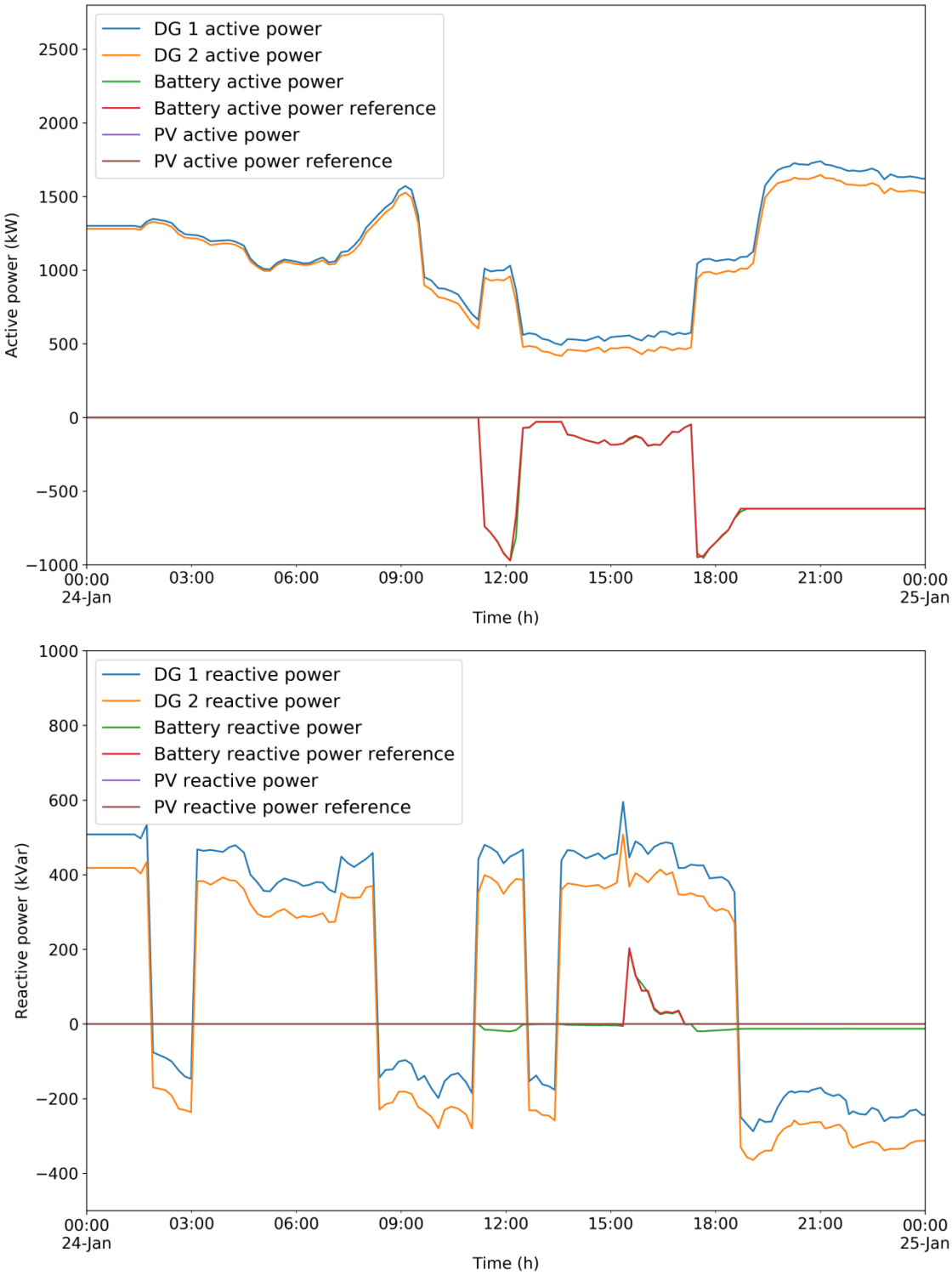

Source: San Diego Gas & Electric Company

The simulated microgrid voltage amplitude and frequency are shown in Figure A-51. Both the voltage and frequency remain within the steady state limits. The step changes in voltage are due to capacitor switching on the distribution circuits. As discussed in Test C2.1, the voltage amplitude and frequency results are not a reflection of the Wave microgrid controller's capabilities to maintain voltage and frequencies.

Figure A-51: Voltage Amplitude and Frequency Results for Test C2.2

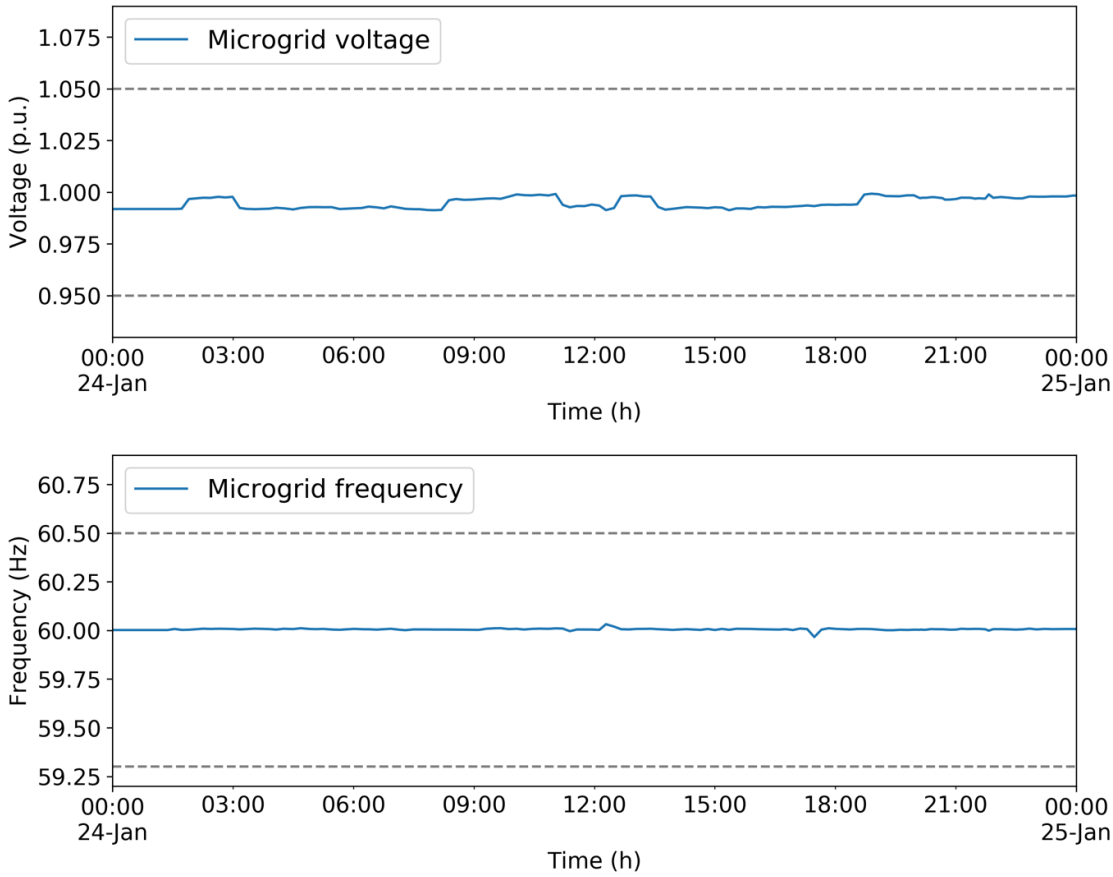

Source: San Diego Gas & Electric Company

The calculated cost metrics are shown in Figure A-52 and Figure A-53.

Figure A-52: Cost by Asset Type Results for Test C2.2

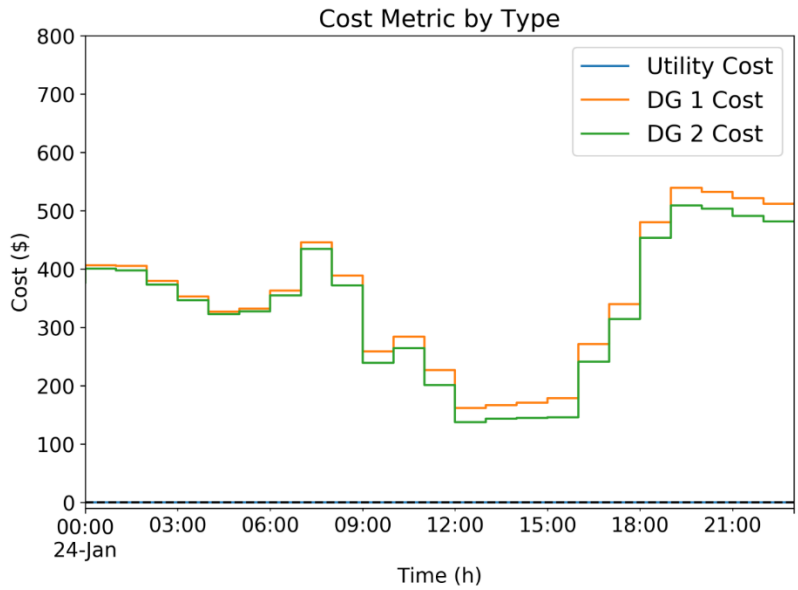

Source: San Diego Gas & Electric Company

Figure A-53: Total and Cumulative Cost Results for Test C2.2

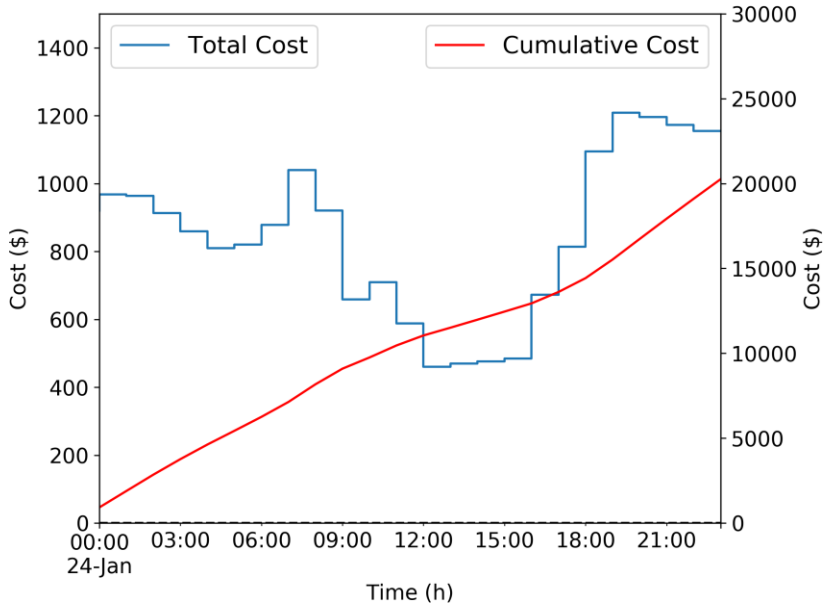

Source: San Diego Gas & Electric Company

Results for Test C2.3.1: Normal Islanded Operation with Light Load and Low Initial State of Charge (remote HIL setup)

For this test, the load and insolation profiles and initial battery state of charge should be set to be the same as for test C2.2, and this test should be run using the remote ESIF/ITF CHIL/PHIL setup. Due to time constraints, this test was not simulated.

Results for Test C2.3.2: Normal Islanded Operation with Light Load and High Initial State of Charge (remote HIL setup)

For this test, the load and insolation profiles and initial battery state-of-charge should be set to be the same as for test C2.2, and this test should be run using the remote ESIF/ITF CHIL/PHIL setup. Due to time constraints, this test was not simulated.

Results for Test C2.4: Normal Islanded Operation with Contingency Conditions

For this test, the load and insolation profiles should be set to a profile with significant loss of PV generation due to cloud cover in the afternoon as shown in Figure A-54. Due to time constraints, this test was not simulated.

Figure A-54: Load and Solar Insolation Profiles for Evaluating Enhanced Resiliency on June 30, 2014

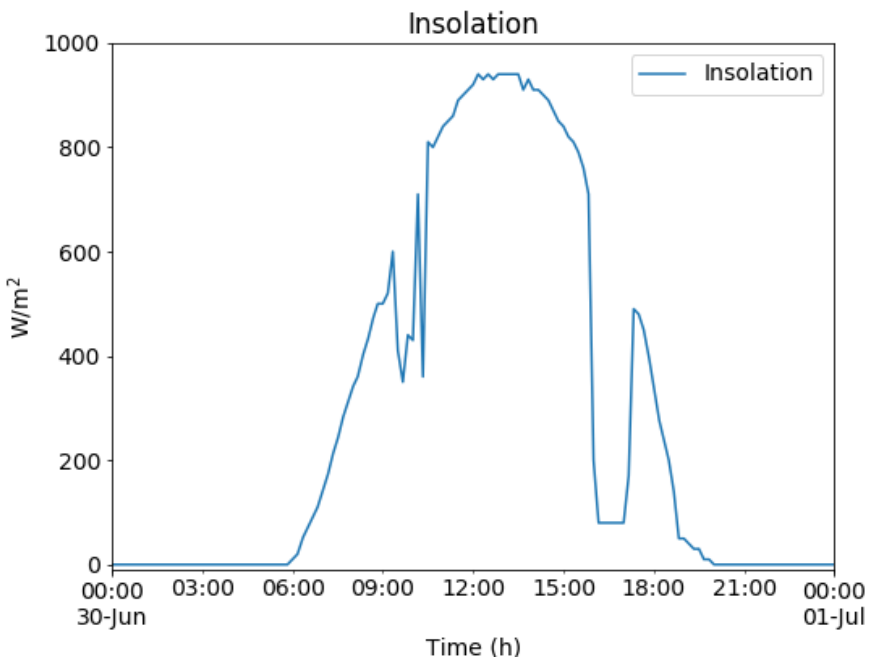

Source: San Diego Gas & Electric Company

Results for Test Case C3: Load Step during Islanded Operation

For this test case, a load step should be simulated during islanded operation. Due to time constraints, this test case was not simulated.

Results for Test Case C4: Internal Short during Islanded Operation

For this test case, an internal single-phase-to-ground fault should be applied. Due to time constraints, this test case was not simulated.

Results for Test Case C5: Black Start

For this test case, a black start of the microgrid should be simulated. Due to time constraints, this test case was not simulated.

Scenario D: Connecting the Microgrid to the Utility

The purpose of simulating the scenario of connecting the microgrid to the utility was to validate the ability of the Wave microgrid controller to reconnect the (islanded) microgrid to the utility following a restoration of utility service. It must resynchronize the microgrid to the external utility, maintain conditions in the range specified during reconnection (functional requirement C2), and restore the microgrid to normal grid-connected operation following reconnection.

The microgrid was set to operate in islanded mode following the procedure described for planned islanding in Test Case B1.

Results for Test Case D1: Reconnection

The Wave microgrid controller does not verify that the electric power system voltage and frequency are within normal ranges before initiating reconnection. This is left to the operator to confirm. Therefore, for our simulation, NREL implemented the synchronization logic in the simulated PCC circuit breaker model so that the Wave's command to start synchronization is sent to the PCC circuit breaker. NREL performed passive resynchronization – that is, the logic waits for the voltage amplitude, frequency, and phase angle differences to come within the specified ranges and then closes the PCC circuit breaker.

NREL requested that the Wave send the synchronize signal. NREL observed whether the system runs for 2 minutes to verify stable operation after resynchronizing back to the grid.

Results for Test D1.1: Reconnection with High Load

The loads and solar insolation were set to the same values as for Test B1.1 when the net load was high. Simulation results for Test D1.1 are shown in Figure A-55 for a few cycles before and after reconnection. The microgrid controller's resynchronization signal appears to be zero a few cycles before the resynchronization event. This is because the resynchronization signal is typically a pulse. The pulse can be observed in Figure A-56, which shows the simulation results for a longer period of 20 seconds. In Figure A-55, the trace at the top shows the microgrid controller disconnect signal and the PCC circuit breaker status. The microgrid controller disconnect signal is zero, indicating that the Wave microgrid controller had previously issued a signal to reconnect. The second trace shows both the area grid and microgrid voltages for Phase A, and the third trace shows the current through the PCC circuit breaker. The fourth and fifth

traces show the measured output current of the hardware battery storage inverter and PV inverter. The microgrid was successfully reconnected to the area grid.

Figure A-55: Simulation Results for Test Case D1.1 (reconnection) during a Few Cycles

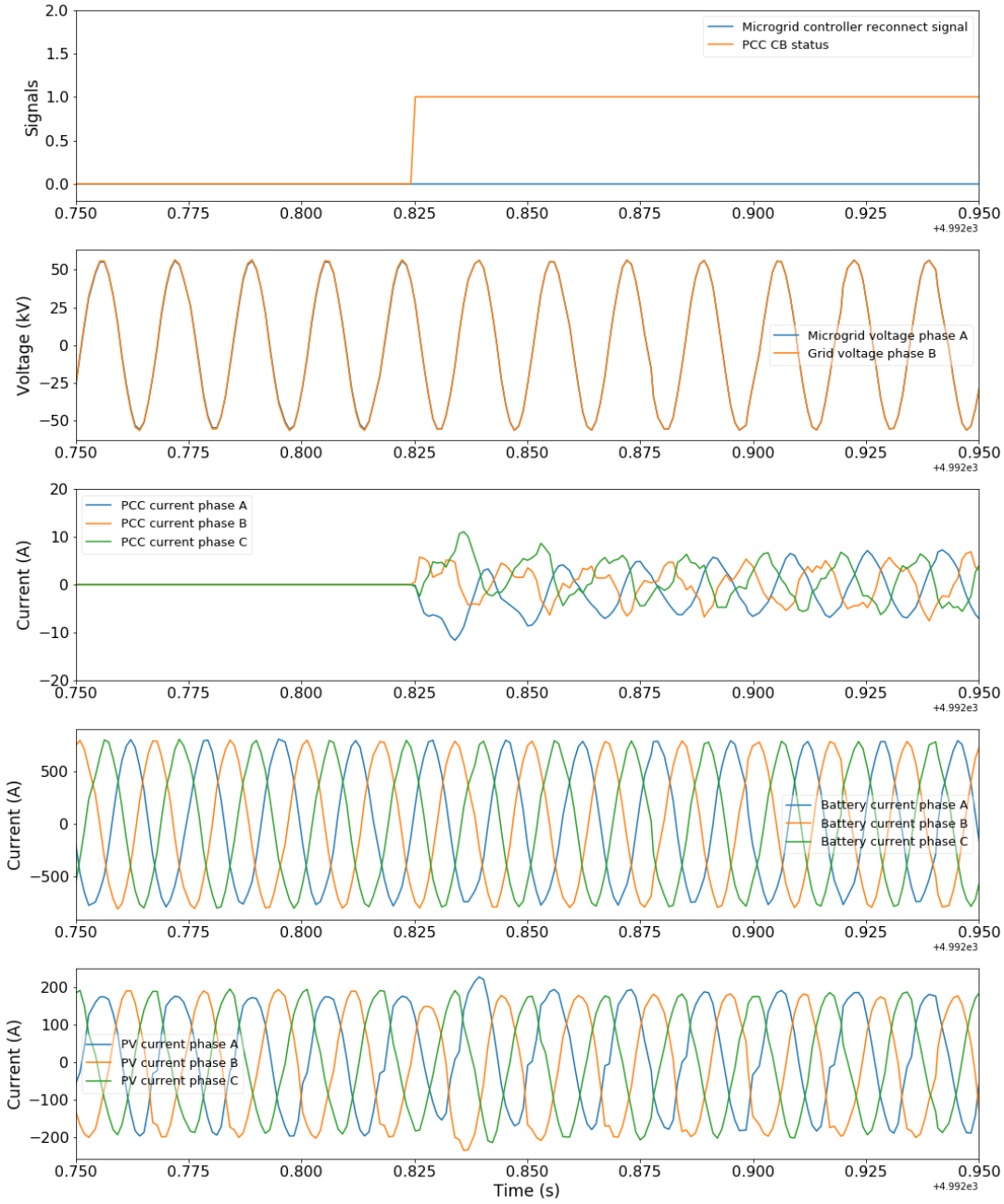

Source: San Diego Gas & Electric Company

Figure A-56: Simulation Results for Test D1.1 (reconnection) during a Longer Time Period

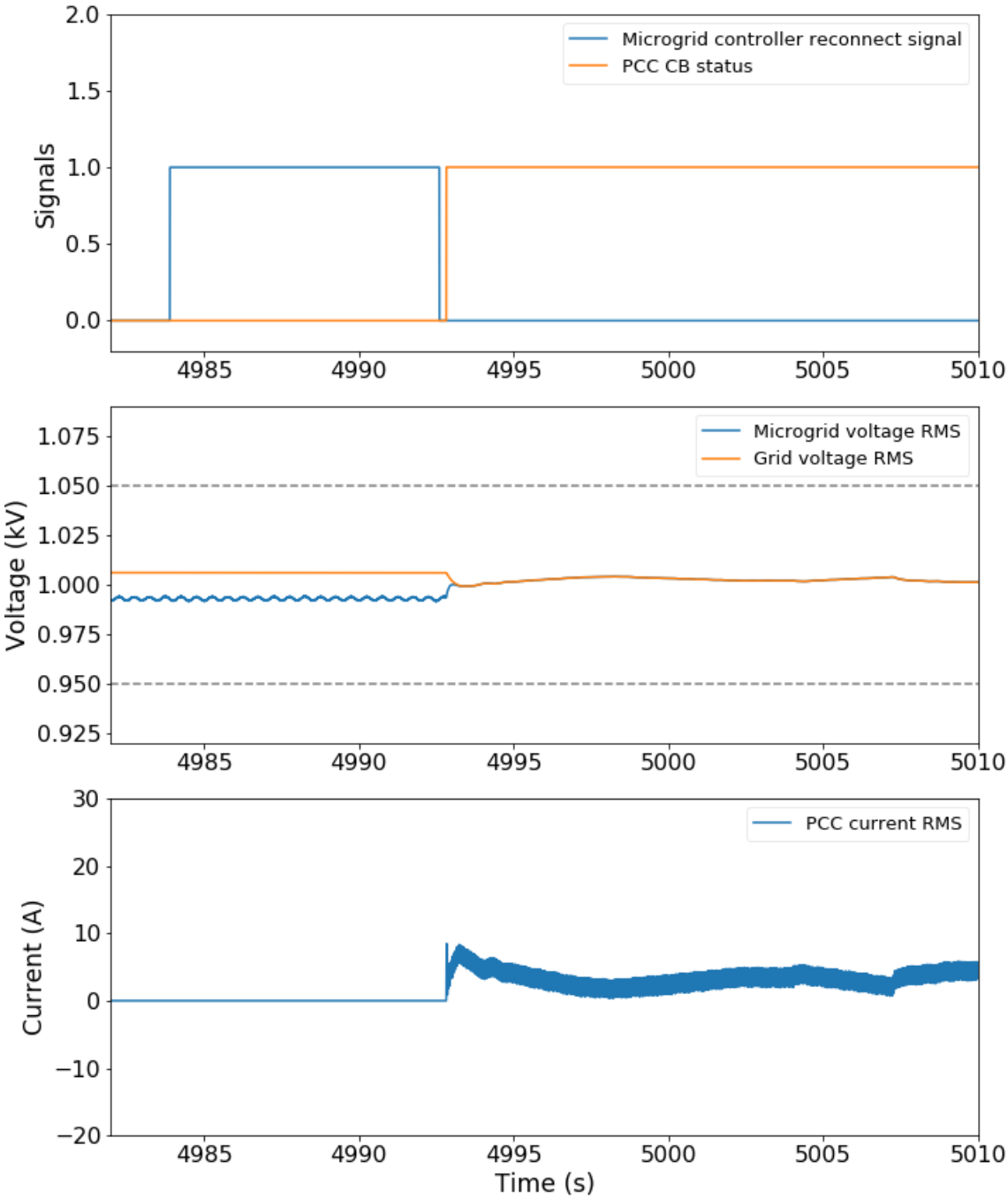

Source: San Diego Gas & Electric Company

The voltage amplitude, phase angle, and frequency difference are shown in Figure A-57. These results show that the logic implemented in the simulated PCC circuit breaker meets the requirements for reconnection. The phase angle difference shown in Figure A-57 matches the voltage waveforms in Figure A-55.

Figure A-57: Voltage Phase Angle, RMS, and Frequency Difference between Grid and Microgrid Side

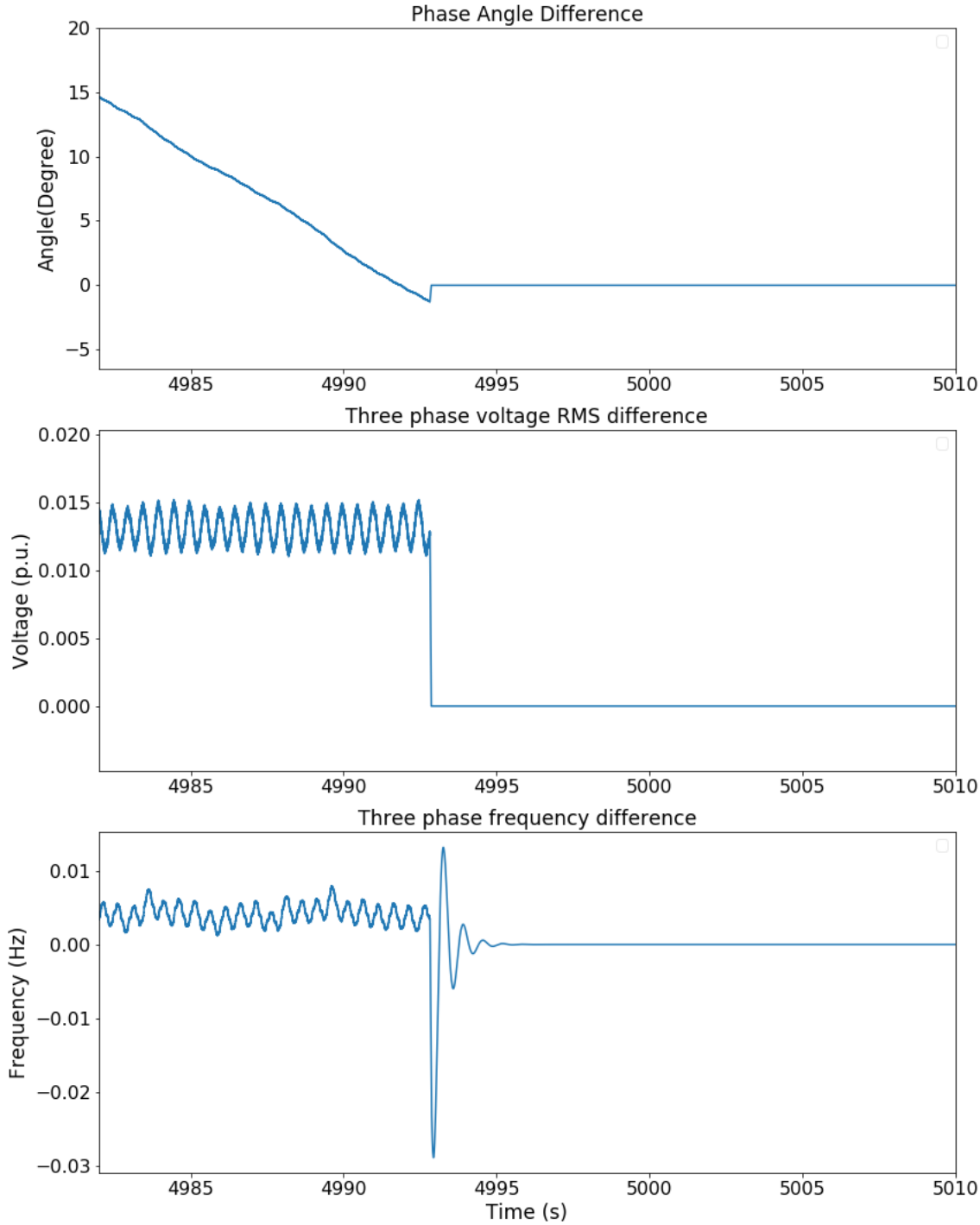

Source: San Diego Gas & Electric Company

Results for Test D1.2: Reconnection with Low Load

The loads and solar insolation were set to the same values as for Test B1.2 when the net load was low. Simulation results for Test D1.2 are shown in Figure A-58 for a few cycles before and after reconnection.

Figure A-58: Simulation Results for Test D1.2 (reconnection) during a Few Cycles

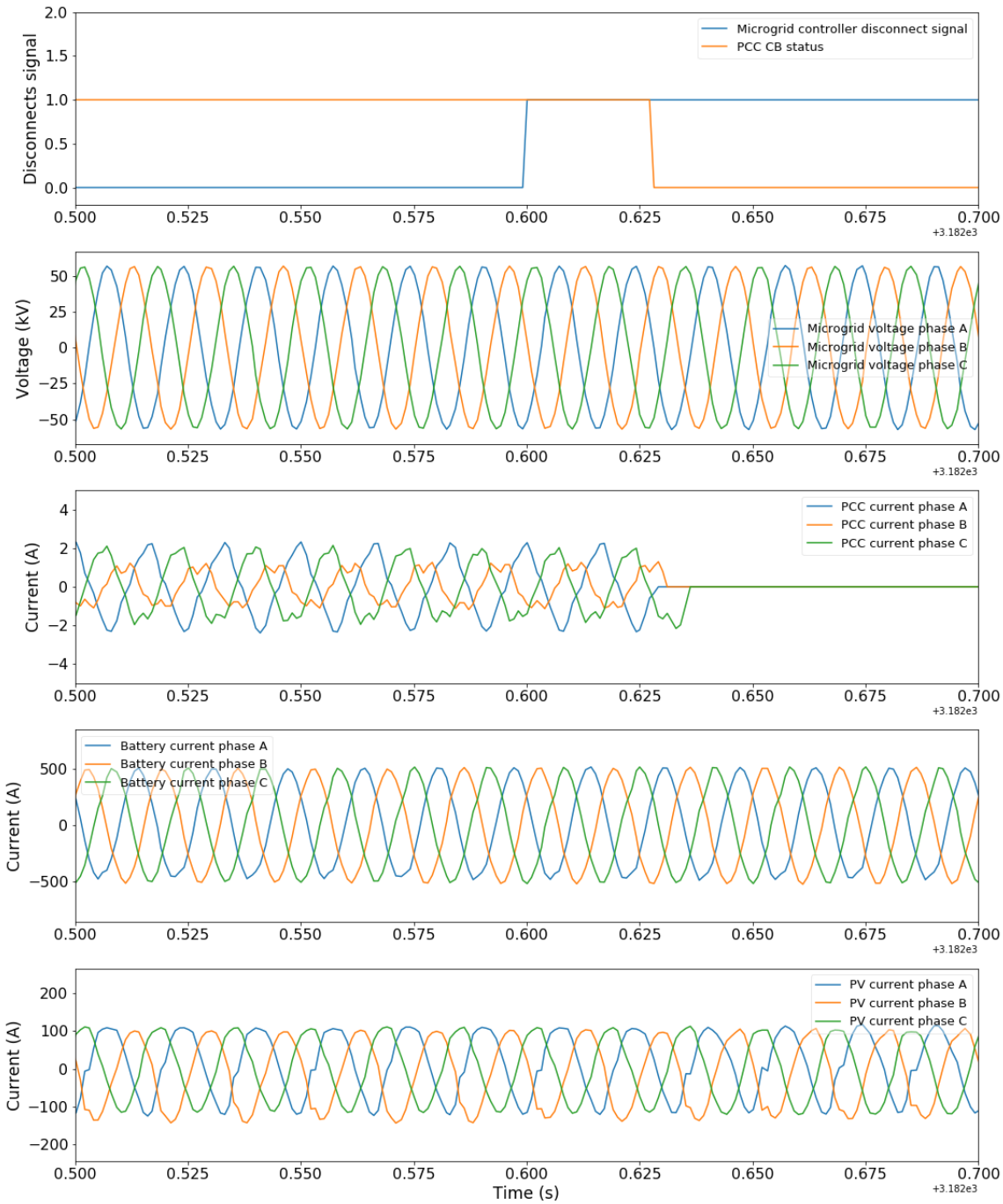

Source: San Diego Gas & Electric Company

Similar to test case D1.1, the microgrid controller sends a pulse signal. Once this pulse is received, the PCC circuit breaker logic waits for 180 seconds for the voltage phase angle, magnitude, and frequency to fall within the limits. In Figure A-58, the trace at the top shows the microgrid controller disconnect signal and the PCC circuit breaker status. The microgrid controller disconnect signal is zero, indicating that the Wave microgrid controller had previously issued a signal to reconnect. The second trace shows both the area grid and microgrid voltages for Phase A, and the third trace shows the current through the PCC circuit breaker. The fourth and fifth traces show the measured output current of the hardware battery storage inverter and PV inverter. Figure A-59 and Figure A-60 show the simulation results for a longer period of 20 seconds. The microgrid was successfully reconnected to the area grid in this test case.

Figure A-59: Simulation Results for Test D1.2 (reconnection) during a Longer Period

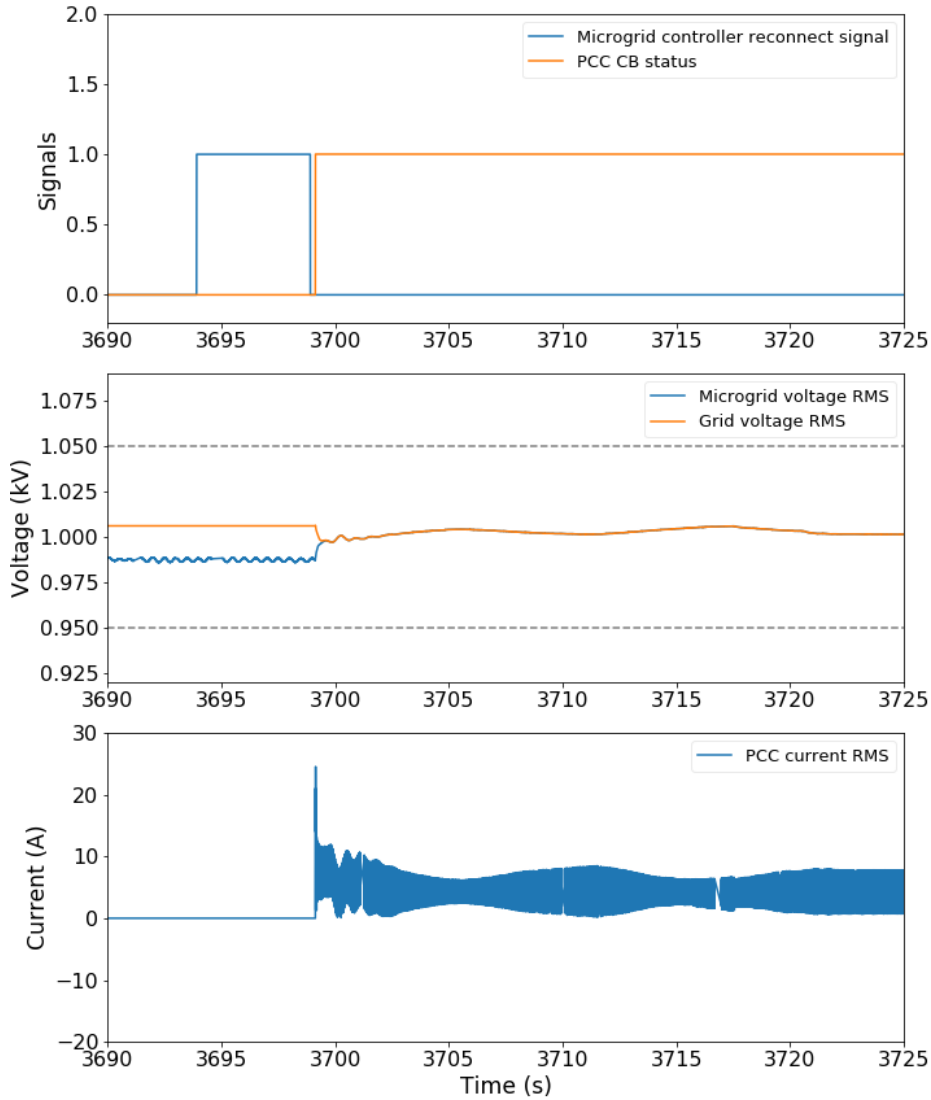

Source: San Diego Gas & Electric Company

Figure A-60: Voltage Phase Angle, RMS, and Frequency Difference between Grid and Microgrid Voltage

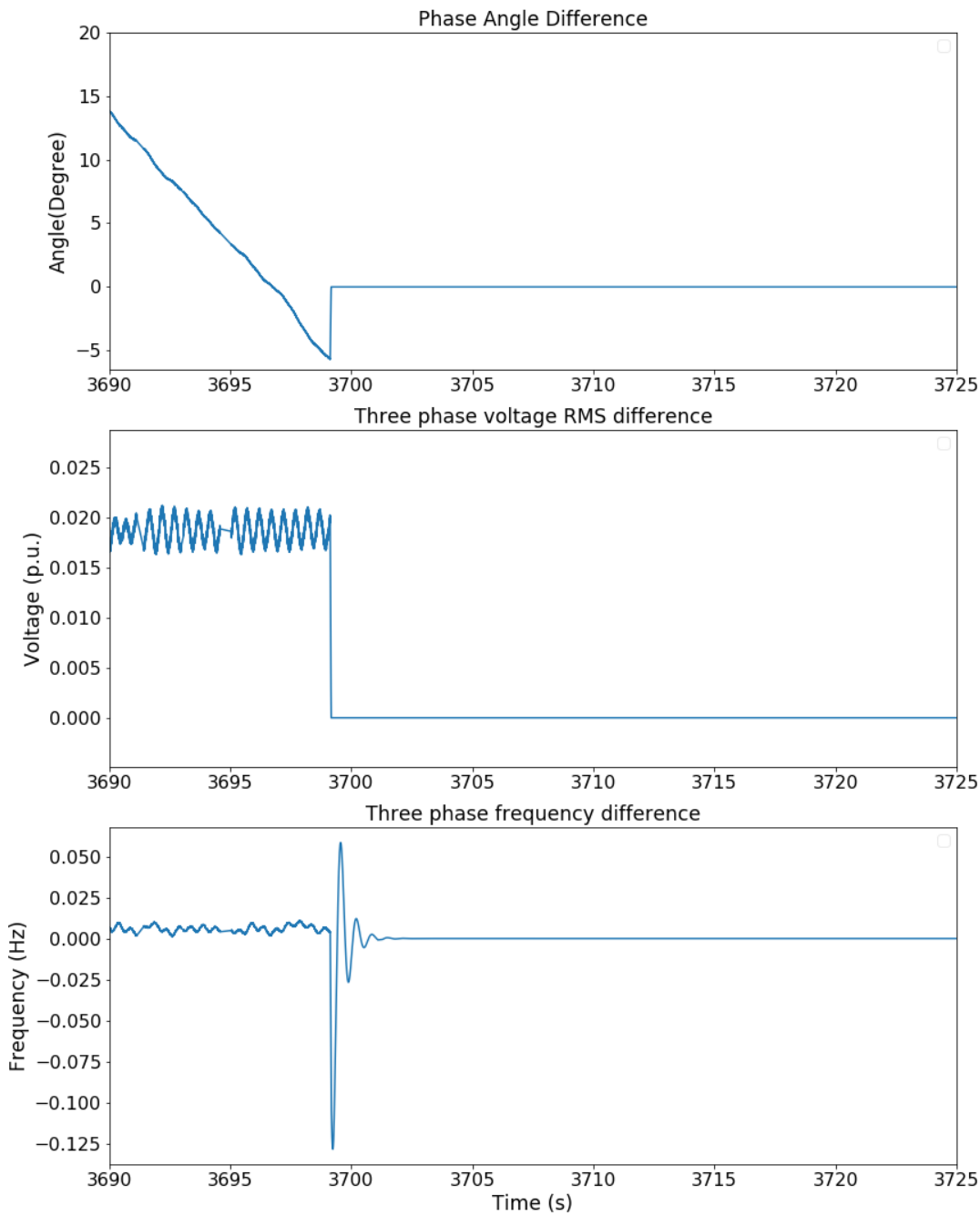

Source: San Diego Gas & Electric Company

APPENDIX B:
Metrics for Microgrid Controller Evaluation

The metrics by which dispatch and resiliency were evaluated are described in the following sections.

Survivability of Critical Loads

The survivability metric will reflect whether sufficient resources (for example, generation and/or energy storage) are operating and available to support the microgrid's seamless transition to island mode, and it will be calculated as follows:

$$S_n = \frac{P_{loads,crit,n}}{P_{avail,n}}$$

where $P_{loads,crit,n}$ is the total active power of all loads that are identified as critical by the community and San Diego Gas & Electric during time step n, and $P_{avail,n}$ is the total power available from all dispatchable generation[5] during time step n. For energy storage systems, the calculation of $P_{avail,n}$ will consider the available state-of-charge of the batteries. The survivability metric should be less than 1 at all time steps.

Economic Operation

The cost of operating the microgrid for the duration of the scenario simulated, C, will be calculated as follows:

$$C = \sum_N P_{grid,n} \cdot \tau \cdot c_{grid,n} + \sum_k \left\{ \sum_N P_{DER,k,n} \cdot \tau \cdot c_{DER,k,n} \right\} + c_D \cdot \max\left(P_{grid,n} \cdot \tau\right)$$

where P_{grid} is the power supplied by the grid, c_{grid} is the cost of grid power, $P_{DER,k}$ is the power supplied by the kth DER resource within the microgrid, $c_{DER,k}$ is the cost of supplying power from the kth DER resource within the microgrid, c_D is the demand charge associated with grid power and τ is time step. The cost to operate the DER, $c_{DER,k}$ was assumed to be zero for PV and battery energy storage systems; and it was calculated based on representative efficiency data and diesel fuel costs for the diesel generators.

Environmental Performance

The estimated carbon dioxide (CO_2) emissions associated with operating the microgrid for the duration of the scenario simulated, ϑ, will be calculated as follows:

[5] For accelerated tests, only steady-state values that are achieved after assets have been dispatched for each time step are used.

$$\vartheta = \sum_{N} P_{grid,n} \cdot \tau \cdot \xi_e + \sum_{k} \left\{ \sum_{N} P_{DER,k,n} \cdot \tau \cdot \xi_g \right\}$$

where ξ_e is the electricity emissions factor for the grid, and ξ_g is the diesel emissions factor. Note that ξ_g is zero for photovoltaic (PV) systems and battery energy storage systems (BESSs). The electricity and gas emissions factors provided in Attachment 12 of PON-14-301 (CEC 2014) shown here in Table B-1, will be used for the grid.

Table B-1: Emission Factors in Carbon Dioxide Equivalent (CEC 2014)

	Emissions Factor (CO_2e[a])	**Emissions Factor (CO_2e[a])**
Electricity	0.588 lbs/kWh saved	0.000283 metric tons/kWh
Gas	11.7 lbs/therm saved	0.0053 metric tons/therm

[a] Carbon dioxide equivalent

APPENDIX C: Results of Advanced Research and Development Control Functions Evaluation

This phase of testing evaluated the performance of the OSISoft/UCSD implementation of the advanced R&D microgrid control functions called ACT. The test setup shown in Figure C-1 was used, and the RTDS ran the reduced-order model in real time for Borrego Springs. The microgrid was operating while connected to the utility.

Figure C-1: Borrego Springs Test Setup for Evaluation of Advanced R&D Control Functions

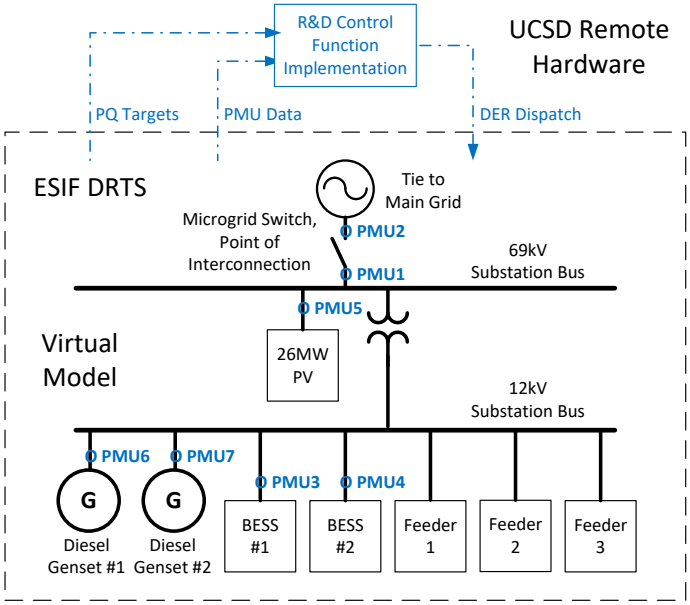

Source: San Diego Gas & Electric Company

For all the test cases shown here, the National Renewable Energy Laboratory (NREL) used 300 steps of changes that were updated approximately every 2 to 3 seconds. These changes are load steps, PCC reference set points, and solar irradiation profiles.

Results from Test Case ACT1: Real and Reactive Power Tracking

The purpose of this test case was to demonstrate the ability of the ACT functions to ensure that the real and reactive power flow (P,Q) across the PCC can track (follow) P,Q reference signals (P_R,Q_R) under steady-state conditions. For these test cases, the loads and solar irradiance are constant, and the reference signals are changing.

Results for Test ACT1.1: Real and Reactive Power Tracking with High Load and High PV Generation

The load profiles and target power flows across the PCC are shown in Figure C-2. A constant solar irradiance of 900 W/m^2 was used. The results shown in Figure C-3 show the set points and the actual values of the simulated power flow across the PCC (P, Q) and the error between the P_R,Q_R and the P, Q. It also shows the set points and simulated power of the two distributed generators, the battery and the PV. The ACT was able to meet the real power set points throughout the experiment. The reactive power set point from 270 to 370 seconds was not met. It can be observed that the ACT was dispatching all the assets to its max. However, the distributed generators were not able to provide any reactive power support because they were not dispatched to provide any real power. But once the set point was changed, the DERs were able to provide enough reactive power support to meet the set point. The instantaneous errors were up to 11 MW and 2 MVAR respectively and the root mean square errors (RMSEs) over the duration of the experiment were 1.583 MW and 0.484 MVAR respectively.

Figure C-2: Load and Target Power Flow across the PCC for Test ACT 1.1

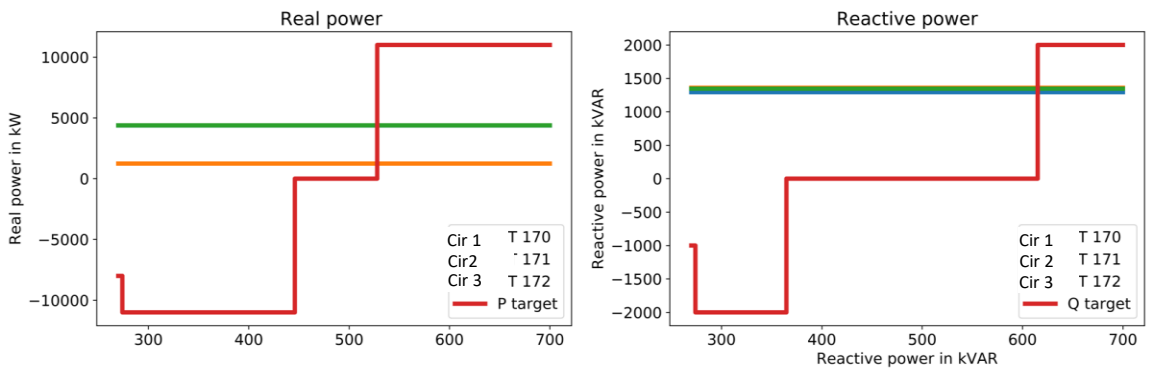

Source: San Diego Gas & Electric Company

Figure C-3: Power flow Across the PCC for Test ACT 1.1

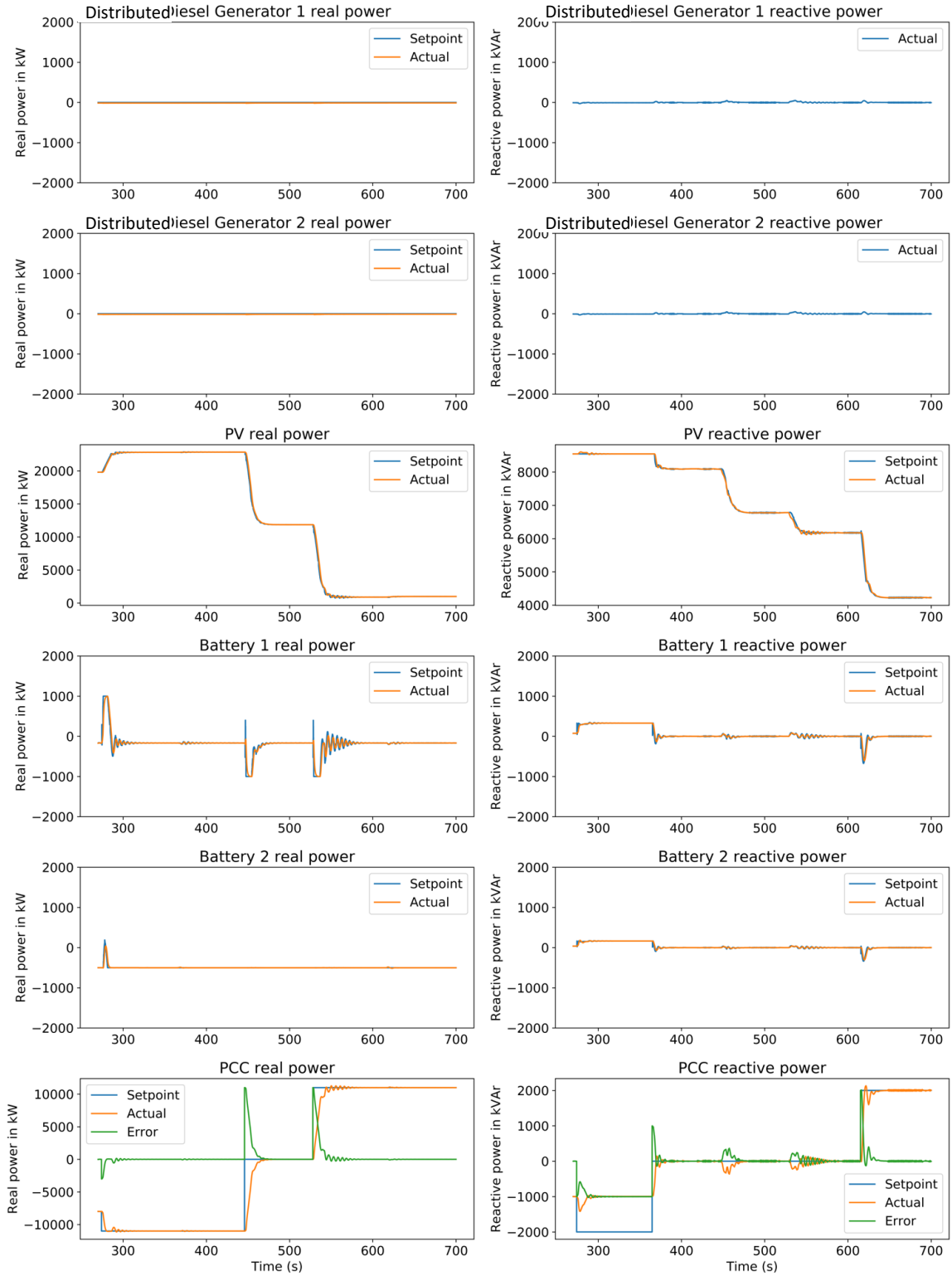

Source: San Diego Gas & Electric Company

Results for Test ACT1.2: Real and Reactive Power Tracking with High Load and Low PV Generation

The load profiles and target power flows across the PCC are shown in Figure C-4. A constant solar irradiance of 100 W/m^2 was used. The ACT is able to track the reference signal, as shown in Figure C-5, with peak instantaneous errors of 5 MW and 2 MVAR respectively and RMSEs of 0.697 MW and 0.255 MVAR respectively. The ramp rate of the distributed generators, which is accounted for in the ACT, was a significant contributor to the active power error.

Figure C-4: Load and Target Power Flow across PCC for Test ACT 1.2

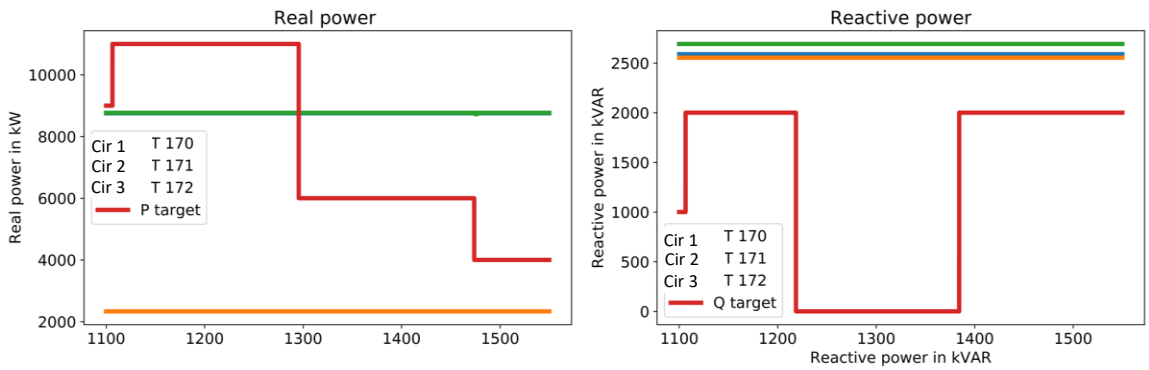

Source: San Diego Gas & Electric Company

Figure C-5: Power Flow across the PCC for Test ACT 1.2

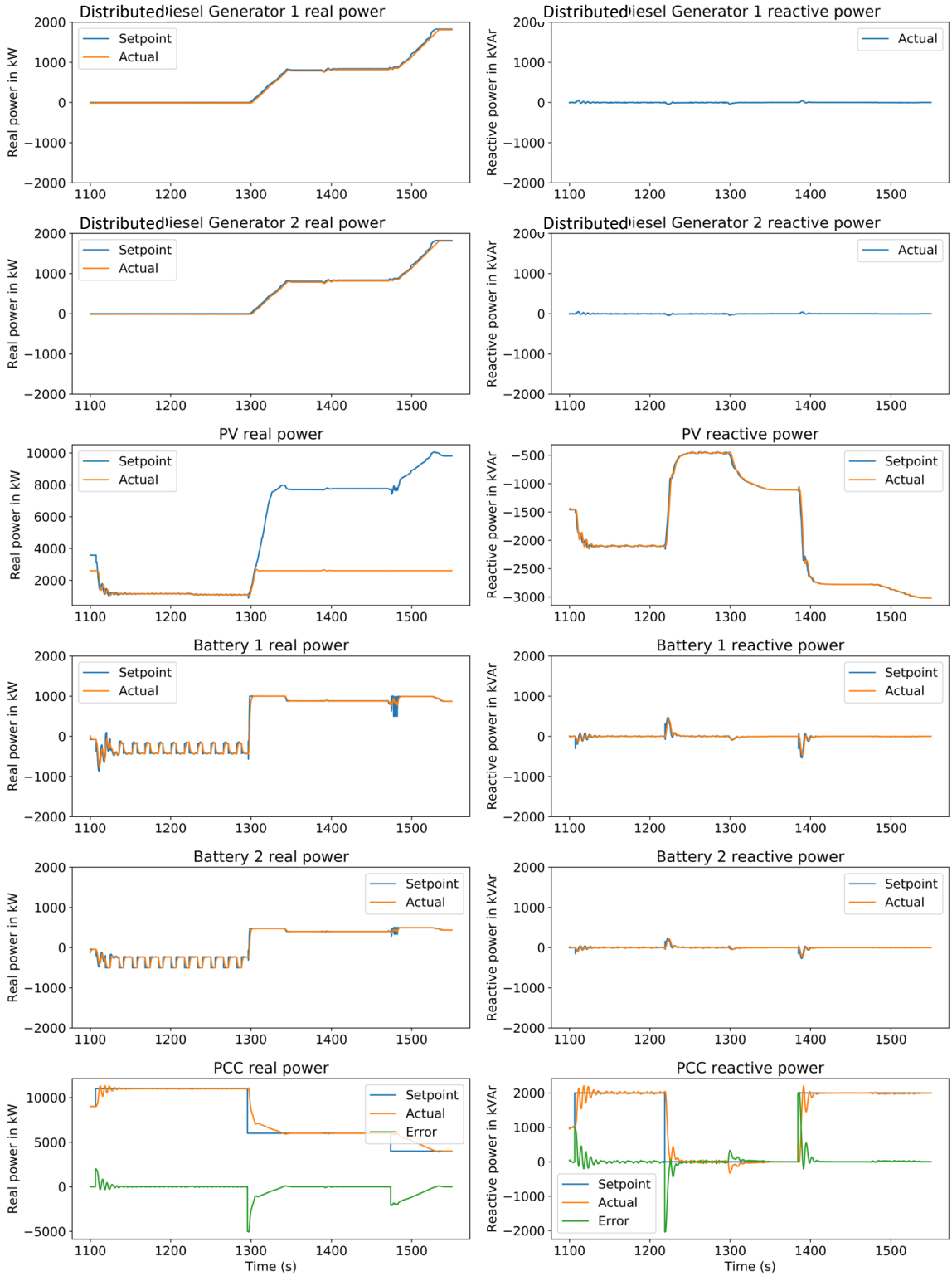

Source: San Diego Gas & Electric Company

Results for Test ACT1.3: Real and Reactive Power Tracking with Low Load and High PV Generation

The load profiles and target power flows across the PCC are shown in Figure C-6. A constant solar irradiance of 900 W/m^2 was used. The ACT was able to track the real and reactive power set points in this test with the help of the distributed generators, as shown in Figure C-7. The peak instantaneous errors were 20 MW and 6 MVAR respectively and the RMSEs over the test duration were 3.259 MW and 0.742 MVAR respectively.

Figure C-6: Load and Target Power Flow across the PCC for Test ACT 1.3

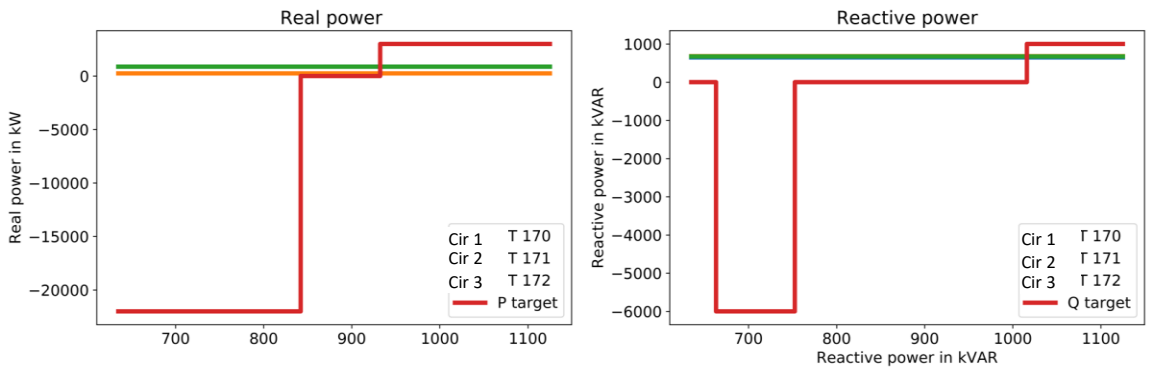

Source: San Diego Gas & Electric Company

Figure C-7: Load and Target Power Flow across the PCC for Test ACT 1.3

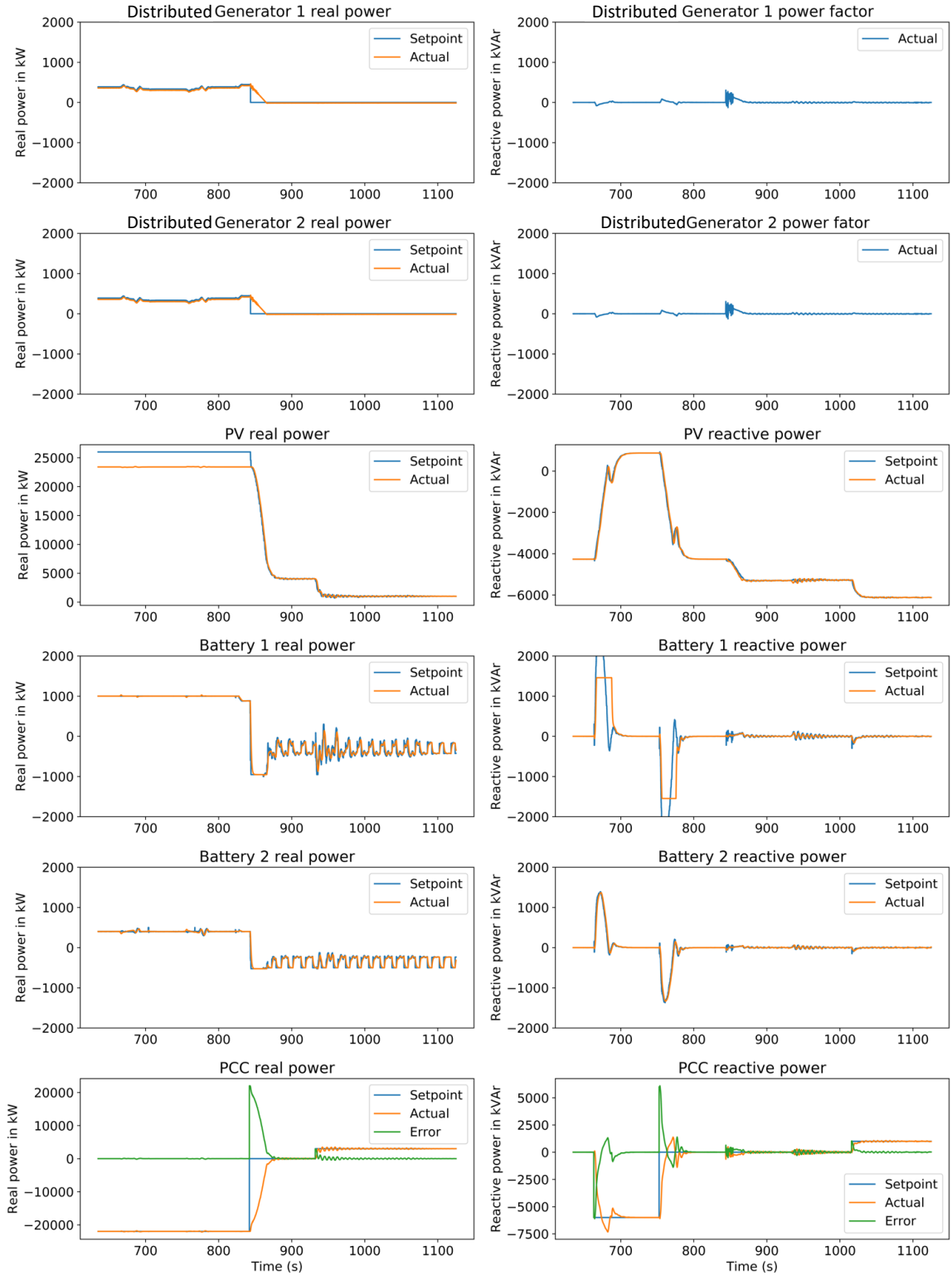

Source: San Diego Gas & Electric Company

Results from Test Case ACT2: Real and Reactive Power Disturbance Mitigation

The purpose of this test case was to demonstrate the ability of the ACT functions to ensure that the P,Q across the PCC can track (follow) P_R,Q_R when subjected to changing microgrid load and generation conditions. For this test case, the reference signals are constants and the load or solar irradiance is changing.

Results for Test ACT2.1: Real and Reactive Power Disturbance Mitigation with High Load Variability and High PV Generation

The load profiles and target power flows across the PCC are shown in Figure C-8. These load profiles have high variability because the ratio of the perturbation in load power to the mean of the load power is high. These load profiles are based on actual load profiles and variability was added to it. A constant solar irradiance of 900 W/m^2 was used. The ACT was able to minimize the change in the power flow across PCC to within 5 MW and 4 MVAR instantaneously as shown in Figure C-9. The RMSEs over the duration of the experiment were 0.935 MW and 0.713 MVAR respectively.

Figure C-8: Load and Target Power Flow across the PCC for Test ACT 2.1

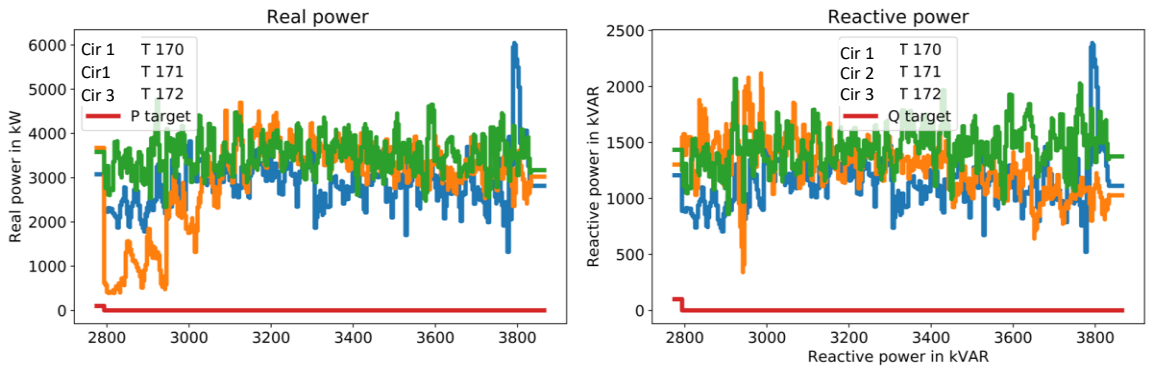

Source: San Diego Gas & Electric Company

Figure C-9: Power Flow across the PCC for Test ACT 2.1

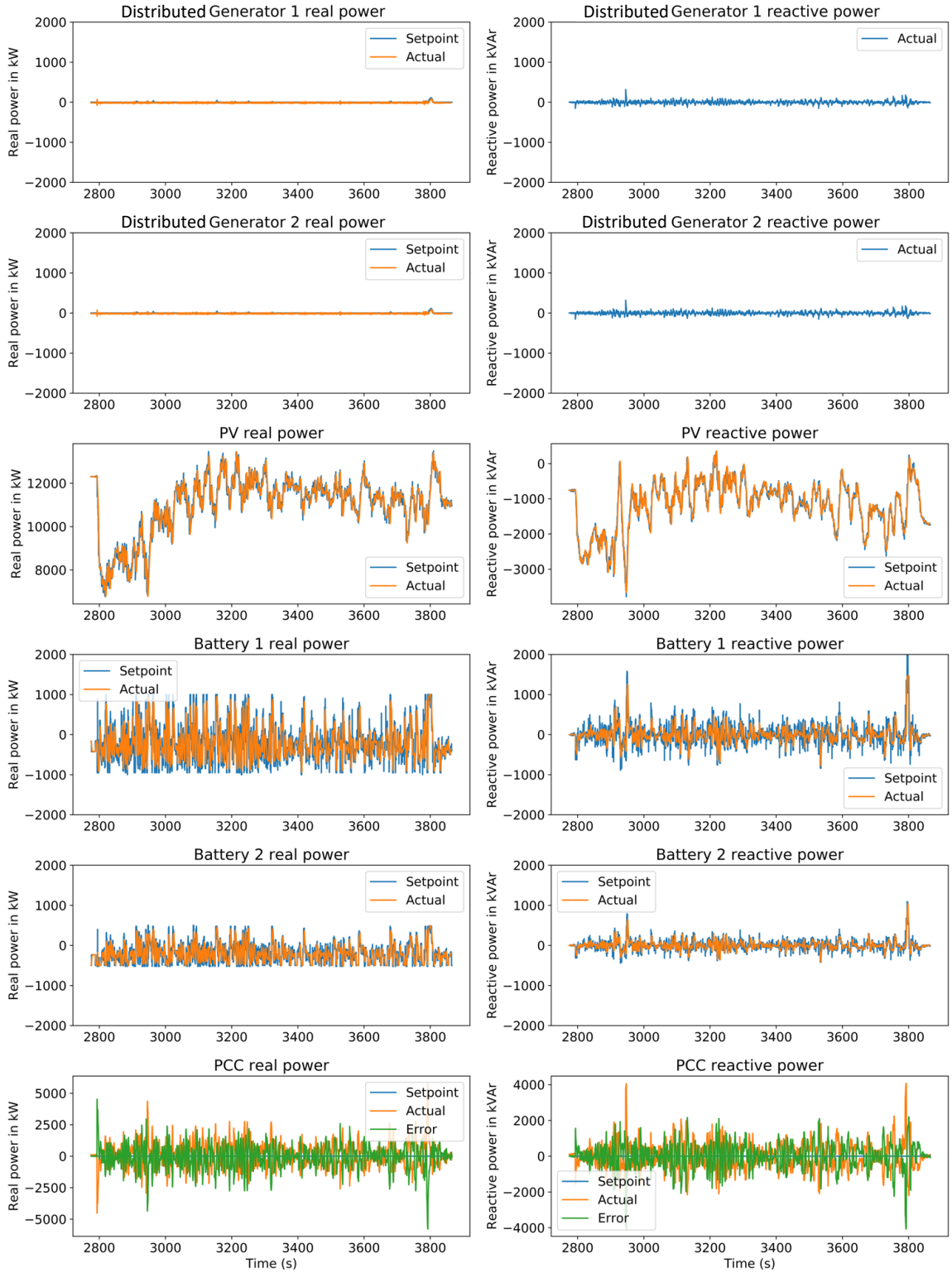

Source: San Diego Gas & Electric Company

Results for Test ACT2.2: Real and Reactive Power Disturbance Mitigation with High Load Variability and Low PV Generation

The load profiles and target power flows across the PCC should be the same as for Test ACT2.1 and a constant solar irradiance of 100 W/m^2 should be used so that the PV generation is low. Due to time constraints, this test was not simulated.

Results for Test ACT2.3: Real and Reactive Power Disturbance Mitigation with Low Load Variability and High PV Generation

The load profiles and target power flows across the PCC are shown in Figure C-10. These load profiles have low variability. A constant solar irradiance of 900 W/m^2 was used so that the PV generation could be high and therefore the PV was primarily used to support the load. The ACT was able to mitigate the load variability, as shown in Figure C-11 with peak instantaneous errors of 4 MW and 1 MVAR respectively and RMSEs over the test duration of 0.286 MW and 0.172 kVAR respectively.

Figure C-10: Load and Target Power Flow across the PCC for Test ACT2.3

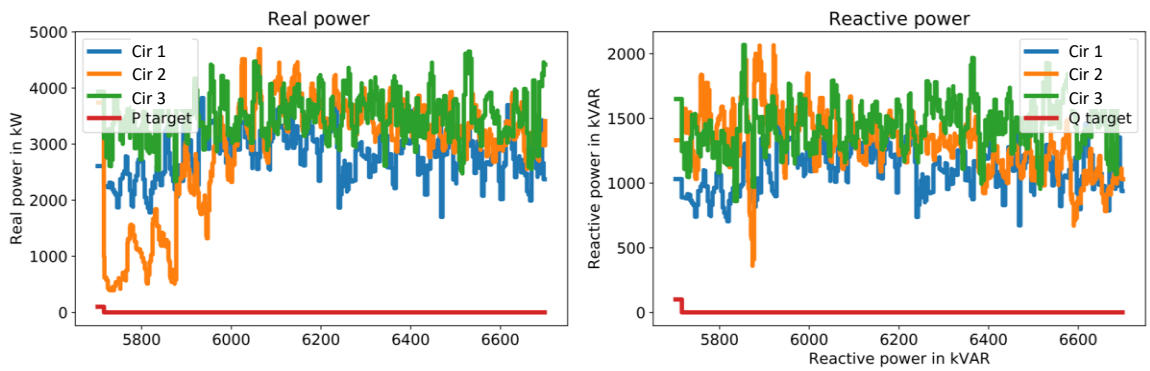

Source: San Diego Gas & Electric Company

Figure C-11: Power Flow across the PCC for Test ACT 2.3

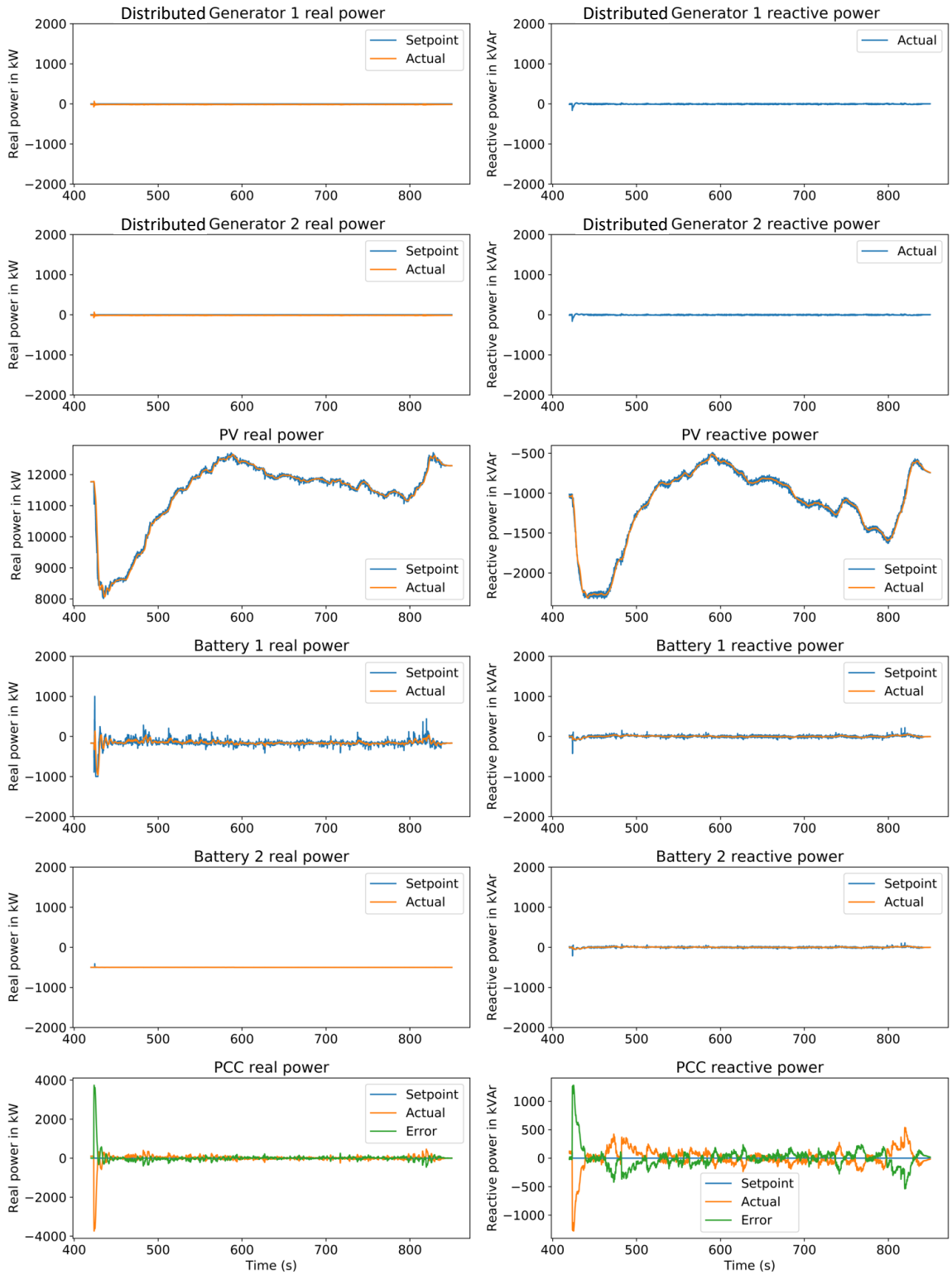

Source: San Diego Gas & Electric Company

Results for Test ACT2.4: Real and Reactive Power Disturbance Mitigation for a Low to High PV Generation Change under High Load

The load profiles, solar irradiation, and target power flows across the PCC are shown in Figure C-12. The loads are constant and the solar irradiation changes. The ACT dispatched the distributed generators until the PV generation was high enough to support the load. However, the distributed generators could not support all of the load, so there was a significant error in active power at the start of the experiment. Once enough PV was available, the ACT was able to mitigate the solar irradiance changes, as shown in Figure C-13. However, there was an abrupt change in active power set points to the generators at about 1,550 seconds, and after that, there were significant fluctuations in the PV and battery power until the generators turned off.

Figure C-12: Load, Solar Irradiance, and Target Power Flow across the PCC for Test ACT 2.4

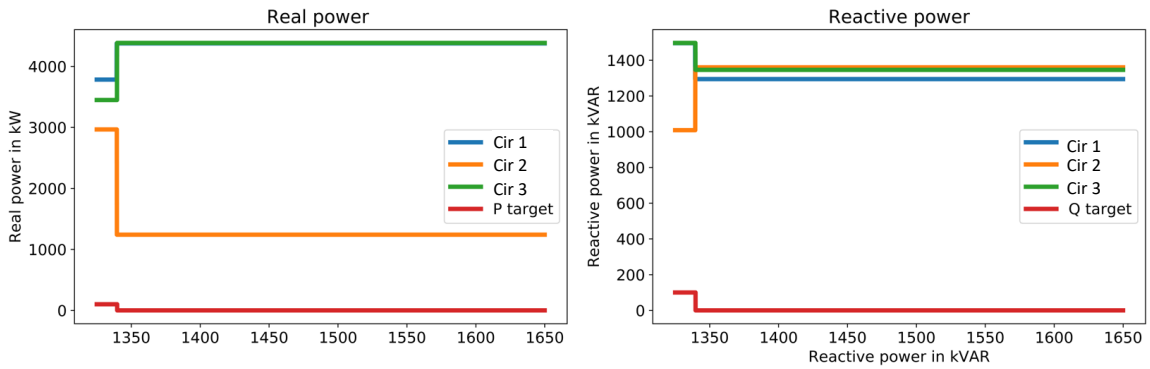

(a) Real and reactive power load with PCC target

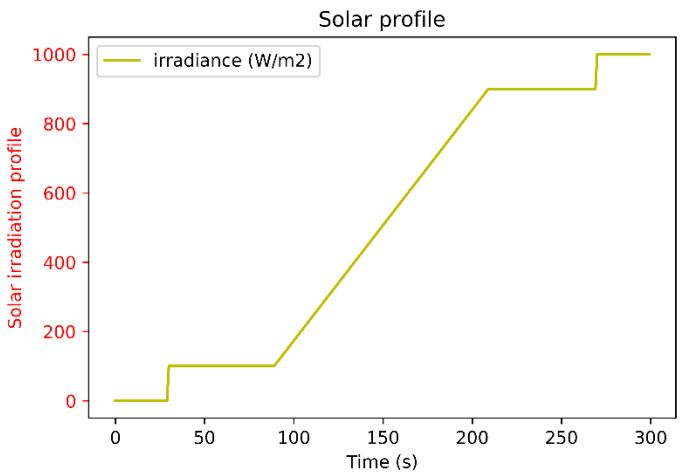

(b) Solar Irradiance Profile

Source: San Diego Gas & Electric Company

Figure C-13: Power Flow across the PCC for Test ACT 2.4

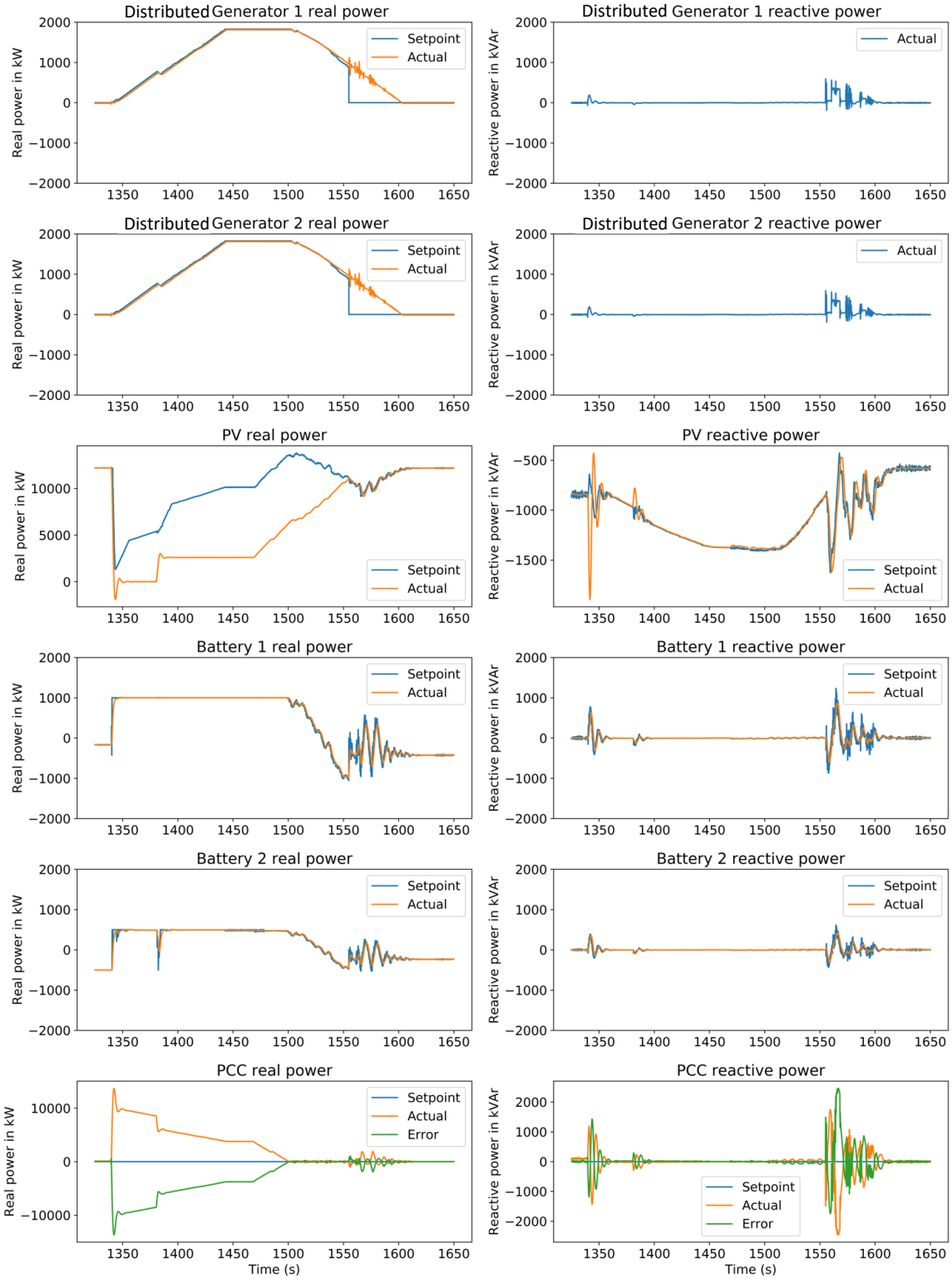

Source: San Diego Gas & Electric Company

Results from Test Case ACT3: Frequency Disturbance Mitigation

This test case should demonstrate the ability of the ACT functions to reduce frequency fluctuations at the PCC of the microgrid. This capability was not available in the ACT at the time of testing and therefore this test case was not simulated.

APPENDIX D:
Technology / Knowledge Transfer Activities

Table D-1: Information Activities 2015-2018

#	Year	Date	Tech Transfer Product	Presented / Organized by:	Location	Description	Comments/Notes/URL	# of Est. People Reached	Tour Guests
1	2015	17-Feb	SDG&E Gets $5M Grant to Expand Borrego Springs Microgrid	PR Newswire		SAN DIEGO, Feb. 17, 2015 /PRNewswire/ -- The California Energy Commission (CEC) recently awarded San Diego Gas & Electric (SDG&E) a nearly $5 million grant to expand the innovative Borrego Springs Microgrid…	http://www.prnewswire.com/news-releases/sdge-receives-5-million-grant-to-expand-borrego-springs-microgrid-300037273.html	-	-
2	2015	17-Feb	SDG&E Gets $5M Grant to Expand Borrego Springs Microgrid	KPBS	San Diego	San Diego Gas & Electric announced Tuesday that a $5 million state grant will allow the utility to expand a solar-powered microgrid in the …	http://www.kpbs.org/news/2015/feb/17/sdge-gets-5m-grant-expand-borrego-springs-microgri/	-	-
3	2015	17-Feb	SDG&E obtains $5 million grant to expand Borrego Springs Microgrid	Allen Matkins Firm Website		San Diego Gas & Electric (SDG&E) announced Tuesday that a $5 million state grant will allow the utility to expand a solar-powered microgrid in the desert to provide for all of the electricity needs in Borrego Springs.	http://www.allenmatkins.com/en/Publications/Newsletters/Renewable-Energy-Update/2015/02/February-20-2015.aspx	-	-
4	2015	17-Feb	SDG&E Gets $5M Grant to Expand Borrego Springs Microgrid	SDG&E Newsroom	San Diego	SAN DIEGO, Feb. 17, 2015 – The California Energy Commission (CEC) recently awarded San Diego Gas & Electric (SDG&E) a nearly $5 million grant to expand the innovative Borrego Springs Microgrid…	http://www.sdge.com/newsroom/press-releases/2015-02-17/sdge-receives-5-million-grant-expand-borrego-springs-microgrid	-	-
5	2015	17-Feb	SDBJ: SDG&E Receives $5 Million Grant to Expand Microgrid	San Diego Business Journal	San Diego, CA	San Diego Gas & Electric (SDG&E) announced it has received a $5 million grant from the California Energy Commission to expand the Borrego Springs Microgrid…			

#	Year	Date	Tech Transfer Product	Presented / Organized by:	Location	Description	Comments/Notes/URL	# of Est. People Reached	Tour Guests
6	2015	18-Feb	Californian utility awarded $5m grant for solar microgrid expansion	pv magazine		San Diego Gas & Electric will use the monies awarded by the California Energy Commission to expand the Borrego Springs Microgrid to enable it to operate entirely on renewable energy.	http://www.pv-magazine.com/news/details/beitrag/californian-utility-awarded-5m-grant-for-solar-microgrid-expansion_100018271/#axzz45uibGh2H	-	-
7	2015	18-Feb	SDG&E to Create One of Largest Renewable Energy Microgrids in the US	Microgrid Knowledge		San Diego Gas & Electric plans to create one of the largest renewable energy microgrids in the United States with the help of a $5 million state grant it received earlier this month.	http://microgridknowledge.com/sdge-create-one-largest-renewable-energy-microgrids-us/	-	-
8	2015	18-Feb	San Diego Gas and Electric gets $5M to expand Borrego Springs Microgrid	SmartGrid News. com		San Diego Gas and Electric (SDG&E) has been awarded nearly $5 million from the California Energy Commission (CEC) to expand their Borrego Springs Microgrid.	http://www.smartgridnews.com/story/san-diego-gas-and-electric-gets-5m-expand-borrego-springs-microgrid/2015-02-18	-	-
9	2015	20-Feb	SDG&E receives $5 million grant to expand Borrego Springs Microgrid	PowerUp - SDG&E Internal Website	San Diego	On Feb. 17, SDG&E announced that the California Energy Commission (CEC) recently awarded San Diego Gas & Electric (SDG&E) a nearly $5 million grant to expand the innovative Borrego Springs Microgrid.	http://powerup.sdge.com/news/2015-0220-sdge-receives-5million-grant-expand-borrego-springs-microgrid.cfm	-	-
10	2015	20-Feb	SDG&E obtains $5 million grant to expand Borrego Springs Microgrid	California Carbon.info		(Source: KPBS) San Diego Gas & Electric (SDG&E) announces its receipt of a $5 million state grant that will enable the expansion of a solar-powered microgrid in Borrego Springs	http://californiacarbon.info/2015/02/20/sdge-obtains-5-million-grant-expand-borrego-springs-microgrid/	-	-
11	2015	20-Feb	Microgrids, SDG&E and NRG Demonstrate the Future	Microgrid Knowledge		Momentum is building for alternative utility business models, and California is once again a leading state.	http://microgridknowledge.com/microgrids-sdge-nrg-demonstrate-future/	-	-

#	Year	Date	Tech Transfer Product	Presented / Organized by:	Location	Description	Comments/Notes/URL	# of Est. People Reached	Tour Guests
12	2015	23-Feb	SDG&E Integrates Electric Vehicles and Energy Storage Systems into California's Energy and Ancillary Service Markets	PR Newswire		... and Borrego Springs Microgrid," added Avery. "Those innovative projects demonstrated that aggregating diverse resources like solar, energy …	http://www.prnewswire.com/news-releases/sdge-integrates-electric-vehicles-and-energy-storage-systems-into-californias-energy-and-ancillary-service-markets-300040007.html	-	-
13	2015	25-Feb	San Diego Gas and Electric gets $5M to expand Borrego Springs Microgrid	NTS-AT Advanced Technology		San Diego Gas and Electric (SDG&E) has been awarded nearly $5 million from the California Energy Commission (CEC) to expand their Borrego Springs Microgrid.	http://smartgrid.testing-blog.com/2015/02/25/san-diego-gas-and-electric-gets-5m-to-expand-borrego-springs-microgrid/	-	-
14	2015	27-Feb	SDG&E's James Avery on the Promise of EVs and the Pitfalls of Solar	Greentech Media		SDG&E is also investing millions in a distributed energy resources management system and an expansion of the Borrego Springs Microgrid …	http://www.greentechmedia.com/articles/read/Jim-Avery-on-the-Promise-of-EVs-and-the-Pitfalls-of-Solar	-	-
15	2015	3-Mar	Micro-grid sprouting on outskirts of San Diego	San Diego Union-Tribune		San Diego Gas & Electric is expanding an experimental micro-grid at Borrego Springs that is designed to run on renewable energy independently of the regional power grid.	http://www.sandiegouniontribune.com/news/2015/mar/03/borrego-micro-grid-expands/	-	-
16	2015	6-Mar	Current and Future Role of Microgrids	Tom Bialek, Chief Engineer, SDG&E	Sacramento, CA	Presented at the Staff WorkshopMicrogrid Assessment and Recommended Future RD&D Investments for theState of California	http://www.energy.ca.gov/research/notices/2015-03-06_workshop/2015-03-06_agenda.pdf	50	
17	2015	11-Mar	Borrego Springs Microgrid Demonstration Overview	Neal Bartek SDG&E	San Diego, CA	Presentation for the Society of American Military Engineers	http://samesandiego.org/wp-content/uploads/2015/05/March11PresentationBorregoSpringsMicroGridProject1.pdf	65	-
18	2015	16-Mar	Borrego Springs Microgrid Tour - Arizona Hopi Indian Tribe (Brian Roppe)	Neal Bartek SDG&E	Borrego Springs, CA	Gave tour to Hopi Tribe Council Members	5 Guests + 3 SDG&E = 11 Total	11	11

#	Year	Date	Tech Transfer Product	Presented / Organized by:	Location	Description	Comments/Notes/URL	# of Est. People Reached	Tour Guests
19	2015	25-Mar	Clean Technica: San Diego Microgrid Expanding	Clean Technica		With help from a grant from California, SDG&E is expanding a renewable micro grid near San Diego to provide renewable power for up to 2,800 customers.			
20	2015	8-Apr	2015 Earth Day @ - DER Team Booth highlights Borrego Springs Microgrid and other projects	SDG&E Green Team	SDG&E Century Park Campus - San Diego, CA	Over +1,000 attendees at SDG&E's Century Park Campus - Discussed Borrego Springs Microgrid and other DER Team Projects	+1000 attendees to the Earth Fair	1000	
21	2015	11-Apr	ABDNHA - Water & Energy: Desert Living 2015	ABDNHA	Borrego Springs, CA	On the topic of energy: Tom Bialek, Chief Engineer of Smart Grid Technologies, Sempra Energy, is among the most knowledgeable engineers in America directly working with the technologies and the science behind the energy issues of today and the future: solar, microgrids, smart grids, distributed generation, transmission, renewables, and battery storage.	http://www.abdnha.org/desertliving/	60	
22	2015	11-Apr	KPBS Calendar Post - Water & Energy: Desert Living 2015	KPBS	San Diego, CA	On the topic of energy: Tom Bialek, Chief Engineer of Smart Grid Technologies, Sempra Energy, is among the most knowledgeable engineers in America directly working with the technologies and the science behind the energy issues of today and the future: solar, microgrids, smart grids, distributed generation, transmission, renewables, and battery storage.	http://www.kpbs.org/events/2015/apr/11/water-energy-desert-living-2015/?et=48814		
23	2015	13-Apr	Northern Arizona University	Neal Bartek SDG&E	Northern Arizona University, AZ	Presentation about DG and electric vehicles, and microgrids to students at NAU	Over +20 Guests	20	
24	2015	13-Apr	Hopi Indian Tribal Council - Arizona - Microgrid Presentation by Neal Bartek	Neal Bartek SDG&E	Northern Arizona University, AZ	Borrego Springs Microgrid Presentation given by Neal Bartek to several tribal members followed by a meeting to discuss next steps	Over +15 Guests	15	

#	Year	Date	Tech Transfer Product	Presented / Organized by:	Location	Description	Comments/Notes/URL	# of Est. People Reached	Tour Guests
25	2015	16-Apr	Borrego Springs Microgrid an important part of utility's future	SmartGrid News. com		In September 2013, a large thunderstorm rolled through the Borrego Springs area of California, adding to a year that was filled with several natural disasters -- including wind storms and flash flooding.	http://www.smartgridnews.com/story/borrego-springs-microgrid-important-part-utilitys-future/2015-04-16		
26	2015	27-Apr	Utilities explore the microgrid value proposition	Intelligent Utility		Utility distribution microgrids (UDMs) are emerging as a new ... a distribution feeder in Borrego Springs while energizing a large solar PV farm, ...	http://www.intelligentutility.com/article/15/04/utilities-explore-microgrid-value-proposition	-	-
27	2015	27-Apr	Borrego Springs Microgrid Tour - SEPA USC - Solar Electric Power Association - Utility Solar Conference	Tom Bialek & Neal Bartek - SDG&E	Borrego Springs, CA	The Utility Solar Conference (USC) is a utility-only forum to learn from experts, exchange ideas, and talk through various strategies and service solutions in an intimate environment free from outside industry pressures and influences.	Over +35 Guests	35	35
28	2015	1-May	When Will We Get Smart Grids?	MIT Technology Review		In the United States, these "microgrids" currently exist mainly at ... million to connect a microgrid in Borrego Springs to a solar facility with battery ...	https://www.technologyreview.com/s/537046/when-will-we-get-smart-grids/	-	-
29	2015	7-May	EPC-14-060 Kickoff Meeting Borrego Springs	Tom Bialek & Neal Bartek - SDG&E	Borrego Springs Chamber of Commerce	Kick-Off Meeting & Tour as part of the CEC EPC-14-060 Project	18 Guests attended	18	18
30	2015	7-May	Borrego Springs Community Sponsor Group Presentation	Neal Bartek SDG&E	Borrego Springs, CA	Presentation given to the Borrego Springs Community Sponsor Group - The principal function of a sponsor group is to be an information link between the community and the County of San Diego on matters dealing with planning and the use of land in their community	15 Guests attended	15	
31	2015	22-May	Microgrid and Water Recurrent Worries for Borrego Springs	Borrego Sun Newspaper	Borrego Springs, CA	Two informational presentations were given to the Borrego Springs Community Sponsor Group on May 7. The first was a briefing on the microgrid from representatives of SDG&E. The microgrid is a subset of the larger electrical grid,	http://www.borregosun.com/story/2015/05/21/news/microgrid-and-water-recurrent-worries-for-borrego-springs/194.html	-	-

#	Year	Date	Tech Transfer Product	Presented / Organized by:	Location	Description	Comments/Notes/URL	# of Est. People Reached	Tour Guests
32	2015	28-May	National Town Meeting on Demand Response and Smart Grid - Washington, DC - Microgrids from a Utility's Perspective	Neal Bartek SDG&E	Washington, DC	As the forum in the U.S. for all things demand response and smart grid, the National Town Meeting on Demand Response and Smart Grid® features speakers who take the measure of the state of the industry, indicate what's to come in the year ahead, and report on best practices and projects in the field.	Over +100 Guests	100	
33	2015	29-May	Smart Grid and DR Conference: We Need New Business Models to Spur Integration of Microgrids and Distributed Energy Resources	Powerit Solutions		Neal Bartek, distributed energy resources manager for San Diego Gas & Electric, talked about the utility's experience with its Borrego Springs demonstration microgrid	http://www.poweritsolutions.com/blog/?detail=yes&id=1102		
34	2015	1-Jun	Microgrid Powers Borrego Springs to Avoid Major Outage	SDG&E Newsroom		(SDG&E) Microgrid powered the entire community of Borrego Springs during ... on the Borrego Springs Microgrid to avoid the impact of a major outage. The Borrego Springs Microgrid uses ... launch the Borrego Springs Microgrid. By avoiding a lengthy outage, the Microgrid demonstrated its …	http://www.sdge.com/newsroom/press-releases/2015-06-01/microgrid-powers-borrego-springs-avoid-major-outage	-	-
35	2015	1-Jun	Electric Light & Power: VIDEO - Microgrid powers Borrego Springs to avoid power outage	Electric Light & Power		Video & Article - In late May, San Diego Gas & Electric's (SDG&E) microgrid powered the entire community of Borrego Springs during planned grid maintenance, thus avoiding major service interruptions to customers.	http://www.elp.com/articles/2015/06/microgrid-powers-borrego-springs-to-avoid-power-outage.html		
36	2015	1-Jun	Borrego Springs Microgrid Averts Long Outage During Lightning Strike Repair	Microgrid Knowledge		San Diego Gas & Electric reported today that the Borrego Springs Microgrid averted a major outage for an entire community in late May as the utility repaired damage from a lightning strike.	http://microgridknowledge.com/borrego-springs-microgrid-averts-long-outage-during-lightning-strike-repair/	-	-
37	2015	1-Jun	Microgrid powers Borrego Springs for 9-hours	Fox 5 News	San Diego	SAN DIEGO – All the electricity delivered to Borrego Springs during a nearly nine-hour period last month came from a nearby "microgrid," in …	http://fox5sandiego.com/2015/06/01/microgrid-powers-borrego-springs-for-9-hours/	-	-

#	Year	Date	Tech Transfer Product	Presented / Organized by:	Location	Description	Comments/Notes/URL	# of Est. People Reached	Tour Guests
38	2015	1-Jun	Microgrid Powers Borrego Springs To Avoid Major Outage	PR Newswire		SAN DIEGO, June 1, 2015 /PRNewswire/ -- In late May, San Diego Gas & Electric's (SDG&E) Microgrid powered the entire community of Borrego Springs during planned grid maintenance…	http://www.prnewswire.com/news-releases/microgrid-powers-borrego-springs-to-avoid-major-outage-300091750.html	-	-
39	2015	2-Jun	Entire Borrego Springs Community Now Powered by Microgrid	KPBS		All the electricity delivered to Borrego Springs during a nearly nine-hour period last month came from a nearby "microgrid," in what's believed to be the first time that such a facility powered an entire community in the U.S., according to San Diego Gas & Electric.	http://www.kpbs.org/news/2015/jun/01/entire-borrego-springs-community-now-powered-micro/	-	-
40	2015	2-Jun	Microgrid Power Borrego Springs to Avoid Major Outage	Smartgridobserver.com		In addition to onsite generation and energy storage systems, SDG&E used NRG Energy's nearby 26-megawatt Borrego Solar facility to supply electricity to all 2,800 customers in the area for ten hours.	http://smartgridobserver.com/n6-2-15-Borrego-Springs-microgrid.htm	-	-
41	2015	3-Jun	SDG&E microgrid uses solar, storage to avoid outage in small town	Utility Dive		The utility used the Borrego Springs Microgrid after the transmission line that usually feeds the community was damaged by lightning. SDG&E …	http://www.utilitydive.com/news/sdge-microgrid-uses-solar-storage-to-avoid-outage-in-small-town/400147/	-	-
42	2015	3-Jun	Borrego Springs first community fully-powered by microgrid	SmartGridNews. com		San Diego Gas & Electric (SDG&E) has continued to use their microgrid in the Borrego Springs community and, in May, had to use it to power the entire community during a planned grid outage.	http://www.smartgridnews.com/story/borrego-springs-first-community-fully-powered-microgrid/2015-06-03	-	-
43	2015	3-Jun	Borrego Springs first community fully-powered by microgrid	FACEBOOK PAGE - UPME Unidad de Planeación Minero Energética - República de Colombia		San Diego Gas & Electric (SDG&E) has continued to use their microgrid in the Borrego Springs community and, in May, had to use it to power the entire community during a planned grid outage.	https://www.facebook.com/permalink.php?story_fbid=1064433486920144&id=374839812546185	-	-

#	Year	Date	Tech Transfer Product	Presented / Organized by:	Location	Description	Comments/Notes/URL	# of Est. People Reached	Tour Guests
44	2015	3-Jun	SDG&E microgrid powers Borrego Springs to avoid service interruptions	California Carbon.info		(Source: Benzinga) San Diego Gas & Electric's (SDG&E) microgrid powered the entire community of Borrego Springs, during planned grid maintenance, in late May, thus avoiding service interruptions to customers.	http://californiacarbon.info/2015/06/03/sdge-microgrid-powers-borrego-springs-avoid-service-interruptions-2/	-	-
45	2015	4-Jun	Borrego Springs' Microgrid Powers the Town Successfully	Borrego Sun Newspaper	Borrego Springs, CA	The Borrego Springs Microgrid was tested on May 21 during a nine hour period that was required to repair transmission poles. SDG&E said it was able to use the microgrid to deliver electricity to Borrego Springs from the nearby 26-megawatt Borrego Solar facility during the...	http://www.borregosun.com/story/2015/06/04/news/borrego-springs-microgrid-powers-the-town-successfully/261.html	-	-
46	2015	8-Jun	Borrego Springs first community fully-powered by microgrid	eiXtra - Newsletter of Electrical Equipment & Medical Imaging Manufacturers - Feature Story		San Diego Gas & Electric (SDG&E) has continued to use their microgrid in the Borrego Springs community and, in May…	https://www.nema.org/news/EiExtra/20150608eiXtra.htm	-	-
47	2015	10-Jun	Industrial Environmental Association - Speaker	Neal Bartek, SDG&E	San Diego, CA	The Industrial Environmental Association (IEA) is a non-profit association based in San Diego, California, that promotes responsible environmental laws and regulations, provides a voice on a variety of environmental issues, and offers educational opportunities for manufacturers and associated organizations in the region.	8 Guests	8	
48	2015	6-Jul	Inside the nation's first renewables-plus-storage microgrid	Utility Dive		Borrego Springs, California, sits less than 100 miles from San Diego, but in terms of electric reliability the two places were once worlds apart…	http://www.utilitydive.com/news/inside-the-nations-first-renewables-plus-storage-microgrid/401476/	-	-
49	2015	7-Jul	Borrego Springs Microgrid - First of Its Kind	Borrego Sun Newspaper	Borrego Springs, CA	Borrego Springs is served by a transmission line that traverses sixty miles, making it susceptible to wild weather and wildfires. According to SDG&E's chief development officer, Jim Avery, it was after wildfires knocked out power in 2007 for two days that they began looking for	http://www.borregosun.com/story/2015/07/02/news/borrego-springs-microgrid-first-of-its-kind/505.html	-	-

#	Year	Date	Tech Transfer Product	Presented / Organized by:	Location	Description	Comments/Notes/URL	# of Est. People Reached	Tour Guests
50	2015	7-Jul	California's Distributed Energy Grid Plans: The Next Steps	Greentech Media		SDG&E is planning demonstrations at its Borrego Springs Microgrid and at other unspecified locations, and PG&E is targeting solar-rich Fresno …	http://www.greentechmedia.com/articles/read/californias-distributed-energy-grid-plans-the-next-steps	-	-
51	2015	8-Jul	SDG&E DER Lunch & Learn Presentation: Borrego Springs May 21 Planned Outage Case Study	Justin Arakaki & Alfonso Orozco - SDG&E	SDG&E Lightwave - San Diego, CA	Overview, update and lessons learned presented at an in-house presentation series	55 Guests	55	
52	2015	9-Jul	Presentation - Utility Role in Microgrids	Tom Bialek, Chief Engineer, SDG&E	Golden, Colorado	Part of NREL Advanced Grid Control Technologies Workshop Series	40 Guests	40	
53	2015	13-Jul	NRG Tour/Meeting - Borrego Springs Microgrid - CEC EPC-14-060	Tom Bialek & Neal Bartek - SDG&E	Borrego Springs, CA	Meeting & Tour of both the NRG Solar Farm and Borrego Springs Microgrid by NRG & SDG&E employees to discuss CEC EPC-14-060	13 Guests	13	13
54	2015	15-Jul	Moving Microgrids Beyond R&D	Alternative Energy Stocks		A microgrid is an electrical supply and use system that can operate ... such as San Diego Gas and Electric's Borrego Springs CA microgrid …	http://www.altenergystocks.com/archives/2015/07/moving_microgrids_beyond_rd.html	-	-
55	2015	23-Jul	SDG&E fires up solar-based microgrid to avoid 9-hour maintenance outage	Chartwell's Best Practices Report		San Diego Gas & Electric (SDG&E) reached a significant milestone in its continuing work with microgrid technology on May 21, when the SDG&E Borrego Springs Microgrid Demonstration Project in California powered the entire community of Borrego Springs…	-	-	-
56	2015	27-Jul	Scottish & Southern Energy - Microgrid Operations Discussions	Neal Bartek, SDG&E	San Diego, CA	Discussion on Borrego Springs Microgrid with some SSE utility leaders who are interested in the project. Set-up by Bradley Williams (VP – Oracle)	12 Guests	12	

#	Year	Date	Tech Transfer Product	Presented / Organized by:	Location	Description	Comments/Notes/URL	# of Est. People Reached	Tour Guests
57	2015	29-Jul	2nd Microgrid Development for Public and Private Sectors WEST Coast (Marcus Evans)	Speaker Neal Bartek, SDG&E Organizers Marcus Evans	Irvine, CA	Conference - Establishing a Microgrid Framework through Innovative System Designs, Technological Advances, and Regulatory Comprehension	75 Guests	75	
58	2015	29-Jul	Why the future of microgrids won't look like the past	Utility Dive		According to GTM Research, total microgrid capacity in the United States ... and San Diego Gas & Electric has 26 MW serving Borrego Springs).	http://www.utilitydive.com/news/why-the-future-of-microgrids-wont-look-like-the-past/403093/	-	-
59	2015	30-Jul	Warming up to microgrids	energybiz		Still, most microgrids in the United States serve army bases, remote ... In 2013, the transmission line to Borrego Springs was taken out several …	http://www.energybiz.com/article/15/06/warming-microgrids	-	-
60	2015	15-Aug	SDG&E Microgrid Uses Solar Facility to Avoid Outages	Electrical Contractor Power & Integrated Building Systems		San Diego Gas & Electric's (SDG&E) microgrid supplied electricity to 2,800 customers in Borrego Springs in San Diego County, Calif., on May 21, 2015, during planned grid maintenance. This marked the first time a U.S. microgrid used renewable energy to power a community, according to SDG&E.	http://www.ecmag.com/section/your-business/sdge-microgrid-uses-solar-facility-avoid-outages	-	-
61	2015	19-Aug	CPUC - ENERGY STORAGE WORKSHOP - IOU Presentations on Safety of Energy Storage	Neal Bartek, SDG&E	San Francisco, CA	Energy Storage presentations given which included the Borrego Springs Microgrid	What are the utilities' experiences installing and operating storage devices for a wide variety of applications?		
62	2015	19-Aug	CEC-Mexico Conf - EFFICIENCY, RENEWABLES AND GRID MANAGEMENT CONFERENCE	Jim Avery, SDG&E Chf Dev Ofcr of SDG&E, Development & Clean Transp	UCSD La Jolla, CA	"The Future of Microgrids" - presentation gave overview of the Borrego Springs project	Technical workshop on efficiency, renewables and grid management.		
63	2015	19-Aug	Borrego Springs Microgrid Video	Jim Avery, SDG&E Chf Dev Ofcr of SDG&E, Development & Clean Transp		Used in conjunction with Jim Avery's "The Future of Microgrids" presentation	http://www.sdge.com/smartgrid/borrego-springs-microgrid		

#	Year	Date	Tech Transfer Product	Presented / Organized by:	Location	Description	Comments/Notes/URL	# of Est. People Reached	Tour Guests
64	2015	19-Aug	SDG&E Smart Grid Website - Borrego Springs Microgrid (Includes link to video)	SDG&E Smart Grid Team		The Borrego Springs Microgrid offers a powerful example of what new Smart Grid technology can do. When this experimental project was used during an actual power emergency, it gave us and our customers a glimpse of a possible "utility of the future"…	http://www.sdge.com/smartgrid/borrego-springs-microgrid		
65	2015	21-Aug	Borrego Springs Microgrid Tour - CEC-Mexico Clean-Tech Conference	Neal Bartek & Tom Bialek, SDG&E	Borrego Springs, CA		20 Attendees	20	20
66	2015	24-Aug	California Climate Change Symposium 2015 - The premier forum for the sharing of cutting-edge research addressing the impacts of climate change on the state.	Neal Bartek, SDG&E	Sacramento, CA	Presentation - "Microgrids for Energy Resiliency"	150 Attendees	150	
67	2015	25-Aug	The 10 Questions to Ask When You Hear the Word "Microgrid"	RMI Outlet - Rocky Mountain Institute		Both SDG&E's demonstration project in Borrego Springs, CA, (recently heralded for keeping the lights on during a transmission line problem) and Konterra's solar-storage project at its Maryland corporate headquarters have made headline news as microgrids...			
68	2015	3-Sep	Power Grid Summit - 2015	Tom Bialek, Chief Engineer, SDG&E	San Diego, Ca	Presentation - "The Future of Microgrids to Solve Resilience Challenges"	30 Attendees	30	
69	2015	10-Sep	10 questions to ask before you build a microgrid	GreenBiz		For example, the Borrego Springs Microgrid serves that community and is owned and operated by the local San Diego utility, SDG&E. The U.S. …	https://www.greenbiz.com/article/10-questions-ask-you-build-microgrid	-	-

#	Year	Date	Tech Transfer Product	Presented / Organized by:	Location	Description	Comments/Notes/URL	# of Est. People Reached	Tour Guests
70	2015	14-Sep	Four Good Reasons for Community Microgrids	Energy Collective		When it islands, the microgrid turns on its on-site generation to send ... in Borrego Springs, the site of a microgrid that serves 2,800 customers.	http://www.theenergycollective.com/darekobg/2270755/four-good-reasons-community-microgrids	-	-
71	2015	15-Sep	SDG&E North County Spotlight Event - met with community leaders from several chambers and economic development organizations from North County.	DER Team	Escondido, CA	Event highlighted updated the community on SDG&E's innovative programs. This is a partnership with the following Chambers of Commerce and the San Diego North Economic Development Council - Discussed Borrego Springs Microgrid and other DER Team Projects at the DER Booth	Over 150 business owners, politicians and community leaders	150	
72	2015	23-Sep	Skin in the Game: New Case Studies Illuminate Best Practice	Energy Collective		... accelerate early deployment of new technologies, as in the case of the California Solar PV Program (SPVP) and Borrego Springs Microgrid.	http://www.theenergycollective.com/americaspowerplan/2274718/skin-game-new-case-studies-illuminate-best-practices-der-ownership-and-ope	-	-
73	2015	23-Sep	Skin in the Game: New Case Studies Illuminate Best Practice	Power Plan (Reposted Energy Collective article)		The utility-owned and operated model may be able to demonstrate and accelerate early deployment of new technologies, as in the case of the California Solar PV Program (SPVP) and Borrego Springs Microgrid.	http://americaspowerplan.com/tag/distributed-energy-resources/	-	-
74	2015	28-Sep	Inverter Capabilities Are the Biggest Limitation Facing All-Renewable Microgrids	Greentech Media		All-renewable microgrids such as the one powering Borrego Springs are likely to remain scarce for years because of inverter shortcomings, ...	http://www.greentechmedia.com/articles/read/why-the-all-renewable-microgrid-is-still-a-way-off	-	-
75	2015	28-Sep	Duke simplifies microgrid development process for NC fire department	Utility Dive		Duke Energy has developed a microgrid serving Charlotte Fire Station ... and San Diego Gas & Electric's 26 MW grid serving Borrego Springs…	http://www.utilitydive.com/news/duke-simplifies-microgrid-development-process-for-nc-fire-department/406326/	-	-

#	Year	Date	Tech Transfer Product	Presented / Organized by:	Location	Description	Comments/Notes/URL	# of Est. People Reached	Tour Guests
76	2015	Oct	SDG&E A Utility-Owned Microgrid - A Case Study on Borrego Springs	Association for Demand Response + Smart Grid		ADS chose SDG&E forthis case study for thefollowing reasons:1. The utility had adesire to exploreoptions outside ofits normalbusiness model…	http://www.demandresponsesmartgrid.org/resources/Documents/Case%20Studies/SDGE%20Borrego%20Springs%20Case%20Study%20FINAL.pdf	-	-
77	2015	5-Oct	Borrego Springs Microgrid Tour Guide Training of the DER Team	Neal Bartek, SDG&E	SDG&E Lightwave - San Diego, CA	Due to the popularity of BSM Tours…we are training other DER Team members to be tour guides - thorough overview given	3 Guests - Neal Bartek, Alfonso Orozco, Jeff Mucha	3	
78	2015	7-Oct	CEC RESCO Workshop @ SANDAG - The Energy Commission's Renewable Energy Secure Communities (RESCO) program aims to address issues with the deployment and integration of renewable energy at the community scale.	Neal Bartek, SDG&E	SANDAG Offices, San Diego, CA	Borrego Springs Microgrid Project Overview - Discussion of the efforts in the Borrego Springs effort to serve as a case study, especially since the Energy Commission is helping to fund the next phase of the project.	http://www.energy.ca.gov/research/notices/2015-10-07_workshop/presentations/03_SDG_and_E_BorregoSprings_10-7-15.pdf	30	
79	2015	9-Oct	Borrego Springs Microgrid	SDG&E Newsroom		View the Borrego Springs Microgrid video to see how SDG&E's Microgrid leveraged ... to the local community through its onsite resources.	http://www.sdge.com/smartgrid/borrego-springs-microgrid		
80	2015	14-Oct	Honey, I shrunk the grids: The emergence of 'nanogrids'	Utility Dive		Duke Energy, San Diego Gas & Electric, and Central Hudson -- along with many other utilities -- have all been working to integrate microgrids into their systems…	http://www.utilitydive.com/news/honey-i-shrunk-the-grids-the-emergence-of-nanogrids/407283/	-	-
81	2015	15-Oct	National Action Plan on Demand Response Case Study #6 - Case Study on utility-owned microgrid	ADS - Association for Demand Response Smart Grid		Report - pdf	http://www.demandresponsesmartgrid.org/resources/Documents/Case%20Studies/SDGE%20Borrego%20Springs%20Case%20Study%20FINAL.pdf	-	-

#	Year	Date	Tech Transfer Product	Presented / Organized by:	Location	Description	Comments/Notes/URL	# of Est. People Reached	Tour Guests
82	2015	16-Oct	Borrego Springs Microgrid Tour - China Energy Storage Alliance (CNESA)	Josh McIlvoy, Jeff Mucha and Alfonso Orozco, SDG&E	Borrego Springs, CA	"CNESA is China's energy storage industry association who represent over 100 Chinese and international companies across the energy storage value chain.	8 Chinese Delegates	8	8
83	2015	23-Oct	Case study on utility-owned microgrid released by the Association for Demand Response & Smart Grid	PR Newswire		The Association for Demand Response & Smart Grid (ADS) released a new case study today that examines how San Diego Gas & Electric's Borrego Springs Microgrid was…	http://www.prnewswire.com/news-releases/case-study-on-utility-owned-microgrid-released-by-the-association-for-demand-response--smart-grid-300165400.html	-	-
84	2015	24-25 Oct	2015 Borrego Days - Neal Bartek on Saturday, Frank Goodman on Sunday	Neal Bartek, Frank Goodman SDG&E	Borrego Springs, CA	Borrego Days is an annual community event that spans 3 days with food, entertainment, booths and events. SDG&E has a booth and talks to the community about the local microgrid project	DER Team provided a Microgrid Spokesperson to share progress and info on the Microgrid with the community		
85	2015	25-Oct	San Diego Gas & Electric's Borrego Springs Microgrid Studied by ADS	Transmission and Distribution World		ADS released a new case study that examines how San Diego Gas & Electric's Borrego Springs Microgrid…	http://tdworld.com/distribution/san-diego-gas-electrics-borrego-springs-microgrid-studied-ads	-	-
86	2015	26-Oct	Study: SDG&E's Borrego Springs Microgrid proves useful, but complicated	SNL		San Diego Gas & Electric Co.'s Borrego Springs Microgrid started out as a research and development project, but violent storms and extreme desert heat have made the effort a real-world necessity.	https://www.snl.com/InteractiveX/article.aspx?CdId=A-34271985-12583	-	-
87	2015	26-Oct	Microgrid Conference - EUCI in Chicago Illinois - Microgrid Deployment Session	Neal Bartek, SDG&E	Illinois Institute of Technology in Chicago, IL	This conference will bring together the industry's most knowledgeable microgrid professionals to share their experiences and vision for the microgrid marketplace.	70 Attendees		
88	2015	27-Oct	Utility microgrid: Lessons learnt from California's SDG&E	Metering and Smart Energy International		Utility microgrid: Lessons learnt from California's SDG&E ... how San Diego Gas & Electric's Borrego Springs Microgrid was developed.	http://www.metering.com/utility-microgrid-lessons-learnt-from-californias-sdge/	-	-

#	Year	Date	Tech Transfer Product	Presented / Organized by:	Location	Description	Comments/Notes/URL	# of Est. People Reached	Tour Guests
89	2015	28-Oct	GreenBiz VERGE Conf - Off the Grid: Microgrid Owner/Operator Perspectives - presentation by Neal Bartek	Neal Bartek SDG&E	San Jose, CA	VERGE is GreenBiz Group's global event series focusing on the technologies and systems that accelerate sustainability solutions across sectors in a climate-constrained world. The event brings together the world's largest companies, technology innovators, utilities and cities, creating a broad ecosystem of players to accelerate opportunities for business, the environment and society.	60 attendees. The operator of the VERGE Interconnect microgrid leads a presentation on how microgrids are being deployed and operated. The session will examine actual results and benefits being realized through the operation of various types of microgrids, including the equipment required to implement a system, power systems control technology, timing and complexity of the build and benefits to both savings and resiliency. Featured speakers include owners and operators from Necker Island and other innovative microgrid developments.	60	
90	2015	28-Oct	Microgrid Recognized as Innovative	Borrego Sun Newspaper	Borrego Springs, CA	A new case study highlighting SDG&E's Borrego Springs Microgrid has been released by the Association for Demand Response & Smart Grid (ADS) and the Demand Response Coordinating Committee last week examining how the site was developed…	http://www.borregosun.com/story/2015/10/28/news/microgrid-recognised-as-innovative/1308.html	-	-
91	2015	28-Oct	Key Lessons from San Diego Gas & Electric's Utility-Owned Microgrid	Smartgridobserver.com		A recently published case study by the Association for Demand Response & Smart Grid (ADS) examines the latest updates and lessons learned from SDG&E's Borrego Springs Microgrid project.	http://smartgridobserver.com/microgrids.htm	-	-
92	2015	29-Oct	Borrego Springs Microgrid Tour - Borrego Water District & SDG&E Business Optimization and Financial & Strategic Analysis Departments	Neal Bartek & Josh McIlvoy, SDG&E	Borrego Springs, CA		12 Business Optimization & Financial Depart + 3 DER Team + 2 Borrego Water District = 17 Total	17	17

#	Year	Date	Tech Transfer Product	Presented / Organized by:	Location	Description	Comments/Notes/URL	# of Est. People Reached	Tour Guests
93	2015	29-Oct	Dispatches from San Diego, Pt. 4 Article - CNESA - Energy Storage North America Conference and Expo . (CNESA - China Energy Storage Alliance is a non-profit industry association dedicated to promoting energy storage technology in China)	CNESA - (China Energy Storage Alliance	San Diego, CA	We wanted to make the most of our San Diego trip, and so scheduled a trip to Borrego Springs, a community two hours away hosting a 26 megawatt solar facility and a 4.5 MWh lithium-ion battery energy storage system owned and operated by San Diego Gas & Electric... (BSM Tour was given on Oct 16, 2015)	http://en.cnesa.org/latest-news/2015/10/29/dispatches-from-san-diego-pt-4	-	-
94	2015	30-Oct	Borrego Springs Microgrid Tour Guide Training	Neal Bartek, SDG&E	SDG&E Lightwave - San Diego, CA	Due to the popularity of BSM Tours…we are training other DER Team members to be tour guides - thorough overview given	Meeting - 6 Guests - Neal Bartek, Frank Goodman, Kelvin Ellis, Jeff Mucha, John Holmes, Josh McIlvoy	6	
95	2015	30-Oct	Here's how microgrids and utilities are getting along	GreenBiz		SDG&E is undertaking a project to build a microgrid in Borrego Springs, a town on the outskirts of San Diego County, which is isolated by …	https://www.greenbiz.com/article/heres-how-microgrids-and-utilities-are-getting-along	-	-
96	2015	12-Nov	Borrego Springs Microgrid Tour - City of Chula Vista (4 Guests), Groundwork SD - Cholas Creek Earth Lab Collaboration (3 Guests) and SDG&E Project Management Team (4 Guests)	Neal Bartek & Josh McIlvoy, SDG&E	Borrego Springs, CA		15 Guests Total - SDG&E and Community Leaders	15	15
97	2015	19-Nov	2015 Energy Career Connections & Sustainability Fair (Title 1 High School Event for Borrego Springs High School and 5 other schools)	SDG&E DER Team and ABDNHA	SDG&E Energy Innovation Center San Diego, CA	Community event done in conjunction with the Anza-Borrego Desert Natural History Association - DER Team organizes this event as part of our commitment to the Borrego Springs Community		200	

#	Year	Date	Tech Transfer Product	Presented / Organized by:	Location	Description	Comments/Notes/URL	# of Est. People Reached	Tour Guests
98	2015	30-Nov	A Timeline of California's Distributed Energy Future, 2015	Greentech Media		SDG&E has proposed using its existing Borrego Springs Microgrid for demonstration project E, but wants to seek out high-value circuits across ...	https://www.greentechmedia.com/squared/read/A-Timeline-of-Californias-Distributed-Energy-Future-2016-and-Beyond	-	-
99	2015	2-Dec	ACWA 2015 Fall Conference & Exhibition (Assoc. of California Water Agencies)	Neal Bartek, SDG&E	Indian Wells, CA	Presentation - "Energy Committee Program - Getting Off the Grid: Microgrids"	60 Attendees	60	
100	2015	3-Dec	2015 EPIC Innovation Symposium - Data Analytics in Support of Advanced Planning and System Operations	Neal Bartek, Frank Goodman & Yvette Oldham, SDG&E	Folsum, CA	Shared info on the Borrego Springs Microgrid- Frank Goodman was Session Organizer and gave Report to Final Plenary. Bartek & Oldman gave a presentation on the Borrego Springs Microgrid	150 Attendees	150	
101	2015	11-Dec	Borrego Springs Microgrid Tour - AMEREN Electric Utilities (Illinois) & SDG&E Emergency Operations Team (Kris Bourbois)	Neal Bartek, Josh McIlvoy, Gil Montes, SDG&E	Borrego Springs, CA		21 Guests on Tour	21	21
102	2015	11-Dec	SDG&E Emergency Operations Team - Meeting with Sheriff Billy Painter and Linda Haddock Chamber to discuss emergency plans and critical load report	Neal Bartek, SDG&E	Borrego Springs, CA	Discussion about the BSM Critical Load Report as well as meeting with the Emergency Operations Team	15 Guests at this meeting	15	
103	2015	22-Dec	7 Energy Storage Stories You Might Have Missed in 2015	Greentech Media		San Diego Gas & Electric's Borrego Springs Microgrid project was put into motion long before AB 2514. The USDOE-funded project brings …	http://www.greentechmedia.com/articles/read/7-Energy-Storage-Stories-You-Might-Have-Missed-in-2015	-	-

#	Year	Date	Tech Transfer Product	Presented / Organized by:	Location	Description	Comments/Notes/URL	# of Est. People Reached	Tour Guests
							Tech Transfer Summary 2015	2,527	158
2016									
1	2016	20-Jan	Microgrids - Berkley Lab Website	Berkley		Lists all the microgrids in the U.S.	https://building-microgrid.lbl.gov/borrego-springs	-	-
2	2016	20-Jan	Cal Poly - San Luis Obispo - Borrego Springs Microgrid Presentation by Neal Bartek	Cal Poly - San Luis Obispo Alumni - presentation by Neal Bartek, SDG&E - San Diego, CA		Overview of the Borrego Springs Microgrid	15 Guests	15	
3	2016	9-Feb	DistribuTECH - Utility Owned Microgrid Best Practices - Panel Presentation	David L. Geier - Vice President, Electric Transmission and System EngineeringSDG&E	Orlando, Florida	Microgrids are increasingly popular for adding resiliency to transmission and distribution grids. Join this panel discussion to learn about best practices for the planning, design and construction of different types of microgrids. Projects to be discussed include: the Borrego Springs Microgrid that received a recent California Energy Commission (CEC) grant for expansion...	DistribuTECH is the leading annual smart grid event. Presentation attended by over 100 Guests	100	
4	2016	10-Feb	How Arizona Public Service is preparing for the grid of the future	Utility Dive		The need for a good DERMS system to control multiple DERs is not unique to APS. At the microgrid forum on Tuesday, Jeff Geier, vice president for transmission and system engineering at SDG&E, spoke about the Borrego Springs Microgrid, one of the first renewables-plus-storage microgrids in the nation.	http://www.utilitydive.com/news/how-arizona-public-service-is-preparing-for-the-grid-of-the-future/413667/	-	-

#	Year	Date	Tech Transfer Product	Presented / Organized by:	Location	Description	Comments/Notes/URL	# of Est. People Reached	Tour Guests
5	2016	9-Feb	Electricity Use in Rural and Islanded Communities: A Workshop Supporting the Quadrennial Energy Review's Public Outreach - Presentation on "Microgrids"	Tom Bialek, Chief Engineer, SDG&E	Washington, DC	**40 Guests - Microgrids**: Discuss the potential for microgrids to improve resilience and operations. Consider new technologies and business models for decentralized generation and their implications for rural and islanded communities.	-	40	
6	2016	16-Feb	UCSD - SNU Korean Delegation Conference - 2 presentations: Borrego Springs Microgrid and SDG&E Projects	Frank Goodman, SDG&E	UCSD La Jolla, CA	This group consist of a cross-section of Korean industry, universities, and governmental agencies, their focus will be on microgrids and power system automation.	Over 25 Guests	25	
7	2016	18-Feb	Borrego Springs Microgrid Tour - UCSD SNU Korean Delegation	Neal Bartek, Tom Bialek & Jeff Mucha, SDG&E	Borrego Springs, CA	This group consist of a cross-section of Korean industry, universities, and governmental agencies, their focus will be on microgrids and power system automation.	22 Guests	22	22
8	2016	18-Feb	Borrego Springs Microgrid Tour - So Cal Edison Team	Neal Bartek, Tom Bialek & Jeff Mucha, SDG&E	Borrego Springs, CA		6 Guests	6	6
9	2016	24-Feb	New report reviews top US projects	Energy Storage Report		Only one of the three projects reviewed, the 1.6MW, 4.7MWh Borrego Springs Microgrid implemented by San Diego Gas & Electric (SDG&E), appears to have functioned satisfactorily from the outset.	http://energystoragereport.info/grid-scale-energy-storage-projects-usa/		
10	2016	24-Feb	US Energy Storage Projects and Prospects Guide 2016	Energy Storage Report		The guide focuses on the Borrego Springs, Tehachapiand, and Notrees energy storage projects and examines the long-term impact that they will have on the future project pipeline in the United States…	http://energystoragereport.info/grid-scale-energy-storage-projects-usa/#sthash.GMnU0UO0.dpuf		

#	Year	Date	Tech Transfer Product	Presented / Organized by:	Location	Description	Comments/Notes/URL	# of Est. People Reached	Tour Guests
11	2016	24-Feb	US Energy Storage Projects and Prospects Guide 2016	Energy Storage Report	Report pdf file	The guide focuses on the Borrego Springs, Tehachapi and, and Notrees energy storage projects and examines the long-term impact that they will have on the future project pipeline in the United States…	**Error! Hyperlink reference not valid.**		
12	2016	25-Feb	Energy Delivery Public Policy EAC Meeting - Hyatt Regency La Jolla	Neal Bartek, SDG&E	La Jolla, California		Over 25 Guests	25	
13	2016	3-Mar	Report: Mighty Microgrids	ILSR - Institute for Local Self-Reliance		Borrego Springs is a rural town of 2,800 people in southern California. Connected to the larger grid by a single, aging transmission line, Borrego Springs was a natural demonstration site for a microgrid.	https://ilsr.org/report-mighty-microgrids/		
14	2016	3-Mar	Report: Mighty Microgrids	ILSR - Institute for Local Self-Reliance		pdf file	https://ilsr.org/wp-content/uploads/downloads/2016/03/Report-Mighty-Microgrids-PDF-3_3_16.pdf		
15	2016	16-18 Mar	Microgrids Markets Summit East - Conference - Panel Presentation	Neal Bartek, SDG&E	Arlington, VA	Panel Discussion: Advanced Inverter Alternatives Available to Distribution Planners • Energy Storage • Grid-side Energy Efficiency and Demand Response • Customer demand management • Relationship of advanced inverters to storage and the grid	Over 100 Guests	100	
16	2016	22-Mar	Emerging Microgrid Business Models	POWER Magazine		In California, San Diego Gas & Electric (SDG&E) developed the Borrego Springs Microgrid project (see photo below) on its own initiative, ...	http://www.powermag.com/emerging-microgrid-business-models/		
17	2016	23-Mar	Borrego Springs Chamber Meeting - Microgrid Discussion	Neal Bartek, SDG&E	Borrego Springs, CA	Neal met with some of the Borrego Springs Chamber members and board to give an update on the project	Over 50 Guests	50	

#	Year	Date	Tech Transfer Product	Presented / Organized by:	Location	Description	Comments/Notes/URL	# of Est. People Reached	Tour Guests
18	2016	25-Mar	Borrego Springs Microgrid Tour - City of San Diego - Scott Chadwick and Team (Frank Urtasun)	Neal Bartek & Tom Bialek, SDG&E	Borrego Springs, CA		8 of Guests Total	8	8
19	2016	25-Mar	Borrego Springs Microgrid Tour - So Cal Edison and Pacific Gas & Electric Team	Neal Bartek & Tom Bialek, SDG&E	Borrego Springs, CA		11-So Cal Edison + 3-Pacific Gas & Electric	14	14
20	2016	30-Mar	What the Internet of Things Means for Local Governments	Public CEO		...home to more than 2.3 million smart electric meters, plus an advanced **microgrid** at **Borrego Springs**. And Walnut Creek is experimenting with ...	http://www.publicceo.com/2016/03/what-the-internet-of-things-means-for-local-governments/	-	-
21	2016	31-Mar	Utility Role in Microgrids - "Microgrids - the Next Big Thing"	Tom Bialek, Chief Engineer, SDG&E	La Jolla, California		Over +40 Guests	40	
22	2016	6-Apr	SDG&E Earth Day @ CP - DER Team Booth	SDG&E	SDG&E's Century Park Campus - San Diego, CA	Over +1,000 attendees at SDG&E's Century Park Campus - Discussed Borrego Springs Microgrid and other DER Team Projects	+1000 attendees to the Earth Fair	1000	
23	2016	18-Apr	Stationary Energy Storage Meeting - Panelist on BESSs Lessons Learned and Future Solutions	**Neal Bartek**	**La Jolla, California**	Neal is a "panelist at the Stationary Energy Storage meeting. Their topic is "BESSs Lessons Learned and Future Solutions" Primary audience will be battery R&D chemists and electrical engineers.	Over 50 Guests	50	
24	2016	22-Apr	Borrego Springs Microgrid - DER Team - Tour Guide Training	Neal Bartek, SDG&E	Borrego Springs, CA	Training DER Team members	9 Guests	9	9

#	Year	Date	Tech Transfer Product	Presented / Organized by:	Location	Description	Comments/Notes/URL	# of Est. People Reached	Tour Guests
25	2016	22-Apr	Borrego Springs Microgrid Tour - SDG&E Federal Regulatory & Compliance Team (Andrey Komissarov) and VP, Patrick Lee - Major Project Controls, Project Controls & Analysis	Neal Bartek, SDG&E	Borrego Springs, CA	Tour for internal SDG&E employees	8 Guests	8	8
26	2016	26-27 Apr	CEATI Conference - Intelligent Distribution Systems of the Future	Smart Grid Discussions on the Borrego Springs Microgrid conducted by Marvin Zavala-Iraheta and Steven Prsha	Atlanta, GA	The Centre for Energy Advancement through Technological Innovation (CEATI) is a user-driven organization committed to providing technology solutions to its electrical utility participants, who are brought together to collaborate and act jointly to advance the industry through the sharing and developing of practical and applicable knowledge.	70 Guests	70	
27	2016	27-Apr	Long live competition (Page 2)	Energy Biz		Maybe they can do it as part of their regulated business as SDG&E did with its Borrego Springs Microgrid project…	http://www.energybiz.com/article/16/04/long-live-competition-part-2		
28	2016	28-Apr	California Community Colleges- IOU ENERGY EFFICIENCY PARTNERSHIP - Campus Forum -	Neal Bartek, SDG&E	Oceanside, CA	Presentation given on SDG&E's Advanced Energy Storage projects (such as Borrego Springs, Canyon Crest, etc…)	Over +60 Guests	60	
29	2016	2-May	Overcoming Market Challenges to Microgrids -	AutomatedBuildings.com		They may have unusually high failure rates in their power supply. Borrego Springs is an example, a growing community at the end of a long single distribution line into the desert…	http://www.automatedbuildings.com/news/may16/columns/160429104808considine.html		
30	2016	3-May	2016 IEEE T&D Conference and Exposition	Tom Bialek, Chief Engineer, SDG&E	Dallas, TX	Presentation - "Forecasting & Mitigating Intermittent DER Impacts on Electric Distribution Systems" - Information on the Borrego Springs Microgrid included	Over 100 guests	100	

#	Year	Date	Tech Transfer Product	Presented / Organized by:	Location	Description	Comments/Notes/URL	# of Est. People Reached	Tour Guests
31	2016	4-May	EERE National Lab Impact Summit	EERE - Energy Efficiency & Renewable Energy	NREL Campus, Golden, CO	Neal Bartek served on breakout panel about "Energy Systems Integration" - Information on the Borrego Springs Microgrid included		75	
32	2016	20-May	SDG&E Green Careers Conference at the Energy Innovation Center	SDG&E and Strategic Energy Innovations (SEI)	SDG&E Energy Innovation Center - San Diego, CA	Daniel Spaizman, Engineer II discussed the Borrego Springs Microgrid and SDG&E's ability to island the entire town with the support of the NRG solar farm	High school students present about energy education projects, interact with industry professionals about green careers in renewables, energy efficiency, engineering, design and manufacturing, and more. Connect with environmental education institutions, non-profits, and future employers. 30 (Students, teachers & industry professionals)	30	
33	2016	2-Jun	KPBS - Interview & Tour at the Borrego Springs Microgrid Yard	KPBS	Borrego Springs, CA	Neal Bartek, DER Manager was interviewed by KPBS at the Borrego Springs Microgrid yard about the project	News story is pending	3	3
34	2016	12-Jun	Forester Daily News - Energy Storage Systems in Microgrids	Forester Daily News	na	Jun 12, 2016 - The Borrego Springs Microgrid is perhaps the best-known microgrid in the energy industry, and it is being expanded.	http://foresternetwork.com/weekly/energy-storage-solutions-weekly/energy-storage-systems-in-microgrids/		
35	2016	24-Jun	SDG&E's IT Tech Expo 2016 - Distributed Energy - Connecting Renewables to the Grid	Neal Bartek & Tom Bialek, SDG&E	SDG&E Energy Innovation Center, San Diego, CA	Discuss specific DER innovations/projects that are being managed to compensate for the changing industry environment - Includes Borrego Springs Microgrid information and video		175	
36	2016	29-Jun	CPUC Public Workshop on DRP Demonstration Projects - San Francisco, CA -	Neal Bartek	San Francisco, CA	Neal Bartek - Speaker - Describe SDG&E's planned demonstration projects and coordinate with other IOUs/stakeholders		50	

#	Year	Date	Tech Transfer Product	Presented / Organized by:	Location	Description	Comments/Notes/URL	# of Est. People Reached	Tour Guests
37	2016	Misc.	Borrego Springs Microgrid Project (Posting Date is Unknown)	Green Energy Corp	na	green energy corp has a website page dedicated to the Borrego Springs Microgrid Project	http://www.greenenergycorp.com/borrego-springs-microgrid-project/		
38	2016	1-Aug	Borrego Springs Microgrid Tour for Sumitomo Team	Neal Bartek & Tom Bialek	Borrego Springs, CA	SDG&E is working with Sumitomo on an AES project		12	12
39	2016	4-Aug	KPBS - ARTICLE: San Diego Leads Way in Reshaping Nation's Power Grid by Eric Anderson	Neal Bartek & Hanan Eisenman	Borrego Springs, CA	Borrego Springs sprawls across a mostly flat desert valley about 80 miles east of San Diego.	KPBS Website Article - http://www.kpbs.org/news/2016/aug/04/san-diego-leads-way-reshaping-nations-power-grid/		
40	2016	4-Aug	KPBS - VIDEO: San Diego Leads Way in Reshaping Nation's Power Grid by Eric Anderson	Neal Bartek & Hanan Eisenman	Borrego Springs, CA	Borrego Springs sprawls across a mostly flat desert valley about 80 miles east of San Diego.	KPBS Website Article - http://www.kpbs.org/news/2016/aug/04/san-diego-leads-way-reshaping-nations-power-grid/		
41	2016	4-Aug	KPBS - Radio News PT 1: San Diego Leads Way in Reshaping Nation's Power Grid by Eric Anderson	Neal Bartek & Hanan Eisenman	KPBS - San Diego	Borrego Springs, a small desert community about 80 miles east of San Diego, is shining a light on a future that could completely change how power is delivered to homes and businesses.	KPBS Radio News - http://www.kpbs.org/news/2016/aug/04/san-diego-leads-way-reshaping-nations-power-grid/		
42	2016	4-Aug	KPBS - Radio Midday News: San Diego Leads Way in Reshaping Nation's Power Grid by Eric Anderson	Neal Bartek & Hanan Eisenman	KPBS - San Diego	San Diego Leads Way in Reshaping Nation's Power Grid	KPBS Midday Edition - http://www.kpbs.org/news/2016/aug/04/san-diego-leads-way-reshaping-nations-power-grid/		
43	2016	5-Aug	KPBS - Radio News PT 2: San Diego Leads Way in Reshaping Nation's Power Grid by Eric Anderson	Neal Bartek & Hanan Eisenman	KPBS - San Diego	Borrego Springs, a small desert community about 80 miles east of San Diego, is shining a light on a future that could completely change how power is delivered to homes and businesses.	KPBS Radio News - http://www.kpbs.org/news/2016/aug/04/san-diego-leads-way-reshaping-nations-power-grid/		

#	Year	Date	Tech Transfer Product	Presented / Organized by:	Location	Description	Comments/Notes/URL	# of Est. People Reached	Tour Guests
44	2016	9-Aug	WNYC - Rural Towns Create Sustainable Energy, Digital Sanctuaries (12-minute audio file & article)	WNYC.org	WNYC.org	Through community cooperatives and microgrids, small towns are ... local lights on in Borrego Springs while the power lines were repaired. KPBS Reporter Erik Anderson explains how this remote town created a ...	http://www.wnyc.org/story/creating-sustainable-energy-island/		
45	2016	30-Aug	TAC Meeting - CEC EPIC - 14-060	Tom Bialek, Chief Engineer, SDG&E&Tisha SmithProject Mgr	Via Webex	**Agenda for the TAC Meeting:**1) Review historical Borrego Microgrid activities2) Review scope of CEC project aka Borrego 2.03) Update on progress4) Update on issues5) Review islanding events6) Review key lessons learnedPresented via webex	PowerPoint Slide Deck - 8 Total - TAC Members and SDG&E Team	8	
46	2016	6-Sep	CEC Staff Workshop on Microgrids	Tom Bialek, Chief Engineer, SDG&E	Sacramento, CA	Enhance the Borrego Springs Microgrid to be more flexible and automated in responding to a variety of potential outage situations, and leverage various new technologies and Distributed Energy Resources for increased Microgrid capabilities.	http://www.energy.ca.gov/research/epic/documents/2016-09-06_workshop/presentations/06%20SDG&E-Borrego%20Springs.pdf	50	
47	2016	3-Oct	Singapore Power Team - Meeting to discuss the Borrego Springs Microgrid	Laurence Abcede, SDG&E DER Manager & Tisha Smith BSM Project Mgr	SDG&E Lightwave Office, San Diego, CA		5 SDG&E Team members and 8 Singapore Power Team Members. PowerPoint Slide Deck	13	
48	2016	22-23-Oct	2016 Borrego Days Community Event	Laurence Abcede, Tisha Smith & Frank Goodman SDG&E	Borrego Springs, CA	Borrego Days is an annual community event that spans 3 days with food, entertainment, booths and events. SDG&E has a booth and talks to the community about the local microgrid project	DER Team provided a Microgrid Spokesperson to share progress and info on the Microgrid with the community	45,000	
49	2016	22-Oct	Borrego Springs Microgrid Fact Sheet - Community (2-page Flyer)	SDG&E Communications & DER Team	n/a	Fact Sheet about the Borrego Springs Microgrid - High-level for the Community			
50	2016	1-Nov	Seeker: Cities Are Building Disaster-Proof Green Microgrids	Seeker.com					

#	Year	Date	Tech Transfer Product	Presented / Organized by:	Location	Description	Comments/Notes/URL	# of Est. People Reached	Tour Guests
51	2016	2-Nov	Borrego Sun - "Borrego Microgrid in the News"	Borrego Sun Newspaper	n/a	Borrego's Microgrid hit the news recently with a piece by Eric Niiler for Seeker and interview with local resident Sylvana Meeks			
52	2016	4-Nov	DER Team Building & Borrego Springs Microgrid Tour	Laurence Abcede, SDG&E DER Manager & Tisha Smith BSM Project Mgr	Borrego Springs, CA	SDG&E's DER Team building event. Update the team on the latest upgrades to the microgrid yard		16	16
53	2016	17-Nov	Borrego Springs Microgrid Tour - PA Consulting	Laurence Abcede, SDG&E DER Manager & Tisha Smith BSM Project Mgr	Borrego Springs, CA	The Reliability Delegates from PA Consulting took a tour of the Borrego Springs Microgrid	Ulises Ochoa, Elect Anlys & Solutions Mgr, Techlgy Sols & Relibty - POC at SDG&E and organized tour with PA Consultant	50	50
54	2016	1-Dec	Borrego Springs Microgrid Tour & Safety Evaluation/Assessment	Laurence Abcede, SDG&E DER Manager & Tisha Smith BSM Project Mgr	Borrego Springs, CA	Tour and Safety Evaluation/Assessment by various key members of our DER Emergency Planning Team - Field Safety Advisor, Fire, Environmental, Engineers - feedback and guidance on signage, etc…		10	10
55	2016	19-Dec	Borrego Springs Microgrid Branding & Community Emergency Signs Installed	Tisha Smith BSM Project Mgr	Borrego Springs, CA	IAS Signs Installed 1 Branding Sign on the Command Center and 3 Community Emergency Signs at the 3 entrances to the microgrid yard			
56	2016	19-Dec	Borrego Springs Microgrid Tour for new interim SDG&E Public Affairs Manager, Addie Woodard	Tisha SmithBSM Project Mgr	Borrego Springs, CA		Addie Woodard toured the microgrid yard, learned more about our project and we also facilitated a meeting with Linda Haddock, Executive Director from the Borrego Springs Chamber of Commerce.	7	7

#	Year	Date	Tech Transfer Product	Presented / Organized by:	Location	Description	Comments/Notes/URL	# of Est. People Reached	Tour Guests
57	2016	21-Dec	INSIDE ENERGY: Microgrids Power Desert Community and Urban Campus (Includes 2 audio interviews)	Inside Energy		Borrego Springs sprawls across a mostly flat desert valley about 80 miles east of San Diego. When the afternoon wind blows in the summer it feels like …	http://insideenergy.org/2016/12/21/microgrids-power-desert-community-and-urban-campus/#		
58	2016	21-Dec	INSIDE ENERGY - Erik Anderson Author Post - Microgrids Power Desert Community and Urban Campus (Includes 2 audio interviews)	Inside Energy		Author Post - Erik Anderson - Borrego Springs sprawls across a mostly flat desert valley about 80 miles east of San Diego. When the afternoon wind blows in the summer it feels like …	http://insideenergy.org/author/erik-anderson-kpbs/		
59	2016	21-Dec	Wyoming PBS Facebook - Microgrids Power Desert Community and Urban Campus	Wyoming PBS		Borrego Springs sprawls across a mostly flat desert valley about 80 miles east of San Diego. When the afternoon wind blows in the summer it feels like …	https://www.facebook.com/WyomingPBS/		
60	2016	22-Dec	Video Shoot - Production for a 3-minute Borrego Springs Microgrid Video that will be presented at the Sempra Shareholders Meeting - Aerial shots, installation of the Ultracapacitor, interviews and b-roll footage. All b-roll footage and BSM video will be on a hard drive for our use. Ultracap was installed - Tisha has photos of that as well	Maria McGregor - Comms Mgr, Corporate Communications	Borrego Springs, CA	Maria McGregor is coordinating the video production of a 3-minute video about the Borrego Springs Microgrid Project for a Sempra Shareholders meeting. Included interviews with SDG&E Engineer, Daniel Spaizman and Borrego Springs Chamber of Commerce, Executive Director - Linda Haddock. A drone also took aerial shots of the microgrid yard		10	
61	2016	19-20 Dec	PRE-TEST - GENERATORS - Hawthorne	Tisha SmithBSM Project Mgr	Borrego Springs, CA	Run generators as a pre-test for the SDAPCD testing which will be conducted on 12/21-22		8	

#	Year	Date	Tech Transfer Product	Presented / Organized by:	Location	Description	Comments/Notes/URL	# of Est. People Reached	Tour Guests
62	2016	21-22 - Dec	SOURCE TEST for PERMITS: San Diego Air Pollution Control (Coordinated with SDG&E's Brian Yim)	SDG&E Tisha Smith BSM Project Mgr & Daniel Spaizman Engineer	Borrego Springs, CA	San Diego Air Pollution Control District (SDAPCD) conducts all-day testing on Dec 21st and Dec 22nd. The Source Test is an annual emissions test conducted on the two generators to demonstrate compliance with the emission limits.		8	
63	2016	25-Dec	Borrego Springs Microgrid: From Proof of Concept to Project Development Showcase - Andrew Burger	Microgridmedia.com		Backed by a power purchase agreement with San Diego Gas & Electric (SDG&E), NRG Energy commissioned the first utility-scale solar energy facility at the edge of town in 2013.	http://microgridmedia.com/borrego-springs-microgrid-proof-concept-project-development-showcase/		
							Tech Transfer Summary 2016	47,267	165

2017									
1	2017	16-Jan	INTERVIEWS Scheduled for the Sempra Shareholders Meeting video about the Borrego Springs Microgrid	Maria McGregor - Comms Mgr, Corporate Communications	Borrego Springs, CA	Maria McGregor is coordinating the video production of a 3-minute video about the Borrego Springs Microgrid Project for a Sempra Shareholders meeting. Included interviews with SDG&E Engineer, Daniel Spaizman and Borrego Springs Chamber of Commerce, Executive Director - Linda Haddock. A drone also took aerial shots of the microgrid yard		10	
2	2017	19-Jan	Borrego Springs Microgrid Discussion with	Tj Kirk, NRECA - National Rural Electric Cooperatives Association	San Diego, CA	PEER TO PEER DISCUSSIONS – NRECA's group is comprised of Project Managers who would not only like a tour of SDG&E's AES sites but would also like the opportunity to have candid discussions with our DER Team about the various projects we are working on.	Discussion took place at SDG&E's Advanced Energy Storage yard at Canyon Crest Academy	15	

#	Year	Date	Tech Transfer Product	Presented / Organized by:	Location	Description	Comments/Notes/URL	# of Est. People Reached	Tour Guests
3	2017	30-Jan	UU 101: DMS Solutions for Modern Distribution SystemsMonday, January 30, 2017: 8:00 AM - 5:00 PM*Tom Bialek represented SDG&E on a DistribuTECH Panel	DistribuTECH Conference & Exhibition	San Diego, CA	The course will provide information needed for electric utilities to plan, integrate and commission modern distribution systems. The course will feature presentations by representatives of Duke Energy and San Diego Gas & Electric, which have recently deployed DMS. These speakers will describe their implementation experiences, major challenges and solutions, and implementation lessons learned. Time will be allotted during each electric utility presentation to allow for Q&A between the electric utility speakers and attendees.	http://events.pennwell.com/DTECH2017/Public/SessionDetails.aspx?FromPage=Speakers.aspx&SessionID=16569&nav=true&Role=U%27	40	
4	2017	31-Jan	Keynote Session - DistribuTECHTuesday, January 31, 2017: 9:00 AM - 11:00 AM*Scott Drury, incoming President, represented SDG&E on a DistribuTECH Panel and mentioned the BSM	DistribuTECH Conference & Exhibition		The DistribuTECH 2017 keynote session will continue the tradition of featuring highly-respected industry experts who will share their views on the challenges and opportunities utilities face. You'll hear what these experts believe utilities must do to not just survive, but thrive now and in the future. They will share their thoughts about the digital transformation that is redefining utilities and their customers.	http://events.pennwell.com/DTECH2017/Public/SessionDetails.aspx?FromPage=Sessions.aspx&SessionID=17465&SessionDateID=498#	5000	
5	2017	31-Jan	Customer-owned Microgrids: Ignore Them? Fight Them? Partner with Them? T Tuesday, January 31, 2017: 3:00 PM - 4:30 PM* Tom Bialek represented SDG&E on a DistribuTECH Panel	DistribuTECH Conference & Exhibition	San Diego, CA		http://events.pennwell.com/DTECH2017/Public/SessionDetails.aspx?FromPage=Speakers.aspx&SessionID=16783&nav=true&Role=U%27	150	
6	2017	1-Feb	Planning for a Modern Grid: Lessons from California and New YorkWednesday, February 01, 2017: 10:00 AM - 11:30 AM*Tom Bialek represented SDG&E on a DistribuTECH Panel	DistribuTECH Conference & Exhibition	San Diego, CA	Grid modernization has become the leading topic of discussion in the utility industry. This panel of experts will explore the early pilots of New York's Reforming the Energy Vision (REV) and California's Distribution Resource Plans (DRP). Panelists will discuss grid modernization and how new technologies including DER, storage, EV charging and DSM programs are being applied.	http://events.pennwell.com/DTECH2017/Public/SessionDetails.aspx?FromPage=Speakers.aspx&SessionID=16693&nav=true&Role=U%27	300	

#	Year	Date	Tech Transfer Product	Presented / Organized by:	Location	Description	Comments/Notes/URL	# of Est. People Reached	Tour Guests
7	2017	7-Feb	Microgrids on the March: Utilities Are Building Out New Business Models to Make Islanding Work	Greentech Media	DistribuTECH Conference - San Diego, CA	San Diego Gas & Electric delivers power to the town of Borrego Springs via a single radial transmission line running through the desert. Lightning strikes and desert flash floods threaten that line, resulting in historically poor reliability, Chief Engineer Thomas Bialek explained at the DistribuTECH panel.	https://www.greentechmedia.com/articles/read/DistribuTECH-roundup-microgrids-on-the-march		
8	2017	8-Feb	5th Annual - Energy Career Connections & Leadership Conference	ABDNHA - Betsy Knaak	Jacobs Center - San Diego, CA	165 Students, 60 Mentors attended event - Borrego Springs Microgrid was mentioned during the How Energy Works presentation given by Gabe Leggett. Borrego Springs High School was in attendance as well as 5 other Title 1 High Schools. DER Team also had a booth at the career fair and discussed the BSM project		225	
9	2017	27-Feb	Borrego Springs Microgrid Tour - The Electric Cooperatives of South Carolina, Inc.	Tisha SmithBSM Project Mgr	Borrego Springs, CA	Tour for the Electric Cooperatives of South Carolina, Inc.	Tour Group Objectives: This field trip is about seeing what a successful microgrid looks like. The cooperatives of South Carolina serve 70% of the geography of the state and a third of the population. There are areas we serve that we cannot get transmission lines permitted - a microgrid could help alleviate significant reliability issues. Seeing a microgrid such as yours helps us answer viability questions, and can encourage us to pursue non-traditional solutions.	4	4
10	2017	24-Mar	Borrego Springs Tour - SPAWAR & SDSU / UCSD / SDG&E / So Cal Edison	Tisha SmithBSM Project Mgr&Daniel SpaizmanEngineer II	Borrego Springs, CA	5 Groups take a tour of the microgrid because they are all considering microgrids for their facilities/companies		20	20
11	2017	10-Apr	The Value of Energy Storage in Microgrids	Microgrid Knowledge		San Diego Gas and Electric installed a microgrid in Borrego Springs, CA to help with solar smoothing and energy shifting, and it has the capabilities to fully support its community during a power outage.	http://microgridknowledge.com/value-energy-storage-microgrids/		

#	Year	Date	Tech Transfer Product	Presented / Organized by:	Location	Description	Comments/Notes/URL	# of Est. People Reached	Tour Guests
12	2017	20-Apr	SDG&E Earth Fair - Borrego Springs Microgrid	DER Team	SDG&E Century Park Campus	DER Team booth at SDG&E's Earth Fair's Innovation Corridor to discuss green technologies. Featured information about the Borrego Springs Microgrid & DERMS in all presentations to event guests.		400	
13	2017	12-May	Sempra Energy Annual Shareholders Meeting - Borrego Springs Microgrid video shown	Maria McGregor - Comms Mgr, Corporate Communications	San Diego, CA	Short video shown during the Sempra Shareholders meeting	Annual Shareholders Meeting on May 12, 2017, at the Island Hotel in Newport Beach, California. They delivered reports/presentations on their financial and operational targets.		
14	2017	16-May	Borrego Springs Microgrid - Aerial Shots by Drone	Christine Asaro, SDG&E Aviation Services	Borrego Springs, CA	Christine Asaro took aerial photos and video of the Borrego Springs Microgrid yard.	Loaded up on the Distributed Energy Resources Z: Drive		
15	2017	16-May	Borrego Springs Microgrid - Video - Verite Production Studios	Maria McGregor - Comms Mgr, Corporate Communications	San Diego, CA	Maria McGregor is coordinating the video production of a 3-minute video about the Borrego Springs Microgrid Project for a Sempra Shareholders meeting. This is the B-Roll Footage on the Ultracap installation	Loaded up on the Distributed Energy Resources Z: Drive		
16	2017	21-Jun	DER Lunch & Learn - Borrego Springs Microgrid Project	Tisha SmithBSM Project Mgr&Daniel SpaizmanEngineer II	SDG&E CP East Auditorium	Update on the Borrego Springs Microgrid Project 2.0 phase.	1 hour presentation with PPT - photos taken of attendees - guests attended in person and via Skype	80	
17	2017	29-Jun	The Economist Magazine - Borrego Springs Microgrid Tour and interview with Caroline Winn, SDG&E's Chief Operating Officer	Colleen Windsor, SDG&E Communications	Borrego Springs, CA	A reporter from the Economist Magazine interviewed Caroline Winn and taking a tour of the Borrego Springs Microgrid.		5	5

#	Year	Date	Tech Transfer Product	Presented / Organized by:	Location	Description	Comments/Notes/URL	# of Est. People Reached	Tour Guests
18	2017	30-Jun	Borrego Springs Microgrid - Interviews with DER Team - Video Shoot - Verite Production Studios	Maria McGregor - Comms Mgr, Corporate Communications	San Diego, CA	Interviews with Tom Bialek, Daniel Spaizman, Gabe Leggett and Laurence Abcede			
19	2017	13-Jul	TOUR - Borrego Sun Newspaper - Suzanne Howarth - Guest Editor	Laurence Abcede, DER Manager & Helen Gao, Communications	Borrego Springs, CA	Updating the Borrego Sun on the progress of the Borrego Springs Microgrid with Tour	New SDG&E Public Affairs Manager, Joseph Gabaldon also attended	5	5
20	2017	18-Jul	2017 IEEE PES General Meeting - Super Session on Energy Storage by Frank Goodman, SDG&E	Frank Goodman, SDG&E Team Lead - EPIC Projects	Chicago, IL	Frank Goodman was part of a panel and did a 30-minute presentation on energy storage. One of the main projects featured was the Borrego Springs Microgrid along with a short video clip of the microgrid yard. Copy of slide deck available online for all participants	The IEEE Power & Energy Society (PES)held its 2017 General Meeting in Chicago, IL USA. The technical program theme of "Energizing a More Secure, Resilient & Adaptable Grid" will provide a platform to offer new insights, innovative ideas and answers to some of the most intriguing and important questions facing the power industry today	50	
21	2017	26-Jul	Debating the future of energy	Idaho Mountain Express and Guide	Idaho	She said that the city of Borrego Springs, Calif., which is east of San Diego, has ... Myers said the microgrid offers a dependable alternative solution.	http://www.mtexpress.com/news/blaine_county/debating-the-future-of-energy/article_503484f0-7192-11e7-877c-6fa5693f8483.html		
22	2017	27-Jul	Dr. Arni McKinley and Kevin McKinley - 7/27 - MEETING & 7/28 TOUR with interns	Tisha Smith, Project Mgr	San Diego, CA	Meeting to discuss the Borrego Springs Microgrid	Dr. McKinley is from the University College London in the Electronic & Electrical Engineering department - he is participating in a study in South Australia this summer - Goal - looking at the design and development of residential and commercial microgrids. Kevin McKinley used to work at SDG&E	4	

#	Year	Date	Tech Transfer Product	Presented / Organized by:	Location	Description	Comments/Notes/URL	# of Est. People Reached	Tour Guests
23	2017	28-Jul	SDG&E Summer Interns - Borrego Springs Microgrid Tour	Connie Liu, Engineer	Borrego Springs, CA	Interns from various departments will tour the Borrego Springs Microgrid - DERMS demonstration as well as a site tour given		37	37
24	2017	28-Jul	Dr. Arni McKinley and Kevin McKinley - 7/27 - MEETING & 7/28 TOUR with interns	Tisha Smith, Project Mgr	Borrego Springs, CA	Tour the Borrego Springs Microgrid with DERMS demonstration	Dr. McKinley is from the University College London in the Electronic & Electrical Engineering department - he is participating in a study in South Australia this summer - Goal - looking at the design and development of residential and commercial microgrids. Kevin McKinley used to work at SDG&E	2	2
25	2017	28-Jul	James Dodenhoff - Regional Director of Business Development-Western U.S. IPERC	Tisha Smith, Project Mgr	Borrego Springs, CA	Tour the Borrego Springs Microgrid with DERMS demonstration	IPERC was founded with the central mission of advancing the power of energy to provide a more intelligent and efficient control system capable of reducing costs, enhancing security and providing continuous power when failure is not an option.	5	5
26	2017	9-Aug	A Small-Scale Power Solution Could Pay Big Dividends Across the U.S.	Time.com		Microgrids used as a way to deliver power to the 2,800 residents of Borrego Springs, Calif - (mention)	http://time.com/4894986/small-scale-power-solution-pay-big-dividends-across-us/		
27	2017	21-Aug	California Awarding $45 Million for Microgrids	RTO Insider - (Subscription Service)		California is offering $45 million in grants for the development of microgrids on a variety of siting categories to stimulate development of new distributed energy resources	https://www.rtoinsider.com/california-microgrids-distributed-energy-resources-47923/		

#	Year	Date	Tech Transfer Product	Presented / Organized by:	Location	Description	Comments/Notes/URL	# of Est. People Reached	Tour Guests
28	2017	24-Aug	SDG&E COO Highlights Power of Energy Storage Innovation	sdgenews.com		... proud of is our microgrid, located in the town of Borrego Springs about 90 miles from here. It leverages solar energy, storage, and …	http://sdgenews.com/clean-innovative/sdge-coo-highlights-power-energy-storage-innovation		
29	2017	24-Aug	Microgrid and Big Problems	Borrego Sun Newspaper	Borrego Springs, CA	Borrego's microgrid is being classed as a leading light in waging the war on developing sustainable electricity for homeowners…	-		
30	2017	5-Sep	Microgrids: Small But Mighty	sdgenews.com		Over the past decade, SDG&E has been continually perfecting one of the first large, utility-scale microgrids in the United States – the Borrego Springs Microgrid	http://sdgenews.com/reliable/microgrids-small-mighty		
31	2017	15-Sep	California Energy Markets - Top 10 California Microgrids Listing	California Energy Markets - Energy News Data Corporation		Microgrids are becoming widespread in California,with military bases, ports, tribes, disadvantagedcommunities, rural areas, industrial complexes anduniversities and schools eyeing the technology forgeneration, redundancy and reliability.	Subscription energy news service		
32	2017	Sept	Case Study: Borrego Springs Microgrid	Governor's Office of Planning and Research		Adaptation-oriented case studies for the Governor's Office of Planning and Research - SDG&E Chief Engineer Tom Bialek worked with GOPR on this paper			
33	2017	3-Oct	California Microgrid Program Advances	RTO Insider		The PUC's "Distributed Resources Plans" proceeding has authorized development of two microgrids: one in Borrego Springs, in San Diego Gas & Electric territory, and another in Mono County, in Southern California Edison's area.	https://www.rtoinsider.com/california-microgrids-76595/		
34	2017	3-Oct	Borrego Springs Microgrid Tour & Interview by Michael Sadler, Borrego Sun	Borrego Sun Newspaper	Borrego Springs, CA	Michael is putting together some FAQ's about the Borrego Springs Microgrid as well as taking a tour, writing an article - wait for his write-up	Laurence Abcede, DER Manager, Gabe Leggett, DER Engineer and Helen Gao, Communications Manager gave the tour	4	4

#	Year	Date	Tech Transfer Product	Presented / Organized by:	Location	Description	Comments/Notes/URL	# of Est. People Reached	Tour Guests
35	2017	19-Oct	Borrego Springs Microgrid FAQ's - by Michael Sadler	Borrego Sun Newspaper	Borrego Springs, CA	1 page of FAQ's about the Borrego Springs Microgrid			
36	2017	19-Oct	Testing the Advanced Technologies of the Future	sdgenews.com		.. energy storage systems. Technology which enabled the Borrego Springs Microgrid was also tested and perfected at the lab before it was …	http://sdgenews.com/clean/testing-advanced-technologies-of-the-future		
37	2017	27-28-Oct	2017 Borrego Days Community Event	Tisha Smith, Donna Miyasako-Blanco, Joe Gabaldon SDG&E	Borrego Springs, CA	Borrego Days is an annual community event that spans 3 days with food, entertainment, booths and events. SDG&E has a booth and talks to the community about the local microgrid project	SDG&E Sponsored, DER Team had a double booth and shared it with ABDNHA, Borrego Desert Energy Center and the Friends of the Library. Recruited and conducted the DRP Borrego Springs Microgrid Survey	45,000	
38	2017	28-Oct	Borrego Springs Microgrid Awareness Survey	Donna Miyasako-Blanco, SDG&E	Borrego Springs, CA	Recruited and conducted a simple awareness survey about the Borrego Springs Microgrid with 49 total part-time and full-time residents in attendance to the Borrego Days event		49	
39	2017	15-Nov	DER Lunch & Learn - Borrego Springs Microgrid - Case Study - Island 2	Daniel Spaizman, Michelle Menvielle and Mehrdad Yazdanibiouki	SDG&E Century Park Campus	On the morning of October 4, the DER-Distributed Energy Resources and DERMS - Distributed Energy Resource Management Systems Teams conducted a successful event at the Borrego Microgrid to test "Island #2" and validate automation and system protection settings. These tests involved black start, islanding, and transition to the utility grid. The entire test was conducted and managed with the DERMS Wave controller. (Distributed Energy Resource Management System)			
40	2017	15-Nov	Borrego Springs Microgrid Video	Produced in-house for the DER L&L presentation	San Diego, CA	Aerial shots and Microgrid yard video & photos shown in a loop during the event			

#	Year	Date	Tech Transfer Product	Presented / Organized by:	Location	Description	Comments/Notes/URL	# of Est. People Reached	Tour Guests
41	2017	17-Nov	Borrego Springs Microgrid Video	Produced by Verite					
42	2017	4-Dec	Microgrids Keep These Cities Running When the Power Goes Out	Inside Climate News		Microgrids Keep These Cities Running When the Power Goes Out Inside Climate News It was put to the test in September 2013, when lightning and flooding knocked out the same critical transmission line that connects Borrego Springs with outside power…			
43	2017	20-Dec	TOUR - DER Lunch & Learn - Borrego Springs Microgrid Project	Daniel Spaizman, Michelle Menvielle and Mehrdad Yazdanibiouki	Borrego Springs, CA	25 Total Tour Participants		25	25
44	2017	*2017	Modernizing Our Grid and Energy System - ESIF 2017	NREL		37 Page Report - The Energy Systems Integration Facility (ESIF) is thenation's premier facility for the research, development,and demonstration of the integrated technologies andstrategies shaping our energy system.			
							Tech Transfer Summary 2017	51,430	107

2017									
1	2018	5-Jan	Borrego Springs' Claim to Energy Fame: A Microgrid That Enhances Reliability	sdgenews.com	Borrego Springs, CA	Most recently, Inside Climate News featured the Borrego Springs Microgrid in an article titled "Microgrids Keep These Cities Running When the Power Goes Out."	http://sdgenews.com/reliable/borrego-springs%E2%80%99-claim-energy-fame-microgrid-enhances-reliability		

#	Year	Date	Tech Transfer Product	Presented / Organized by:	Location	Description	Comments/Notes/URL	# of Est. People Reached	Tour Guests
2	2018	5-Feb	Microgrids: From Niche to $100 Billion Market by Fereidoon Sioshansi	theenergycollective.com		(SDG&E) project in Borrego Springs utility distribution microgrid. Others, however, have confronted regulatory skepticism and rejection, including Baltimore Gas & Electric Co.	http://www.theenergycollective.com/fereidoonsionshansi/2421442/microgrids-niche-100-billion-market		
3	2018	13-Feb	Modern Marvel: The Brains Behind Reliable Renewable Energy	sdgenews.com		... largest utility microgrids. Built by SDG&E, the Borrego Springs Microgrid can independently provide power to the remote desert ... near future.	http://sdgenews.com/reliable/modern-marvel-brains-behind-reliable-renewable-energy		
4	2018	1-Mar	ABDNHA - Borrego Desert Energy Educational Project - Introduction Event & Project Launch	ABDNHA	Borrego Springs, CA	Introduction event to launch the Borrego Desert Energy Educational Project - BDEP includes community outreach into the city and schools to promote the impact of energy generation and use on the environment and to advocate efficient energy management to reduce carbon footprint	Photos were taken of the event	65	
5	2018	1-Mar	BSM Tour - Jamie Patterson, CEC	Alisha Stamps, SDG&E	Borrego Springs, CA	Tour of the BSM for CEC Senior Electrical Engineer and CEC EPIC-14-060 program manager, Jamie Patterson. Other guests included: SDG&E's Morgan Justice-Black, Alisha Stamps, Tom Bialek, Donna Miyasako-Blanco & the DER Team			10
6	2018	1-Mar	Energy and Nature: The Dynamic Duo at the Center of the Borrego Springs Energy Education Project	sdgenews.com	Borrego Springs, CA	Today, the Anza-Borrego Desert Natural History Association (ABDNHA), one of our long-time partners in environmental education, celebrated the completion of its new energy education project. We joined about 30 residents and community leaders to mark the occasion.	http://sdgenews.com/clean/energy-and-nature-dynamic-duo-center-borrego-springs-energy-education-project		
7	2018	1-Mar	ABDNHA - Borrego Desert Energy Center Website- Features information about the Borrego Springs Microgrid	Mike McElhatton - ABDNHA	Borrego Springs, CA	The Borrego Springs Microgrid is featured as a local sustainable project on the ABDNHA's BDEC website	http://www.abdnha.org/energycenter/SustainableBorrego/index.html		
8	2018	7-Mar	SDG&E President Highlights Leadership and Innovation	sdgenews.com		... generation to meet the unique needs of the community of Borrego Springs about 90 miles from here. And finally, one of our latest efforts …	http://sdgenews.com/clean-community-innovative-reliable-safe/sdge-president-highlights-leadership-and-innovation		

#	Year	Date	Tech Transfer Product	Presented / Organized by:	Location	Description	Comments/Notes/URL	# of Est. People Reached	Tour Guests
9	2018	9-Mar	ABDNHA Desert Energy Project	Borrego Sun Newspaper	Borrego Springs, CA	If there are Borregan's who doubt the possibility of members of non-profit organizations, government agencies, and the private sector all working together in harmonious synchronization towards a common public goal, they should have attended the kick-off meeting of our Desert Energy Project March 1, held at the Anza-Borrego Desert Natural History Association	http://www.borregosun.com/story/2018/03/01/news/abdnha-desert-energy-project/4267.html		
10	2018	19-Mar	Borrego Springs Microgrid Tour: Tom Roberts from ORA	Jose L. Cardenas, SDG&E	Borrego Springs, CA	Tom Roberts from the ORA visited the Borrego Springs Microgrid to see the progress of the work for the two budgets in the GRC .	Alan Colton and various members from SDG&E and the SDG&E DER Team accompanied Tom Roberts	9	9
11	2018	23-Mar	Borrego Springs Microgrid Awareness Survey	Donna Miyasako-Blanco, SDG&E	Borrego Springs, CA	Recruited 33 more survey participants at the local Borrego Springs Farmer's Market at Christmas Circle - Partnering with ABDNHA and the Dark Skies Local Volunteer Team		33	
12	2018	4-Apr	2018 SDG&E Earth Fair @ SDG&E's Century Park Campus	SDG&E Green Team	San Diego, CA	The DER Team had a booth at SDG&E's Earth Fair and discussed the Borrego Springs Microgrid and other DER projects to fair attendees. The theme was SDG&E's commitment to environmental sustainability.	http://powerup.sdge.com/departments/green/2018EarthFairRecap.cfm	400	
13	2018	8-Jun	CEC Team Tour of the Borrego Springs Microgrid	Laurence Abcede, DER Team	Borrego Springs, CA	The CEC is taking a tour of the Borrego Springs Microgrid to see how it is progressing. The CEC awarded nearly $5 million to SDG&E to expand the Microgrid to use the nearby 26-megawatt (MW) Borrego Solar facility to power the entire community,			
14	2018	26-Jun	Borrego Springs Microgrid Overview Presentation	Tom Bialek, Chief Engineer	Borrego Springs, CA	Tom Bialek gave a historic overview and progress update of the Borrego Springs Microgrid project to Japan's NEDO Team and Sumitomo Electric's Team.			12

#	Year	Date	Tech Transfer Product	Presented / Organized by:	Location	Description	Comments/Notes/URL	# of Est. People Reached	Tour Guests
15	2018	26-Jun	NEDO and Sumitomo Electric tour of the Borrego Springs Microgrid	Laurence Abcede, DER Team	Borrego Springs, CA	DER Team gives Japan's NEDO Team and Sumitomo Electric's Team a tour of the Microgrid yard			12
16	2018	13-Jul	Borrego Springs Microgrid Fact Sheet (Updated)	Donna Miyasako-Blanco, SDG&E		CEC needed an updated fact sheet on the Borrego Springs Microgrid that contained more technical specs			
							Tech Transfer Summary for April - July 2018	507	43

Tech Transfer Summary 2015	2,527	158
Tech Transfer Summary 2016	47,267	165
Tech Transfer Summary 2017	51,430	107
Tech Transfer Summary for April - July 2018	507	43

REPORT TO CITY COUNCIL

City of Nevada City
317 Broad Street
Nevada City, CA 95959
www.nevadacityca.gov

January 22, 2020

TITLE: Schematic of Parking Structure at Spring Street Parking Lot

RECOMMENDATION: Provide staff direction to proceed with design of a Parking Structure at Spring Street parking lot.

CONTACT: Bryan McAlister, City Engineer
Catrina Olson, City Manager

BACKGROUND/DISCUSSION:
On August 16, 2019, City Council directed City staff, as part of their six-month strategic objectives, to present to the City Council a rendering of a parking structure at Spring Street with potential funding options and a plan for including public workshops for input. The project is intended to supplement parking inventory as part of the City's efforts to address parking and traffic congestion.

City staff obtained topographic survey and mapping information for the City-owned property at Spring Street and developed a conceptual 3-D model of a parking structure. The structure would have two or three levels below grade 'daylighting' to the downgradient slope, and two-levels at Spring Street. City staff worked with a local architect, Bruce Boyd, to develop conceptual drawings of the structure, which includes the following elements:

Primary elements include:

- A new multi-level public parking garage, with two-levels above-ground at Spring Street and two or three-levels partially under-ground (below street level).
- Architecturally designed commercial building, facing Spring Street, with approximately 6,000 SF commercial space and three-tenants.
- Approximately 170-190 spaces, including 7-8 ADA accessible spaces, elevator, stairways and associated site improvements.
- Other proposed options are being considered include to incorporating bike parking, electric vehicle charging stations and solar panels.

Schematic plans are provided herein for City Council to review and make initial comments. Staff requests Councils direction to begin design for the parking structure with retail space. Design would include 1) Design Development and project oversight by Bruce E. Boyd, Architecture & Planning and 2) Specialized consultant services for Geotechnical investigation; preliminary Structural Design; Lighting and Electrical; and 3) Environmental Review. Public participation will be provided throughout the process including Parking Committee oversight, Planning Commission Review and approval, and City Council review and approval of the overall project as it relates to financing and procurement of design/build construction proposals.

ENVIRONMENTAL CONSIDERATIONS:
Site investigation and preliminary design work are not considered "Projects" pursuant to the California Environmental Quality Act (CEQA) Guidelines, Section 21065 because these activities do not commit the City to an activity that will cause a direct physical change in the environment or a reasonable foreseeable indirect change in the environment. Design proposals will be based on the information gathered as stated above. Once design proposals are received, Council will evaluate designs and determine the scope of the project. At that time, Council will direct staff to review the preferred design pursuant to CEQA.

FINANCIAL CONSIDERATIONS: Design development and consulting services to be funded by restricted General funds specific to future parking development. Financing for construction to be determined during design development.

ATTACHMENT:

- ✓ Exhibit A-1 Schematic plans for Spring Street Parking Structure

NEW PROJECT

#Site Address1
#Site City, #Site State #Site Postcode
APN: ####

VICINITY MAP

DRAWING A1

1/8/20

NEW PROJECT

#Site Address1
#Site City, #Site State #Site Postcode
APN: ####

SITE PLAN

DRAWING A2

1/8/20

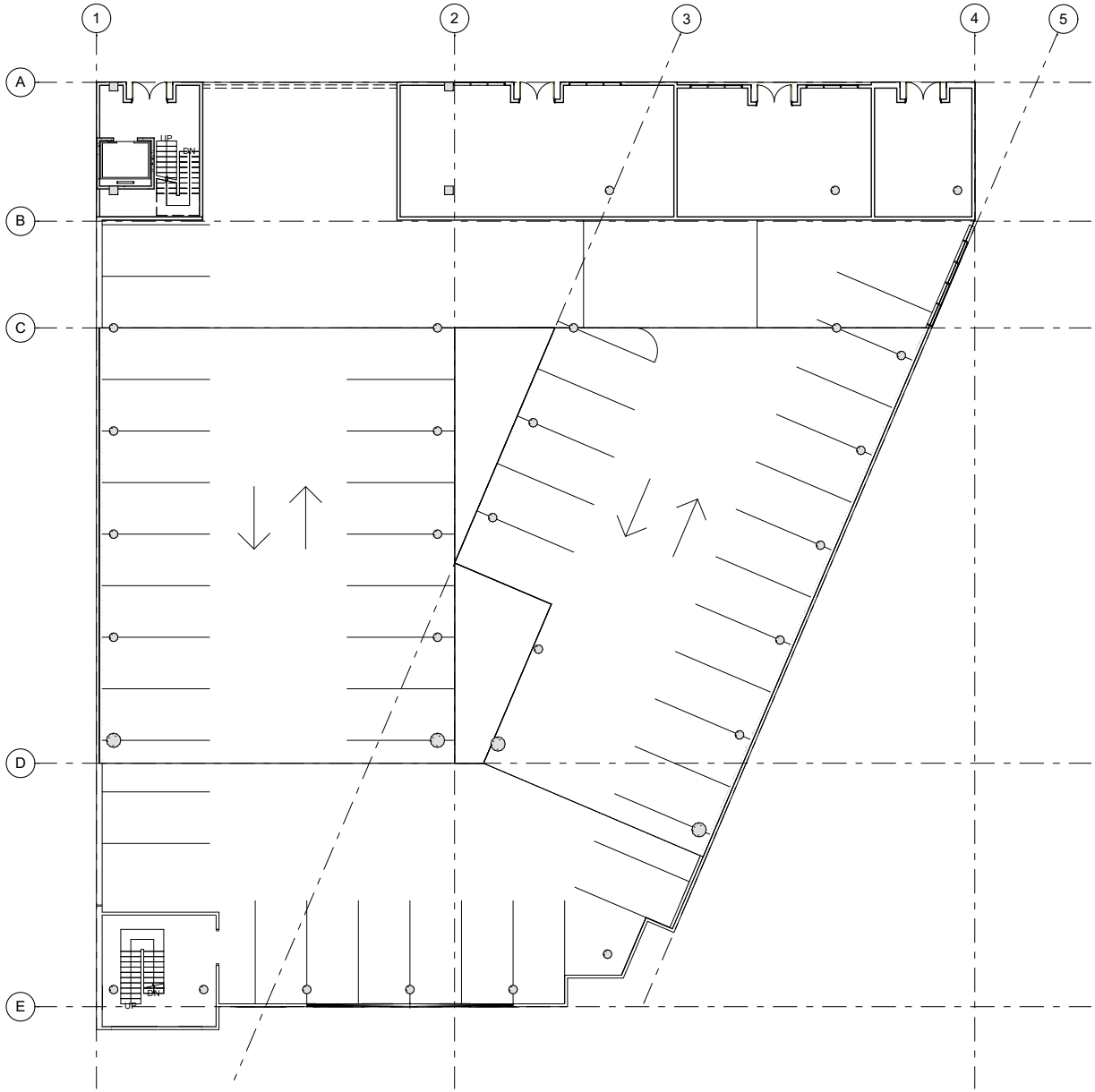

4 LEVEL 4

SCALE: 1" = 30'

NEW PROJECT

#Site Address1
#Site City, #Site State #Site Postcode
APN: ####

FLOOR PLAN - LEVEL 4
DRAWING A3

1/8/20

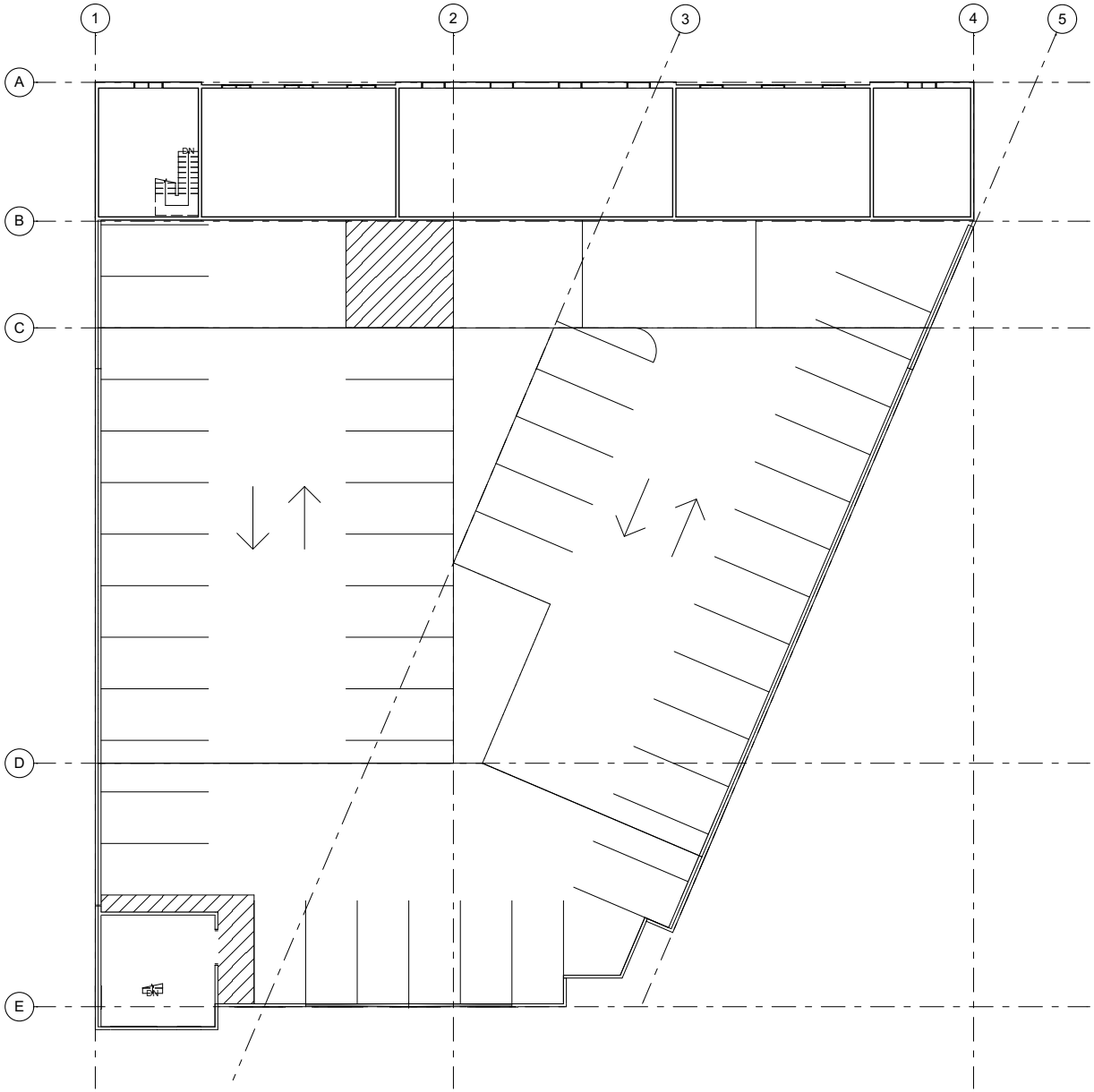

4 LEVEL 5

SCALE: 1" = 30'

NEW PROJECT

#Site Address1
#Site City, #Site State #Site Postcode
APN: ####

FLOOR PLAN - LEVEL 5
DRAWING A4

1/8/20

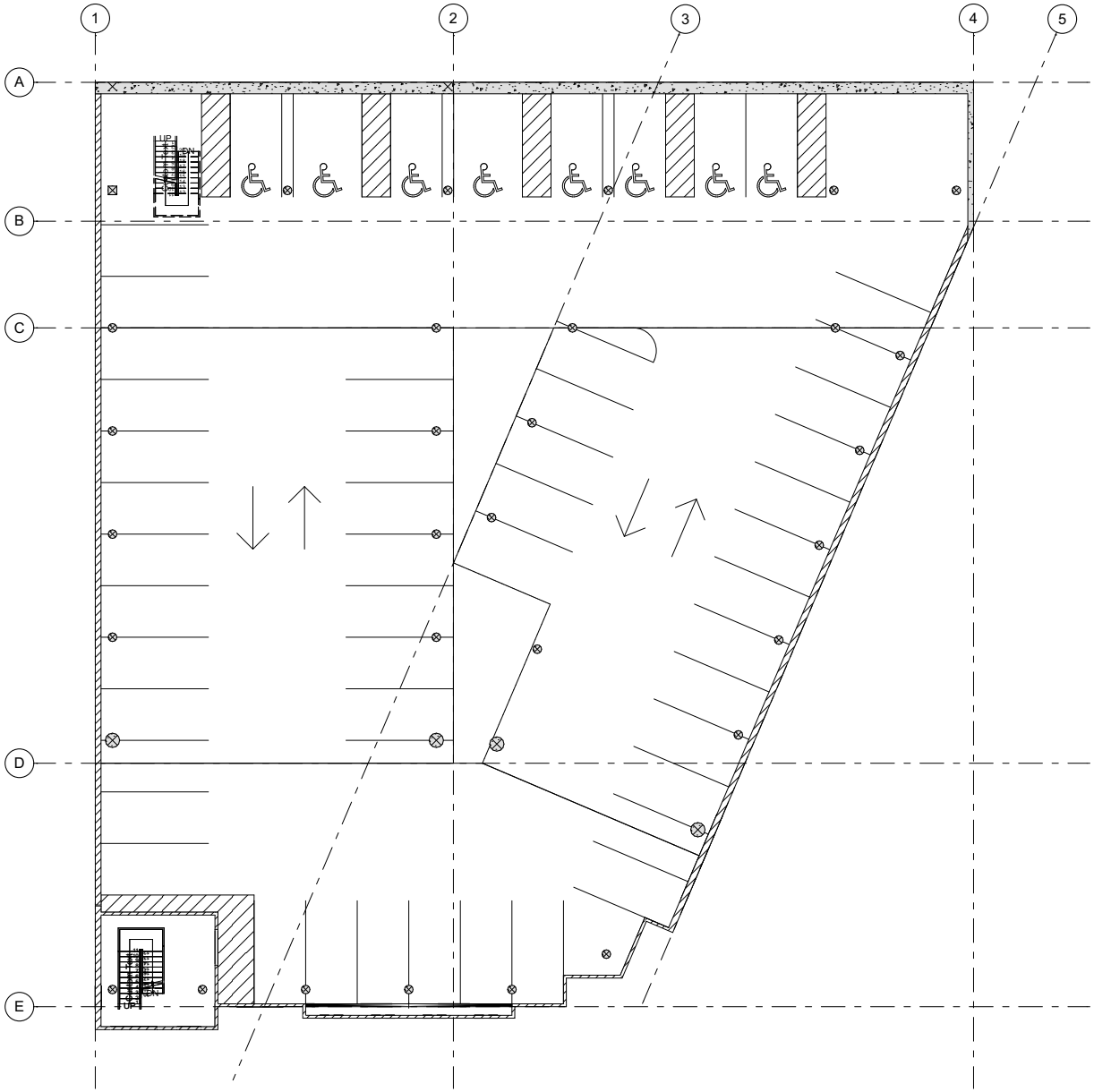

4 LEVEL 3

SCALE: 1" = 30'

NEW PROJECT

#Site Address1
#Site City, #Site State #Site Postcode
APN: ####

FLOOR PLAN - LEVEL 3
DRAWING A5

1/8/20

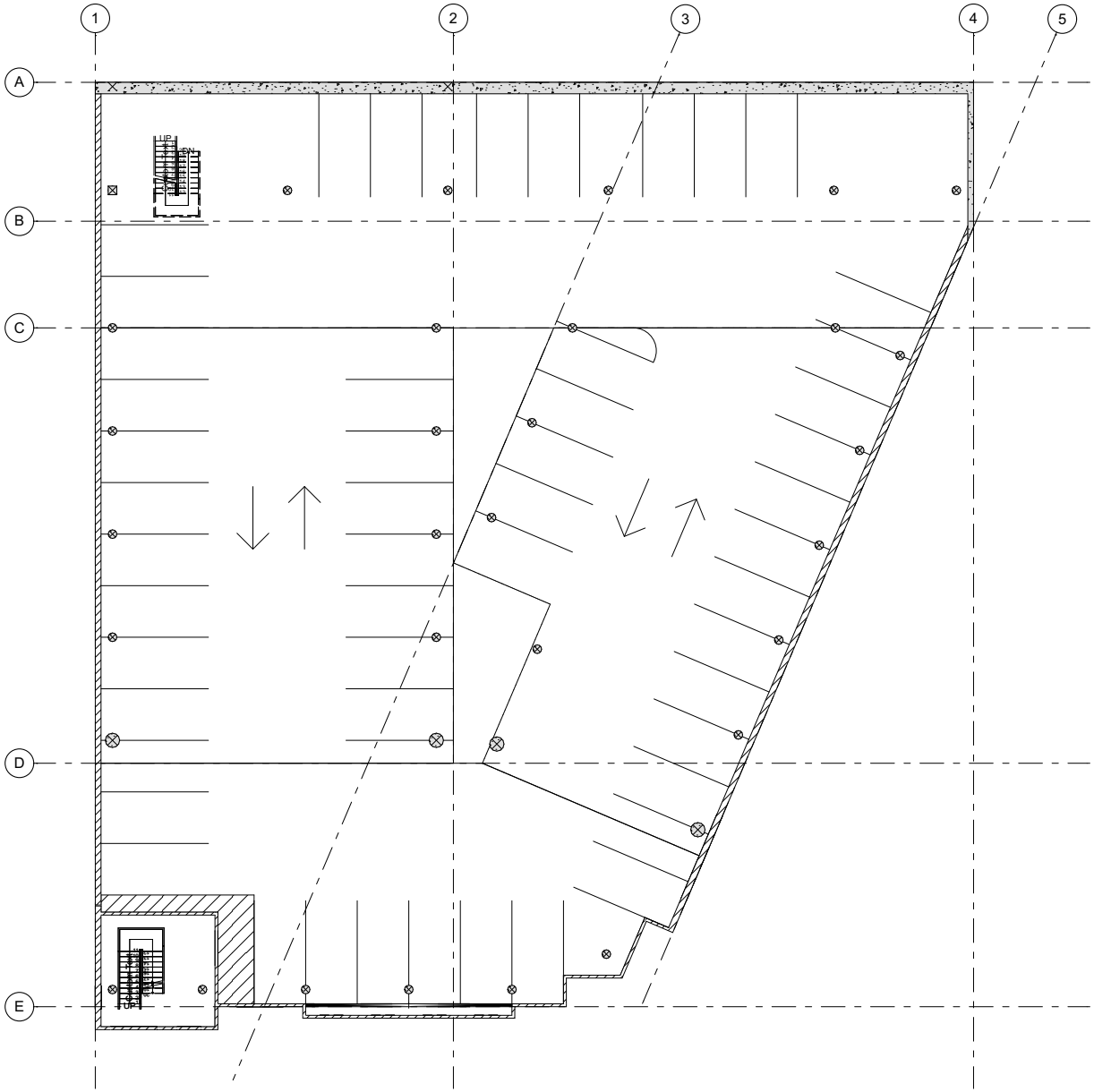

4 LEVEL 2

SCALE: 1" = 30'

NEW PROJECT

#Site Address1
#Site City, #Site State #Site Postcode
APN: ####

FLOOR PLAN - LEVEL 2

DRAWING A6

1/8/20

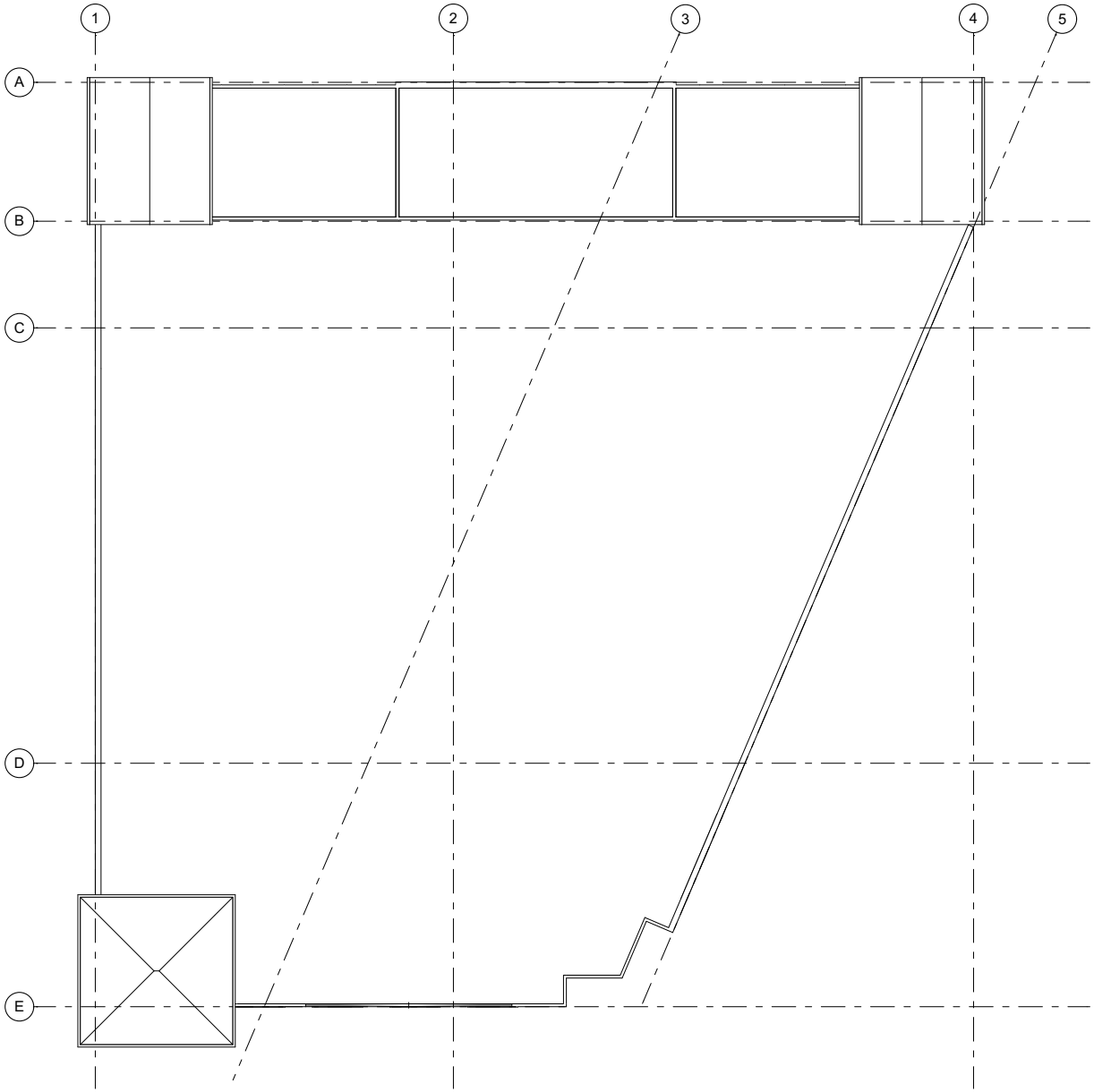

4

ROOF PLAN

SCALE: 1" = 30'

NEW PROJECT

#Site Address1
#Site City, #Site State #Site Postcode
APN: ####

ROOF PLAN

DRAWING A7

1/8/20

1 SOUTH ELEVATION
SCALE: 1/8" = 1'-0"

2 NORTH ELEVATION
SCALE: 1/8" = 1'-0"

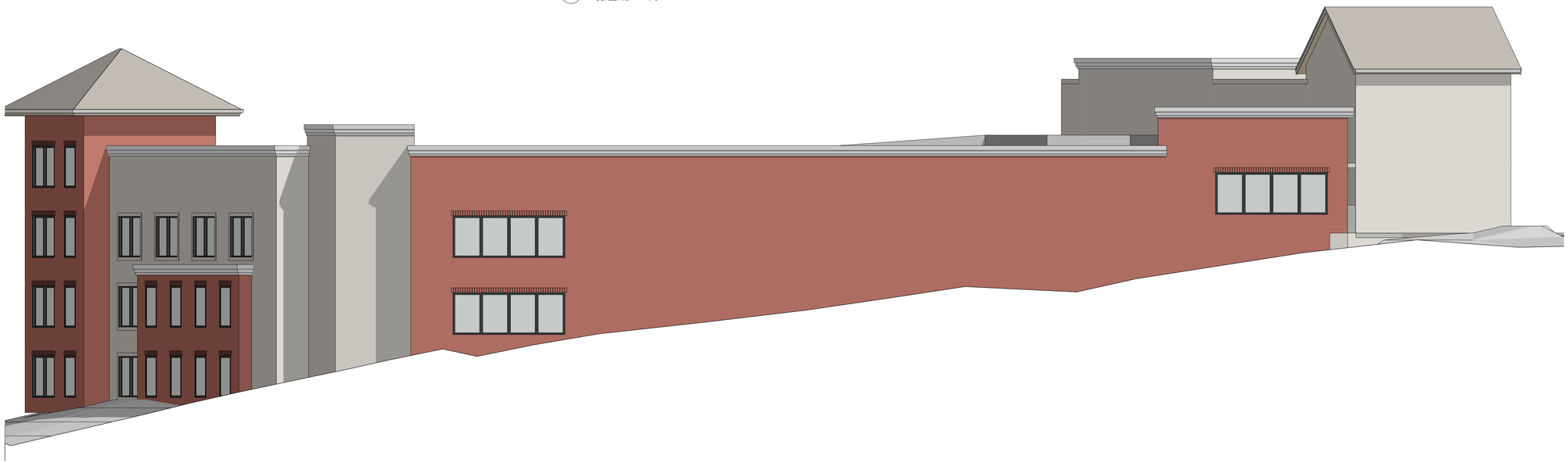

3 EAST ELEVATION
SCALE: 1/8" = 1'-0"

RUSSELL DAVIDSON
ARCHITECTURE + DESIGN

NEW PROJECT

#Site Address1
#Site City, #Site State #Site Postcode
APN: #APN

ID	NAME	DATE

SUBMITTED:	DATE
SCALE	AS NOTED
DRAWN BY:	#Drawn By
CHECKED BY:	RPD
JOB:	#Pln

BUILDING ELEVATIONS

A8

/Users/russell/Dropbox/Projects/Current/2018.19 Spring St Parking Garage/Archi/CAD/Current/Spring St Parking.pln

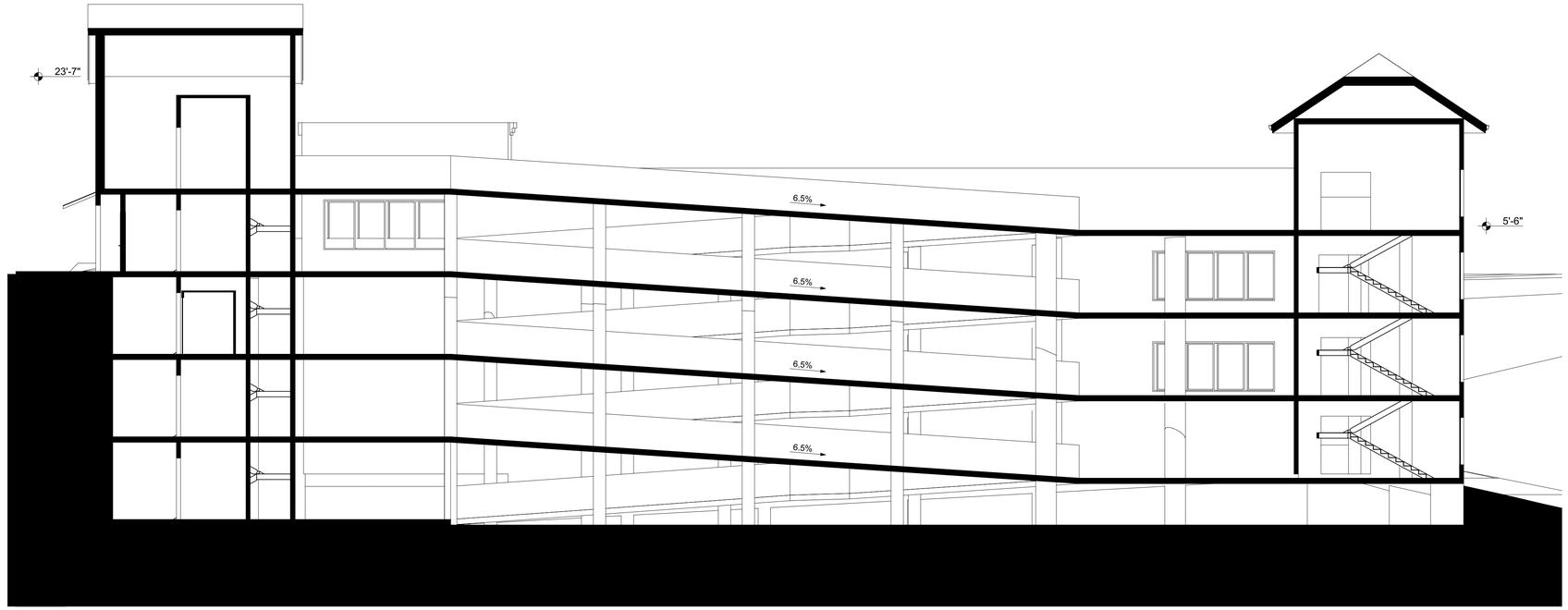

1 SECTION
SCALE: 1/8" = 1'-0"

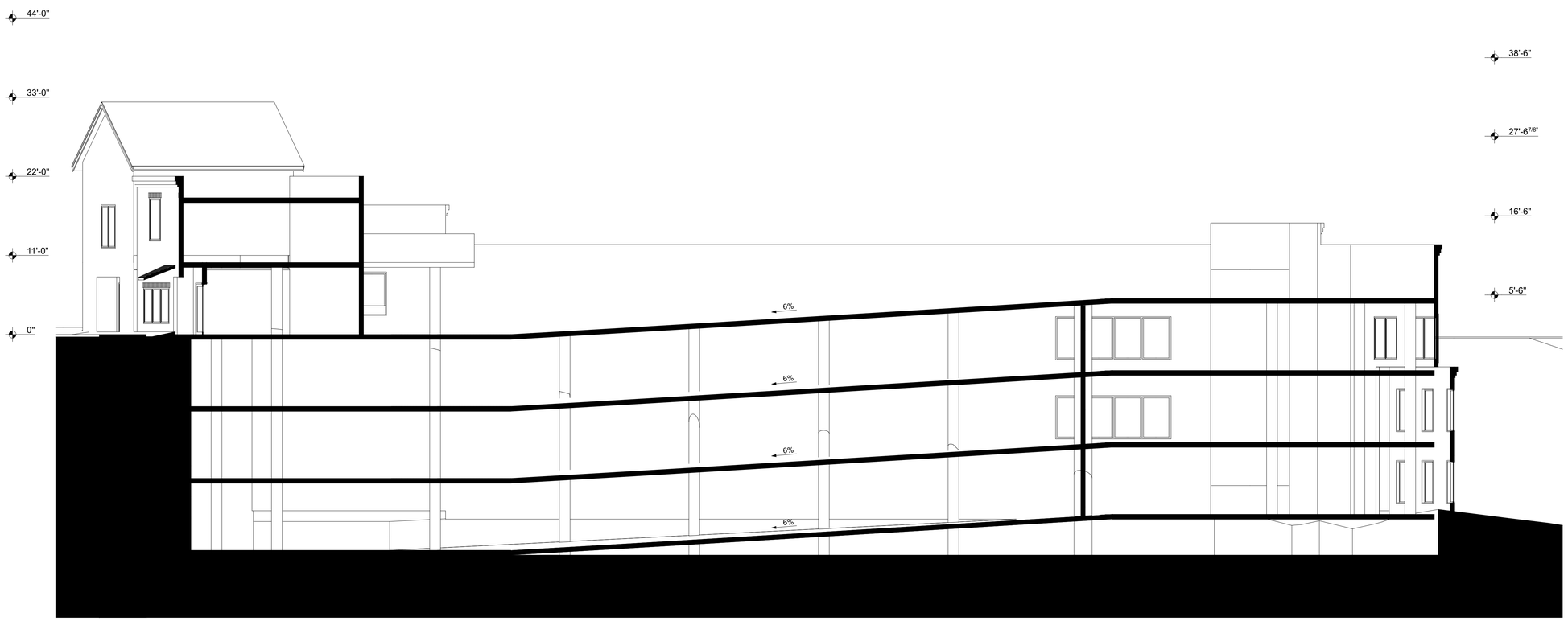

2 SECTION
SCALE: 1/8" = 1'-0"

RUSSELL DAVIDSON
ARCHITECTURE + DESIGN

NEW PROJECT

#Site Address1
#Site City, #Site State #Site Postcode
APN: #APN

ID	NAME	DATE

SUBMITTED:	DATE
SCALE	AS NOTED
DRAWN BY:	#Drawn By
CHECKED BY:	RPD
JOB:	#Pln

BUILDING SECTIONS

A9

/Users/russell/Dropbox/Projects/Current/2018.19 Spring St Parking Garage/ArchCAD/Current/Spring St Parking.pln

REPORT TO CITY COUNCIL

City of Nevada City
317 Broad Street
Nevada City CA 95959
www.nevadacityca.gov

January 22, 2020

TITLE: Collaborative Homelessness Program with the Hospitality House and Behavioral Health

RECOMMENDATION: Provide the Police Department with the support and approval to continue the partnership with the Hospitality House, Behavioral Health and Turning Point in finding ways that are more effective in dealing with the homelessness and mental health epidemic in our region.

CONTACT: Chad Ellis, Police Chief
Joe Naake, Hospitality House Outreach Manager

BACKGROUND / DISCUSSION:
On August 16 2019, at the City's Strategic Planning Session Chief Ellis was tasked with coming up with a collaborative program to help our local community in dealing with the homelessness and mental health epidemic taking place in our area and throughout the state. Prior to the Strategic Planning Session several things had already been moving forward in this area as it has been an issue and challenge for many years. The Hospitality House in Grass Valley had applied for a grant through the Police Officers Standards in Training (POST) which is a state entity that regulates and mandates police training throughout the State of California. All local law enforcement agencies were supportive of the Hospitality House in applying for the grant and agreed to assist in any way possible. Due to all agencies working collaboratively, the grant was awarded in the amount of $100,000. The purpose was for the agencies to designate employees for training in becoming trainers in the area of homelessness, mental health issues, services and de-escalation. These trainers would then train all of Local Law Enforcement Officers in a POST certified course in the aforementioned topics. After local Law Enforcement were instructed, it was noted the training could potentially spread throughout the State and eventually become a mandated training for all Law Enforcement Officers.

In the early stages of the grant, Law Enforcement Executives partnered with Behavioral Health and the Hospitality House and traveled to Southern California to see how different Law Enforcement Agencies and organizations were dealing with some of their homelessness and behavioral health issues. Some of the information gathered was added to the curriculum that would be instructed under the POST Grant.

A significant part of this partnership is with the Homeless Outreach and Medical Engagement Team (HOME team). This team is comprised of employees of the Hospitality House, Behavioral Health and Turning Point. The HOME team works very close with the Local Law Enforcement Agencies and is often times out in the field contacting our chronically homeless and/or individuals that suffer from mental illness.

It is the current belief of the Local Law Enforcement Agencies that this relationship is extremely valuable and significant strides are being made to assist our communities in dealing with these delicate issues.

ENVIRONMENTAL CONSIDERATIONS: None

FISCAL IMPACT: None

ATTACHMENTS: None

REPORT TO CITY COUNCIL

City of Nevada City
317 Broad Street
Nevada City, CA 95959
www.nevadacityca.gov

January 22, 2020

TITLE: An Ordinance of the City of Nevada City Amending Title 15 of the Nevada City Municipal Code to Adopt the 2019 California Building Standards with Local Amendments

RECOMMENDATION: Approve finding that CEQA exemptions apply as described herein, finding this action reflects the independent judgment of the City Council of Nevada City; approve for introduction and first reading of Ordinance by title only, waiving further reading of the entire Ordinance.

CONTACT: Bryan McAlister, City Engineer
Crystal Hodgson, Consulting City Attorney

BACKGROUND / DISCUSSION:
Every three years, the California Building Standards Commission adopts and publishes new editions of the California Building Standards Code that are required to be enforced in all parts of the State in accordance with California Health and Safety Code Section 17958. The California Building Standards Commission has adopted and published the 2019 triennial edition of the California Building Standards Code with an effective date of January 1, 2020. The California Building Standards Code includes the 2019 California Building, Electrical, Plumbing, Mechanical, Residential, Green Building, Energy, Historical Building, Existing Building, Referenced Standards, and Fire Codes. The California Building Standards Law provides that a local jurisdiction may, as reasonably necessary, establish more restrictive amendments based upon local climatic, topographical or geological conditions.

On November 12, 2019, the County of Nevada adopted all the required Codes with local amendments in December of 2019 by Ordinance (copy attached). Historically the City has contracted with the County for building permitting and inspection services since 1962, making it desirable to have essentially the same standards and amendments apply to both jurisdictions. The proposed City ordinance for adoption of the 2019 Building Standards has been reviewed by City of Nevada City Engineering and Fire departments and is recommended for approval.

Adoption of the proposed ordinance is exempt from CEQA review pursuant to CEQA Guidelines including Section 15378(b)(5) as an organizational or administrative governmental activity that will not result in direct or indirect physical changes to the environment, and Section 15060(c)(2) as an activity covered by the general rule that CEQA applies only to projects that have the potential for a direct or reasonably foreseeable indirect physical change in the environment.

ENVIRONMENTAL IMPACT: Recommend finding ordinance is exempt from environmental review under CEQA pursuant to §§15378(b)(5) and 15060(c)(2) as recited in proposed ordinance.

FISCAL IMPACT: No direct fiscal impact to the City as County and City can adopt fees to cover costs of permit processing.

ATTACHMENTS:

1. County Ordinance, with attached Chapter V of the Land Use and Development Code (Exhibit "A")
2. Proposed City Ordinance No. 2020-XX with attached Building Standards Title 15 (Exhibit "A" to Ordinance No. 2020-XX)

ORDINANCE No._____

OF THE BOARD OF SUPERVISORS OF THE COUNTY OF NEVADA

AN ORDINANCE AMENDING CHAPTER V OF THE LAND USE AND DEVELOPMENT CODE OF THE COUNTY OF NEVADA, ADOPTING THE 2019 CALIFORNIA BUILDING STANDARDS, AND LOCAL AMENDMENTS THERETO; AND ADOPTION OF EXPRESS FINDINGS OF REASONABLE NECESSITY FOR CHANGES AND MODIFICATIONS TO THE CALIFORNIA BUILDING STANDARDS CODE BASED ON LOCAL CLIMATIC, GEOLOGICAL, OR TOPOGRAPHICAL CONDITIONS

THE BOARD OF SUPERIVISORS OF THE COUNTY OF NEVADA, STATE OF CALIFORNIA, ORDAINS AS FOLLOWS:

SECTION I: Legislative Purpose

The State of California revises its building standards on a triennial basis. The building standards are intended to regulate and govern the conditions and maintenance of all property, buildings, and structures by providing standards for supplied utilities, facilities, and other physical things and conditions essential to ensure that structures are safe, sanitary, and fit for occupancy and use.

It is the purpose and the intent of this Ordinance to make substantive revisions to Chapter V (Building) of the Land Use and Development Code to ensure Nevada County's conformity to the 2019 edition of the California Building Standards, to wit, the California Building Code, the California Residential Code, the California Green Building Standards Code, the California Plumbing Code, the California Electrical Code, the California Fire Code, the California Mechanical Code, the California Energy Code, the California Referenced Standards Code, the California Historical Building Code, the California Existing Building Code, the 1997 Uniform Housing Code, the 1997 Uniform Code for the Abatement of Dangerous Buildings, the 2018 International Swimming Pool and Spa Code and the 2018 International Property Maintenance Code.

Pursuant to Health and Safety Code Section 17958.5, *et seq*., a county may make such changes or modifications in the requirements contained in the provisions of the California Building Standards Codes, as are reasonably necessary because of local climatic, geological, or topographical conditions. Nevada County's amendments to the 2019 California Building Standards, which have been made in response to unique climatic, geological, or topographical conditions in Nevada County, are codified in Chapter V of the Land Use and Development Code. Local amendments to the California Building Standards Code shall not become effective until the modifications and findings have been filed with the Building Standards Commission.

SECTION II:

Chapter V of the Land Use and Development Code of the County of Nevada is hereby amended to read as set forth in Exhibit A attached hereto and incorporated herein by reference.

SECTION III:

A. The Board hereby finds and declares that the amendments to the 2019 California Building Standards, as codified in Chapter V of the Nevada County Land Use and Development Code, are reasonably necessary because of local climatic, geological, and topographical conditions, including average snowfalls ranging from .8 inches per year in the Western County to 202 inches per year in the Eastern County; and the high risk of forest fires within the County. Said amendments are deemed more restrictive than the published 2019 California Building Standards.

B. The Board hereby finds and declares that this Ordinance is exempt from CEQA review pursuant to the CEQA guidelines, including Section 15378(b)(5) as an adoption and incorporation by reference of the 2019 California Building Standards Codes is an organizational or administrative governmental activity that will not result in direct or indirect physical changes to the environment, and Section 15060(c)(2) as it is an update to existing laws applicable to building construction and occupancy and will not create a potential for direct, indirect, or reasonably foreseeable physical change in the environment.

SECTION IV:

If any provision of this Ordinance is held unconstitutional or otherwise invalid, the remainder of the Ordinance shall not be affected hereby and shall remain in full force and effect.

This Ordinance shall take effect and be in force at the expiration of thirty (30) days from and after its passage, and it shall become operative on the ___ day of _____, ____, and before the expiration of fifteen (15) days after its passage it shall be published once, with the names of the Supervisors voting for and against same in _____, a newspaper of general circulation printed and published in the County of Nevada.

EXHIBIT A

CHAPTER V: BUILDINGS

Article 1	**General**
Article 2	**Division II Administration Amendments**
Article 3	**California Building Code Amendments**
Article 4	**California Residential Code Amendments**
Article 5	**Fire Safety Standards and California Fire Code Amendments**
Article 6	**Permit Fees**
Article 7	**California Plumbing Code Amendments**
Article 8	**California Mechanical Code Amendments**
Article 9	**International Swimming Pool and Spa Code Amendments**
Article 10	**Repealed**
Article 11	**Landform Grading for Agriculture**
Article 12	**California Electrical Code**
Article 13	**Grading**
Article 14	**Systems Electric Vehicle Charging Station Permitting Process**
Article 20	**Small Residential Rooftop Solar**

EXHIBIT A

ARTICLE 1
GENERAL

Sections:

Sec. L-V 1.1	**Purpose**
Sec. L-V 1.2	**Applicability**
Sec. L-V 1.3	**Definitions**
Sec. L-V 1.4	**Codes and Regulations Adopted**
Sec. L-V 1.5	**Filing of Copies of Codes**
Sec. L-V 1.6	**Code Adoption Procedure**
Sec. L-V 1.7	**Compliance with Environmental Health, Zoning, Encroachment Requirements and other Regulations Prerequisite to a Building Permit**
Sec. L-V 1.8	**Compliance with Encroachment Requirements and Other Regulations Prerequisite to a Grading Permit**
Sec. L-V 1.9	**Location of Property Lines**
Sec. L-V 1.10	**Transfer of Permit**

Sec. L-V 1.1 Purpose

This Chapter is enacted for the purpose of providing minimum standards to safeguard life or limb, health, property and public welfare by regulating and controlling the design, construction, quality of materials, use and occupancy, location and maintenance of all buildings and structures, regulated equipment, grading and construction activities that result in a land disturbance on private property within this jurisdiction.

Nothing in the codes hereinafter adopted shall be construed to prevent any person from performing his own building, mechanical, plumbing or electrical work, when performed with permits in compliance with this Chapter.

Sec. L-V 1.2 Applicability

This Chapter shall apply, to the extent permitted by law, to all construction in the unincorporated Nevada County.

Sec. L-V 1.3 Definitions

Whenever any of the following names or terms are used herein or in any of the codes adopted by reference by this Chapter, unless the context directs otherwise, such names or terms so used shall have the meaning ascribed hereto by this Section, to wit:

A. BUILDING OFFICIAL, ADMINISTRATIVE AUTHORITY, RESPONSIBLE OFFICIAL, and similar references to a chief administrative position shall mean the Building Official of the County of Nevada; provided, however, that where such terms are used in connection with those duties imposed by statute or ordinance upon the County Environmental Health Officer, said terms shall include the County Environmental Health Director; where such terms are used in connection with those duties imposed by statute or ordinance upon the Chief of a Fire Department or the County Fire Marshal, said terms shall include the Chief of the Fire Department or County Fire Marshal; and where such terms are used in connection with those duties imposed by ordinance upon the County Code Compliance Officer, said terms shall include the County Code Compliance Officer.

B. BUILDING DEPARTMENT, OFFICE OF ADMINISTRATIVE AUTHORITY, or HOUSING DEPARTMENT shall mean the Building Department of the County of Nevada.

C. CITY or JURISDICTION shall mean the County of Nevada when referring to a political entity, or an unincorporated area of said County when referring to area.

D. CLERK OF THIS JURISDICTION means Clerk of the Board of Supervisors.

E. GOVERNING BODY, LEGISLATIVE BODY or APPOINTING AUTHORITY means the Board of Supervisors of the County of Nevada.

F. BOARD OF APPEALS, HOUSING ADVISORY and APPEALS BOARD and any other reference to an appellate body in any of the uniform codes adopted by reference in this Chapter shall mean the Building and Accessibility Standards Board of Appeals provided for in Section L-V 2.1 of the Nevada County Land Use and Development Code.

EXCEPTION: The appellate body for fire and panic safety regulations is within the jurisdiction of the County Fire Marshal/District Fire Chief.

G. TECHNICAL CODES refer to those codes and publications adopted by the County of Nevada containing the provisions for design, construction, alteration, addition, repair, removal, demolition, use, location, occupancy and maintenance, of buildings and structures and building service equipment as enumerated in Section L-V 1.4 of the Nevada County Land Use and Development Code.

Sec. L-V 1.4 Codes and Regulations Adopted

Subject to the modifications and amendments contained in this Chapter, the following codes and standards are hereby adopted and incorporated into the Land Use and Development Code of Nevada County by reference and having the legal effect as if their respective contents were set forth herein:

A. Division II, Scope and Administration, 2019 California Building Code.

B. The 2019 edition of the California Building Standards Code, known as the California Code of Regulations, Title 24, Part 12 (California Referenced Standards Code), in whole thereof.

C. The 2019 edition of the California Building Code, known as the California Code of Regulations, Title 24, Part 2 (California Building Code), incorporating the International Building Code, 2018 Edition, of the International Code Council, the whole thereof with State amendments, including appendixes "C", "H", "I" and "J" and amendments set forth in Article 3 of this Chapter.

D. The 2019 edition of the California Building Standards Code, known as the California Code of Regulations, Title 24, Part 9 (California Fire Code), incorporating the International Fire Code, 2018 Edition, of the International Code Council, the whole thereof with State amendments, save and except article 86 thereof, including appendix chapters and amendments set forth in Article 5 of this Chapter.

E. The 2019 edition of the California Building Standards Code, known as the California Code of Regulations, Title 24, Part 5 (California Plumbing Code), incorporating the Uniform Plumbing Code, 2018 Edition, of the International Association of Plumbing and Mechanical Officials, the whole thereof with State amendments, including appendix chapters and amendments set forth in Article 7 of this Chapter.

F. The 2019 edition of the California Building Standards Code, known as the California Code of Regulations, Title 24, Part 4 (California Mechanical Code), incorporating the Uniform Mechanical Code, 2018 Edition, of the International Association of Plumbing and Mechanical Officials, the whole thereof with State amendments, including appendix chapters and amendments set forth in Article 8 of this Chapter.

G. The 2019 edition of the California Building Standards Code, known as the California Code of Regulations, Title 24, Part 3 (California Electrical Code), incorporating the National Electrical Code, 2017 Edition, of the National Fire Protection Association, the whole thereof with State amendments, including annex chapters and amendments set forth in Article 11 of this Chapter

H. The 2019 edition of the California Building Standards Code, known as the California Code of Regulations, Title 24, Part 2.5 (California Residential Code) incorporating the International Residential Code, 2018 Edition, of the International Code Council, the whole thereof with State Amendments, including appendixes "H", "J", "K", "Q", and "S" and amendments as set forth in Article 4 of this chapter.

I. The 2019 edition of the California Building Standards Code, known as the California Code of Regulation, Title 24, Part 11 (California Green Building Standards Code) in whole thereof, with State Amendments.

J. The 2019 edition of the California Building Standards Code, known as the California Code of Regulations, Title 24, Part 6 (California Energy Code) in whole thereof, with State Amendments.

K. The 2019 edition of the California Building Standards Code, known as the California Code of Regulations, Title 24, Part 8 (California Historical Building Code) in whole thereof, with State Amendments.

L. The 2019 edition of the California Building Standards Code, known as the California Code of Regulations, Title 24, Part 10 (California Existing Building Code), incorporating the International Existing Building Code, 2018 Edition, of the International Code Council, the whole thereof with State Amendments.

M. The 2018 International Property Maintenance Code, of the International Code Council.

N. The 1997 Uniform Code for the Abatement of Dangerous Buildings, of the International Conference of Building Officials.

O. The 1997 Uniform Housing Code, of the International Conference of Building Officials.

P. International Swimming Pool and Spa Code, 2018 Edition with the amendments set forth in Article 9 of this Chapter.

Sec. L-V 1.5 Filing of Copies of Codes

The Building Department of the County of Nevada shall maintain on file copies of the Codes and Standards referred to in Section L-V 1.4 of this Chapter.

Sec. L-V 1.6 Code Adoption Procedure

A. The Building Official shall provide the Board of Appeals with copies of all statutes newly adopted by the State, pursuant to the State Housing Law and State Building Standards Law (Health and Safety Code sections 17910 and 18901, *et seq*.).

B. The Building Official and Board of Appeals shall:

1. Provide technical review of the newly adopted codes.
2. Report such newly adopted codes to the Board of Supervisors and provide a draft recommendation for consideration by the Board to amend, add to, or repeal ordinances or regulations, to impose the same requirements as are contained in the new State laws, or to make changes or modifications in such requirements upon express findings because of local conditions or factors.
3. Request the Board of Supervisors to schedule a hearing not less than thirty days (30) from the date of their report and place one (1) copy of the codes to be considered by the Board in the office of the Building Department for review by the general public.

C. The Board of Supervisors shall, upon the request of the Building Official and Board of Appeals, schedule such public hearing to receive public testimony on the codes and any modifications thereto to be adopted by the Board.

D. The Clerk of the Board of Supervisors shall give notice of the time, place and subject matter of the public hearing scheduled on the matter before the Board. Notification shall be by publication in a newspaper of general circulation published and circulated within the County 10 days prior to the public hearing.

E. The Board of Supervisors shall hold such public hearing at the date and time scheduled and shall then act on the recommendation of the Board of Appeals.

Sec. L-V 1.7 Compliance with Environmental Health, Zoning, Encroachment Requirements and Other Regulations Prerequisite to a Building Permit

A. No building permit shall be issued for any building for which an individual sewage disposal and/or an approved water supply system must be installed, altered or added to, unless and until the Building Official is satisfied that adequate potable water and sewer disposal are available and that a permit is issued therefore.

B. No building permit shall be issued for which an encroachment or grading permit is required, unless and until the requirements prerequisite to said encroachment or grading permit has been met.

C. No building permit shall be issued unless and until the Building Official is satisfied that the construction authorized by the permit will not violate any existing law or ordinance.

D. No building permit shall be issued unless the Building Official is satisfied that adequate electrical power is supplied.

Sec. L-V 1.8 Compliance With Encroachment Requirements and Other Regulations Prerequisite to a Grading Permit

A. No grading permit shall be issued for which encroachment approval is required until an encroachment permit has been obtained from the appropriate enforcement agency.

B. No grading permit shall be issued until the Building Official is satisfied that the work authorized by the permit will not violate any existing law or ordinance, including the Nevada County Zoning Ordinance.

C. No grading permit shall be issued until a land use permit pursuant to Chapter II of the Nevada County Land Use and Development Code has been granted by the Nevada County Planning Agency.

EXCEPTION: Single family residential development and dams.

Sec. L-V 1.9 Location of Property Lines

Whenever the location of a property line or easement, or the title thereto, is disputed during the building or grading permit application process or during a grading or construction operation, a survey by a registered Land Surveyor or appropriately registered Civil Engineer may be required by the Building Official, at the expense of the applicant, prior to the application being approved or the grading or construction operation resuming.

Sec. L-V 1.10 Transfer of Permit

Whenever a parcel of real property is conveyed and a building permit and/or a grading permit has been issued for work on the property which has been started but not completed, the new owner of the property shall request a transfer of the permit(s) to his/her name and shall assume full responsibility for the work authorized by the permit(s). The new owners upon application shall pay a transfer fee as specified by the latest fee Resolution of the Board of Supervisors for a permit transfer.

EXHIBIT A

ARTICLE 2
DIVISION II ADMINISTRATION AMENDMENTS

Sections:

Sec. L-V 2.0	**Amendments Adopted**
Sec. L-V 2.1	**Section 113: Board of Appeals (change to read): 113.1: Building and Accessibility Standards Board of Appeals**
Sec. L-V 2.2	**Section 114: Violations (add the following)**
Sec. L-V 2.3	**Section 105.2: Work Exempt From Permit; Building Permits (change paragraph 1 to read)**
Sec. L-V 2.4	**Section 105.2: Work Exempt From Permit; Building Permits (add the following)**
Sec. L-V 2.5	**Section 105.2: Work Exempt From Permit; Building Permits (add paragraph to read)**
Sec. L-V 2.6	**Section 105.3.2: Time Limitation of Application**
Sec. L-V 2.7	**Section 105.5: Expiration (change to read)**
Sec. L-V 2.8	**Section 109.2: Schedule of Permit Fees (change to read)**
Sec. L-V 2.9	**Section 109.4: Work Commencing Before Permit Issuance (change to read)**
Sec. L-V 2.10	**Section 109.6: Fee Refunds (change to read)**

Sec. L-V 2.0 Amendments Adopted

The Administrative Division II 2019 California Building Code as adopted by Section L-V 1.4 is adopted with the following amendments:

Sec. L-V 2.1 Section 113: Board of Appeals (change to read): 113.1: Building and Accessibility Standards Board of Appeals

113.1 Building and Accessibility Standards Board of Appeals

A. In order to hear and decide appeals of discretionary orders, decisions or determinations made by the Building Official relative to the application and interpretation of the provisions of the technical codes, there shall be, and is hereby, created a Building and Accessibility Standards Board of Appeals for Nevada County.

B. The Board may also rule on appeals of discretionary orders, decisions or determinations made by the Building Official relative to the application and interpretation of State mandated energy regulations contained in Title 24, California Code of Regulations and requirements of the Historical Building Code.

C. The Board may also rule on appeals of discretionary orders, decisions or determinations made by the Building Official relative to the enforcement of the California Access to Public Accommodations by Physically Disabled Persons regulations (Health and Safety Code Sec. 19955, et seq.).

D. The Board shall consist of seven (7) members who are qualified by experience and training to pass on matters pertaining to building construction, building service equipment and grading. Two (2) of the seven (7) members shall be physically disabled persons who are qualified by experience and training to pass on matters pertaining to California Disabled Access Regulations. Said Board members may not be employees of the County of Nevada. Each member of the County Board of Supervisors is entitled to appoint one member who will serve at the pleasure of that Supervisor. The remaining two (2) Board members may be appointed by any member of the Board of the Supervisors. The members may be selected from the County at large without regard for Supervisorial District.

E. The Building Official shall be an ex officio member and serve as secretary to the Board but shall have no vote upon any matter before the Board.

F. The Board shall adopt reasonable rules and regulations for conducting its investigations and shall render all decisions and findings in writing to the Building Official with a duplicate copy to the appellant. The Board may recommend new legislation or comment on proposed legislation relating to building construction to the Board of Supervisors.

G. The Board shall have no authority relative to interpretation of the administrative provisions of this code nor shall it be empowered to waive any requirements of this code or the technical codes. The written decision from the Board is final and conclusive.

H. Notwithstanding limitations in paragraph “G”, the Board may consider and authorize substitutions of materials, alternate methods, and types of construction to those specified in Chapter V of the Nevada County Land Use and Development Code, provided that the material, method or work offered is, for the purpose intended, at least the equivalent of that specified in suitability, strength, effectiveness, fire resistance, durability, safety and sanitation. The Board shall require sufficient evidence or proof be submitted to substantiate claims of equivalency and may require tests as proof of compliance at appellant's expense.

Sec. L-V 2.2 Section 114: Violations (add the following)

A. Maintenance of any building, structure or building service equipment, which was unlawful at the time it was constructed or installed, if constructed or installed after January 1, 1962, shall constitute a continuing violation of this Code and the technical codes.

B. Violations of any provisions of this Code and the technical codes shall constitute a public nuisance and said conditions may be abated in accordance with existing laws and ordinances.

C. The issuance of a building permit, septic system, water well, or other permit may be withheld for property on which a violation of the provisions of this code and the technical codes exists, including work performed not in accordance with approved grading plans, until such violation has been corrected or mitigated. There shall be a connection between the violation and permit applied for.

D. The processing of a tentative tract map, parcel map, zoning change, lot line adjustment, or discretionary use permit may be withheld for property on which a violation of the provisions of this Code exists, including work performed not in accordance with approved grading plans, unless conditioned to require such violation to be corrected or mitigated.

E. CRIMINAL ENFORCEMENT. Any person who violates any provision of this Chapter shall be guilty of an infraction and, upon conviction thereof, shall be subject to mandatory fines of one hundred dollars ($100) for a first violation; five hundred dollars ($500) for a second violation of the same Section within a twelve month period; and one thousand dollars ($1,000) for a third or subsequent violation within a twelve month period. Every day any violation continues shall constitute a separate offense punishable by a separate fine.

F. In addition to the provisions of the Subsections above, a notice of violation of this Code or the technical codes may be recorded in the office of the County Recorder. A notice of expungement of the notice of violation shall be recorded with the County Recorder when it is determined that a permit is not required or all remedial work has been completed and approved.

G. NONEXCLUSIVE REMEDIES. The remedies provided herein are not exclusive, and are in addition to any other remedy or penalty provided by law.

Sec. L-V 2.3 Section 105.2: Work Exempt From Permit; Building Permits (amend paragraph 1 to read)

1. One-story detached accessory buildings without electrical, mechanical or plumbing not intended for habitation, provided the projected roof area does not exceed 200 square feet. One structure per parcel.

Sec. L-V 2.4 Section 105.2: Work Exempt From Permit; Building Permits (add the following)

14. Detached trellis or arbor accessory to single family residential property, provided the projected roof area does not exceed 200 square feet.

15. Agricultural structures, not intended for habitation, accessory to residential property in zoning districts "AG", "AE", "RA", "FR" and "TPZ" that meet all of the following conditions:

a. Not a place of employment where agricultural products are processed, treated, or packaged, nor shall it be a place used by the public. High and low tunnel greenhouses may be used by employees only related to cultivation of crops.

b. Of simple construction using conventional construction methods (concrete, steel frame, masonry and other technologies that generally require engineering are not exempt) or specifically approved manufactured structures.

c. No plumbing, electrical, or mechanical utilities installed.

d. Structures must meet the following limits:

1) Pole Barns. Limited in size to 1,000 square feet maximum. One pole barn per parcel or 20 acres. Open from ground to eave on all sides. Distance to other structures must be equal to its height, minimum of 20 feet. Minimum of 100 feet from property line.

2) Shade Structures. Cover limited to woven shade fabric.

3) Animal Husbandry. Limited in size to 400 square feet maximum. One per 5 acres. Single wall construction. Dirt floor or gravel. Distance to other structures minimum of 10 feet. Minimum of 40 feet from property line.

4) Pump Houses. Limited in size to 100 square feet.

5) Greenhouses. Limited in size to 400 square feet. One structure per parcel or 10 acres. Wood or PVC construction with rigid plastic or fiberglass cover. Dirt or gravel floor.

6) Storage Containers. Limited in size to 320 square feet. One container per parcel or 5 acres. Container is used for light nonhazardous agricultural storage and shall not be structurally modified or have any electrical, mechanical or plumbing utilities.

7) High and low tunnel greenhouses meeting the following criterion:

- Easily moveable
- Constructed of metal or plastic tubing and covered with agricultural cloth, plastic film, or shade screening.
- Exits are in compliance with the most recently adopted editions of the California Building and Fire Codes.
- Structures meet vegetation management clearance requirements in accordance with the most recently adopted edition of the California Fire Code and Public Resource Code Section 4291.
- Setbacks and height limitations in accordance with Chapter II of the Nevada County Land Use and Development Code.

i) Parcels 3 acres or greater in size shall meet the following size and setback standards:

- 3,600sqft per acre maximum
- 35ft in width maximum
- One story
- 10ft separation between structures minimum
- Clustering of structures is allowed

ii) Parcels less than 3 acres in size shall meet the following size and setback standards:

- 3,600sqft maximum
- 35ft in width maximum
- One story

- 10ft separation between structures minimum if multiple are proposed

All structures require site plan review and approval and a letter of exemption issued by the Building Official and Planning Director.

Sec. L-V 2.5 Section 105.2: Work Exempt From Permit; Building Permits (add paragraph to read)

Exemption from the permit requirements of this Section shall not be deemed to grant authorization for any work to be done in any manner in violation of the provisions of the technical codes adopted by this jurisdiction or any other laws or ordinances of this jurisdiction including zoning setback requirements.

Sec. L V 2.6 Time Limitation of Application (change to read)

Applications for which no permit is issued within 180 days following the date of application shall expire by limitation, and plans and other data submitted for review may thereafter be returned to the applicant or destroyed by the Building Official. The Building Official may extend time for action by the applicant for a period not exceeding 90 days upon request by the applicant in writing showing that circumstances beyond the control of the applicant have prevented action from being taken. No application shall be extended more than twice. In order to renew action on an application after expiration, the applicant shall resubmit plans and pay a new plan review fee.

Sec. L-V 2.7 Section 105.5: Expiration (change to read)

Every permit issued by the Building Official under the provisions of the technical codes shall expire by limitation and become null and void if the building or work authorized by such permit is not commenced within one year from the date of such permit or if the building or work authorized by such permit is suspended or abandoned for a period of one year at any time after the work is commenced. Before such work can be recommenced, the permit shall be renewed. The fee for renewal shall be a minimum of one-half the amount required for a new permit for such work, provided no changes have been made or will be made in the original plans and specifications for such work, and provided further that such suspension or abandonment has not exceeded one year. In order to renew action on a permit after the building or work has been suspended or abandoned or the permit has been expired for a period exceeding one year, the permittee shall pay a new full permit fee, submit plans meeting minimum standards per the most recent adopted versions of the California Building Standards Codes and obtain a new building permit. Permits deemed to have expired shall be subject to all permit related fee increases and new fees in effect at the time of permit renewal as applicable subject to the discretion of the Building Official. The Building Official shall have discretion to adjust permit renewal fees when extenuating circumstances exist.

Any permittee holding an unexpired permit may apply for an extension of the time within which work may commence under that permit when the permittee is unable to commence work within the time required by this section for good and satisfactory reasons. The Building Official may extend the time for action by the permittee showing that circumstances beyond the control of the permittee have prevented action from being taken. No permit shall be extended more than twice. Upon written request by the applicant, the Building Official may authorize an extension of up to an additional 180 days from the date the permit expiration date.

All building permits shall expire two years after the issuance date. The permit may be extended beyond this period if the work authorized by the permit is being diligently pursued but only upon written request by the permittee. Review of the request and granting of an approved time extension beyond two years shall be made by the Building Official. A maximum one year extension of time may be granted in 180 day intervals when approved by the Building Official based on extenuating circumstances.

Permits may be issued with a limited time when necessary to abate dangerous, substandard or illegal conditions. The Building Official may establish the expiration date depending on the health/safety hazard.

Sec. L-V 2.8 Section 109.2: Schedule of Permit Fees (change to read)

Permit fees shall be as set forth in the fee schedule adopted by Resolution of the Nevada County Board of Supervisors.

Plan review fees shall be as set forth in the fee schedule adopted by Resolution of the Nevada County Board of Supervisors.

Sec. L-V 2.9 Section 109.4: Work Commencing Before Permit Issuance (change to read)

If work is done in violation of this Chapter or such work is not done in accordance with an approved permit, a fee covering investigation of any violation, inspection and plan checking of work required to correct such violation shall be charged to the violator to cover all actual costs. This fee, in addition to the permit fee, shall be collected whether or not a permit is then or subsequently issued. The payment of such fee shall not exempt an applicant from compliance with all other provisions of either this Code or the technical codes nor from the penalty prescribed by law. The applicant may appeal the assessment of a penalty to the Building and Accessibility Standards Board of Appeals.

Where work for which a permit is required by this Chapter is started or proceeded with prior to the obtaining of such permit, the fees set forth in the fee schedule adopted by the Board of Supervisors may be increased by the Building Official but shall not be more than double the fees specified for obtaining the permit for the first violation and not more than fourfold the fees specified for obtaining the permit for a second or subsequent violation by the same individual. The payment of such fee shall not exempt an applicant from compliance with all other provisions of either this code or the technical codes in the execution of the work nor from penalties prescribed in Sections L-I 1.7 and L-V 2.2 of the Land Use and Development Code.

Sec. L-V 2.10 Section 109.6: Fee Refunds (change to read)

Upon request of the Applicant prior to the expiration of the building permit, the Building Official may authorize refunding the permit fee, less an administration fee established by Resolution of the Board of Supervisors, when no work has been performed under a permit issued in accordance with this Code.

The Building Official may authorize refunding the plan review fee paid, less a refund processing fee and the administration fee established by Resolution of the Board of Supervisors, when an application for a permit for which a plan review fee has been paid is withdrawn or canceled before any examination time has been expended. The refund of these separate and independent fees shall not exceed 80% of the individual plan review or building permit fee.

The Building Official shall not authorize the refunding of any fee paid except upon written application filed by the original permittee not later than 90 days after the date of fee payment. Refund amounts of less than $25.00, calculated after appropriate deductions, shall not be refunded.

EXHIBIT A

ARTICLE 3
CALIFORNIA BUILDING CODE AMENDMENTS

Sections:

Sec. L-V 3.0	**Amendments Adopted**
Sec. L-V 3.1	**Division II, Section 113: Board of Appeals, General (change to read)**
Sec. L-V 3.2	**Division II, Section 105.2: Work Exempt from Permit (change to read)**
Sec. L-V 3.2.1	**Division II, Section 105.3.2: Time Limitation of Application (change to read)**
Sec. L-V 3.3	**Division II, Section 105.5: Permit Expiration (change to read)**
Sec. L-V 3.4	**Division II, Section 109.2: Schedule of Permit Fees (change to read)**
Sec. L-V 3.5	**Section 202: R (add the following definition)**
Sec. L-V 3.6	**Section 1505.1: Fire Classification (change to read as follows)**
Sec. L-V 3.7	**Section 1507.1.2: Ice Barriers (add the following)**
Sec. L-V 3.8	**Section 1507.2.8.2: Valleys and Section 1507.2.8.2 #4 Valleys: Flashing (add the following text)**
Sec. L-V 3.9	**Section 1507.2.3: Underlayment (add the following)**
Sec. L-V 3.10	**Section 1608.2: Ground Snow Loads (change to read as follows)**
Sec. L-V 3.11	**Section 1608.2.1: Snow Loads (add a subsection to read as follows): 1608.2.1: Ramadas**
Sec. L-V 3.12	**Added Section 1608.4**
Sec. L-V 3.13	**Section 7.6.1: Unbalanced Snow Loads for Hip and Gable Roofs, ASCE 7-10 (add a new subsection to read) 7.6.1.1: Unbalanced Snow Loads for Ground Snow Loads Over 100 PSF**
Sec. L-V 3.13.1	**Section 7.7.1: Lower Roof of a Structure, ASCE 7-10 (change equation 7.7-1 to read as follows)**
Sec. L-V 3.13.2	**Table 7-2 Exposure Factor, Ce, ASCE 7-10 (change foot note 'a' to read as follows)**
Sec. L-V 3.13.3	**Table 7-3 Thermal Factor, Ct, ASCE 7-10 (replace Table 7-3 Thermal Factor, Ct, with the following table)**
Sec. L-V 3.14	**Section 1809.5 Frost Protection (change to read)**
Sec. L-V 3.15	**Section 3109.2.1: Barrier Height and Clearances (change to read)**

Sec. L-V 3.0 Amendments Adopted

The California Building Code as adopted by Section L-V 1.4 is adopted with the following amendments:

Sec. L-V 3.1 Division II Section 113: Board of Appeals, General (change to read)

Appeals resulting from decisions or determinations made by the Building Official relative to the application and interpretation of this Code shall be heard by the Building and Accessibility Standards Board of Appeals as set forth in Section L-V 2.2 of the Nevada County Land Use and Development Code.

Sec. L-V 3.2 Division II, Section 105.2: Work Exempt from Permit (change to read)

Work exempt from permit requirements shall be as set forth in the 2016 California Building Code, Section 105.2, as adopted by Nevada County, with County amendments.

Sec. L-V 3.2.1 Division II, Section 105.3.2: Time Limitation of Application (change to ready)

The time limitation of permit applications shall be as set forth in the California Building Code, Section 105.3.2, as adopted by Nevada County, with County amendments.

Sec. L-V 3.3 Division II Section 105.5: Permit Expiration (change to read)

Permit expiration for every permit issued by the Building Official shall be as set forth in the California Building Code, Section 105.5, as adopted by Nevada County, with County amendments.

Sec. L-V 3.4 Division Section 109.2 Schedule of permit fees (change to read)

Permit fees shall be as set forth in the fee schedule adopted by Resolution of the Nevada County Board of Supervisors.

Plan review fees shall be as set forth in the fee schedule adopted by Resolution of the Nevada County Board of Supervisors.

Sec. L-V 3.5 Section 202: R (add the following definition)

RAMADA is any freestanding roof, or shade structure, installed or erected above a mobile home, manufactured home, commercial coach, or any portion thereof.

Sec. L-V 3.6 Section 1505.1: Fire Classification (change to read as follows)

The roof covering or roofing assembly on any structure regulated by this Code, unless specifically exempted, shall be listed Class A, as classified in Section 1505.1.

The roof covering assembly includes the roof deck, underlayment, interlayment, insulation and covering, which is assigned a roof covering classification.

Sec. L-V 3.7 Section 1507.1.2: Ice Barriers (add the following): 1507.2.8.3: Underlayment Ice Dams

1507.2.8.3 UNDERLAYMENT ICE DAMS. An "ice dam" or "ice guard" is required on the roofs of heated buildings constructed at elevations above 4,000 feet above sea level. All roofs, regardless of covering, with a pitch of less than 8 in 12 shall be protected against leakage (caused by ice and snow) by either: (1) a base sheet of felt solid cemented to the roof sheathing with an approved cementing material, or (2) an approved manufactured membrane installed per the manufacturer's specifications. Application shall extend from the roof eave edge up the roof to a line five (5) feet horizontally inside the exterior wall line of the heated building and up 30 inches along each side of a valley. Where there exists both conditioned space and unconditioned space, the required covering shall also extend horizontally to a point at least five (5) feet onto the unconditioned space. This "ice dam"/"ice guard" shall be in addition to any underlayment otherwise required.

Sec. L-V 3.8 Section 1507.2.9.2: Valleys (add the following text)

Above 4,000 feet elevation above sea level, valley flashing shall be installed to the requirements for severe climate (areas subject to wind-driven snow and ice buildup).

Sec. L-V 3.9 Section 1507.3.3: Underlayment (add the following)

Above 4,000 feet elevation above sea level, underlayment shall be installed to the requirements for severe climate (areas subject to wind-driven snow and ice buildup).

Sec. L-V 3.10 Section 1608.2: Ground Snow Loads (change to read as follows)

A. All of Nevada County is declared a snow area. Buildings and structures shall be designed to resist snow loads as set forth herein. Except as provided in this Section, snow load requirements shall be as shown in Tables 16-C-1 and 16-C-2.

Table 16-C-1

Snow load requirements applicable west of the west section line of Sections 5, 8, 17, 20, 29 & 32 R. 16 E., T 17 and 18 N., M.D.B. and M.

Elevation	Snow Load
0-2000 ft.	29 psf

2001-2500 ft.	43 psf
2501-3000 ft.	57 psf
3001-3500 ft.	71 psf
3501-4000 ft.	117 psf
4001-4500 ft.	157 psf
4501-5000 ft.	200 psf
5001-5500 ft.	257 psf
5501-6000 ft.	314 psf
6001-6500 ft.	371 psf
6501-7000 ft.	428 psf
7001-7500 ft.	485 psf
7501-8000 ft.	542 psf

Table 16-C-2

Snow load requirements applicable east of the east section line of Sections 5, 8, 17, 20, 29 & 32 R. 16 E., T 17 and 18 N., M.D.B. and M.

Elevation	Snow Load
0-5000 ft.	71 psf
5001-5500 ft.	129 psf
5501-6000 ft.	186 psf
6001-6500 ft.	243 psf
6501-7000 ft.	300 psf
7001-7500 ft.	357 psf
7501-8000 ft.	400 psf
8001-8500 ft.	443 psf

Intermediate values may be interpolated from Table 16-C-1 and Table 16-C-2 by proportion.

B. The snow loads for within Sections 5, 8, 17, 20, 29 and 32 R., 16 E., T. 17 and 18 N., M.D.B. and M. shall be on a straight line proportion between the values shown in Table 16-C-1 and Table 16-C-2 based on the distance of the site from the boundary of the transition zone.

C. Higher snow loading than those shown in Tables 16-C-1 and 16-C-2 may be required by the Building Official in local areas of known higher snow accumulation.

D. Deviations from the above set forth snow loading may be permitted by the Building Official, provided the snow load and conditions in each individual case are derived and certified by a registered or licensed design professional who can show proper experience in snow load evaluation. Snow load design procedure shall be as set forth in Section 1608.

E. In no case shall the design snow load be less than 20 psf.

Sec. L-V 3.11 Section 1608.2.1: Snow Loads (add subsection to read as follows): 1608.2.1: Ramadas

1608.2.1 RAMADAS. Mobile homes or commercial coaches that do not meet the applicable snow load requirement of Title 25, California Code of Regulations, or Section L-V 3.10 of the Nevada County Land Use and Development Code for their location, shall be protected by a ramada designed for the loading. A registered or licensed design professional shall design such ramadas.

Sec. L-V 3.12 Added Section 1608.4

Depth of ground snow may be calculated by dividing the applicable snow load set forth in Section L-V 3.10 of the Nevada County Land Use and Development Code by 25.

Sec. L-V 3.13 Section 7.6.1: Unbalanced Snow Loads for Hip and Gable Roofs, ASCE 7-16 (add a new subsection to read) 7.6.1.1: Unbalanced Snow Loads for Ground Snow Loads Over 100 PSF

7.6.1.1: Unbalanced Snow Loads for Ground Snow Loads Over 100 PSF

The following conditions are for the leeward side of a structure. The windward loading shall be in accordance with Section 7.6.1.

1.) For roof pitches of less than 6/12 (26.6 degrees) where the ground snow load (Pg) exceeds 100 psf, the unbalanced snow load need not exceed:

0 psf at the ridge and
(hr)γ psf at the eave
(see Figure 7.6.1.1-1)

Where: hr - Vertical distance between the eave and the ridge (ft)
γ - Density of snow (pcf)

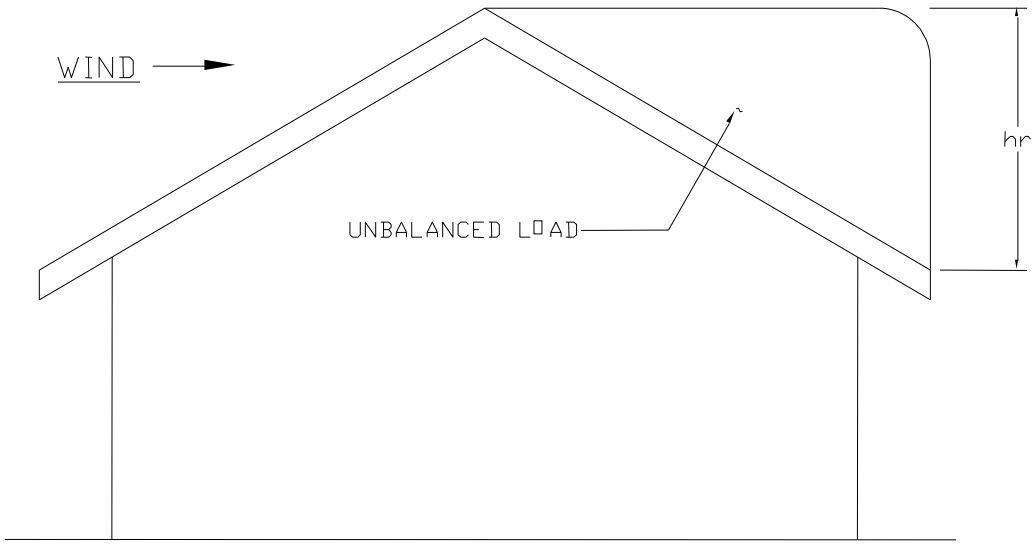

Figure 7.6.1.1-1

2.) For roof pitches of 6/12 (26.6 degrees) and greater where the ground snow load (Pg) exceeds 100 psf where the roof is partially exposed or sheltered in Terrain Category B and C, or sheltered in Terrain Category D, the unbalanced snow load need not exceed the sloped roof snow load (Ps). Terrain Categories are those defined in Table 7.3-1. For areas not meeting the terrain category and exposure as described, the unbalanced snow load need not exceed the load as defined in 1.) above.

Sec. L-V 3.13.1 Section 7.7.1: Lower Roof of a Structure, ASCE 7-16 (change equation 7.7-1 to read as follows)

γ = 25 pcf

(in SI: γ = 3.9 kN/m3)

Sec. L-V 3.13.2 Table 7.3-1 Exposure Factor, Ce, ASCE 7-16 (change footnote 'a' to read as follows)

[a]Definitions: Partially Exposed: all roofs except as indicated in the following text. Fully Exposed: roofs exposed on all sides with no shelter[b] afforded by terrain, higher structures, or trees. Roofs that contain several large pieces of mechanical equipment, parapets that extend above the height of the balanced snow load (h_b), or other obstructions are note in this category. Sheltered: roofs located where there are very tight conifer trees in very close proximity to a structure, r if an obstruction, such as a tall hill, is located within a distance of 10 times the height of the difference in height between the top of the roof and the top of the obstruction as noted in footnote “b”.

Sec. L-V 3.13.3 Table 7.3-2 Thermal Factor, Ct, ASCE 7-16 (replace Table 7.3-2 Thermal Factor, Ct, with the following table)

TABLE 7.3-2 THERMAL FACTOR, Ct

Thermal Condition[a]	C_t
All Structures except as indicated below	1.0
Structures kept just above freezing, structures with specifically designed cold roofs[c] and for enclosed portions of a completely unheated structure.	1.1
Structures intentionally kept below freezing	1.2
Continuously heated greenhouses[b] with a roof having a thermal resistance (R-value) Less than 2.0 ^{o}Fxhxft^2/Btu (0.4 Kxm^2/W)	0.85

[a] These conditions shall be representative of the anticipated conditions during winters for the life of the structure.

[b] Greenhouses with constantly maintained interior temperature of 50 ^{o}F (10 ^{o}C) or more at any point three (3) feet above the floor level during winters and having either a maintenance attendant on duty at all times or a temperature alarm system to provide warning in the event of a heating failure.

[c] A specifically designed cold roof is defined as a well vented (exceeding code minimum) roof with an insulation system intended to mitigate icing at the eaves, which creates an air-tight or nearly air-tight envelope below the well-ventilated space.

Sec. L-V 3.14 Section 1809.5 Frost Protection (change to read)

Unless erected on solid rock, to protect against frost and freezing, the minimum foundation depth is 18 inches below grade if between 4,001-7,000-foot elevation and 24 inches below grade for 7,000-foot elevation and above.

Exception: Interior footings shall be a minimum of 12 inches below grade.

Sec. L-V 3.15 Section 3109.2.1: Barrier Height and Clearances (change to read)

The top of the barrier shall be at least 60 inches (1524mm) above grade measured on the side of the barrier that faces away from the swimming pool. The maximum vertical clearance between grade and the bottom of the barrier shall be two (2) inches (51mm) measured on the side of the barrier that faces away from the swimming pool. Where the top of the pool structure is above grade, the barrier is authorized to be at ground level or mounted on top of the pool structure, and the maximum vertical clearance between the top of the pool structure and the bottom of the barrier shall be four (4) inches (102mm).

EXHIBIT A

ARTICLE 4
CALIFORNIA RESIDENTIAL CODE AMENDMENTS

Sections:

Sec. L-V 4.0	**Amendments Adopted**
Sec. L-V 4.1	**Division II Administration, Section R105.2 Work Exempt from Permit**
Sec. L-V 4.2	**Section R105.2: Work Exempt from Permit; Building Permits**
Sec. L-V 4.3	**Section R105.5: Expiration**
Sec. L-V 4.4	**Section R108.2: Schedule of Permit Fees**
Sec. L-V 4.5	**Section R108.5: Refunds**
Sec. L-V 4.6	**Section R108.6: Work Commencing Before Permit Issuance**
Sec. L-V 4.7	**Section R301.2.3 Snow Loads**
Sec. L-V 4.8	**Section R301.2 Table R301.2(1) Climatic and Geographic Design Criteria**
Sec. L-V 4.9	**Section R403.1.4.1 Frost Protection (change to read)**

Sec. L-V 4.0 Amendments Adopted

The California Residential Code as incorporated into the Land Use and Development Code by Section L-V 1.4 is adopted with following amendments:

Sec. L-V 4.1 Division II Administration, Section R105.2 Work Exempt from Permit (changed to read)

Refer to L-V 2.3, Section 105.2.

Sec. L-V 4.2. Section R105.2: Work Exempt From Permit; Building Permits (add paragraph to read)

Refer to L-V 2.5, Section 105.2.

Sec. L-V 4.3 Section R105.5: Expiration (change to read)

Refer to L-V 2.7, Section 105.5.

Sec. L-V 4.4 Section R108.2: Schedule of Permit Fees (change to read)

Refer to L-V 2.8, Section 109.2.

Sec. L-V 4.5 Section R108.5: Refunds (change to read)

Refer to L-V 2.10, Section 109.6.

Sec. L-V 4.6 Section R108.6: Work Commencing Before Permit Issuance

Refer to L-V 2.9, Section 109.4.

Sec. L-V 4.7 R301.2.3: Snow Loads (change to read)

Refer to L-V 3.10 – 3.13.3

Sec. L-V 4.8 Section R301.2 & Table R301.2(1) Climatic and Geographic Design Criteria

Table R301.2 (1) changed to the read the following:

TABLE R301.2(1)
CLIMATIC AND GEOGRAPHICAL CRITERIA

GROUND SNOW LOAD	WIND DESIGN				SEISMIC DESIGN CATEGORY	SUBJECT TO DAMAGE FROM			WINTER DESIGN TEMP (c)
	Speed (mph) (e)	Topographic effects	Special wind region (d)	Windborne debris zone		Weathering (a)	Frost line depth (b)	Termite	
Per Site Elevation/ Location	110	NO	Yes	No	Specific Site Location	Specific Site Location	Per Site Elevation/L ocation	YES	Specific Site Location

ICE BARRIER UNDERLAYMENT REQUIRED	FLOOD HAZARDS	AIR FEEZING INDEX	MEAN ANNUAL TEMP (f)	MANUAL J DESIGN CRITERIA (g)
Yes, Above 4,000ft elevation	PER FEMA MAPPING	2000	Specific Site Location	Specific Site Location

For SI: 1 pound per square foot = 0.0479 kPa, 1 mile per hour = 0.447 m/s

a. Site elevations over 4,000ft have “Severe” weathering. Elevations at or below 4,000ft have “Negligible” weathering unless determined otherwise by the Building Official based on specific site conditions.
b. The frost line depth may require deeper footings than indicated in Figure R403.1(1).
c. Temperatures in accordance with the 2019 California Energy Code and National Climatic Center data table.
d. The licensed California Design Professional must use local weather data to determine wind speed for projects that have site elevations over 4,000ft.
e. Ultimate wind speed
f. Mean annual temperature based on specific site location per the National Climatic Data Center date table “Air Freezing Index – USA Method (Base 32 degrees F).”
g. Design criteria based on specific site location in accordance with the joint appendices of the 2019 California Energy Code

Sec. L-V 4.9 Section R403.1.4.1 Frost Protection (change to read)

Refer to Sec. L-V 3.14

EXHIBIT A

ARTICLE 5
FIRE SAFETY STANDARDS AND CALIFORNIA FIRE CODE AMENDMENTS

Sections:

Sec. L-V 5.1	**Purpose**
Sec. L-V 5.2	**Application**
Sec. L-V 5.3	**Definitions**
Sec. L-V 5.4	**Responsibility for Enforcement and Review**
Sec. L-V 5.5	**Duties of County Fire Marshal**
Sec. L-V 5.6	**Appointment of County Fire Marshal**
Sec. L-V 5.7	**Fire Agency Appeals**
Sec. L-V 5.8	**Code Adoption Procedure**
Sec. L-V 5.9	**Permits for Burning Operations**
Sec. L-V 5.10	**Incinerators, Open Burning and Commercial Barbecue Pits, Additional Enforcement Authorized**
Sec. L-V 5.11	**Construction**
Sec. L-V 5.12	**Fire-Extinguishing Equipment; and Supervision of Incinerator Burning Operations**
Sec. L-V 5.13	**Open Burning**
Sec. L-V 5.14	**2019 California Fire Code Adopted**
Sec. L-V 5.15	**Section 105: Permits (add a subsection to read): 105.8: New Materials, Processes or Occupancies Which May Require Permits**
Sec. L-V 5.16	**California Fire Code, Section 105.6: Required Operational Permits (add subsections to read): 105.6.52 Cannabis Operations; 105.6.53 Organized Camps**
Sec. L-V 5.17	**California Fire Code, Section 110.4: Violation Penalties (amend section to read)**
Sec. L-V 5.18	**California Fire Code, Section 110.4: Violation Penalties (add subsection to read) 110.4.2 Reduction of Penalty**
Sec. L-V 5.19	**California Fire Code, Section 112.4: Failure to comply (amend section to read)**
Sec. L-V 5.20	**California Fire Code, Section 106.2: Schedule of Permit Fees (amend section to read)**
Sec. L-V 5.21	**California Fire Code, Section 505: Premises Identification (add a subsection to read): 505.3 Utility Identification**
Sec. L-V 5.22	**California Fire Code, Section 506.1: Key Box (add the following text)**
Sec. L-V 5.23	**California Fire Code, Section 604: Electrical Equipment, Wiring and Hazards (add a subsection to read): 604.3.2 Auxiliary Generator Power**
Sec. L-V 5.24	**California Fire Code, Section 903.2.8: Group R (add a subsection to read): 903.2.8.5 Manufactured Housing Fire Sprinklers**
Sec. L-V 5.25	**California Fire Code, Section 907: Fire Alarm and Detection Systems (add a subsection to read): 907.11 False Alarms**
Sec. L-V 5.26	**Section 5706.2.4.4: Location Where Above Ground Tanks are Prohibited (add exceptions)**
Sec. L-V 5.27	**California Fire Code Section 6103: Installation of Equipment (add a subsection to read): Section 6103.4: High Elevation Requirements**

Sec. L-V 5.28	**California Fire Code, Section 6107: Safety Precautions and Devices (add a subsection to read): 6107.5 Protecting Appurtenances from the Elements**
Sec. L-V 5.29	**California Fire Code Appendix B, Table B105.2: Required Fire-Flow for Buildings Other Than One-and-Two-Family Dwellings, Group R-3 and R-4 Buildings and Townhouses (amend table to read)**
Sec. L-V 5.30	**Appendix B: Fire-Flow Requirements for Buildings (add a section to read as follows): B107 Automatic Fire Alarm System**
Sec. L-V 5.31	**Appendix B: Fire-Flow Requirements for Buildings (add a section to read as follows): B108 Automatic Fire Sprinkler System**
Sec. L-V 5.32	**Appendix C: Fire Hydrant Location and Distribution (add a section to read as follows): C106 Location of Dry Hydrants**
Sec. L-V 5.33	**Appendix C: Fire Hydrant Location and Distribution (add a section to read as follows): C107 Installation of Dry Hydrants**
Sec. L-V 5.34	**Appendix C: Fire Hydrant Location and Distribution (add a section to read as follows): C108 Dry hydrant connection**
Sec. L-V 5.35	**Appendix C: Fire Hydrant Location and Distribution (add a section to read as follows): C109 Freeze Protection**
Sec. L-V 5.36	**Appendix C: Fire Hydrant Location and Distribution (add a section to read as follows): C110 Venting of Closed Containers**
Sec. L-V 5.37	**Appendix C: Fire Hydrant Location and Distribution (add a section to read as follows): C111 Lakes, Reservoirs, and Ponds**
Sec. L-V 5.38	**Appendix C: Fire Hydrant Location and Distribution (add a section to read as follows): C112 Water Supply Signage**
Sec. L-V 5.39	**Appendix D, Section D101: General (add a paragraph to read as follows)**

Sec. L-V 5.1 Purpose

This Article prescribing regulations governing fire prevention is enacted to provide increased protection from fire to residents and property within Nevada County. It is also intended to encourage a greater degree of uniformity between the local fire districts and outside districts in the imposition of fire safety regulations on new construction and existing buildings, while respecting the autonomy of the local fire protection districts.

Sec. L-V 5.2 Application

Notwithstanding any provision in the California Fire Code to the contrary, if any provisions of the California Fire Code, as amended by this Article, conflict with state law or County ordinances, the provisions of state law or County ordinances shall govern.

Sec. L-V 5.3 Definitions

As used in this Article and the California Fire Code, certain words and phrases are defined and shall be deemed to have the meaning ascribed to them herein.

A. COUNTY FIRE MARSHAL is the person appointed to said position pursuant to Section L-V 5.6, acting directly or through the County Fire Protection Planner.

B. COUNTY FIRE PROTECTION PLANNER is the designee and authorized representative of the County Fire Marshal.

C. FIRE BREAK shall mean a continuous strip of land upon which all rubbish, weeds, grass, or other growth that could be expected to burn when dry, has been abated or otherwise removed in order to prevent the surface extension of fire from one area to another.

Sec. L-V 5.4 Responsibility for Enforcement and Review

Except as otherwise required by controlling State law, enforcement of fire safety laws, standards and regulations and review of projects for compliance therewith shall be as follows in the unincorporated areas of Nevada County:

A. The California Fire Code, as amended and adopted in this Article, shall be enforced:

1. By the Chief of any fire department or the authorized representative thereof within its jurisdiction, and

2. By the County Fire Marshal outside the jurisdiction of a fire department providing fire protection services or within such boundaries as authorized by the Chief.

B. The building standards relating to fire and panic safety adopted by the State Fire Marshal and published in the State Building Standards Code and other regulations formally adopted by the State Fire Marshal for prevention of fire or for protection of life and property against fire or panic shall be enforced against all buildings and uses, including those owned or operated by the State or the County only to the extent State law expressly makes the same applicable and enforceable against such governmental entities:

1. By the State Fire Marshal as to State owned or operated buildings;

2. By the County of Nevada, through its Building Department or its authorized representative, throughout the unincorporated areas of the County:

a. Those standards and regulations more stringent than the requirements published in the California Building Standards Code relating to fire and panic safety adopted pursuant to Health and Safety Code Section 13143.5 or ratified pursuant to Health and Safety Code Section 13869.7 where enforcement is not otherwise delegated upon adoption or ratification, and

b. Those relating to R-3 occupancies, excluding adopted building standards relating to fire and panic safety applicable to Small and Large Day Care Centers, the enforcement of which shall be as provided in subsections B.3 and B.4 hereof;

3. By the Chief of any fire department or their authorized representative within its jurisdiction:

a. Those standards and regulations more stringent than the requirements published in the California Building Standards Code relating to fire and panic safety adopted pursuant to Health and Safety Code Section 13143.5 or ratified pursuant to Health and Safety Code Section 13869.7 where enforcement is delegated to it; and

b. All other standards and regulations, except as provided in subsections B.1, B.2 or B.4 hereof; and

4. By the County Fire Marshal all standards and regulations applicable outside the jurisdictional boundaries of a fire department providing fire protection services or within such boundaries upon request of the Chief or governing body thereof with approval of the State Fire Marshal.

C. Whenever any application is made to the County for issuance of any discretionary land use permit or other land use entitlement, the County Fire Marshal, after consultation with any Fire Chief or other person with enforcement responsibility pursuant to this Article, shall have the final authority and responsibility for review of such application and preparation of comments and appropriate mitigation measures and/or conditions of approval to be requested to assure compliance with all applicable fire safety laws, standards and regulations. To facilitate such review, copies of all such applications shall promptly be provided to the County Fire Marshal and to any Fire Chief or other person with enforcement responsibility.

Sec. L-V 5.5 Duties of County Fire Marshal

A. In addition to enforcement responsibilities provided for in subsections A and B and review responsibilities provided for in Subsection C of Section L-V 5.4 hereof, the duties of the County Fire Marshal shall include fire prevention, code inspection, and fire investigation for the unincorporated

areas of Nevada County outside the jurisdictional boundaries of a fire department or within such boundaries as authorized by the Chief.

B. The County Fire Marshal may designate another qualified person, who shall be known as the County Fire Protection Planner, as his authorized representative to carry out all or any part of his duties under this Section. The appointment of the Fire Protection Planner is subject to ratification by the Board of Supervisors and shall not become effective until said ratification. Any fire department or fire department governing body may, by written request, delegate their authority to the County Fire Protection Planner to review and determine appropriate mitigation measures and/or conditions of approval for any project in its jurisdiction.

Sec. L-V 5.6 Appointment of County Fire Marshal

The Nevada County Board of Supervisors shall appoint the County Fire Marshal. In a timely manner thereafter, the County Fire Marshal shall appoint his or her chief staff officers as Deputy Fire Marshals to operate under the authority of the Nevada County Board of Supervisors. Appointment of Deputy Fire Marshals is subject to ratification by the Board of Supervisors and shall not become effective until said ratification.

Sec. L-V 5.7 Fire Agency Appeals

Appeals from decisions to approve or not to approve permits pursuant to this Article resulting from a dispute as to interpretation of any regulation between the County Fire Marshal or any Fire Chief, or authorized representatives of either, may be taken directly to the Nevada County Building and Accessibility Standards Board of Appeals. Such appeals shall be performed in accordance with Nevada County Land Use and Development Code Chapter V, Section L-V 2.1.

Sec. L-V 5.8 Code Adoption Procedure

A. The County Fire Marshal or his or her designee shall review fire and panic safety regulations adopted by the State pursuant to Health and Safety Code Secs. 13143, et seq. and Public Resources Code Secs. 4290, *et seq.* and shall recommend to the Board of Supervisors for consideration the adoption of amendments and additions to, or deletions from, such regulations.

B. Upon receipt of the County Fire Marshal's report and recommendations, the Board of Supervisors shall set a public hearing to receive public testimony on the proposed changes.

Sec. L-V 5.9 Permits for Burning Operations

Residential open burning, consisting of burning materials originating from one or more single or multiple family dwellings on a premises, including incinerator use, is allowed subject to the provisions of this Code as adopted by Nevada County:

A. Without a permit only during that period when fire danger is determined to be low enough as established from year-to-year by a proclamation of the local California Department of Forestry and Fire Protection (CAL FIRE) Director that burning is not prohibited and burn permits are not needed;

B. With a permit issued by CAL FIRE only during that period between open burn and no-burn periods when conditions are appropriate as established from year-to-year by CAL FIRE or its designated agency by a proclamation that burning is not prohibited, but is allowed subject to a permit.

Notwithstanding the foregoing, there shall be no open burning, and no permits may be issued for burning, on days or at times determined to be unsafe by CAL FIRE, or unhealthy by the Northern Sierra Air Quality Management District (NSAQMD) or for open burning in violation of Section 1102.3.

Sec. L-V 5.10 Incinerators, Open Burning and Commercial Barbecue Pits Additional Enforcement Authorized

The Northern Sierra Air Quality Management District and its duly authorized agents are hereby declared to be code enforcement officers of this County for the purpose and with the right of enforcing the provisions of all subsections of this section, including, without limitation, the same authority as the chief to require discontinuance of burning.

Sec. L-V 5.11 Construction

Freestanding incinerators shall be constructed of bricks, concrete, hollow tile, heavy gauge metal or other approved non-combustible material. Incinerators shall be equipped and maintained with a spark arrest constructed of iron, heavy wire mesh, or other non-combustible material with openings not larger than 1/4-inch.

Sec. L-V 5.12 Fire-Extinguishing Equipment; and Supervision of Incinerator Burning Operations

FIRE-EXTINGUISHING EQUIPMENT. A garden hose connected to an adequate water supply or other approved fire extinguishing equipment shall be available for use when incinerators are in operation.

SUPERVISION OF INCINERATOR BURNING OPERATIONS. When burn permits are required, incinerators, while in use, shall be constantly attended by a person knowledgeable in the use of fire extinguishing equipment required by Sec. L-V 5.12 and familiar with permit limitations that restrict the use of incinerators. An attendant shall supervise the burning material until the fire has been extinguished.

Sec. L-V 5.13 Open Burning

GENERAL. Open burning shall be conducted in accordance with Section 307. Open burning shall also be conducted in accord with requirements of other governing agencies regulating emissions

EXCEPTION: Recreational fires shall be in accordance with California Fire Code Section 307.4.2

NOTIFICATION. Prior to commencement of open burning, the resident must ensure that it is a permissive burn day.

MATERIAL RESTRICTIONS. Material to be burned must be properly dried and all open burning be conducted in a manner to minimize smoke and promote quick and complete combustion. Open burning of rubbish containing paper products is prohibited, as is open burning of garbage generally, cloth, plastics, petroleum products, metal, material soiled by food or fecal matter, animals or animal parts, or any similar smoke producing materials. No person shall use open outdoor fires for the purpose of disposal, processing or burning of any flammable combustible material, including, but not limited to, treated wood, tires, tar, plastics, petroleum wastes, demolition debris, garbage, offal, carcasses of dead animals or salvage of metals. All residential burning of leaves and pine needles shall utilize efficient burn management techniques and in Western Nevada County (as defined in Sec. G-IV 14.A.2 of the Nevada County General Code) shall be restricted to burning where the leaves or pine needles are dry and attached to branches or make up no more than twenty percent (20%) by volume of any burn pile.

TIME AND ATMOSPHERIC RESTRICTIONS. Open burning shall only be performed when time and atmospheric conditions comply with the limits set forth in the open-burning permit or on a permissive burn day as determined by the Northern Sierra Air Quality Management District.

307.4 LOCATION: Open burning shall not be conducted within fifty (50) feet (15.25 meters) of any structure.

EXCEPTION: Clearance from structures is allowed to be reduced as follows:

1. Not less than fifteen (15) feet (4.5 meters) when burning is conducted in an approved burning appliance.
2. Not less than twenty-five (25) feet (7.6 meters) when the pile size is three (3) feet (one (1) meter) or less in diameter and two (2) feet (0.6 meters) or less in height.

FIRE-EXTINGUISHING EQUIPMENT. A garden hose connected to a water supply or other approved fire-extinguishing equipment shall be readily available for use at open-burning sites.

SUPERVISION OF OPEN BURNING OPERATIONS. Burning material shall be constantly attended by an adult person knowledgeable in the use of fire extinguishing equipment required by Section 307.5 and familiar with permit limitations that restrict open burning. An attendant shall supervise the burning material until the fire has been extinguished.

DISCONTINUANCE. The chief or a duly authorized agent of the Northern Sierra Air Quality Management District is authorized to require that open burning be immediately discontinued if the chief or agent determines that smoke emissions are offensive to occupants of surrounding property or if the open burning is determined by the chief or agent to constitute a hazardous condition.

Sec. L-V 5.14 2019 California Code Adopted

Adopt the 2019 California Fire Code as printed by International Code Council Inc. and amended by State Fire Marshal Office and including Appendix Chapters B, BB, C, CC, D, F and H.

Sec. L-V 5.15 California Fire Code, Section 105: Permits (add a subsection to read): 105.8 New Materials, Processes or Occupancies Which May Require Permits

105.8 NEW MATERIALS, PROCESSES, OR OCCUPANCIES THAT MAY REQUIRE PERMITS. The Chief of each local fire protection district shall determine and specify, after giving affected persons the opportunity to be heard, any new materials, processes, or occupancies which shall require permits, in addition to those enumerated in said code.

Sec. L-V 5.16 California Fire Code, Section 105.6: Required Operational Permits (add subsections to read): 105.6.52 Cannabis Operations; 105.6.53 Organized Camps

105.6.52 CANNABIS OPERATIONS. An operational permit is required to operate a commercial cannabis facility or cannabis operation listed below when allowed by State law and the Nevada County Land Use and Development Code:

a) Cultivation
b) Distribution
c) Manufacturing
d) Testing/Laboratories

105.6.53 ORGANIZED CAMPS. An operational permit is required to operate an organized camp.

Sec. L-V 5.17 California Fire Code, Section 110.4: Violation Penalties (amend section to read)

A. 110.4 Violation Penalties. Persons who shall violate a provision of this Code or shall fail to comply with any of the requirements thereof or who shall erect, install, alter, repair or do work in violation of approved construction documents or directive of the fire code official, or of a permit or certificate used under provision of this code, shall be guilty of a misdemeanor, punishable by a fine of not more than one thousand dollars or imprisonment not exceeding 90 days in the County Jail, or both such fine and imprisonment. Each day that a violation continues after due notice has been served shall be deemed a separate offense. The application of the above penalty shall not be the exclusive remedy nor shall the penalty be held to prevent the enforced removal of prohibited conditions.

B. Any person who violates or fails to comply with a notice or order of the County Fire Marshal shall be guilty of a misdemeanor.

Sec. L-V 5.18 California Fire Code, Section 110.4: Violation Penalties (add subsection to read) 110.4.2 Reduction of Penalty

110.4.2 REDUCTION OF PENALTY. The Fire Chief, in their sole discretion, may reduce any violation from a misdemeanor set forth above to an infraction, publishable by a fine or not more than $500.00.

Sec. L-V 5.19 California Fire Code, Section 112.4: Failure to comply (amend section to read)

112.4 FAILURE TO COMPLY. Any person who shall continue work after having been served with the stop work order, except such work as that person is directed to perform to remove a violation or unsafe condition, shall be guilty of an infraction and be liable to a fine of not less than five hundred dollars or more than one thousand dollars for each day the violation continues unabated.

Sec. L-V 5.20 California Fire Code, Section 106.2: Schedule of Permit Fees (amend section to read)

106.2 SCHEDULE OF PERMIT FEES. The Chief of each local fire protection district may charge and receive such fees and charges for services and permits relating to activities of fire prevention pursuant to the Fire Code. Said fees and charges may be set by Resolution of each local fire protection district.

Sec. L-V 5.21 California Fire Code, Section 505: Premises Identification (add a subsection to read): 505.3 Utility Identification

505.3 UTILITY IDENTIFICATION. Gas and electrical meters, services, switches, and shut-off valves in multi-unit commercial and residential buildings shall be clearly and legibly marked to identify the unit or space that it serves.

Sec. L-V 5.22 California Fire Code, Section 506.1: Key Box (add the following text)

A key box, approved by the responsible fire agency, shall be installed in buildings with automatic fire sprinkler and/or fire alarm systems.

The owner or person in charge of the premises shall notify the responsible fire agency without delay when the required keys providing access to the facility have been changed. Proper keys shall be made immediately available.

Sec. L-V 5.23 California Fire Code, Section 604: Electrical Equipment, Wiring and Hazards (add a subsection to read): 604.3.2 Auxiliary Generator Power

604.3.2 AUXILIARY GENERATOR POWER. Any new structure or remodel that has electrical power supplied by a secondary or auxiliary power unit with automatic startup and/or automatic power transfer capabilities shall have an auxiliary power disconnect accessible to fire department personnel. The auxiliary power disconnect switch shall be located within three (3) feet of the main power disconnect switch and identified with a permanently mounted, weatherproof label marked “AUXILIARY POWER DISCONNECT”.

Sec. L-V 5.24 California Fire Code, Section 903.2.8: Group R (add a subsection to read): 903.2.8.5 Manufactured Housing Fire Sprinklers

Fire Sprinklers are required for all manufactured housing or mobile homes as defined by California Health and Safety Code Sections 18007 and 18009 and multifamily homes with two dwelling units defined by California Health and Safety Code Section 18008.7, with a building permit application submittal date on or after January 1, 2020. Fire Sprinklers shall be designed by a licensed professional and installed in accordance with Title 25 of the California Code of Regulations and subject to California Department of Housing and Community Development approval.

Sec. L-V 5.25 California Fire Code, Section 907: Fire Alarm and Detection Systems (add a subsection to read): 907.11 False Alarms

907.11 FALSE ALARMS. When any fire alarm system sounds an audible alarm or transmits an alarm to a remote location causing an emergency response by a fire district, when no emergency exists, for three or more times in any six month period, the owner, tenant, or lessee of the premises may be billed for the cost of the response in accordance with a fee that may be established by Resolution of said Fire District.

Sec. L-V 5.26 California Fire Code, Section 5706.2.4.4: Location Where Above-Ground Tanks are Prohibited (add exceptions)

EXCEPTIONS:

1. Storage in conjunction with construction projects complying with Section 5706.2 of this article for which the Chief has issued a permit.
2. Tanks used for agricultural purposes complying with Section 5706.2. where the need for on-site fuel is necessary for continued operations, and for which a permit has been issued by the Chief.
3. Existing installations where the Chief has issued a permit for continued use.
4. Service stations, repair garages, oil change facilities and commercial operations which accept the return of used crankcase oil, may be permitted to have one aboveground storage tank of up to a five hundred (500) gallon capacity for the purpose of storing used crankcase oil. Section 2311.2

Sec. L-V 5.27 California Fire Code, Section 6103: Installation of Equipment (add a subsection to read): 6103.4 High Elevation Requirements

6103.4 HIGH ELEVATION REQUIREMENTS. Above 4,000 feet elevation above sea level, a site plan that includes a liquefied petroleum gas tank shall be approved by the Fire Marshal of the affected Fire District or Fire Authority before issuance of any building permit therefore.

Sec. L-V 5.28 California Fire Code, Section 6107: Safety Precautions and Devices (add a subsection to read): 6107.5 Protecting Appurtenances from the Elements

6107.5 PROTECTING APPURTENANCES FROM THE ELEMENTS. At above 4,000 feet elevation above sea level, a protective cover shall be installed over all gas meters, regulators, valves, and equipment so to provide protection against sliding, drifting, and impacts of snow and ice. The minimum design for the protective cover shall be equal to, or greater than the Building Design Load determined by the Building Department and shall be securely supported tot eh ground or diagonally to the building wall.

Sec. L-V 5.29 California Fire Code Appendix B, Table B105.2: Required Fire-Flow for Buildings Other Than One-and-Two-Family Dwellings, Group R-3 and R-4 Buildings and Townhouses (amend table to read)

Table B105.2
Required Fire-Flow for Buildings Other Than One-and-Two-Family Dwellings, Group R-3 and R-4 Buildings and Townhouses

AUTOMATIC SPRINKLER SYSTEM (DESIGN STANDARD)	MINIMUM FIRE-FLOW (GALLONS PER MINUTE)	FLOW DURATION (HOURS)
Not automatic sprinkler system	Value to Table B105.1(2)	Duration in Table B105.1(2)
Section 903.3.1.1 of the California Fire Code	50% of the value in Table B105.1(2) a	Duration in Table B105.1(2) at the reduced flow rate
Section 903.3.1.2 of the California Fire Code	50% of the value in Table B105.1(2) b	Duration in Table B105.1(2) at the reduced flow rate

For SI: 1 gallon per minute = 3.785 L/m

a. The reduced fire-flow shall not be less than 1,000 gallons per minute.

b. The reduced fire-flow shall be not less than 1,500 gallons per minute.

Sec. L-V 5.30 Appendix B: Fire-Flow Requirements for Buildings (add a section to read as follows): B107 Automatic Fire Alarm System

B107 AUTOMATIC FIRE ALARM SYSTEM. Any structure with a required fire flow of 1,500 to 1,749 gallons per minute, shall have installed throughout an approved fully-supervised automatic smoke and/or heat detection fire alarm system in the following categories:

1. New buildings;
2. Existing buildings with new construction exceeding 50% of the gross floor area.

EXCEPTIONS:

1. Single-family dwellings and related accessory outbuildings.
2. Buildings that have an automatic fire sprinkler system installed throughout the building.

Sec. L-V 5.31 Appendix B: Fire-Flow Requirements for Buildings (add a section to read as follows): B108 Automatic Fire Sprinkler System

B108 AUTOMATIC FIRE SPRINKLER SYSTEM. Any structure with a required fire flow of 1,750 gallons per minute or more shall have installed throughout, an approved fully-supervised automatic fire sprinkler system in the following categories:

1. New buildings;
2. Existing buildings with new construction exceeding 50% of the gross floor area.

EXCEPTIONS:

1. Single-family dwellings and related accessory outbuildings.

Sec. L-V 5.32 Appendix C: Fire Hydrant Location and Distribution (add a section to read as follows): C106 Location of Dry Hydrants

C106 LOCATION OF DRY HYDRANTS

C106.1 DRY HYDRANT LOCATION. The dry hydrant shall be readily accessible by fire apparatus and shall be located not more than 1,000 feet from the parcel to be served and not less than fifty (50) feet from any structure to be served by the system.

C106.1.1 ADJACENT TO ROADWAY. The dry hydrant shall be located within ten (10) feet of the driveway or other approved access roadway.

C106.1.2 SERVING SINGLE STRUCTURE. If the dry hydrant is located along the driveway serving a single structure, or along the primary access roadway serving multiple structures, the connection shall be located in such a manner that fire apparatus can utilize the hydrant without obstructing the access roadway.

C106.2 TURNOUT CONSTRUCTION. An approved turnout, consisting of a 10-foot wide driving surface for a distance of 25 feet plus a 25-foot taper on either end (total length of 75 feet), shall be provided when the dry hydrant is placed adjacent to a single lane access roadway or where fire apparatus using the hydrant would obstruct the access roadway.

C106.3 VEGETATION CLEARANCE. All flammable vegetation within 10 feet of the dry hydrant shall be removed.

Sec. L-V 5.33 Appendix C: Fire Hydrant Location and Distribution (add a section to read as follows): C107 Installation of Dry Hydrants

C107 INSTALLATION OF DRY HYDRANTS

C107.1 DRY HYDRANT SUPPLY PIPING. Pipe supplying the dry hydrant shall be not less than 4 inches in diameter.

C107.1.1 PVC PIPING. If PVC piping is used, the piping shall be Schedule 40, or better.

C107.2 ULTRAVIOLET PROTECTION. Exposed PVC piping shall be primed and painted with epoxy paint, or otherwise protected from damage that could be caused by exposure to sunlight, in an approved manner.

C107.3 CORROSION PROTECTION. If galvanized steel piping is used, piping that is in contact with the soil shall be wrapped with 2 layers of Mil Tape or otherwise protected from corrosion in an approved manner.

Sec. L-V 5.34 Appendix C: Fire Hydrant Location and Distribution (add a section to read as follows): C108 Dry hydrant connection

C108 DRY HYDRANT CONNECTION

C108.1 SIZE AND THREADS. The connection for the dry hydrant shall consist of a 4-1/2 inch threaded male fitting with National Standard Threads. The connection shall be provided with an approved cap to protect the threads and to protect the water supply from contamination.

C108.2 HEIGHT. The connection for the dry hydrant shall be located between 18 inches and 36 inches above the finished grade.

C108.3 SUPPORT BRACE. If PVC piping is used for the dry hydrant, an approved brace or support shall be provided to support the connection.

Sec. L-V 5.35 Appendix C: Fire Hydrant Location and Distribution (add a section to read as follows): C109 Freeze Protection

C109 FREEZE PROTECTION

C109.1 CONTROL VALVE. If the dry hydrant connection is located lower than the water source, such as a storage tank, an approved valve at the base of the dry hydrant shall be provided to control the water flow.

C109.2 DRAINAGE. Provisions shall be made to drain any standing water from the piping above the valve.

C109.3 EXPOSED PIPING. Any exposed piping that contains water shall be protected from freezing in an approved manner.

Sec. L-V 5.36 Appendix C: Fire Hydrant Location and Distribution (add a section to read as follows): C110 Venting of Closed Containers

C110 VENTING OF CLOSED CONTAINERS

C110.1 TANK VENTING. Closed storage tanks shall be vented in an approved manner.

C110.1.1 SIZE. Vent piping shall be equal to, or larger than, the size of the piping serving the dry hydrant.

C110.1.2 PROTECTION. The vent opening shall be screened with an approved material to prevent obstruction of the vent or contamination of the water supply.

Sec. L-V 5.37 Appendix C: Fire Hydrant Location and Distribution (add a section to read as follows): C111 Lakes, Reservoirs, and Ponds

C111 LAKES, RESERVOIRS, AND PONDS

C111.1 OPEN WATER SOURCES. When the water supply consists of an open water source such as a lake, reservoir, or pond, the following shall apply:

1. If the distance between the water source and the dry hydrant is greater than 100 feet, a minimum 6-inch piping shall be used to supply the dry hydrant.
2. The piping between the base of the dry hydrant and the water source shall be buried at least 3 feet below the finished grade.

3. The end of the piping located in the water source shall be located a minimum of 2 feet above the bottom surface of the water source and a minimum of 2 feet below the lowest recorded level of the top surface of the water source.
4. The end of the piping located in the water source shall be fitted with a commercially manufactured dry hydrant strainer, a hand-made strainer consisting of a capped section of pipe with 1000 holes that are 5/16 inch in diameter drilled along the length, or equal.
5. The distance between the lowest recorded level of the water surface and the connection for the dry hydrant shall not exceed 10 vertical feet.

Sec. L-V 5.38 Appendix C: Fire Hydrant Location and Distribution (add a section to read as follows): C112 Water Supply Signage

C112 WATER SUPPLY SIGNAGE

C112.1 SIGNS. Approved signs indicating the size, location, and access travel route to a fire protection water storage facility shall be provided in such a manner that all pertinent information relating to the facility is clearly identified.

C112.1.1 MOUNTING AND SIZE. All signs shall be mounted on noncombustible posts, shall be a minimum of 18” by 24” in size, and shall be a minimum of 0.080 gauge metal.

C112.1.2 BACKGROUND AND LETTERING. The sign(s) shall have a reflective blue background with a minimum of 3” high reflective lettering that sharply contrasts with the background.

C112.2 FIXED WATER SUPPLY. If the water supply consists of a fixed amount, such as an underground or aboveground storage tank, the sign shall be located on or adjacent to the facility. The sign shall be clearly visible and legible from the access roadway serving the facility. The lettering on the sign shall be arranged as shown in the following example:

6,000 Gallon
Fire Protection
Water Supply

C112.3 ACCESS ROUTE. If the water storage facility consists of a reservoir, pond, or similar facility, at least one sign shall be provided at the intersection of the primary access roadway serving the area and the access roadway serving the water storage facility. This sign shall be located in such a manner that it is clearly visible and legible from the primary access roadway serving the area. Additional signs shall be provided along the access roadway serving the water storage facility if the route of travel is not easily recognized. The lettering on the sign shall be arranged as shown in the following example:

Access to
Fire Protection
Water Supply

Sec. L-V 5.39 Appendix D, Section D101: General (add a paragraph to read as follows)

The Jurisdiction having authority may allow alternative minimum standards as promulgated by the California Public Resources Code 4290.

EXHIBIT A

ARTICLE 6
PERMIT FEES

Section:

Sec. L-V 6.1 Waiver of Fees; Declaration of Emergency

Sec. L-V 6.1 Waiver of Fees; Declaration of Emergency

A. The provisions of this Section shall be retroactive to and effective as of August 8, 1994.

B. Building permit fees shall be waived for the reconstruction of any building or improvement which is damaged or destroyed during a disaster for which the Board of Supervisors adopts a Resolution containing a declaration of emergency. The waiver of the building permit fees shall apply only as to the owner of any property at the time of the disaster. The waiver shall be effective for the rebuilding on the site damaged or destroyed by the disaster or, if the property owner suffering the loss so chooses, at such other site in the unincorporated territory of the County as the property owner selects for the reconstruction of his or her residence.

C. The waiver of fees shall apply only for the original term (life) of the building permit and any renewal or transfer thereof shall be accompanied by the customary fees as established by the County.

D. The waiver of fees shall be allowed only if (1) within one year from the date of the declaration of emergency, the property owner files for a building permit to reconstruct a home or other structure, and (2) executes a certification that the property owner qualifies for a waiver of fees under the provisions of this Section in the form as approved by the County Counsel's Office.

E. As used in this Section, "building permit fees" or "permit fees" include all County assessed fees relating to the reconstruction of a home or other structure including all Planning, Environmental Health, Department of Transportation, Landfill and Building Department fees. "Reconstruction" means the repair or replacement of a damaged or destroyed structure which was originally lawfully erected, not exceeding the total square footage (area) of the previously existing structure and includes, but is not limited to, damage to any electrical, mechanical, sewer or septic system or any similar system. If the property owner requests permits to build a larger home or structure than previously was lawfully erected, the building permit fees and all mitigation and development fees shall be assessed based upon the net increase in gross building area.

F. Except as otherwise provided in this Section, no road development fees, fire mitigation fees, school mitigation fees or any other mitigation fees of any type shall be assessed or collected by the County as a condition to the issuance of any building permit for the reconstruction of any property damaged or destroyed by a disaster for which there has been a declaration of emergency.

G. Whenever a Resolution containing a declaration of emergency is presented to the Board of Supervisors, the County Executive Officer shall include an estimate of the number of structures that were damaged by the disaster. Whenever the Board of Supervisors adopts a declaration of emergency which triggers the waiver of fees in accordance with the provisions of this Section, each fee department shall keep adequate records reflecting the amount of unfunded service that is provided pursuant to the waiver of fees which deficit should be made up by a transfer from the County's contingency fund.

ARTICLE 7
CALIFORNIA PLUMBING CODE AMENDMENTS

Sections:

Sec. L-V 7.0	**Amendments Adopted**
Sec. L-V 7.1	**Appendix Chapters Adopted**
Sec. L-V 7.2	**Division II Administration, Section 104.5 Fees (change to read)**
Sec. L-V 7.3	**Division II Administration, Section 104.3.2 Plan Review Fees (change to read)**
Sec. L-V 7.4	**Division II Administration, Section 104.3.3 Time Limitation of Application (change to read)**
Sec. L-V 7.5	**Division II Administration, Section 104.4.3 Expiration (change to read)**
Sec. L-V 7.6	**Division II Administration, Section 104.5.1 Work Commencing Before Permit Issuance (change to read)**
Sec. L-V 7.7	**Division II Administration, Section 107.0 Board of Appeals (change to read)**
Sec. L-V 7.8	**Section 312.0: Protection of Piping, Materials, and Structures (add text to read)**
Sec. L-V 7.9	**Section 606.0: Valves (add a subsection to read): Section 606.9 Water Supply Valve Freeze Protection**
Sec. L-V 7.10	**Section 609.1: Installation (add text to read)**
Sec. L-V 7.11	**Section 721.0: Location (change to read)**
Sec. L-V 7.12	**Section 906.7: Vent Termination: Frost or Snow Closure (change to read)**
Sec. L-V 7.13	**Section 1212.11 Liquefied Petroleum Gas Facilities and Piping (add the following subsection and text)**

Sec. L-V 7.0 Amendments Adopted

The California Plumbing Code as adopted by Section L-V 1.4 is adopted with the following amendments:

Sec. L-V 7.1 California Plumbing Code

Adopt the following Appendix Chapters from the 2019 California Plumbing Code: Appendix A, B, D, G and I.

Sec. L-V 7.2 Division II Administration Section 104.5: Fees (change to read)

Fees shall be as set forth in the fee schedule adopted by Resolution of the Nevada County Board of Supervisors.

Sec. L-V 7.3 Division II Administration Section 104.3.2: Plan Review Fees (change to read)

Plan review fees shall be as set forth in the fee schedule adopted by Resolution of the Nevada County Board of Supervisors.

Sec. L-V 7.4 Division II Administration, Section 104.3.3 Time Limitation of Application (change to read)

Refer to L-V 2.6, Section 105.3.2.

Sec. L-V 7.5 Division II Administration, Section 104.4.3 Expiration (change to read)

Refer to L-V 2.7, Section 105.5.

Sec. L-V 7.6 Division II Administration, Section 104.5.1 Work Commencing Before Permit Issuance (change to read)

Refer to L-V 2.9, Section 109.4.

Sec. L-V 7.7 Division II Administration, Section 107.0 Board of Appeals (change to read)

Refer to L-V 2.1, Section 113.

Sec. L-V 7.8 Section 312.0: Protection of Piping, Materials, and Structures (add text to read)

Above 4,000 feet elevation above sea level, when structural conditions necessitate installation of water piping in exterior walls or above ceilings of buildings, the pipes shall be installed to the inside edge of the wall or ceiling framing and insulated, on the unheated side of the pipes, with at least R-19 insulation or equivalent.

Above 4,000 feet elevation above sea level all cold water piping shall be graded back to the water service. Hot water lines shall be sloped to a bleeder valve or valves that are readily accessible. Gravity drains or other approved devices may be used to satisfy this requirement. No part of such water lines shall be trapped.

Sec. L-V 7.9 Section 606.0: Valves (add a subsection to read): Section 605.9 Water Supply Valve Freeze Protection

Section 605.9 WATER SUPPLY VALVE FREEZE PROTECTION. Above 4,000 feet elevation above sea level the building water service line shall be equipped with a "stop and drain" valve located where the line daylights out of the ground within the building footprint. The drain port of the valve shall be protected from blockage by the use of a sleeve or box over the valve. The valve shall be protected from freezing with insulation material and fitted with a handle that is readily accessible.

Sec. L-V 7.10 Section 609.1: Installation (add text to read)

Above 4,000 feet elevation above sea level water supply yard piping shall be protected from freezing by a minimum of 36 inches of earth covering and shall be extended to within the building footprint before daylighting out of the ground.

Sec. L-V 7.11 Section 721.0: Location (change to read)

A. No building sewer or private sewage disposal system or part thereof shall be located in any lot other than the lot which is the site of the building or structure served by such sewer or private sewage disposal system or part thereof; nor shall any building sewer or private sewage disposal system or part thereof be located at any point having less than the minimum distances indicated in Table 721.1, except as provided in subsection B and C of this Section.

B. Nothing contained in this code shall be construed to prohibit the use of all or part of an abutting or a separate lot to:

1. Provide access to connect a building sewer to an available public sewer when proper cause and legal easement not in violation of other requirements has first been established to the satisfaction of the County Environmental Health Department.

2. Provide additional space for a building sewer or a private sewage disposal system or part thereof, when proper cause and transfer of ownership, or change of boundary, or legal easement not in violation of other requirements has first been established to the satisfaction of the County. The instrument recording such action shall constitute an agreement with the County which shall clearly state and show that the areas so joined or used shall be maintained as a unit during the time they are so used. Such an agreement shall be recorded in the office of the County Recorder as part of the conditions of ownership and use of said properties and shall be binding on all heirs, successors, and assigns of such properties. A copy of the instrument recording such proceedings shall be filed with the County Environmental Health Department.

C. Nothing contained herein shall be construed to prohibit a private sewer line from crossing a public street providing, however, that such use of the public street shall be authorized by an encroachment permit which shall expressly state thereon that it is subject to revocation by the County by giving five (5) days advance notice, and thereafter the encroachment shall be removed and the use of the property shall cease unless sewage disposal is authorized in some other manner as approved by law. Any such encroachment permit shall be recorded with the County Recorder as part of the agreement required hereinabove.

D. Use of an unabutting lot for a private sewage disposal system may be allowed by the County Environmental Health Department only if all of the following conditions exist:

1. Testing and observation as required by Chapter VI of the Nevada County Land Use and Development Code clearly reveal that the lot(s) from which sewage will be generated does not meet the standards for conventional, special design or alternative/advanced wastewater disposal as defined therein; and
2. The applicant can demonstrate to the County Environmental Health Department that said lot would be unbuildable without utilization of an unabutting lot for sewage disposal; and
3. Only one (1) public or private street, highway or right-of-way is to be crossed by the sewer line from the subject lot; and
4. Only one (1) unabutting lot is to be crossed by the sewer line from the subject lot; and
5. The building or site to be served is no more than five hundred (500) feet from the unabutting lot where sewage disposal is proposed; and
6. Compliance with Article 3, Chapter VI of the Nevada County Land Use and Development Code is ascertained, if appropriate; and
7. The parcels under consideration were created prior to the effective date of 11/05/96.

E. Lots where sewage is to be generated and/or where sewage disposal is proposed that abut to each other or each to another shall be exempt from the requirements in subsection C above provided the proposed sewage collection, treatment and disposal system meets all other requirements of Chapter VI of the Nevada County Land Use and Development Code and the California Plumbing Code.

Sec. L-V 7.12 Section 906.7: Vent Termination: Frost or Snow Closure (change to read)

Above 4,000 feet elevation above sea level all vent terminals shall be protected from closure and sliding snow and ice by the use of formed metal crickets. The metal crickets shall have a minimum vertical height (at the apex) at least one-half of the required vertical height of the vent extension above the roof. In no case shall the cricket measure less than 8 inches at the apex. The cricket and flashing shall be secured to the roof framing and sheathing to withstand the shear loads anticipated. Combined flashing and cricket units may be used. Vent pipes shall extend through their flashings and be tightly sealed at the point of penetration so as to prevent the return of sewer gases into the structure.

EXCEPTION: Vent terminals which are made within 36 inches of the ridge or on roofs having a pitch of 2 in 12 or flatter shall not be required to have crickets.

Sec. L-V 7.13 Section 1212.11 Liquefied Petroleum Gas Facilities and Piping (add the following subsection and text)

The subsection shall apply to all new liquefied petroleum gas (LPG) installations and to existing installations when LPG service is reconnected after service is interrupted that are above 4,000 foot elevation.

A. Two stage regulator/systems shall be installed on all LPG installations with approved steel or PE piping, installed in accordance with the California Plumbing Code and manufactures installation instructions and specifications.

B. The first stage regulator shall be installed under the hinged gauge cover supplied with the tank. The atmospheric pressure aperture of the regulator shall be pointed downward. The first stage regulator shall be plumbed to the riser of the yard piping with soft copper tubing or schedule 40 steel pipe with two 90 degree elbow swing joints (one at the top and one below grade) to allow flexibility should tank shifting occur. The riser from the yard piping shall be located not more than three (3) inches (horizontally) from the walls of the tank. The propane tank shall be placed on reinforced concrete supports and securely attached thereto.

C. The second stage regulator and riser pipe shall be installed on the gable end of the building at least 20 feet from or out of the direct line of discharge of adjacent shedding roofs. The riser shall have swing joints below grade and be 1.5 - 3.5 inches from the wall surface and securely supported/braced to the wall approximately ten inches below the regulator so as to prevent bending of the pipe by lateral snow/ice loads. Second stage regulators installed on the front of a garage shall be protected by a bollard in conformance with the California Fire Code.

Exception 1: On round, octagon or similarly-shaped structures (without gable ends) the riser may be located under the eaves when approved by the Building Official.

Exception 2: On existing services that are reconnected after service is interrupted, where relocation of the riser is not possible due to structural or topographical constraints the riser may be located under the eave with the approval of the Building Official.

D. A protective cover, engineered for the snow load of the area, shall be installed over the second stage regulator and securely supported to the ground or diagonally to the building wall. When supported to the ground, the footing for the supports shall be founded 18 inches below finished grade and the supporting posts shall be securely fastened to the footing and the cover to prevent dislocation of the supports. When supported diagonally to the wall, the supports shall extend from the drip edge of the cover back to the wall. The angle formed by the supports and the wall shall not exceed 45 degrees from vertical. Existing decks that are used to cover the second stage regulator shall be designed for the snow load.

E. The riser pipes for the yard piping shall not be imbedded in concrete. Concrete placed around such riser shall be held back at least one (1) inch from all sides of the pipe.

F. Location of the shutoff valve at the LPG tank shall be permanently marked by the use of a color-coded snow stake identifying the gas supplier. This stake shall be placed direction adjacent to the tank at the center line of the valve cover and on all sides opposite the yard piping riser. Such stake shall be sufficient height to be visible through anticipated maximum snow depth at the respective location. Installation and maintenance of this snow stake in the responsibility of the LPG user. An LPG shutoff valve shall also be installed at the house under the regulator cover. This valve shall be identified by a placard on the wall directly over the regulator cover and above the anticipated depth of snow.

EXHIBIT A

ARTICLE 8
CALIFORNIA MECHANICAL CODE AMENDMENTS

Sections:

Sec. L-V 8.0	**Amendments Adopted**
Sec. L-V 8.1	**Appendix Chapters Adopted**
Sec. L-V 8.2	**Division II Administration, Section 107.0: Board of Appeals, General (change to read)**
Sec. L-V 8.3	**Division II Administration Section 104.5: Fees (change to read)**
Sec. L-V 8.4	**Division II Administration Section 104.3.2: Plan Review Fees (change to read)**
Sec. L-V 8.5	**Division II Administration, Section 104.3.3 Time Limitation of Application (change to read)**
Sec. L-V 8.6	**Division II Administration, Section 104.4.3 Expiration (change to read)**
Sec. L-V 8.7	**Division II Administration, Section 104.5.1 Work Commencing Before Permit Issuance (change to read)**
Sec. L-V 8.8	**Section 303.7: Liquefied Petroleum Gas Facilities, Section 303.7.2 Liquefied Petroleum Gas Appliances: (add the following text)**
Sec. L-V 8.9	**Section 802.2.6: Direct Vent Appliances: (add the following text)**
Sec. L-V 8.10	**Section 802.3.3.5 Exit Terminals (add the following)**
Sec. L-V 8.11	**Section 802.6.1 Gas Vents, Termination Requirements: (add the following text)**

Sec. L-V 8.0 Amendments Adopted

The California Mechanical Code as adopted by Section L-V 1.4 is adopted with the following amendments:

Sec. L-V 8.1 California Mechanical Code

Adopt the following Appendix Chapters from the 2019 California Mechanical Code): Appendix B and Appendix C.

Sec. L-V 8.2 Division II Administration Section: 107.0 Board of Appeals, General (change to read)

Appeals resulting from decisions or determinations made by the Building Official relative to the application and interpretation of this code shall be heard by the Building and Accessibility Standards Board of Appeals as set forth in Section L-V 2.1 of the Nevada County Land Use and Development Code.

Sec. L-V 8.3 Division II Administration Section 104.5: Fees (change to read)

Fees shall be as set forth in the fee schedule adopted by Resolution of the Nevada County Board of Supervisors.

Sec. L-V 8.4 Division II Administration Section 104.3.2: Plan Review Fees (change to read)

Plan review fees shall be as set forth in the fee schedule adopted by Resolution of the Nevada County Board of Supervisors.

Sec. L-V 8.5 Division II Administration, Section 104.3.3 Time Limitation of Application (change to read)

Refer to L-V 2.6, Section 105.3.2.

Sec. L-V 8.6 Division II Administration, Section 104.4.3 Expiration (change to read)

Refer to L-V 2.7, Section 105.5.

Sec. L-V 8.7 Division II Administration, Section 104.5.1 Work Commencing Before Permit Issuance (change to read)

Refer to L-V 2.9, Section 109.4.

Sec. L-V 8.8 Section 303.7: Liquefied Petroleum Gas Facilities (add the following text): Section 303.7.2 Liquefied Petroleum Gas Appliances

A 3-inch gravity drain shall be provided at the low point of the space, installed so as to provide 1/4-inch per foot grade and terminate at an exterior point of the building protected from blockage. The opening shall be screened with a corrosion-resistant wire mesh with mesh openings of 1/4-inch in dimension. Lengths of the gravity drains over 10 feet in length shall be first approved by the Building Official.

Sec. L-V 8.9 Section 802.2.6: Direct-Vent Appliances (add the following)

Vent terminals of direct-vent appliances shall terminate above the anticipated snow depth.

Direct vent appliance terminations shall not be located under decks which could be sealed off around the perimeter with snow accumulation.

Above 4,000 feet elevation above sea level all direct vent terminations shall be protected from closure and sliding snow and ice by the use of formed metal crickets. The metal crickets shall have a minimum vertical height (at the apex) at least one-half of the required vertical height of the vent extension above the roof. In no case shall the cricket measure less than 8 inches at the apex. The cricket and flashing shall be secured to the roof framing and sheathing to withstand the shear loads anticipated. Combined flashing and cricket units may be used. Vent pipes shall extend through their flashings and be tightly sealed at the point of penetration so as to prevent the return of sewer gases into the structure. All appliance vents, flues and chimneys shall be strapped to the cricket near its apex with a galvanized steel strap with a minimum thickness of 16 gauge.

EXCEPTION: Vent terminations which are made within 36 inches of the ridge or on roofs having a pitch of 2 in 12 or flatter shall not be required to have crickets.

Sec. L-V 8.10 Section 802.3.3.5 Exit Terminals (add the following)

Exit terminals and combustion air intakes shall not be located under decks which could be sealed off around the perimeter with snow accumulation.

Above 4,000 feet elevation above sea level all vent exit terminals shall be protected from closure and sliding snow and ice by the use of formed metal crickets. The metal crickets shall have a minimum vertical height (at the apex) at least one-half of the required vertical height of the vent extension above the roof. In no case shall the cricket measure less than 8 inches at the apex. The cricket and flashing shall be secured to the roof framing and sheathing to withstand the shear loads anticipated. Combined flashing and cricket units may be used. Vent pipes shall extend through their flashings and be tightly sealed at the point of penetration so as to prevent the return of sewer gases into the structure. All appliance vents, flues and chimneys shall be strapped to the cricket near its apex with a galvanized steel strap with a minimum thickness of 16 gauge.

EXCEPTION: Exit terminals which are made within 36 inches of the ridge or on roofs having a pitch of 2 in 12 or flatter shall not be required to have crickets.

Sec. L-V 8.11 Section 802.6.1 Gas Vents, Termination Requirements: (add the following)

EXHIBIT A

Gas Vents shall terminate above the anticipated snow depth.

Gas vent terminations shall not be located under decks which could be sealed off around the perimeter with snow accumulation.

Above 4,000 feet elevation above sea level all gas vent terminations shall be protected from closure and sliding snow and ice by the use of formed metal crickets. The metal crickets shall have a minimum vertical height (at the apex) at least one-half of the required vertical height of the vent extension above the roof. In no case shall the cricket measure less than 8 inches at the apex. The cricket and flashing shall be secured to the roof framing and sheathing to withstand the shear loads anticipated. Combined flashing and cricket units may be used. Vent pipes shall extend through their flashings and be tightly sealed at the point of penetration so as to prevent the return of sewer gases into the structure. All appliance vents, flues and chimneys shall be strapped to the cricket near its apex with a galvanized steel strap with a minimum thickness of 16 gauge.

EXCEPTION: Gas vent terminations which are made within 36 inches of the ridge or on roofs having a pitch of 2 in 12 or flatter shall not be required to have crickets.

Article 9
International Swimming Pool and Spa Code Amendments

Sections:

Sec. L-V 9.0	**Amendments Adopted**
Sec. L-V 9.1	**Division II Administration, Section 105.4 Time Limitation of Application (change to read)**
Sec. L-V 9.2	**Division II Administration, Section 105.5.3 Expiration (change to read)**
Sec. L-V 9.3	**Division II Administration, Section 105.6.1 Work Commencing Before Permit Issuance (change to read)**
Sec. L-V 9.4	**Section 105.6 Fees & Section 105.6.2 Fee Schedule: (change to read)**
Sec. L-V 9.5	**Section 108 Means of Appeal: (change to read)**

Sec. L-V 9.0 Amendments Adopted

The International Swimming Pool and Spa Code as adopted by Section L-V 1.4 is adopted with the following amendments:

Sec. L-V 9.1 Division II Administration, Section 105.4 Time Limitation of Application (change to read)

Refer to L-V 2.6, Section 105.3.2.

Sec. L-V 9.2 Division II Administration, Section 105.5.3 Expiration (change to read)

Refer to L-V 2.7, Section 105.5.

Sec. L-V 9.3 Division II Administration, Section 105.6.1 Work Commencing Before Permit Issuance (change to read)

Refer to L-V 2.9, Section 109.4.

Sec. L-V 9.4 Section 105.6 Fees & Section 105.6.2 Fee Schedule: (change to read)

Permit and plan review fees shall be as set forth in the fee schedule adopted by Resolution of the Nevada County Board of Supervisors.

Sec. L-V 9.5 Section 108 Means of Appeal: (change to read)

Appeals resulting from decisions or determinations made by the Building Official relative to the application and interpretation of this Code shall be heard by the Building and Accessibility Standards Board of Appeals as set forth in Section L-V 2.1 of the Nevada County Land Use and Development Code.

EXHIBIT A

ARTICLE 10
REPEALED

EXHIBIT A

Article 11
Landform Grading for Agriculture

Sections:

Sec. L-V 11.1 Intent
Sec. L-V 11.2 Applicability
Sec. L-V 11.3 Criteria
Sec. L-V 11.4 Procedure
Sec. L-V 11.5 Fees
Sec. L-V 11.6 Appeals

Sec. L-V 11.1 Intent

In adopting this Article, it is the intent of the Board of Supervisors to adopt, in addition to the exemption for cultivation of land to raise crops, a more comprehensive exemption from grading permit requirements for other clearing and grading of land for agricultural operations, subject to criteria and procedures to avoid abuse. The purpose of this Article is to promote long-term viable agricultural use of agricultural lands while protecting natural resources and to provide reasonable minimum standards that will prevent man-induced land failures while controlling erosion, drainage and sediment discharge.

Sec. L-V 11.2 Applicability

Clearing and grading of land for agricultural operations may be exempted from grading permit requirements by the Building Department upon verification that a bona fide agricultural project is involved and a permit exemption has been recommended by the Agricultural Commissioner. An exemption under this section shall only be approved upon: 1) written verification by the landowner, which shall be deemed to be binding upon the landowner and any successors in interest; and 2) the permit-exempted lands shall be used for agricultural operations for a period of at least five (5) years following the granting of the exemption, provided all of the criteria established in this Article are met and there is full compliance with all of the procedures set forth in this Article 10.

Sec. L-V 11.3 Criteria

To qualify as other clearing and grading of land for agricultural operations that may be exempted from grading permit requirements pursuant to this Article, all of the following criteria must be met:

1. The land to be cleared and/or graded is zoned for agricultural use as:
    a. “AG” (General Agriculture), or
    b. “AE” (Agricultural Exclusive), or
    c. “RA” (Residential Agriculture) where the parcel is 3 acres or more in size and the General Plan designation is Rural;
2. The clearing and/or grading is exclusively for agricultural purposes not associated with buildings that require a building permit;
3. Any vegetation removal or soil disturbance is outside any floodplain, watercourse, wetland or riparian area and any non-disturbance buffer for those areas as defined in Section L-II 4.3;
4. The work occurs on slopes of thirty percent (30%) or less;
5. The work does not disturb cultural resources;
6. Any excavated material remains on site, without changing the natural terrain or drainage and without creating any cuts or fills, except as follows:
    a. The work, if associated with construction or maintenance of a pond for livestock raised on site, aquaculture or irrigation, does not create a dam that exceeds two feet in height above grade, an excavation in excess of six feet or a storage capacity of more than ten acre feet

and results in no adverse hydrological impacts upon surrounding properties that are not mitigated to a level of insignificance, or

b. The work, if associated with construction of a farm or ranch road, is solely for the purpose of providing on-site access to water supplies, storage areas, grazing/crop lands or fence lines, does not service a structure requiring a building permit, and does not create a cut or fill greater than two feet in height;

7. Projects potentially impacting heritage oak groves or trees, as defined in LUDC Section L-II 4.3.15.B and verified by a field inspection conducted by the Agricultural Commissioner or his/her agent, shall provide a management plan as defined in LUDC Section L-II 4.3.3.C Resource Standards. A Management Plan to mitigate the impacts of the proposed project on landmark trees or groves shall be required." An Agricultural Grading Exemption shall be denied to parcels or sites where these resources exist, and no mitigation and/or avoidance is available through the Management Plan process.

8. To the extent possible, all work will be conducted between April 15th and October 15th to avoid the rainy season. Any work before April 15th or after October 15th of any year shall be permitted only if disclosed in the application and approved in the Permit Exemption. To secure such approval, the applicant shall submit an erosion and sediment control plan, including an effective re-vegetation program to stabilize all disturbed areas, expressly approved in writing by a State Certified Professional Erosion and Sediment Control (CPESC). If grading occurs, or if the land is left open and unplanted during the period from October 15th to April 15th, all projects over 2,500 square feet on slopes over 15% in areas of moderate to high erosion potential as defined by the Soil Survey of Nevada County, shall have an Erosion and Sediment Control Plan expressly approved in writing by the State Certified Professional Erosion and Sediment Control (CPESC) and shall be implemented after October 15th, and maintained through April 15th.

9. Projects shall be in compliance with the RWQCB regarding Clean Water Act requirements, and all other applicable laws.

10. The following conditions of approval shall be applied to all projects approved through this agricultural grading exemption:

    a. The applicant shall be responsible for ensuring that all adequate dust control measures are implemented in a timely manner during all phases of the proposed project.

    b. Fugitive dust emissions resulting from site clearing shall be minimized at all times, utilizing control measures including dust palliatives, regularly applied water, graveled or paved roads, etc. Control measures shall be noted on grading plans.

    c. All land clearing, grading, earth moving, or excavation activities on a project shall be suspended to prevent excessive windblown dust when winds are expected to exceed 20 mph.

11. Verification of NSAQMD clearance shall be filed with the Agricultural Commissioner prior to any surface disturbance (including clearing and grubbing) associated with agricultural (or other) road construction in any of the sections listed in the table. Mapping of areas of ultramafic rock/serpentine occurrence within the project area shall be on file at the Agricultural Commissioner's office. In addition, if naturally occurring ultramafic rock/serpentine is discovered once grading for a road commences, the NSAQMD must be notified no later than the next business day and requirements in CCR, Title 17, Section 93105 must be implemented within 24 hours.

EXHIBIT A

Sections Mapped as Containing Ultramafic Rock/Serpentine in Nevada County

Range _ East	Township _ North	Sections
6	14	23, 25, 26
7	14	1, 12, 13
8	14	4, 5, 6, 7, 8, 9, 16, 17, 18, 20, 21, 28, 29, 32
	15	29, 32, 33
	16	4, 5, 8, 9, 10, 11, 14, 15, 16, 21, 22, 23, 24, 25, 26, 27
	17	29, 30, 31, 32
9	16	19, 30, 31
	18	13, 24
10	16	13, 24
	17	1, 2, 11, 12, 13, 14, 16, 17, 23, 24
	18	9, 10, 11, 12, 13, 14, 15, 16, 17, 18, 24, 25, 26, 35, 36
11	16	5, 6, 7, 8, 17, 18, 19
	17	18, 19, 32
12	17	24, 25
13	17	19, 30

Sec. L-V 11.4 Procedure

A. Exceptions pursuant to this Article must be applied for and a permit exemption may be granted hereunder only if each of the following procedures is fully complied with and completed in the order specified:

1. The applicant obtains, completes and submits to the Agriculture Commissioner:

   a. an “Agricultural Clearing/Grading Permit Exemption Form” provided by the Building Department;

   b. an Agricultural Project Plan acceptable in form and content to the Agricultural Commissioner; and

   c. a binding commitment of five (5) years to continue use of the permit-exempted lands for agricultural operations acceptable in form and content to County Counsel.

2. The Agriculture Commissioner reviews the submitted “Agricultural Clearing/Grading Permit Exemption Form and Agricultural Project Plan and, based upon field verification of the information therein, determines that the clearing or grading proposed is for a bona fide agricultural project and recommends approval of the requested exemption to the Building Department.

3. The Agricultural Commissioner shall review applications for positive occurrence of rare or threatened species. Applications within proximity to endangered, rare or threatened species as shown on the California Natural Diversity Database (CNDDB) shall provide biologists report to verify if occurrence or absence of resource. Applications with State or Federally listed species shall require permit through jurisdictional agency (USFWS or CDFG) prior to issuance of an exemption.

4. To verify potential riparian resources for applicants for the agricultural grading exemption, all applications submitted to the Agricultural Commissioner shall include a mapping of the parcel or parcels for which the application is made, a map showing all Lakes, Rivers, FEMA Flood Zone on a background map of the USGS topographic maps, as provided by the County of Nevada GIS system public mapping resources. Mapping shall be verified during field inspection by staff biologist for other wetland habitats.

5. The Building Department reviews the application and considers the recommendation of the Agriculture Commissioner, determines that the proposed project meets all of the criteria and satisfies all of the procedures required for exemption, and approves the exemption request, notifying the applicant in writing of a favorable decision.

6. Notification of granting of the Agricultural Grading Exemption by the Building Department shall include the following statement: "Any person involved in any form of ground

disturbance is advised of the remote possibility of encountering subsurface cultural or historic resources. If such resources are encountered or suspected, all subsurface work within 200 feet of the potential cultural or historic discovery shall be halted immediately, and the Planning Department and a professional archaeologist shall be consulted who shall access any discoveries and develop appropriate management recommendations for archaeological resource treatment. If bones are found and appear to be human, California Law requires that the Nevada County Coroner and the Native American Heritage Commission be contacted. If Native American resources are involved, Native American Organizations and individuals recognized by the County shall be notified and consulted about any plans for treatment."

B. Applications shall be processed by the Agriculture Commissioner within thirty (30) days of receipt of a complete application and by the Building Department within thirty (30) days of submittal to it of the approval by the Agriculture Commissioner.

C. Any clearing or grading work done pursuant to a Permit Exemption shall be subject to a site inspection upon completion of the work or prior to October 15th of each year, whichever first occurs, by a CPESC to determine compliance with the project plan and erosion control and stabilization of the site.

D. Permit Exemptions may be issued for up to two (2) years.

E. If it is determined during the term of the Permit Exemption that the actual clearing or grading is not for agricultural purposes as represented to and approved by the Agriculture Commissioner, all further work shall cease, the site shall be stabilized and revegetated in accord with recommendations of a CPESC, and a grading permit shall be required for any further work, provided, however that a grading permit shall not be granted earlier than five (5) years from the date of application for the exemption.

F. In the event that work is done on property pursuant to a Permit Exemption that is determined to be subject to the requirements of subsection E and application is made within the five (5)-year period during which no grading permit can be granted for any development or project unrelated to agricultural operations or involving construction of a structure or structures for which a building permit is required, it may be required as a condition of approval that the site be restored to its original condition prior to such clearing or grading to the extent feasible, and to the extent full restoration is not possible, mitigation measures shall be imposed to remediate any damage caused.

Sec. L-V 11.5 Fees

The costs of providing the services of the Building Department, Agriculture Commissioner and CPESC required by this Article shall be paid by the applicant for an exception to the grading permit requirement. Permit and plan review fees shall be as set forth in the fee schedule adopted by Resolution of the Nevada County Board of Supervisors.

Sec. L-V 11.6 Appeals

Appeals from discretionary orders, decisions or determinations pursuant to this Article shall be heard by the Building and Accessibility Standards Board of Appeals established pursuant to Section L-V 2.1 of the Nevada County Land Use and Development Code.

EXHIBIT A

Article 12
California Electrical Code

Sec. L-V 12.0 **Amendments Adopted**
Sec. L-V 12.1 **Annex "H" (Adopted)**
Sec. L-V 12.2 **Annex "H", Section 80.15, A-H: Electrical Board (changed to read)**
Sec. L-V 12.3 **Annex "H", Section 80.19, E: Fees (changed to read)**
Sec. L-V 12.4 **Annex "H", Section 80.23 (B)(3): Notice of Violations, Penalties (changed to read)**
Sec. L-V 12.5 **Annex "H", Section 80.27, A-D: Inspector's Qualifications (changed to read)**

Sec. L-V 12.0 Amendments Adopted

The California Electrical Code as adopted by Section L-V 1.4 is adopted with the following amendments:

Sec. L-V 12.1 California Electrical Code Adopted

Adopt the following Annex Chapters from the 2019 California Electrical Code): Annex "H"

Sec L-V 12.2 Annex "H", Administration Section 80.15 A-H: Electrical Board (change to read)

Appeals resulting from decisions or determinations made by the Building Official relative to the application and interpretation of this Code shall be heard by the Building and Accessibility Standards Board of Appeals as set forth in Section L-V 2.1 of the Nevada County Land Use and Development Code.

Sec. L-V 12.3 Annex "H", Section 80.19, E: Fees (changed to read)

Permit and plan review fees shall be as set forth in the fee schedule adopted by Resolution of the Nevada County Board of Supervisors.

Sec. L-V 12.4 Annex "H" Administration Section 80.23 (B)(3): Notice of Violation, Penalties (change to read)

CRIMINAL ENFORCEMENT. Any person who violates any provision of this Chapter shall be guilty of a misdemeanor and, upon conviction thereof, shall be subject to mandatory fines of one hundred dollars ($100) for a first violation; five hundred dollars ($500) for a second violation within a twelve-month period; and one thousand dollars ($1,000) for a third or subsequent violation within a twelve month period. Every day any violation continues shall constitute a separate offense punishable by a separate fine.

Sec. L-V 12.5 Annex "H", Section 80.27, A-D: Inspector's Qualifications (changed to read)

Inspectors shall retain certifications as required in their job classification as adopted by the County of Nevada based on the job classification they are appointed.

EXHIBIT A

Article 13
Grading

Sections:

Sec. L-V 13.1 Purpose
Sec. L-V 13.2 Scope
Sec. L-V 13.3 Permits Required
Sec L-V 13.4 Hazards
Sec L-V 13.5 Definitions
Sec L-V 13.6 Grading Permit Requirements
Sec L-V 13.7 Grading Fees
Sec L-V 13.8 Bonds
Sec L-V 13.9 Cuts
Sec L-V 13.10 Fills
Sec L-V 13.11 Setbacks
Sec L-V 13.12 Drainage and Terracing
Sec L-V 13.13 Road and Driveway Standards
Sec L-V 13.14 Erosion Control
Sec L-V 13.15 Grading Inspection
Sec L-V 13.16 Completion of Work

Sec. L-V 13.1 Purpose

The purpose of this article is to safeguard life, limb, property and the public welfare by regulating grading and construction activities that result in a land disturbance on private property.

Sec. L-V 13.2 Scope

A. This Article sets forth rules and regulations to control excavation, grading and earthwork construction, including fills and embankments; establishes standards of required performance in preventing or minimizing water quality impacts from storm water runoff; establishes the administrative procedure for issuance of permits; and provides for approval of plans and inspection of grading construction, drainage, and erosion and sediment controls at construction sites.

Vehicular ways shall conform to the grading requirements of this Chapter.

B. The standards listed below are recognized standard:

1. Testing.
   a. ASTM D 1557, Moisture-Density Relations of Soils and Soil Aggregate Mixtures
   b. ASTM D 1556, In Place Density of Soils by the Sand-Cone Method
   c. ASTM D 2167, In Place Density of Soils by the Rubber-Balloon Method
   d. ASTM D 2937, In Place Density of Soils by the Drive-Cylinder Method
   e. ASTM D 6938, In Place Moisture Contact and Density of Soils by Nuclear Methods

Sec. L-V 13.3 Permits Required

A. Except as specified in Sec. L-V 13.3(B) of this section, no person shall do any grading without first having obtained a grading permit from the Building Official.

1. No drainage culvert, piping, V-ditch or energy dissipater shall be installed, replaced, altered or repaired without first obtaining a permit from the Building Official.
2. No pond shall be installed, repaired or altered without first obtaining a permit from the Building Official.

EXCEPTION: Performance of emergency work necessary to protect life or property when an urgent necessity therefore arises. The person performing such emergency work shall notify the Building Official promptly of the problem and work required and shall apply for a permit therefore within ten (10) calendar days after commencing said work.

B. Except in flood plains as regulated in section L-II 4.3.10 of the Land Use and Development Code, a grading permit is not required for the following, provided no unstable or erodible slopes are created and no encroachment onto sewage disposal systems, water supply systems or hazardous material sites, areas or setbacks is created.
NOTE: Owners/operators of sites may still need NPDES storm water permit coverage with the State if the construction activity is part of a larger common plan of development or sale that would result in a land disturbance of greater than or equal to one acre.

1. When approved by the Building Official, grading which does not exceed 250 cubic yards in an isolated, self-contained area, with cuts, fills and erosion control conforming to the requirements of this Article, provided there is no danger to private or public property, it does not pose a significant erosion or sediment discharge hazard and is not intended to support a building or structure on fill.
2. An excavation below finished grade for basements and footings of a building, retaining wall or other structure authorized by a valid building permit. This shall not exempt any fill made with the material from such excavation or exempt any excavation having an unsupported height greater than 5 feet (1524, mm) after the completion of such structure.
3. Cemetery graves.
4. Refuse disposal sites controlled by other regulations.
5. Excavations for wells or tunnels or utilities.
6. Mining, quarrying, excavating, processing or stockpiling of rock, sand, gravel, aggregate or clay where established and provided for by law, provided such operations do not affect the lateral support or increase the stresses in or pressure upon any adjacent or contiguous property.
7. Exploratory excavations under the direction of soil engineers, engineering geologists, or registered environmental health specialists limited to sewage disposal systems. Such work shall be backfilled and shaped to the original contour of the land after the investigation.
8. An excavation that is less than 2 feet (610 mm) in depth, does not create a cut slope greater than 5 feet (1524, mm) in height and steeper than 1 unit vertical in 1 1/2 units horizontal (66.7% slope) and does not exceed 50 cubic yards.
9. A fill less than 1 foot (305 mm) in depth and placed on natural terrain with a slope flatter than 1 unit vertical in 5 units horizontal (20% slope), or less than 3 feet (914 mm) in depth, not intended to support structures, that does not exceed 50 cubic yards on any one lot and does not obstruct a drainage course.
10. Land disturbance by plowing under or burial of less than 10,000 square feet of vegetation on slopes ten percent or steeper or any amount of vegetation, up to one acre, on slopes flatter than ten percent.
11. Grading done by or under the supervision or construction control of a public agency that assumes full responsibility for the work to the extent required by this law.
12. Cultivation of land to raise crops, or other clearing and grading of land for agricultural operations pursuant to criteria enacted and codified in Article 11 of this chapter.
13. Maintenance of existing firebreaks and roads to keep the firebreak or road substantially in its original condition.
14. Timber harvest and management activities when approved and carried out consistent with the California Forest Practices Act. Activities that are not exempt from the local regulation pursuant to Public Resources Code Section 4516.4 are subject to these regulations. Permits are required for private roads within timber harvest areas where the proposed

improvements are in excess of the minimum road standards required by the California Department of Forestry for timber harvesting activities.

15. Clearing for fire protection purposes within 100 feet of a dwelling unit. Any additional clearing for fire prevention, control or suppression purposes is exempt when authorized or required in writing by a fire prevention or suppression agency.

C. The County may prepare and adopt a more comprehensive exemption for grading for agricultural operations than the existing exemption for cultivation of land to raise crops as part of Article 11 to this Chapter, provided that the exemption does not involve construction of any building or site preparation for any development project and that the purpose of such exemption is to promote long-term viable agricultural use of agricultural lands while protecting natural resources and provide reasonable minimum standards that define desired performance in the prevention of man-induced land failures, and control erosion, drainage, and sediment discharge.

Exemption from the permit requirements of this Chapter shall not be deemed to grant authorization for any work to be done in any manner in violation of the provisions of this chapter or any other laws or ordinances of this jurisdiction.

Sec L-V 13.4 Hazards

A. Whenever the Building Official determines that any existing excavation or embankment or fill on private property has become a hazard to life and limb, or endangers property, or adversely affects the safety, use or stability of a public way or drainage channel, the owner of the property upon which the excavation or fill is located, or other person or agent in control of said property, upon receipt of notice in writing from the Building Official, shall within the period specified therein repair or eliminate such excavation or embankment to eliminate the hazard and to be in conformance with the requirements of this code.

Adequate protection from hazards shall be provided at excavations. All pits, shafts, etc. shall be barricaded or covered. Upon completion of exploratory excavations and other similar operations, temporary trenches, wells, pits, shafts, etc. shall be backfilled.

Sec L-V 13.5 Definitions

A. For the purpose of this Article, the definitions listed hereunder shall be construed as specified in this section.

1. AGRICULTURAL OPERATION for grading purposes is any land-related activity for the purpose of cultivating or raising plants or animals or conserving or protecting lands for such purpose and is not surface mining or borrow pit operations.
2. AMERICAN SOCIETY FOR TESTING AND MATERIALS (ASTM) is a membership society that is the foremost United States source of information on the specifications and testing of materials.
3. APPROVAL shall mean that the proposed work or completed work conforms to this chapter in the opinion of the Building Official.
4. AS-GRADED is the extent of surface conditions on completion of grading.
5. BEDROCK is in-place solid rock.
6. BENCH is a relatively level step excavated into earth material on which fill is to be placed.
7. BORROW is earth material acquired from an off-site location for use in grading on a site.
8. BEST MANAGEMENT PRACTICES (BMPs) are physical and managerial practices that, when used separately, or in combination, prevent or reduce erosion, sedimentation, or pollution of water. An example of a guide for BMPs is the State Water Resources Control Board Best Management Practices Construction Handbook.
9. CERTIFIED EROSION CONTROL PROFESSIONAL (CPESC) is a recognized specialist in soil erosion and sediment control.

10. CIVIL ENGINEER is a professional engineer registered in the state to practice in the field of civil works.

11. CIVIL ENGINEERING is the application of the knowledge of the forces of nature, principles of mechanics and the properties of materials to the evaluation, design and construction of civil works.

12. CLEARING is the destruction or removal of vegetative surface cover by manual, mechanical, or chemical methods resulting in exposed soils that may be subject to erosion. This does not include clearing techniques that retain vegetation and natural drainage patterns.

13. COMPACTION is the densification of a fill by mechanical means.

    CONSTRUCTION ACTIVITIES include, but are not limited to: clearing, grading, demolition, excavation, construction of new structures, and reconstruction of existing facilities involving removal and replacement that results in soil disturbance. This includes construction access roads, staging areas, storage areas, stockpiles, and any off-site areas that receive run-off from the construction project such as discharge points into a receiving water. Construction activity does not include routine maintenance to maintain original line and grade, hydraulic capacity, or original purpose of the facility.

15. CUT. See Excavation.

16. DEPTH OF FILL is the vertical dimension from the exposed fill surface to the original ground surface.

17. DEPTH OF EXCAVATION (CUT) is the vertical dimension from the exposed cut surface to the original ground surface.

18. EARTH MATERIAL is any rock, natural soil or fill or any combination thereof.

19. EMBANKMENT. See Fill.

20. ENGINEERING GEOLOGIST is a geologist experienced and knowledgeable in engineering geology.

21. ENGINEERING GEOLOGY is the application of geologic knowledge and principles in the investigation and evaluation of naturally occurring rock and soil for use in the design of civil works.

22. ENGINEERED GRADING PLAN is a plan prepared by registered design professional authorized to do so by the state of California, describing the vertical and horizontal alignment and/or arrangement of grading.

23. EROSION is the wearing away of the ground surface as a result of the movement of wind, water or ice.

24. EXCAVATION is the mechanical removal of earth material.

25. EXPANSIVE SOIL is any soil which exhibits expansive properties in excess of index rating of 20 as determined by the procedures defined in the California Building Code.

26. FILL is a deposit of earth material placed by artificial means.

27. GEOLOGIC HAZARD is any condition in naturally occurring earth materials which may endanger life, health or property.

28. GEOTECHNICAL ENGINEER. See "soils engineer."

29. GRADE is the vertical location of the ground surface.

30. GRADING PLAN See engineered grading plan.

31. EXISTING GRADE is the grade prior to grading.

32. FINISH GRADE is the final grade of the site that conforms to the approved plan.

33. ROUGH GRADE is the stage at which the grade approximately conforms to the approved plan.

34. GRADING is any excavating or filling or combination thereof.

35. GRADING WORK is grading and related work such as, but not limited to, drainage improvements and erosion and sediment control.

36. KEY is a designed compacted fill placed in a trench excavated in earth material beneath the toe of a proposed fill slope.

37. LAND DISTURBANCE is any activity that results in a change in the soil cover or the soil topography that may result in soil erosion from water or wind and the movement of sediments off site, including, but not limited to, clearing, grading, excavating, transporting, and filling of land.

38. PROFESSIONAL INSPECTION is the inspection required by this code to be performed by the civil engineer, soils engineer or engineering geologist. Such inspections include that performed by persons supervised by such engineers or geologists and shall be sufficient to form an opinion relating to the conduct of the work.

39. RAINY SEASON is the period of the year during which there is a substantial risk of rainfall. For the purpose of this Chapter, the rainy season is defined as from October 15th to April 15th, inclusive.

40. REGISTERED ENVIRONMENTAL HEALTH SPECIALIST (REHS) is an environmental health professional educated and trained within the field of environmental health who is registered with the State.

41. SEDIMENT is any material transported or deposited by water, including soil debris or other foreign matter.

42. SITE is any lot or parcel of land or contiguous combination thereof, under the same ownership, where grading is performed or permitted.

43. SLOPE is an inclined ground surface the inclination of which is expressed as a ratio of horizontal distance to vertical distance.

44. SLOPE, DETERMINATION OF means the cross-slope of a parcel by measurement, at established intervals not crossing defined grade breaks, of the average slope perpendicular to the contour lines.

45. SOIL is naturally occurring superficial deposits overlying bedrock.

46. SOILS ENGINEER (GEOTECHNICAL ENGINEER) is an engineer experienced and knowledgeable in the practice of soils engineering (geotechnical) engineering.

47. SOILS ENGINEERING (GEOTECHNICAL ENGINEERING) is the application of the principles of soils mechanics in the investigation, evaluation and design of civil works involving the use of earth materials and the inspection or testing of the construction thereof.

48. STORM WATER POLLUTION PREVENTION PLAN (SWPPP) is a plan required for various construction and industrial activities pursuant to the Federal Clean Water Act and related State regulations.

49. TERRACE is a relatively level step constructed in the face of a graded slope surface for drainage and maintenance purposes.

50. VEHICULAR WAY is any public or private roadway or driveway designed for or used by vehicles (as defined by the California Vehicle Code).

51. WATERCOURSE is any natural or manmade channel flowing continuously or intermittently in a definite direction and course or used for the holding, delay or storage of waters, which functions at any time to convey or store storm water runoff. Natural channels shall generally be limited to those designated by a solid line or a dash and three dots as shown in blue on the most recent U.S. Geological Survey 7.5 minute series of topographic maps. At the discretion of the Building Official, the definition of natural Channel may be limited to those channels having a watershed area of 50 acres or more, and this definition will be commonly used in connection with the administration of this Chapter except for those cases in which the Building Official determines that the definition must be extended to a natural channel with a watershed smaller than 50 acres in order to prevent a condition which is a

menace to life and limb, endangers property, is a hazard to public safety, adversely affects the safety, use or serviceability of adjacent property, public way or drainage channel, or could adversely affect the water quality of any water bodies or watercourses were the definition not extended to a particular natural channel with a watershed below 50 acres.

Sec L-V 13.6 Grading Permit Requirements

A. Except as exempted in Sec. L-V 13.3 of this Code, no person shall do any grading without first obtaining a grading permit from the Building Official. A separate permit shall be obtained for each site, and may cover both excavations and fills.

1. No person shall do or permit to be done any grading in such a manner that quantities of dirt, soil, rock, debris, or other material substantially in excess of natural levels are washed, eroded, or otherwise moved from the site, except as specifically provided for by a permit.

2. No person shall do or permit to be done any grading which may obstruct, impede or interfere with the natural flow of storm waters, whether such waters are unconfined upon the surface of the land or confined within land depressions or natural drainage ways, unimproved channels or watercourses, or improved ditches, channels or conduits, in such manner as to cause flooding where it would not otherwise occur, aggravate any existing flooding condition or cause accelerated erosion except where said grading is in accordance with all applicable laws, including but not limited to, these permit requirements.

Dam construction of "Jurisdictional Size" are regulated and permitted by the Department of Water Resources, Division of Dam Safety. Dam construction of "Non-Jurisdictional Size" are regulated and permitted by the Building Department" (See Figure A).

Figure A

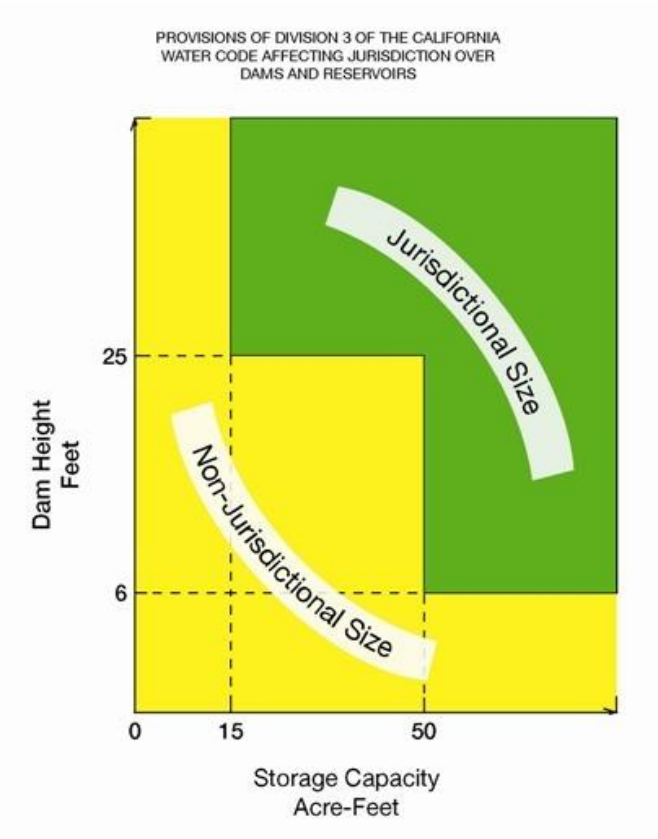

The construction of dams and reservoirs in excess of five feet in height but 25 feet or less in height from the natural bed of the stream or watercourse at the downstream toe of the

barrier, regardless of storage capacity, or which have a storage capacity in excess of 15 acre feet but less than 50 acre feet, regardless of height, shall be subject to County regulatory jurisdiction administered by the Building Department as part of this Chapter. Construction of all dams and reservoirs shall follow the current practices of the Department of Water Resources, Division of Safety of Dams, as dictated in the publication, "Guidelines for the Design and Construction of Small Embankment Dams" (with the exception of contact agency and application process).

3. Pond Construction and design shall be done in conformance with the most recent Conservation Practice Standard, "Pond" (Code 378) as published by the Natural Resources Conservation Service.

B. The provisions of Section 105, Chapter 1, Division II, are applicable to grading. Additionally, the application shall state the estimated quantities of work involved.

C. Grading shall be performed in accordance with the approved grading plan prepared by registered design professional, and shall be designated "engineered grading" The Building Official may waive this requirement if the proposed grading is minor in nature and would not endanger the public health, safety and welfare. This grading shall be designated "regular grading".

D. Engineered Grading Requirements

1. For engineered grading requirements applications for a grading permit shall be accompanied by three set of plans and two sets of specifications and supporting data. A soils/geotechnical engineering report shall be provided in accordance with the California Building Code.

   a. When the proposed grading includes a cut or fill exceeding ten feet in-depth at any point, or a cut or fill exceeding seven feet in depth at any point with the slope of the natural ground exceeding twenty (20) percent;

   b. When highly expansive soils are present; or

   c. In areas of known or suspected geological hazards, including landslide hazards and hazards of ground failure stemming from seismically induced ground shaking.

   An engineering geology report shall be included with the supporting data when the proposed grading is in excess of 5,000 cubic yards. (See Sec. L-V 13.6(F)).

   Specifications shall contain information covering construction and material requirements.

   Plans shall be drawn to scale and shall be of sufficient clarity to indicate the nature and extent of the work proposed and show in detail that they will conform to the provisions of this Code and all relevant laws, ordinances, rules and regulations. The first sheet of each set of plans shall give location of the work, the name and address of the owner, and the person by whom they were prepared.

2. The plans shall include the following information:

   a. General vicinity of the proposed site.

   b. Property limits and accurate contours of existing ground and details of terrain and area drainage.

   c. Limiting dimensions, elevations or finish contours to be achieved by the grading, and proposed drainage channels and related construction.

   d. Detailed plans of all surface and subsurface drainage devices, walls, cribbing, dams and other protective devices to be constructed with, or as a part of, the proposed work, together with a map showing the drainage area and the estimated runoff of the area served by any drains.

   e. Location of any buildings or structures on the property where the work is to be performed and the location of any buildings or structures on land of adjacent owners that are within 15 feet (4572, mm) of the property or that may be affected by the proposed grading operations.

f. Recommendations included in the soils engineering report and the engineering geology report shall be incorporated in the grading plans or specifications. When approved by the Building Official, specific recommendations contained in the soils engineering report and the engineering geology report, which are applicable to grading, may be included by reference.

g. The dates of the soils engineering and engineering geology reports together with the names, addresses and phone numbers of the firms or individuals who prepared the reports.

h. Cross sections (not less than two) of existing and proposed graded areas taken at intervals not exceeding 200 feet and at locations of maximum cuts and fills.

i. An estimate of the quantities of excavation and fill, including quantities to be moved both on and off site.

j. A detailed erosion and sediment control plan including specific locations, construction details and supporting calculations for temporary and permanent sediment control structures and facilities.

k. A landscaping plan, including temporary erosion control plantings, permanent drought-resistant slope plantings, replacement or temporary groundcover, and irrigation facilities.

l. The location of any borrow site or location for disposal of surplus material.

E. The soils engineering report required by Sec. L-V 13.6(D) shall include:

1. An index map showing the regional setting of the site;

2. A site map that shows the topographic features of the site and locations of all soil borings and test excavations accompanied with a log for each soil boring and test excavation;

3. Classification of the soil types and data regarding the nature, distribution and strength of existing soils;

4. A suitable scaled map and cross sections showing all identified areas of land slippage;

5. A description of any encountered groundwater or excessive moisture conditions;

6. Conclusions and recommendations for grading procedures and design criteria for corrective measures, including buttress fills, when necessary;

7. Opinion on adequacy for the intended use of sites to be developed by the proposed grading as affected by soils engineering factors, including the stability of slopes.

F. The engineering geology report required by Sec. L-V 13.6(D) shall include:

1. An adequate description of the geology of the site and geology of the adjacent areas when pertinent to the site;

2. Conclusions and recommendations regarding the effect of geologic conditions on the proposed development;

3. Opinion on the adequacy for the intended use of sites to be developed by the proposed grading, as affected by geologic factors; and

4. Recommendations for mitigation of geologic hazards.

G. The Building Official may require a geotechnical investigation in accordance with the California Building or Residential Code when, during the course of an investigation, any of the following conditions are discovered, the report shall address the potential for liquefaction:

1. Shallow ground water, 50 feet (15240, mm) or less;

2. Unconsolidated sandy alluvium;

3. Seismic Design Category C,D, E or F.

H. Regular Grading Requirements

1. Each application for a grading permit shall be accompanied by a plan in sufficient clarity to indicate the nature and extent of the work. The plans shall give the location of the work, the name of the owner and the name of the person who prepared the plan. The plan shall include the following information:
   a. General vicinity of the proposed site;
   b. Limiting dimensions and depth of cut and fill;
   c. Location of any buildings or structures where work is to be performed, and the location of any buildings or structures with fifteen (15) feet (4572, mm) of the proposed grading;
   d. Property limits and accurate contours of existing ground;
   e. Typical cross section(s) of the existing and proposed graded area(s) at locations of maximum cut and fill;
   f. An estimate of the quantities of excavation and fill, including quantities to be moved both on and off site.

I. The provisions of those applicable sections of Division II of the California Building Code are applicable to grading permits. The Building Official may require that grading operations and project designs be modified if delays occur which incur weather-generated problems not considered at the time the permit was issued.

J. The Building Official may require professional inspection and testing. When the Building Official has cause to believe that geologic factors may be involved, the grading will be required to conform to engineered grading.

K. In issuing a permit, the Building Official may impose conditions as prescribed by this Chapter necessary to protect the health, safety and welfare of the public, to prevent the creation of a hazard to public or private property, and to assure proper completion of the grading, including, but not limited to:
   1. Mitigation of adverse environmental impacts as disclosed by any environmental document findings;
   2. Improvement of any existing unstable grading affected by this permit to comply with the standards of this Chapter;
   3. Protection of grading which would otherwise be hazardous;
   4. Dust, erosion and sediment control, and season of work, weather conditions, sequence of work, access roads and haul routes;
   5. Safeguard watercourses from excessive deposition of sediment or debris;
   6. Safeguard areas reserved for on-site sewage disposal, water supply and hazardous material storage;
   7. Assurance that the land area in which grading is proposed and for which habitable structures are proposed is not subject to hazards of land slippage or significant settlement or erosion;
   8. Compliance with all applicable provisions of the Nevada County Land Use and Development Code;

L. If grading operations are commenced before first securing a proper permit, no permit will be issued until illegal grading has stopped. In the event that no grading permit, erosion control permit or land use permit can be issued for such operation, the site shall be restored to its original condition to the extent feasible, and to the extent full restoration is not possible mitigation measures may be imposed to remediate any damage caused. Restoration shall be in conformity to an approved restoration plan;

M. Winter operations shall not be allowed if an immitigable high potential for accelerated erosion exists due to slope, rock or soil type, proximity to a stream or drainage course, magnitude or duration of

disturbance, or other characteristics of the project and the site. Approval shall be obtained from the Building Official prior to any grading activity during the Rainy Season.

Sec L-V 13.7 Grading Fees

Permit and plan review fees shall be as set forth in the fee schedule adopted by Resolution of the Nevada County Board of Supervisors.

Sec L-V 13.8 Bonds

A. As a condition for the issuance of a permit, the Building Official may require the deposit of improvement security in sufficient amount deemed necessary to ensure that the work, if not completed in accordance with the approved plans and specifications, will be corrected to eliminate hazardous conditions or, in the case of a subdivision, where the permittee does not proceed with preparation and obtaining the approval of a final map. Said security shall be in the form of cash, a certified or cashier's check, a letter of credit, or a faithful performance bond executed by the applicant and a corporate surety authorized to do business in this state. The form of security shall be acceptable to County Counsel. Public agencies are exempted from this provision by law.

B. In the case of subdivisions, the improvement security shall remain in effect until final inspections have been made and the Building Official has accepted all grading work and subdivision improvements as being complete or until the subdivider has entered into an agreement to complete all unfinished work and improvements and furnished improvement security pursuant to Section L-V 13.8, whichever first occurs.

C. For projects other than subdivisions, the improvements security shall remain in effect until final inspections have been made and the Building Official has accepted all grading work as being complete.

D. In addition to the improvement security, the Building Official may also require the deposit of maintenance security in a sufficient amount deemed necessary by him to guarantee and maintain the grading work to assure the proper functioning of drainage systems and adequate erosion and sedimentation control. Said maintenance security shall be in the form of cash, a certified or cashier's check, a letter of credit, or a faithful performance bond executed by the applicant and a corporate surety authorized to do business in this state and shall remain in effect for a period of one (1) year after the date of expiration of the improvement security as designated in Subsection B and C above.

E. Any bond or deposit required by the Building Official pursuant to this Section shall be payable to the Nevada County Building Department.

F. Upon satisfaction of applicable provisions of this Chapter, the improvement and maintenance security deposits or bonds will be released. However, upon failure to complete the work, failure to comply with all of the terms of the permit, or failure of the completed site to function properly to provide proper drainage or erosion and sedimentation control, the County may do the required work, or cause it to be done, and collect from the permittee or surety all costs incurred thereto, including administrative and inspection costs. Any unused portion of a deposit or bond shall be refunded to the permittee after deduction by the County of the cost of the work.

Sec L-V 13.9 Cuts

A. Unless otherwise recommended in the approved soils engineering or engineering geology report, cuts shall conform to the provisions of this section.

In the absence of an approved soils engineering report, these provisions may be waived for minor cuts not intended to support structures.

B. The slope of cut surfaces shall be no steeper than is safe for the intended use and shall be no steeper than 1 unit vertical in 2 units horizontal (50% slope) unless the permittee furnishes a soils engineering or an engineering geology report, or both, stating that the site has been investigated

and giving an opinion that a cut at a steeper slope will be stable and not create a hazard to public or private property.

EXCEPTION: A cut surface may be at a slope gradient of 1.5 horizontal to 1 vertical (67 percent) provided that all of the following are met:

1. It is not intended to support structures or surcharges.
2. It is adequately protected against erosion.
3. It is no more than 8 feet in height.
4. The soil is not classified as CH, CL, or MH.
5. It is approved by the Building Official

Sec L-V 13.10 Fills

A. Unless otherwise recommended in an approved soils engineering report, fills shall conform to the provisions of this Section.

1. Where fill is intended to support any permanent structure, an engineered grading plan shall be required. The placement and compaction requirements shall be as stated in the engineering report.
2. Where fill is intended to support any paved surface, or is part of a fire access road or driveway, the requirements of Sec. L-V 13.10 shall be followed.
3. The guidelines of Sec. L-V 13.10 shall be followed for all other fills except compaction to a minimum of 90 percent of maximum density need not be provided for minor fills not intended as a buildable area. Lots with non-engineered fills or fills not compacted in compliance with Sec. L-V 13.10(D) shall be documented. Future development on the lots shall require a qualified person to determine the proposed work is not within the fill area or can adequately be built in the fill area.

B. Fill slopes shall not be constructed on natural slopes steeper than 1 unit vertical in 2 units horizontal (50% slope). The ground surface shall be prepared to receive fill by removing vegetation, non-complying fill, topsoil and other unsuitable materials scarifying to provide a bond with the new fill and, where slopes are steeper than 1 unit vertical in 5 units horizontal (20% slope) and the height is greater than 5 feet (1524, mm), by benching into sound bedrock or other competent material as determined by the soils engineer. The bench under the toe of a fill on a slope steeper than 1 unit vertical in 5 units horizontal (20% slope) shall be at least 10 feet (3048, mm) wide. The area beyond the toe of fill shall be sloped for sheet overflow or a paved drain shall be provided. When fill is to be placed over a cut, the bench under the toe of fill shall be at least 10 feet (3048, mm) wide but the cut shall be made before placing the fill and acceptance by the soils engineer or engineering geologist or both as a suitable foundation for fill.

C. Detrimental amounts of organic material shall not be permitted in fills. Except as permitted by the Building Official, no rock or similar irreducible material with a maximum dimension greater than 12 inches (305 mm) shall be buried or placed in fills.

EXCEPTION: The Building Official may permit placement of larger rock when the soils engineer properly devises a method of placement, and continuously inspects its placement and approves the fill stability. The following conditions shall also apply:

1. Prior to issuance of the grading permit, potential rock disposal areas shall be delineated on the grading plan;
2. Rock sizes greater than 12 inches (305 mm) in maximum dimension shall be 10 feet (3048, mm) or more below grade, measured vertically;
3. Rocks shall be placed so as to assure filling of all voids with well-graded soil.

D. All fills shall be compacted to a minimum of 90 percent of maximum density.

E. The slope of fill surfaces shall be no steeper than is safe for the intended use. Fill slopes shall be no steeper than 1 unit vertical in 2 units horizontal (50% slope).

Sec L-V 13.11 Setbacks

A. Cut and fill slopes shall be set back from site boundaries in accordance with this section. Setback dimensions shall be horizontal distances measured perpendicular to the site boundary. Setback dimensions shall be as shown in Figure A-33-1.

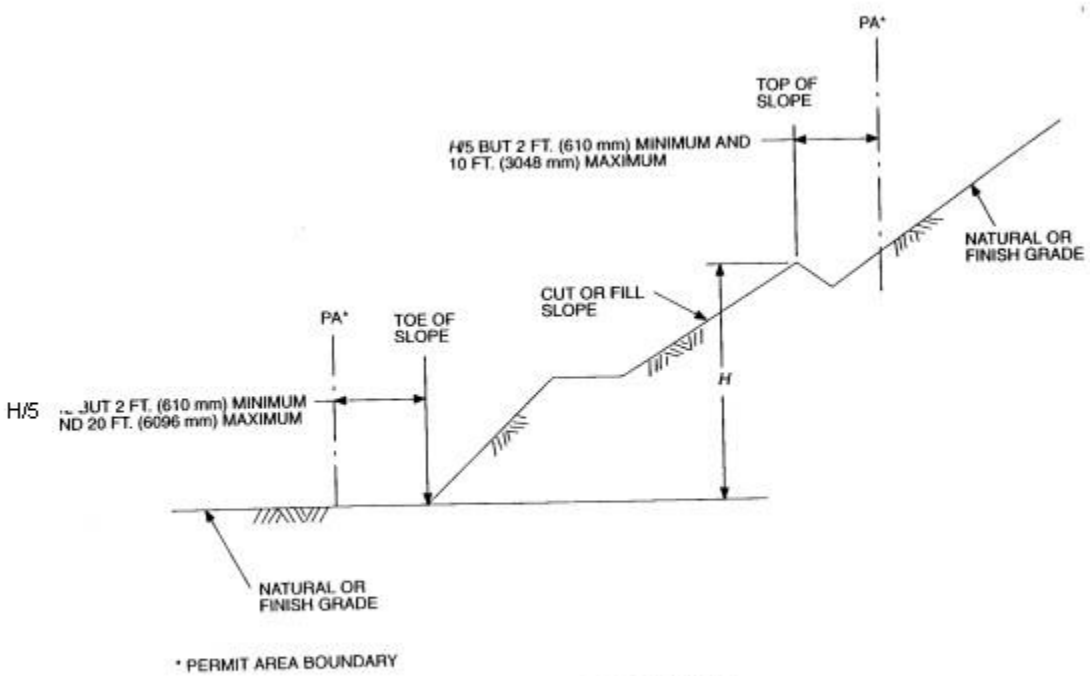

FIGURE A-33-1—SETBACK DIMENSIONS

B. The top of cut slopes shall not be made nearer to a site boundary line than one fifth of the vertical height of cut with a minimum of 2 feet (610 mm) and a maximum of 10 feet (3048 mm). The setback may need to be increased for any required interceptor drains.

C. The toe of fill slope shall be made not nearer to the site boundary line than one fifth the height of the slope with a minimum of 2 feet (610 mm) and a maximum of 20 feet (6096, mm). Where a fill slope is to be located near the site boundary and the adjacent off-site property is developed, special precautions shall be incorporated in the work as the Building Official deems necessary to protect the adjoining property from damage as a result of such grading. These precautions may include but are not limited to:

1. Additional setbacks;
2. Provision for retaining or slough walls;
3. Mechanical or chemical treatment of the fill slope surface to minimize erosion;
4. Provisions for the control of surface waters.

D. The Building Official may approve alternate setbacks. The Building Official may require an investigation and recommendation by a qualified engineer or engineering geologist to demonstrate that the intent of this section has been satisfied.

Sec L-V 13.12 Drainage and Terracing

A. Unless otherwise recommended by a registered design professional, drainage facilities and terracing shall be provided in accordance with the requirements of this section.

Exception: Drainage facilities and terracing need not be provided where the ground slope is not steeper than 3 horizontal to 1 vertical (33 percent).

All areas shall be graded and drained so that water will not pond or accumulate. Drainage shall be effected in such a manner that it will not cause erosion or endanger the stability of any cut or fill slope or any building or structure.

Storm drainage and design standards not otherwise specified herein shall comply with Article 5 "Storm Drainage", Chapter XVII, of the County of Nevada Land Use and Development Code.

B. Terraces at least 6 feet (1829, mm) in width shall be established at not more than 30-foot (9144, mm) vertical intervals on all cut or fill slopes to control surface drainage and debris except that where only one terrace is required, it shall be at mid-height. For cut or fill slopes greater than 60 feet (18288, mm) and up to 120 feet (36576, mm) in vertical height, one terrace at approximately mid-height shall be 12 feet (3658, mm) in width. Terrace widths and spacing for cut and fill slopes greater than 120 feet (36576, mm) in height shall be designed by the civil engineer and approved by the Building Official. Suitable access shall be provided to permit proper cleaning and maintenance.

Swales or ditches on terraces shall have a minimum gradient of 5 percent and must be paved with reinforced concrete not less than 3 inches (76 mm) in thickness or an approved equal paving. They shall have a minimum depth at the deepest point of 1 foot (305 mm) and a minimum paved width of 5 feet (1524, mm).

A single run of swale or ditch shall not collect runoff from a tributary area exceeding 13,500 square feet (1254.2, m^2) (projected) without discharging into a down drain.

C. Cut and fill slopes shall be provided with subsurface drainage as necessary for stability.

D. All drainage facilities shall be designed to carry waters to the nearest practicable drainage way approved by the Building Official or other appropriate jurisdiction as a safe place to deposit such waters. Erosion of ground in the area of discharge shall be prevented by installation of non-erosive down-drains or other devices.

Building pads shall have a drainage gradient of five (5) percent toward approved drainage facilities, unless waived by the Building Official.

EXCEPTION: The gradient from the building pad may be two (2) percent if all of the following conditions exist throughout the permit area:

1. No proposed fills are greater than 10 feet (3048, mm) in maximum depth.
2. No proposed finish cut or fill slope faces have a vertical height in excess of 10 feet (3048, mm).
3. No existing slope faces steeper than 1 unit vertical in 10 units horizontal (10% slope) have a vertical height in excess of 10 feet (3048, mm).

When surface drainage is discharged onto any property, it shall be discharged in such a manner that it will not cause erosion or endanger any cut or fill slope or any building or structure. A grading and discharge plan shall be required which includes the analysis of the effect of the discharge.

E. Paved interceptor drains shall be installed along the top of all cut slopes where the tributary drainage area above slopes toward the cut and has a drainage path greater than 40 feet (12192, mm) measured horizontally. Interceptor drains shall be paved with a minimum of 3 inches (76 mm) of concrete or gunite and reinforced. They shall have a minimum depth of 12 inches (305 mm) and a minimum paved width of 30 inches (762 mm) measured horizontally across the drain. The slope of drain shall be approved by the Building Official.

F. Drainage across property lines shall not exceed that which existed prior to grading. Excess or concentrated drainage shall be contained on site or directed to an approved drainage facility. Erosion of the ground in the area of discharge shall be prevented by installation of non-erosive down drains and other devices.

Sec L-V 13.13 Road and Driveway Standards

A. The construction and design of all roadways shall be done in conformance with Article 3, "Road Design Standards", Chapter XVII, LUDC.

B. The construction and design of all driveways shall be done in conformance with Article 3, "Driveways", Chapter XVI, LUDC.

1. At no place along the length of a driveway shall the grade be in excess of the established grades in Article 3, "Driveways" Chapter XVI, LUDC.

Sec L-V 13.14 Erosion Control

A. The following shall apply to the control of erosion and sediment from grading and construction activities resulting in land disturbance:

1. Plans shall be designed with long-term erosion and sediment control as a primary consideration;
2. Grading and construction activities during the rainy season shall provide erosion and sediment control measures except upon a clear demonstration to the satisfaction of the Building Official that at no stage of the work will there be any substantial risk of increased sediment discharge from the site;
3. Should land disturbance be permitted during the rainy season, the smallest practicable area of erodible land shall be exposed at any one-time during grading operations and the time of exposure shall be minimized;
4. Natural features, including vegetation, terrain, watercourses and similar resources shall be preserved wherever possible. Limits of land disturbance shall be clearly defined and marked to prevent damage by construction equipment;
5. Permanent drought-resistant vegetation and structures for erosion and sediment control shall be installed as soon as possible;
6. Provision shall be made for long-term maintenance of permanent erosion and sediment control structures and vegetation;
7. No topsoil shall be removed from the site unless otherwise directed or approved by the Building Official. Topsoil overburden shall be stockpiled and redistributed within the graded area after rough grading to provide a suitable base for seeding and planting. Runoff from the stockpiled area shall be controlled to prevent erosion and resultant sedimentation of receiving water;
8. Runoff shall not be discharged from the site in quantities or at velocities substantially above those that occurred before land disturbance, or channeled, concentrated or redirected except into drainage facilities whose design has been specifically approved by the Building Official;
9. The permittee shall take reasonable precautions to ensure that vehicles do not track or spill earth materials into public streets and shall immediately remove such materials if this occurs.

B. Should increased sediment discharge occur or become imminent, the permittee shall take all necessary steps to control such discharge. Such steps may include construction of additional facilities or removal or alteration of facilities required by approved erosion and sediment control plans. Facilities removed or altered shall be restored as soon as possible afterward or appropriate changes in the plan shall be immediately requested pursuant to this Chapter. Permittee shall take prompt action to resolve emergency problems; otherwise, the Building Official may take such actions as required to abate a hazardous public nuisance.

C. Erosion and sediment control plans prepared pursuant to this Chapter shall comply with all of the following:

1. The erosion and sediment control plan need not be a separate sheet if all facilities and measures can be shown on the grading sheets without obscuring the clarity of either the grading plan or the erosion and sediment control plan.
2. An erosion and sediment control plan shall be required for any grading project required to have a grading permit.

   EXCEPTION: The Building Official determines that the grading and/or construction activity will not impose a significant erosion or sediment discharge hazard.
3. Erosion and sediment control plans shall include an effective re-vegetation program to stabilize all disturbed areas that will not be otherwise protected. All such areas where construction activities have been completed between April 15th and October 15th shall be planted no later than November 1st. Land disturbance areas completed at other times of the year shall be planted within 15 days. If re-vegetation is infeasible or cannot be expected to stabilize an erodible area with assurance during any part of the rainy season and the unstable area exceeds 2,500 square feet, additional erosion and sediment control measures or irrigation of planted slopes may be required as appropriate to prevent increased sediment discharge.
4. Erosion and sediment control plans shall be designed to prevent increased discharge of sediment at all stages of grading and construction activities from initial disturbance of the ground to project completion. Every feasible effort shall be made to ensure that site stabilization is permanent. Plans shall indicate the implementation period and the stage of construction where applicable.
5. Erosion and sediment control plans shall comply with the recommendations of any Civil Engineer, Geotechnical Engineer, Engineering Geologist, Architect, or Soil Erosion Control Specialist involved in preparation of the grading plans.
6. The structural and hydraulic adequacy of all storm water containment or conveyance facilities shown on the erosion and sediment control plans shall be verified by a Civil Engineer, and he shall so attest on the plans. Sufficient calculations and supporting material to demonstrate such adequacy shall accompany the plans when submitted.
7. Erosion and sediment control plans shall be designed to meet anticipated field conditions.
8. Erosion and sediment control plans shall provide for inspection and repair of all erosion and sediment control facilities at the close of each working day during the rainy season, and for specific sediment clean-out and vegetation maintenance criteria.
9. Erosion and sediment control plans shall comply with any and all standards and specifications adopted herein for the control of erosion and sedimentation on grading sites. These standards and specifications shall be in general compliance with the Erosion and Sediment Control Guidelines for Developing Areas of the Sierras published by High Sierra Resource Conservation and Development Council.
10. For projects subject to the State requirements to prepare a SWPPP (Storm Water Pollution Prevention Program) a preliminary SWPPP may be submitted in lieu of the erosion and sediment control plan required by these regulations.
11. Erosion control measures shall be installed in accordance with the issued grading and/or construction plans prior to any rain event. Any grading completed between October 15th and April 15th shall have all erosion control materials that are required be installed in accordance with the issued construction and grading plans onsite.

Sec L-V 13.15 Grading Inspection

A. Grading operations for which a permit is required shall be subject to inspection by the Building Official. Professional inspection of grading operations shall be provided by the civil engineer, soils engineer, and the engineering geologist retained to provide such services in accordance with Sec L-V 13.15(E) for engineered grading and as required by the Building Official for regular grading.

B. The civil engineer shall provide professional inspection within such engineer's area of technical specialty, which shall consist of observation and review as to the establishment of line, grade and surface drainage of the development area. If revised plans are required during the course of the work, they shall be prepared by the civil engineer.

C. The soils engineer shall provide professional inspection within such engineer's area of technical specialty, which shall include observation during grading and testing for required compaction. The soils engineer shall provide sufficient observation during the preparation of the natural ground and placement and compaction of the fill to verify that such work is being performed in accordance with the conditions of the approved plan and the appropriate requirements of this chapter. Revised recommendations relating to conditions differing from the approved soils engineering and engineering geology reports shall be submitted to the permittee, the Building Official and the civil engineer.

D. The engineering geologist shall provide professional inspection within such engineer's area of technical specialty, which shall include professional inspection of the bedrock excavation to determine if conditions encountered are in conformance with the approved report. Revised recommendations relating to conditions differing from the approved engineering geology report shall be submitted to the soils engineer.

E. The permittee shall be responsible for the work to be performed in accordance with the approved plans and specifications and in conformance with the provisions of this code, and the permittee shall engage consultants, if required, to provide professional inspections on a timely basis. The permittee shall act as a coordinator between the consultants, the contractor and the Building Official. In the event of changed conditions, the permittee shall be responsible for informing the Building Official of such change and shall provide revised plans for approval.

Periodic progress reports may be required to be rendered by the permittee at commencement and completion of major key grading and erosion and sediment control operations.

No permittee shall be deemed to have complied with this Chapter until the Building Official has made a final inspection of the work and he has certified in writing that the work has been completed in accordance with all requirements and conditions of the permit.

The permittee shall provide adequate access to the site for inspection by the Building Official during the performance of all work and for a minimum period of one year after acceptance by the Building Official of all improvements pursuant to this Chapter.

F. The Building Official shall inspect the project at the various stages of work requiring approval to determine that adequate control is being exercised by the professional consultants.

G. If, in the course of fulfilling their respective duties under this Chapter, the civil engineer, the soils engineer, or the engineering geologist finds that the work is not being done in conformance with this Chapter or the approved grading plans, the discrepancies shall be reported immediately in writing to the permittee and to the Building Official.

H. If the civil engineer, the soils engineer, or the engineering geologist of record is changed during grading, the work shall be stopped until the replacement has agreed in writing to accept their responsibility within the area of technical competence for approval upon completion of the work. It shall be the duty of the permittee to notify the Building Official in writing of such change prior to the recommencement of such grading.

I. As a condition of the permit, the Building Official may require the permittee to provide, at permittee's expense, a Geotechnical Engineer or Civil Engineer to perform continuous inspection work, and upon completion of the work to provide a written statement acknowledging that he has inspected the work and that in his professional judgment the work was performed in accordance with the approved plans and specifications. The permittee shall make contractual arrangements for such services and be responsible for payment of all costs. Continuous inspection by a Geotechnical Engineer or Civil Engineer shall include, but not be limited to, the following situations:

1. During the preparation of a site for the placement of fills which exceed five (5) feet in depth on slopes which exceed ten percent (10%) and during the placing of such fills; however,

for vehicular pathways, fill placement shall be continuously inspected when fills exceed ten (10) feet in height.

2. During the preparation of a site for the placement of any fill and during the placement of such fill which is intended to support any building or structure.

3. During the installation of subsurface drainage facilities.

Reports filed by the Geotechnical Engineer or Civil Engineer regarding special inspection shall state in writing that from his personal knowledge the work performed during the period covered by the report has been performed in substantial accordance with the approved plans and specifications.

The use of a Geotechnical Engineer or Civil Engineer for inspections shall not preclude the Building Official from conducting inspections using his or other authorized inspectors as may be necessary.

Sec L-V 13.16 Completion of Work

A. Upon completion of the rough grading work and at the final completion of the work, the following reports and drawings and supplements thereto are required for engineered grading or when professional inspection is performed for regular grading, as applicable.

1. An as-built grading plan prepared by the civil engineer retained to provide such services in accordance with Sec L-V 13.15(E) showing original ground surface elevations, as-graded ground surface elevations, lot drainage patterns, and the locations and elevations of surface drainage facilities and of the outlets of subsurface drains. As-constructed locations, elevations and details of subsurface drains shall be shown as reported by the soils engineer.

Civil engineers shall state that to the best of their knowledge the work within their area of responsibility was done in accordance with the final approved grading plan.

2. A report prepared by the soils engineer retained to provide such services in accordance with Sec. L-V 13.15(C) of this Chapter, including locations and elevations of field density tests, summaries of field and laboratory tests, other substantiating data, and comments on any changes made during grading and their effect on the recommendations made in the approved soils engineering investigation report. Soils engineers shall submit a statement that, to the best of their knowledge, the work within their area of responsibilities is in accordance with the approved soils engineering report and applicable provisions of this chapter.

3. A report prepared by the engineering geologist retained to provide such services in accordance with Sec L-V 13.15(E), including a final description of the geology of the site and any new information disclosed during the grading and the effect of same on recommendations incorporated in the approved grading plan. Engineering geologists shall submit a statement that, to the best of their knowledge, the work within their area of responsibility is in accordance with the approved engineering geologist report and applicable provisions of this chapter.

4. The grading contractor shall submit, in a form prescribed by the Building Official, a statement of conformance to said as-built plan and the specifications.

B. The permittee shall notify the Building Official when the grading operation is ready for final inspection. Final approval shall not be given until all work, including installation of all drainage facilities and their protective devices, and all erosion-control measures have been completed in accordance with the final approved grading plan, and the required reports have been submitted.

EXHIBIT A

Article 14
Electric Vehicle Charging Station Permitting Process

Sections:

Sec. L-V 14.1	**Purpose**
Sec. L-V 14.2	**Applicability**
Sec. L-V 14.3	**Definitions**
Sec. L-V 14.4	**Electric Vehicle Charging Station Requirements**
Sec. L-V 14.5	**Application Standards**
Sec. L-V 14.6	**Expedited Permitting Process and Permit Review**

Sec. L-V 14.1 Purpose

The purpose of the Article is to adopt an expedited, streamlined permitting process that complies with AB 1236 and Government Code section 65850.7 to achieve timely cost-effective installation of electric vehicle charging stations. This Article encourages the installation and use of electric vehicle charging stations by removing obstacles to and minimizing the cost of permitting for charging stations, and by expanding the ability of residential, agricultural and commercial property owners to install electric vehicle charging stations. This Article allows the county to achieve these goals while protecting the public health and safety.

Sec. L-V 14.2 Applicability

This Article applies to the permitting of electric vehicle charging stations in the unincorporated area of the County of Nevada. Electric vehicle charging stations legally established or permitted prior to the implementation of this expedited permitting process are not subject to the requirements of this Article unless physical modifications or alterations are undertaken that materially change the size, type or components of an electric vehicle charging station in such a way as to require new permitting.

Sec. L-V 14.3 Definitions

A. "Electric vehicle charging station" or "charging station" means any level of electric vehicle supply equipment station that is designed and built in compliance with the California Electrical Code, as it reads on the effective date of this Article, and delivers electricity from a source outside an electric vehicle into a plug-in electric vehicle.

B. "Electronic submittal" means the utilization of one or more of the following:
   1. Email;
   2. The Internet; or
   3. Facsimile.

C. "Specific, adverse impact" means a significant, quantifiable, direct, and unavoidable impact, based on objective, identified, and written public health or safety standards, policies, or conditions as they existed on the date the application was deemed complete.

D. "A feasible method to satisfactorily mitigate or avoid the specific adverse impact" includes, but is not limited to, any cost-effective method, condition, or mitigation imposed by the County on another similarly situated application in a prior successful application for a permit.

E. "Building Official" means the officer or other designated authority charged with the administration and enforcement of the Nevada County Code, or a duly authorized representative.

F. An "association" means a nonprofit corporation or unincorporated association created for the purpose of managing a common interest development.

Sec. L-V 14.4 Electric Vehicle Charging Station Requirements

A. All electric vehicle charging stations shall meet applicable health and safety standards and requirements of local, state and federal law.

B. Electric vehicle charging stations shall meet all applicable safety and performance standards established by the California Electrical Code, the Society of Automotive Engineers, the National Electrical Manufacturers Association, and accredited testing laboratories such as Underwriters Laboratories and, where applicable, rules of the Public Utilities Commission regarding safety and reliability.

Sec. L-V 14.5 Application Standards

A. No later than September 30, 2017, the Building Official of Nevada County or his/her designee shall implement an expedited permitting process, after consulting with the local fire department or district, that will allow the Building Official to administratively approve an application to install electric vehicle charging stations through the issuance of a building permit or similar nondiscretionary permit.

B. The Building Official shall adopt a checklist of all requirements with which electric vehicle charging stations shall comply to be eligible for expedited review. The checklist and all required permitting documentation shall be published on the County of Nevada's Internet Website.

C. In developing the expedited permitting process and checklist, the Building Official may refer to the recommendations contained in the most recent version of the "Plug-In Electric Vehicle Infrastructure Permitting Checklist" and/or the "Zero-Emission Vehicles in California: Community Readiness Guidebook" published by the State of California's Office of Planning and Research. The Building Official may modify the checklist and standards found in the Guidebook due to unique climatic, geological, seismological, or topographical conditions.

D. Electronic submittal of the required permit application and supporting documents shall be made available for all electric vehicle charging station permit applications. The method of electronic submittal shall be at the County's discretion.

Sec. L-V 14.6 Expedited Permitting Process and Permit Review

A. The applicant may submit the permit application and supporting documents to the Building Department by electronic submittal. In the case of electronic submittal, the electronic signature of the applicant on all forms, applications, and other documents may be used in lieu of a wet signature.

B. An application and supporting documents that satisfy the information requirements in the checklist, as determined by the Building Official, shall be deemed complete. Upon receipt of an incomplete application, the Building Official shall issue a written correction notice detailing all deficiencies in the application and any additional information that is required to be eligible for expedited permit issuance.

C. Upon confirmation by the Building Official that the application is complete and meets the requirements of the checklist, and is consistent with this Chapter, the Building Official shall administratively approve the application and issue all required permits or authorizations. The Building Official may establish a process to prioritize competing applications for expedited permits.

   1. If the County makes a finding, based on substantial evidence, that the electric vehicle charging station could have a specific adverse impact upon the public health or safety, the County may require the applicant to apply for a use permit.

   2. The County may withhold issuance of the permit or authorization if there is a violation on record for any structure associated with the application under review.

   3. The County shall not condition approval for any electric vehicle charging station permit on the approval of an electric vehicle charging station by an association, as that term is defined in Civil Code section 4080.

D. The County shall not deny an application for a use permit to install an electric vehicle charging station unless it makes written findings based upon substantial evidence in the record that the proposed installation would have a specific adverse impact upon the public health or safety, and

there is no feasible method to satisfactorily mitigate or avoid the specific adverse impact. The findings shall include the basis for the rejection of potential feasible alternatives of preventing the adverse impact.

E. Any conditions imposed on an application to install an electric vehicle charging station shall be designed to mitigate the specific adverse impact upon the public health or safety at the lowest cost possible.

F. This expedited permitting process is intended to apply only to applications for permits for electric vehicle charging stations, and will not expedite the review of any other permit applications.

G. The Building Official's decision pursuant to Sections L-V 14.6 (C) or (D) may be appealed to the Nevada County Building and Accessibility Standards Board of Appeals in accordance with Nevada County Code Section L-V 2.1.

EXHIBIT A

Article 20
Small Residential Rooftop Solar Systems

Sections:

Sec. L-V 20.1	**Purpose**
Sec. L-V 20.2	**Applicability**
Sec. L-V 20.3	**Definitions**
Sec. L-V 20.4	**Solar Energy System Requirements**
Sec. L-V 20.5	**Duties of the Building Department and Building Official**
Sec. L-V 20.6	**Permit Review and Inspection Requirements**

Sec. L-V 20.1 Purpose

The purpose of the Article is to adopt an expedited, streamlined solar permitting process that complies with the Solar Rights Act and AB 2188 (Chapter 521, Statutes 2014) to achieve timely and cost-effective installations of small residential rooftop solar energy systems. The Article encourages the use of solar systems by reducing costs to property owners and the County, and expanding the ability of property owners to install solar energy systems. The Article allows the County to achieve these goals while protecting public health and safety.

Sec. L-V 20.2 Applicability

This Article shall apply to the permitting of all small residential rooftop solar energy systems in the County of Nevada as defined by Section L-V 20.3(B).

Solar energy systems legally established or permitted prior to the effective date of this Article are not subject to the requirements of this Article unless physical modifications or alterations are undertaken that materially change the size, type, or components of a small rooftop energy system in such a way as to require new permitting. Routine operation and maintenance shall not require a permit.

Sec. L-V 20.3 Definitions

A. "Solar Energy System" means either of the following:

1. Any solar collector or other solar energy device whose primary purpose is to provide for the collection, storage, and distribution of solar energy for space heating, space cooling, electric generation, or water heating.
2. Any structural design feature of a building, whose primary purpose is to provide for the collection, storage, and distribution of solar energy for electricity generation, space heating or cooling, or for water heating.

B. A "small residential rooftop solar energy system" means all of the following:

1. A solar energy system that is no larger than 10 kilowatts alternating current nameplate rating, or 30 kilowatts thermal.
2. A solar energy system that conforms to all applicable state fire, structural, electrical, and other building codes as adopted or amended by the County and all state and County health and safety standards.
3. A solar energy system that is installed on a single or duplex family dwelling.
4. A solar panel or module array that does not exceed the maximum legal building height as defined by the County.

C. "Electronic submittal" means the utilization of one or more of the following:

1. Email;
2. The Internet;

3. Facsimile.

D. An “association” means a nonprofit corporation or unincorporated association create for the purpose of managing a common interest development.

E. A “common interest development” means any of the following:

1. A community apartment project.
2. A condominium project.
3. A planned development.
4. A stock cooperative.

F. “Specific, adverse impact” means a significant, quantifiable, direct, and unavoidable impact, based on objective, identified, and written public health or safety standards, policies, or conditions as they existed on the date the application was deemed complete.

G. “Reasonable restrictions” on a solar energy system are those restrictions that do not significantly increase the cost of the system or significantly decrease its efficiency or specified performance, or that allow for an alternative system of comparable cost, efficiency, and energy conservation benefits.

H. “Restrictions that do not significantly increase the cost of the system or decrease its efficiency or specified performance” means:

1. For Water Heater Systems or Solar Swimming Pool Heating Systems: an amount exceeding 10 percent of the cost of the system, but in no case more than one thousand dollars ($1,000), or decreasing the efficiency of the solar energy system by an amount exceeding 10 percent, as originally specified and proposed.
2. For Photovoltaic Systems: an amount not to exceed one thousand dollars ($1,000) over the system cost as originally specified and proposed, or a decrease in system efficiency of an amount exceeding 10 percent as originally specified and proposed.

Sec. L-V 20.4 Solar Energy System Requirements

A. All solar energy systems shall meet applicable health and safety standards and requirements imposed by the California Building Standards Codes and Chapter V of the County of Nevada Land Use and Development Code.

B. Solar energy systems for heating water in single-family residences and for heating water in commercial or swimming pool applications shall be certified by an accredited listing agency as defined by the California Plumbing and Mechanical Codes.

C. Solar energy systems for producing electricity shall meet all applicable safety and performance standards established by the California Electrical Code, the Institute of Electrical and Electronics Engineers, and accredited testing laboratories such as Underwriters Laboratories and, where applicable, rules of the Public Utilities Commission regarding safety and reliability.

Sec. L-V 20.5 Duties of the Building Department and Building Official

A. All documents required for the submission of an expedited solar energy system application shall be made available on the publicly accessible County Website.

B. Electronic submittal of the required permit application and documents by email, the Internet, or facsimile shall be made available to all small residential rooftop solar energy system permit applicants.

C. An applicant’s electronic signature shall be accepted on all forms, applications, and other documents in lieu of a wet signature.

D. The Building Department shall adopt a standard plan and checklist of all requirements with which small residential rooftop solar energy systems shall comply to be eligible for expedited review.

E. The small residential rooftop solar system permit process, standard plan(s), and checklist(s) shall substantially conform to recommendations for expedited permitting, including the checklist and standard plans contained in the most current version of the California Solar Permitting Guidebook adopted by the Governor's Office of Planning and Research.

Sec. L-V 20.6 Permit Review and Inspection Requirements

A. The County Building Department shall adopt an administrative, non-discretionary review process to expedite approval of small residential rooftop solar energy systems within 30 days of the adoption on this Article. For permit applications submitted over-the-counter and electronically, the Building Department shall issue a building permit or other non-discretionary permit within five (5) business days of receipt. The time to issue a permit begins upon receipt of a complete application that meets the requirements of the approved checklist and standard plan. All fees prescribed for the permitting of small residential rooftop solar systems must comply with Government Code Section 66016 and State Health and Safety Code Section 17951.

B. Review of the application shall be limited to the Building Official's review of whether the application meets local, state, and federal health and safety requirements.

C. The Building Official may deny the application if the Building Official finds, based on substantial evidence, that the solar energy system could have a specific, adverse impact upon the public health and safety. Such findings shall be made in writing based on substantive evidence in the record that the proposed installation would have a specific, adverse impact upon public health or safety and there is no feasible method to satisfactorily mitigate or avoid, as defined, the adverse impact. Findings shall include a basis for the rejection of the potential feasible alternative for preventing the adverse impact. Such decisions may be appealed to the Building and Accessibility Standards Board of Appeals in accordance with Section L-V 2.1, which may be further appealed to the Board of Supervisors.

D. Any condition imposed on an application shall be designed to mitigate the specific, adverse impact upon health and safety at the lowest possible cost.

E. "A feasible method to satisfactorily mitigate or avoid the specific, adverse impact" includes, but is not limited to, any cost-effective method, condition, or mitigation imposed by the County on another similarly situated application in a prior successful application for a permit. The County shall use its best efforts to ensure that the selected method, condition, or mitigation meets the conditions of subparagraphs (A) and (B) of paragraph (1) of subdivision (d) of Section 714 of the Civil Code defining restrictions that do not significantly increase the cost of the system or decrease its efficiency or specified performance.

F. The County shall not condition approval of an application on the approval of an association, as defined in Section 4080 of the Civil Code.

G. If an application is deemed incomplete, a written correction notice detailing all deficiencies in the application and any additional information or documentation required to be eligible for expedited permit issuance shall be sent to the applicant for resubmission.

H. Only one inspection shall be required and performed by the Building Department for small residential rooftop solar energy systems eligible for expedited review unless additional inspections are determined necessary by the Building Official based on specific climatic, geographic and/or topographical conditions.

I. The inspection(s) shall be done in a timely manner and should include consolidated inspections. An inspection will be scheduled within two (2) business days of a request and the applicant shall be provided with a two-hour inspection window.

J. Inspections

1. All solar energy systems shall be inspected for compliance with the manufacturer's installation requirements and the California Electrical Code.

2. The systems shall be ready for inspection with all electrical equipment/components accessible and in clear view.

3. The County's Building Inspector shall have access to all parts of the system.
4. The permit, approved plans, and specifications shall be readily available on site at the time of inspection.
5. Any changes to approved plans must be reviewed and approved by the Building Department prior to scheduling the inspection.

K. If a small residential rooftop solar energy system fails inspection, a subsequent re-inspection is authorized and may include a re-inspection fee in accordance with the County's adopted fee schedule.

ORDINANCE NO. 2020- XX

AN ORDINANCE OF THE CITY OF NEVADA CITY AMENDING TITLE 15 OF THE NEVADA CITY MUNICIPAL CODE TO ADOPT THE 2019 CALIFORNIA BUILDING STANDARDS, WITH LOCAL AMENDMENTS

WHEREAS, the State of California revises its building standards on a triennial basis. The building standards are intended to regulate and govern the conditions and maintenance of all property, buildings, and structures by providing standards for supplied utilities, facilities, and other physical things and conditions essential to ensure that structures are safe, sanitary, and fit for occupancy and use.

WHEREAS, pursuant to Health and Safety Code Section 17958.5, et seq., a city may make such changes or modifications in the requirements contained in the provisions of the California Building Standards Codes, as are reasonably necessary because of local climatic, geological, or topographical conditions, and

WHEREAS, the City of Nevada City contracts with the County of Nevada for its building inspection services, making it desirable to have the same building standards and amendments applicable within the City of Nevada City as those applicable in the County, and

WHEREAS, the County of Nevada has reviewed and on November 12, 2019 has adopted by Ordinance 2019 California Building Standards, local amendments, and findings applicable to the unincorporated areas after review and report by the County Building Director; and

WHEREAS, the City Council of the City of Nevada City concurs with the adopted purpose, amendments and findings adopted therein and desires to adopt the same amendments to be applicable within the City boundaries upon the same findings, except as specified herein, leaving in effect those provisions of Title 15 having special application only to the City.

NOW, THEREFORE, THE CITY COUNCIL OF THE CITY OF NEVADA CITY HEREBY ORDAINS AS FOLLOWS:

SECTION 1: Legislative Purpose:

A. The State of California revises its building standards on a triennial basis. The building standards are intended to regulate and govern the conditions and maintenance of all property, buildings and structures by providing standards for supplied utilities, facilities and other physical things and conditions essential to ensure that structures are safe, sanitary, and fit for occupation and use.

B. It is the purpose and the intent of this Ordinance to make substantive revisions to Title 15 (Building and Construction) of the Nevada City Municipal Code to ensure conformity with the 2019 edition of the California Building Standards, to wit, the California Building Code and Division II Scope and Administration thereof, the California Residential Code, the California Green Building Standards Code, the California Plumbing Code, the California Electrical Code, the California Fire Code, the California Mechanical Code, the California Energy Code, the California Referenced Standards Code, the California Existing Building Code, the 2013 California Historical Building Code, the 1997 Uniform Housing Code, the 1997 Uniform Code for the Abatement of Dangerous Buildings, the 2015 International Swimming Pool and Spa Code, and the 2015 International Property Maintenance Code and modifications thereto as adopted by the County of Nevada and by the City of Nevada City herein. A copy of the 2019 edition of the California Building Standards and included Codes is on file in the Nevada County Building Department and available on-line.

C. Pursuant to Health and Safety Code Section 17958.5, *et seq*., local jurisdictions may make such changes or modifications in the requirements contained in the provisions of the California Building Standards Code, as are reasonably necessary because of local climatic, geological, or topographical conditions. Nevada County's amendments to the 2019 California Building Standards, which have been made in response to unique climatic, geological, or topographical conditions in Nevada County, are codified in Chapter V of the Nevada County Land Use and Development Code and by this Ordinance are adopted by the City of Nevada City with modifications applicable within the City's jurisdiction. Local amendments to the California Building Standards Code shall not become effective until the modifications and findings have been filed with the Building Standards Commission.

SECTION 2: Chapters 15.04 and 15.08 of the Nevada City Municipal Code are repealed and readopted as set forth in Exhibit "A", attached hereto and incorporated by such reference.

SECTION 3. Findings.

A. The City Council hereby finds and declares that the amendments to the 2019 California Building Standards, as codified in Chapter L-V of the Nevada County Land Use and Development Code and as modified herein, are reasonably necessary because of local climatic, geological, and topographical conditions, topographical variations and the high risk of forest fires within the City and County.

B. The City Council hereby finds and declares that this Ordinance is exempt from California Environmental Quality Act (CEQA) review pursuant to the CEQA guidelines, including §15378(b)(5) as an organizational or administrative governmental activity that will not result in direct or indirect physical changes to the environment, and §15060(c)(2) as an activity that does not create a potential for direct or reasonably foreseeable indirect physical change in the environment.

SECTION 4: Severability.

If any provision of this Ordinance is held unconstitutional or otherwise invalid, the remainder of the Ordinance shall not be affected thereby and shall remain in full force and effect.

SECTION 5: Effective Date.

This Ordinance shall become effective thirty (30) days after the adoption date thereof and within fifteen (15) days of passage of this Ordinance, the City Clerk shall publish this Ordinance or required summary thereof in The Union, a newspaper of general circulation.

Passed and Adopted at the regular meeting of the City Council of the City of Nevada City on the 22nd day of January, 2020 by the following vote:

AYES:

NOES:

ABSENT

ABSTAIN:

_____
Reinette Senum, Mayor

ATTEST:

_____
Niel Locke, City Clerk

Chapter 15.04

Sections:

15.04.005 Purpose.
15.04.010 Definitions.
15.04.015 California Codes adopted.
15.04.020 California amendments adopted.
15.04.023 Limit on discretion of building official
15/04.025 Copies of Codes and County amendments
15.04.030 Compliance with environmental health, zoning, encroachment requirements and other regulations.
15.04.031 Special rules applicable to building permits in City and Historical District.
15.04.035 Building Standards Board of Appeals.
15.04.040 Building Accessibility Standards Board of Appeals.
15.04.045 Work exempt from permit; building permit.
15.04.050 Work exempt from permit; building permit.
15.04.100 Savings clause

15.04.005 Purpose.

This Chapter is enacted for the purpose of providing minimum standards to safeguard life or limb, health, property and public welfare by regulating and controlling the design, construction, quality of materials, use and occupancy, location and maintenance of all buildings and structures, regulated equipment, grading and construction activities that result in a land disturbance on private property within this jurisdiction in conformity with the 2019 edition of the California Building Standards and consistent with and complementary to standards adopted by the County of Nevada. Nothing in the codes hereinafter adopted shall be construed to prevent any person from performing his own building, mechanical, plumbing or electrical work when performed with the permits in compliance with this Chapter.

15.04.010 Definitions.

For the purpose of this Chapter, the following terms and words used herein or in any of the codes or ordinances adopted by reference therein, unless the context directs otherwise, shall have the meaning ascribed to them by this Section:

"Board of appeals", "housing advisory" and "appeals board" and any other references to an appellate body in any of the uniform codes or County amendments adopted by reference by this Chapter mean such entities as may be designated by the city council of Nevada City by resolution.

"Building official", "administrative authority", "responsible official", "chief building inspector", "plumbing official", "mechanical official", "electrical official" and similar references to a chief administrative position mean the building official for Nevada County under contract to furnish such services to Nevada City or such other entity as the city council of Nevada City may designate, subject to the limitations on their discretion provided in Section 15.04.023.

"City", "agency" or "jurisdiction" means the City of Nevada City. "Clerk of this jurisdiction" means the city clerk. "Governing body", "legislative body", "city council", "council" or "appointing authority" means the city council of Nevada City. "Technical codes" means those codes and publications adopted by Nevada City containing the provisions for design, construction, alteration, addition, repair, removal, demolition, use, location, occupancy and maintenance of buildings and structures and building service equipment.

“County” means the County of Nevada.

15.04.015 California Codes adopted.

Subject to the modifications and amendments contained in this Chapter, the following codes and standards are adopted and incorporated into the Municipal Code of the City of Nevada City by reference and have the same legal effect as if set forth herein:

A. Division II, Scope and Administration, 2019 California Building Code.

B. The 2019 edition of the California Building Standards Code, known as the California Code of Regulations, Title 24, Part 12 (California Referenced Standards Code), in whole thereof.

C. The 2019 edition of the California Building Code, known as the California Code of Regulations, Title 24, Part 2 (California Building Code), incorporating the International Building Code, 2018 Edition, of the International Code Council, the whole thereof with State amendments, including appendixes “C”, “H”, “I” and “J” and amendments set forth in Article 3 of this Chapter.

D. The 2019 edition of the California Building Standards Code, known as the California Code of Regulations, Title 24, Part 9 (California Fire Code), incorporating the International Fire Code, 2018 Edition, of the International Code Council, the whole thereof with State amendments, save and except article 86 thereof, including appendix chapters and amendments set forth in Article 5 of this Chapter.

E. The 2019 edition of the California Building Standards Code, known as the California Code of Regulations, Title 24, Part 5 (California Plumbing Code), incorporating the Uniform Plumbing Code, 2018 Edition, of the International Association of Plumbing and Mechanical Officials, the whole thereof with State

amendments, including appendix chapters and amendments set forth in Article 7 of this Chapter.

F. The 2019 edition of the California Building Standards Code, known as the California Code of Regulations, Title 24, Part 4 (California Mechanical Code), incorporating the Uniform Mechanical Code, 2018 Edition, of the International Association of Plumbing and Mechanical Officials, the whole thereof with State amendments, including appendix chapters and amendments set forth in Article 8 of this Chapter.

G. The 2019 edition of the California Building Standards Code, known as the California Code of Regulations, Title 24, Part 3 (California Electrical Code), incorporating the National Electrical Code, 2017 Edition, of the National Fire Protection Association, the whole thereof with State amendments, including annex chapters and amendments set forth in Article 11 of this Chapter

H. The 2019 edition of the California Building Standards Code, known as the California Code of Regulations, Title 24, Part 2.5 (California Residential Code) incorporating the International Residential Code, 2018 Edition, of the International Code Council, the whole thereof with State Amendments, including appendixes “H”, “J”, “K”, “Q”, and “S” and amendments as set forth in Article 4 of this chapter.

I. The 2019 edition of the California Building Standards Code, known as the California Code of Regulation, Title 24, Part 11 (California Green Building Standards Code) in whole thereof, with State Amendments.

J. The 2019 edition of the California Building Standards Code, known as the California Code of Regulations, Title 24, Part 6 (California Energy Code) in whole thereof, with State Amendments.

K. The 2019 edition of the California Building Standards Code, known as the California Code of Regulations, Title 24, Part 8 (California Historical Building Code) in whole thereof, with State Amendments.

L. The 2019 edition of the California Building Standards Code, known as the California Code of Regulations, Title 24, Part 10 (California Existing Building Code), incorporating the International Existing Building Code, 2018 Edition, of the International Code Council, the whole thereof with State Amendments.

M. The 2018 International Property Maintenance Code, of the International Code Council.

N. The 1997 Uniform Code for the Abatement of Dangerous Buildings, of the International Conference of Building Officials.

O. The 1997 Uniform Housing Code, of the International Conference of Building Officials.

P. International Swimming Pool and Spa Code, 2018 Edition with the amendments set forth in Article 9 of this Chapter.

15.04.020 County amendments adopted.

Subject to the modifications and amendments contained in this Title, the Nevada County amendments to the 2019 California Building Standards adopted by Nevada County on November 12, 2019 are adopted and incorporated into the Municipal Code of the City of Nevada City by reference and have the same legal effect as if set forth herein. Excluded from this adoption shall the following provisions adopted by the County by for inclusion in the Nevada County Land Use and Development Code:

A. The County amendment in section L-V 5.7 in Chapter V, Article 5 providing for fire agency appeals to the Board of Supervisors;
B. The County amendments in Chapter V, Article 11 adopting more comprehensive exemptions from grading permit requirements for landform grading for agriculture; and
C. Any regulations regarding the construction of limited density owner-built dwellings contained in the California Code of Regulations, Title 25, Chapter 1, Article 8, which has not been adopted by the City.

15.04.023 Limit on discretion of building official.

Whenever in the building regulations it is provided that anything must be done with the approval of or subject to the direction of the Building Official, this shall be construed to give such officer only the discretion of determining whether the rules and standards established by this Chapter have been complied with, and no such provision shall be construed as giving that officer any discretionary powers as to what such regulations or standards should be where the effect would be to increase the cost or time to complete the project or the power to require conditions not prescribed by this Chapter or to enforce such rules and standards in an arbitrary or discriminatory manner. Where the work for which the building permit is issued involves the remodel, restoration, renovation or rehabilitation of an existing building or structure, the Building Official shall not review or require changes to existing conditions outside the scope of the work for which the permit is issued or required.

15.04.025 Copies of Codes and County and City amendments.

Pursuant to Nevada County Land Use and Development Code *Sec.* L-V 1.5, the Nevada County Building Department maintains on file copies of the Codes and Standards referred to in Section 15.04.010 of this Chapter. Copies of Nevada County Ordinance adopting the County amendments referred to in the preceding section are on file with the County of Nevada and shall be maintained at City Hall as well, together with copies of this City Ordinance.

15.04.030 Compliance with environmental health, zoning, encroachment requirements and other regulations prerequisite to a building permit.

In addition to the applicable requirements in Sec. L-V 1.7. A-D, of the Nevada County Land Use and Development Code, a sewer backflow prevention device is required for

property located in the City. A backflow device is required upon transfer of any parcel of real property within the City limits prior to close of escrow or transfer and upon issuance of a "final" of a building permit in accordance with the City of Nevada City adopted Resolution No. 2005-12.

In addition to the applicable requirements in Sec. L-V 1.7. A-D, subsection A of Sec, L-V 1.8 and Sec. L-V 1.9 of the Nevada County Land Use and Development Code, no grading or building permit shall be issued for property located in the City until the land use is approved by the City.

15.04.031 Special rules applicable to building permits in City and Historical District.

A. In addition to the applicable requirements in Sec. L-V 1.7. A-D, subsection A of Sec, L-V 1.8 and Sec. L-V 1.9 of the Nevada County Land Use and Development Code, no grading or building permit shall be issued for property located in the City until the land use is approved by the City.

B. By City Ordinance Nos. 338, 344, 365, 89-5 and 92-5, the City has designated a downtown Historical District deemed to be of importance to the history, architecture and culture of Nevada City and the buildings and properties therein shall be considered to be qualified historical buildings or properties for purposes of allowing alternate standards under the Historical Building Code to be applied to any work thereon, including without limitation, remodel, restoration, renovation and rehabilitation thereof. To encourage and promote such work and assure that it is not unduly restricted or delayed, the Building Official shall provide written notice to the City whenever any building permit is requested for buildings or properties within the Historical District and shall work with the City to facilitate timely completion, inspection and approval of such work and make no changes to a City-approved permit without prior written City approval.

15.04.035 Building and Accessibility Standards Board of Appeals.

A. In order to hear and decide appeals of discretionary orders, decisions or determinations made by the Building Official relative to the application and interpretation of the provisions of the technical codes or the Historical Building Code or relative to the enforcement of the California Access to Public Accommodations by Physically Disabled Persons regulations within the City, the city council may, on a case-by-case basis or for designated periods of time, 1) designate the Nevada County Building and Accessibility Standards Board of Appeals created pursuant to Section 113.1, as modified by Sec. L-V 2.1 of the Nevada County Land Use and Development Code, to act as the Nevada City Building and Accessibility Standards Board of Appeals; 2) create its own Building and Accessibility Standards Board of Appeals subject to the same regulations as a County Board with each council member appointing one member who is not an employee of the City and is qualified by experience and training to pass on the matters appealed, including, but not limited to building construction, building service equipment and grading, with each appointed member to serve at the pleasure of the appointing council member; or 3) proceed

as provided in subsection C hereof. The Building Official making the decision appealed from may be an ex officio member and serve as secretary to the Board of Appeals but shall have no vote in the matter.

B. The option for the city council to create its own Building and Accessibility Standards Board of Appeals for decisions relating to property and buildings within the City as provided herein shall be available as an alternative to the provisions adopted by the County for appeals regarding all codes adopted herein where the county adopted provisions refer back to Section L-V 2.1 or 2.2 of the Nevada County Land Use and Development Code, whether or not specifically provided for in this Article.

C. In order to hear and decide appeals of discretionary orders, decisions or determination made by the Building Official relative to the application and interpretation of the provisions of the Historical Building Code and alternative measures allowable thereunder, the city council may, on a case-by-case basis, either proceed as provided in subsection A or designate the Nevada City Planning Commission to act on such appeals.

15.04.040 Not used.

15.04.045 Work exempt from permit; building permits (amend).

The work exempted in paragraph 1 of section 105.2 is amended to read as follows rather than as amended by Sec. L-V 2.3 of the Nevada County Land Use and Development Code:

1. One-story detached accessory buildings without electrical, mechanical or plumbing not intended for habitation, subject to the requirements of Nevada City Municipal Code Sec. 17.80.010, provided it is less than or equal to no more than 160 square feet in area and the projected roof area does not exceed 200 square feet. One structure per parcel.

15.04.050 Work exempt from permit; building permits (add).

The work exempted in paragraph 14 of added to Section 105.2 by Sec. L-V 2.4 of the Nevada County Land Use and Development Code is amended to read as follows and that exempted in paragraph 15 added by Sec. L-V 2.5 of the Nevada County Land Use and Development Code is not adopted:

14. Detached trellis or arbor accessory to single family residential property provided it is no more than 160 square feet in area and the projected roof area does not exceed 200 square feet.

15.04.100 Savings clause.

The regulations set forth in this chapter are not intended to be exclusive and compliance therewith shall not excuse noncompliance with any other regulations pertaining to this chapter, set forth by the State of California or elsewhere in the City's

code.

Chapter 15.08

FIRESAFETY STANDARDS AND CALIFORNIA FIRE CODE AMENDMENTS

Sections:

15.08.005 Purpose.
15.08.010 Definitions.
15.08.015 California Fire Code and county amendments adopted.
15.08.020 Responsibility for enforcement and review.
15.08.025 Penalties.
15.08.030 Board of Appeals.
15.08.100 Savings clause

15.08.005 Purpose.

This Chapter prescribing regulations governing fire prevention is enacted to provide increased protection from fire to residents and property within the city of Nevada City in conformity with the 2019 edition of the California Building Standards and consistent with and complementary to standards adopted by the County of Nevada. It is also intended to encourage a greater degree of uniformity between the local fire department and other fire protection districts and departments in the imposition of fire safety regulations on new construction and existing buildings, while respecting the autonomy of the local fire protection districts and departments. Nothing in this Code is intended to amend the provisions regarding sprinkler systems set forth in section 8.30 of the Nevada City Municipal Code.

15.08.010 Definitions.

For the purpose of this Chapter, the following terms and words used herein or in any of the codes or ordinances adopted by reference therein, unless the context directs otherwise, shall have the meaning ascribed to them by this Section:

"Board of appeals" and any other references to an appellate body in any of the uniform codes or County amendments adopted by reference by this Chapter mean such entities as may be designated by the city council of Nevada City by resolution.

Chief', "fire chief", "city fire chief' and "chief of the fire department" mean the fire chief of the Nevada City Fire Department or his authorized designee.

"City", "agency" or "jurisdiction" means the City of Nevada City.

"Fire break" means a continuous strip of land upon which all rubbish, weeds, grass, or other growth that could be expected to burn when dry, has been abated or otherwise removed in order to prevent the surface extension of fire from one area to another.

15.08.015 California Fire Code and county amendments adopted.

Subject to the modifications and amendments contained in this Chapter, the 2019 California Fire Code and County amendments thereto were adopted by Sections 15.04.015 and 15.04.020 and incorporated into the Municipal Code of the City of Nevada City.

15.08.020 Responsibility for enforcement and review.

To clarify responsibility for enforcement and review as provided for in Nevada County Land Use and Development Coded Sec. L-V 5-4 within the City's jurisdiction:

A. Except as otherwise required by controlling state law, enforcement of fire safety laws, standards and regulations and review of projects for compliance therewith shall be enforced within the incorporated areas of the City by the city fire chief or the authorized representative thereof.

B. Whenever any application is made to the City for issuance of any discretionary land use permit or other land use entitlement, the City fire chief or authorized deputy, with enforcement responsibility pursuant to this Chapter, shall have the final authority and responsibility for review of such application for compliance with the requirements of this chapter. This review shall include the preparation of comments and appropriate mitigation measures and/or conditions of approval to assure compliance with all applicable fire safety laws, standards and regulations. To facilitate such review, copies of all such applications shall be promptly provided to the City fire chief or authorized deputy.

15.08.025 Appointment of fire marshal.

The amendment to the California Fire Code in sec. L-V 5.6 of Nevada County Land Use & Development Code is further amended within the City's jurisdiction to provide that the fire code official shall be appointed by the chief appointing authority of the jurisdiction and within the city's jurisdiction references to the County Fire Marshal shall refer to that appointed official.

15.08.030 Penalties.

In addition to the penalties provided for in the California Fire Code and in subsections

A and B of Sec. L-V 5.7 of the County amendments thereto are added the following:

C. Violations of any provisions of this chapter and the 2019 California Fire Code and County and City amendments thereto shall constitute a public nuisance and said conditions may be abated in accordance with existing laws and ordinances.

D. The remedies provided herein are not exclusive, and are in addition to any other remedy or penalty provided by law.

15.08.035 Fire Agency Appeals.

Provisions regarding appeals from determinations interpreting provisions of the California Fire Code made by the City fire chief shall be amended to read as follows rather than as amended by Sec. L-V 5.8 of the Nevada County Land Use and Development Code to supplement the basic requirements found in Section 108 the California Fire Code:

A Appeals from decisions to approve or not to approve permits pursuant to this Chapter or determinations interpreting provisions of the California Fire Code, as amended and adopted, made by the City fire chief regarding permits within the city, may be taken to the city council or the city council may, on a case-by-case basis or for designated periods of time, create its own Nevada City Fire Code Board of Appeals to hear the appeal with members nominated by the city fire chief in accordance with the member composition provisions set forth in Section A101.2, *et seq.,* of Appendix A of the California Fire Code, and as confirmed by the city council.

B. In the event a Nevada City Fire Code Board of Appeals is created to hear and decide an appeal, the City fire chief, or his designee, shall be an ex-officio member and serve as secretary to the Board, but shall have no vote on any matter before the Board and the decision and findings shall be rendered to the City fire chief with a duplicate copy to the appellant.

15.08.040 Open burning additional restrictions.

In addition to restrictions on burning in the California Fire Code and county amendments as adopted by the city, open burning is further restricted by Chapter 8.08 of the Nevada City Municipal Code.

15.08.045 Auxiliary power generator.

In addition to the requirements of Sec. 605.3.3 of the California Fire Code and county amendments as adopted by the City, any new structure or remodel that has electrical power supplied by a secondary or auxiliary power unit with automatic startup and/or automatic power transfer capabilities shall have an auxiliary power disconnect accessible to fire department personnel. The auxiliary power disconnect switch shall be

located within three (3) feet of the main power disconnect switch and identified with a permanently mounted, weather proof label marked “AUXILIARY POWER DISCONNECT”.

15.08.100 Savings clause.

The regulations set forth in this Chapter are not intended to be exclusive and compliance therewith shall not excuse noncompliance with any other regulations pertaining to this Chapter, set forth by the State of California or elsewhere in the City’s code.

REPORT TO CITY COUNCIL

City of Nevada City
317 Broad Street
Nevada City CA 95959
www.nevadacityca.gov

January 22, 2020

TITLE: Funding Plan for Nevada City's Identified Technological Hardware and Software Needs

RECOMMENDATION: Seeking Council approval of Nevada City's Funding Plan for Nevada City's identified technological hardware and software needs.

CONTACT: Catrina Olson, City Manager
Loree' McCay, Administrative Services Manager

BACKGROUND / DISCUSSION:
On September 11, 2019, the City Council directed staff to proceed with investigating the cost and funding options for the top five Citywide priority technological needs with attached timelines for implementation. Staff is seeking Council approval to move forward with the following attached (Exhibit A) recommended budgetary plans with the understanding that these needs may need to be reevaluated in the future as priorities and funds available may change.

City staff has attached an updated, prioritized list with estimated costs and timelines for implementation of the identified projects and recommends to set aside funds each year to be restricted for the specific use of funding the City's implementation and updating of technology. Staff recommends restricting $50k per year and the balance of the required funds to be considered in the proposed budgets each fiscal year.

ENVIRONMENTAL CONSIDERATIONS: Not applicable.

FISCAL IMPACT: Overall estimated cost of updates would be $354,000 spread over the course of 5 years

ATTACHMENTS:
- ✓ Exhibit A- Funding Plan for Technological Hardware and Software Needs

EXHIBIT A

City of Nevada City

Funding Plan for Technological Hardware and Software Needs

Priority	Tech Need	Department	Fund	Total Est. Cost	FY 19/20	FY 20/21	FY 21/22	FY 22/23	FY 23/24	# Years	Implementation
High	New Phone System	Citywide	*Various	$ 80,000.00	$ -	$ 40,000.00	$ 40,000.00	$ -	$ -	2	FY 21/22
High	3 additional laptops	Police	Prop 172 Fund	$ 9,000.00	$ 9,000.00	$ -	$ -	$ -	$ -	1	FY 19/20
High	New Mobile Radios for Utility Vehicles	Fire	Measure "C"	$ 10,000.00	$ -	$ 10,000.00	$ -	$ -	$ -	1	FY 20/21
High	Supervisory Control and Data Acquisition computer system	Water/Wastewater	Water	$ 60,000.00	$ -	$ 60,000.00	$ -	$ -	$ -	1	FY 20/21
				$ 159,000.00	**$ 9,000.00**	**$ 110,000.00**	**$ 40,000.00**	**$ -**	**$ -**		
Medium	Fiber Optics	Citywide	*Various	TBD							
Medium	New Financial/Operations Software	Finance & Admin	General	$ 100,000.00	$ -	$ 10,000.00	$ 30,000.00	$ 30,000.00	$ 30,000.00	4	FY 23/24
Medium	Upgrade to the mapping system	Public Works	*Various	$ 3,000.00	$ -	$ 3,000.00	$ -	$ -	$ -	1	FY 20/21
				$ 103,000.00	**$ -**	**$ 13,000.00**	**$ 30,000.00**	**$ 30,000.00**	**$ 30,000.00**		
Low	Key card access to PD	Police	General	$ 5,000.00	$ -	$ 5,000.00	$ -	$ -	$ -	1	FY 20/21
Low	Video recording equipment	Police	General	$ 2,000.00	$ 2,000.00	$ -	$ -	$ -	$ -		
Low	Report writing system upgrade	Police	General	$ 80,000.00	$ -	$ 20,000.00	$ 20,000.00	$ 20,000.00	$ 20,000.00	4	FY 23/24
Low	Drone	Police	General	$ 5,000.00	$ -	$ 5,000.00	$ -	$ -	$ -	1	FY 20/21
				$ 92,000.00	**$ 2,000.00**	**$ 30,000.00**	**$ 20,000.00**	**$ 20,000.00**	**$ 20,000.00**		
				$ 354,000.00	**$ 11,000.00**	**$ 153,000.00**	**$ 90,000.00**	**$ 50,000.00**	**$ 50,000.00**		

*Various-funds will be allocated to multiple funds (General, Water distribution, Sewer collection, Water, Sewer, etc.)

Totals by fund	TOTAL	FY 19/20	FY 20/21	FY 21/22	FY 22/23	FY 23/24
General	$ 192,000.00	$ 2,000.00	$ 40,000.00	$ 50,000.00	$ 50,000.00	$ 50,000.00
Various	$ 83,000.00	$ -	$ 43,000.00	$ 40,000.00	$ -	$ -
Measure "C"	$ 10,000.00	$ -	$ 10,000.00	$ -	$ -	$ -
Prop 172	$ 9,000.00	$ 9,000.00	$ -	$ -	$ -	$ -
Water	$ 60,000.00	$ -	$ 60,000.00	$ -	$ -	$ -

Totals by Priority						
High	$ 159,000.00	$ 9,000.00	$ 110,000.00	$ 40,000.00	$ -	$ -
Medium	$ 103,000.00	$ -	$ 13,000.00	$ 30,000.00	$ 30,000.00	$ 30,000.00
Low	$ 92,000.00	$ 2,000.00	$ 30,000.00	$ 20,000.00	$ 20,000.00	$ 20,000.00

Sierra Nevada Memorial
Hospital Foundation

Post Office Box 1810
140 Litton Drive, Suite 220
Grass Valley, CA 95945

RECEIVED
JAN 06 2020
CITY OF NEVADA CITY

December 31, 2019

Ms. Catrina Olson
City of Nevada City
317 Broad Street
Nevada City, CA 95959

Dear Ms. Olson and Staff,

It started with *your* generosity!

The board and staff at Sierra Nevada Memorial Hospital Foundation are deeply grateful to you for your thoughtful gift of $250.00 directed to our Breast Imaging Center Fund on 12/27/2019 thru the "Pink Patch" fundraiser. From the tiniest newborns to the eldest members of our community, everyone benefits when a community comes together to ensure access to preeminent care transforming the lives of patients and their families.

Sierra Nevada Memorial Hospital is *your* community hospital. We exist to serve you and your loved ones – to provide hope, healing and recovery. Your gift is extremely important because it provides resources that make an immediate impact and will help us through these interesting and tough times.

Ms. Olson and staff, thank you. With every gesture, with every gift, with every pledge, you're helping us be better. Let's continue working together. Let's continue caring for one another. Let's ensure that healthcare is at the forefront of our priorities. After all, we have nothing if not for our health.

If you are interested in learning more about the Hospital and Hospital Foundation, please contact me at (530) 477-9700 or kimberly.parker1@dignityhealth.org. Again thank you for helping us make a difference.

Your hospital for life,

Kimberly Parker

Kimberly Parker, CFRE
Executive Director

Thank you for being a part of the Pink Patch project

KP/jb

We are pleased to report that we have provided no goods or services in exchange for your gift. All gifts to the Hospital Foundation are tax deductible and stay local. Sierra Nevada Memorial Hospital Foundation is a 501(c)(3) non-profit corporation, tax ID 68-0005939.