REGULAR CITY COUNCIL MEETING
WEDNESDAY, MARCH 11, 2020

Closed Session - 6:15 PM
Regular Meeting - 6:30 PM

City Hall – Beryl P. Robinson, Jr. Conference Room
317 Broad Street, Nevada City, CA 95959

MISSION STATEMENT
The City of Nevada City is dedicated to preserving and enhancing its small town character and historical architecture while providing quality public services for our current and future residents, businesses and visitors.

Reinette Senum, Mayor
Duane Strawser, Council Member **Erin Minett, Vice Mayor**
David Parker, Council Member **Valerie Moberg, Council Member**

The City Council welcomes you to its meetings which are scheduled at 6:30 PM on the 2nd and 4th Wednesdays of each month. Your interest is encouraged and appreciated. This meeting is recorded on DVD and is televised on local public television Channel 17. Other special accommodations may be requested to the City Clerk 72 hours in advance of the meeting. Please turn off all cell phones or similar devices. Action may be taken on any agenda item. Agenda notices are available at City Hall. Materials related to an item on this Agenda submitted to the Council after distribution of the agenda packet are available for public inspection in the City Hall at 317 Broad Street, Nevada City, CA during normal business hours.

ANY MEMBER OF THE PUBLIC DESIRING TO ADDRESS THE COUNCIL ON ANY ITEM ON THIS AGENDA: After receiving recognition from the Mayor, give your name and address, and then your comments or questions. Please direct your remarks to the Councilmembers. In order that all interested parties have an opportunity to speak, please limit your comments to the specific item under discussion. All citizens will be afforded an opportunity to speak, consistent with their Constitutional rights. Time limits shall be at the Mayor's discretion. **IF YOU CHALLENGE** the Council's decision on any matter in court, you will be limited to raising only those issues you or someone else raised at the meeting or Public Hearing described on this agenda, or in written correspondence delivered to the City Council at, or prior to, the meeting or Public Hearing.

CLOSED SESSION: 6:15 PM

Under Government Code Section 54950 members of the public are entitled to comment on the closed session agenda before the Council goes into closed session.

1. Pursuant to Government Code Section 54956.9 the City Manager, Catrina Olson, City Attorney, Crystal Hodgson and Consulting Attorney, P. Scott Browne are requesting a closed session conference to confer on litigation involving the City in the case of Friends of Spring Street vs. Nevada City, et al., Nevada County Superior Court Case No. CIV 1304393, Appellate Case No. C081195.

REGULAR MEETING – 6:30 PM - Call to Order

Roll Call: Mayor Senum, Vice Mayor Minett, Council Members Moberg, Parker and Strawser

PLEDGE OF ALLEGIANCE

PROCLAMATIONS: "DeMolay Month" – March 2020

PRESENTATIONS:

BUSINESS FROM THE FLOOR

1. **PUBLIC COMMENT**
   Under Government Code Section 54954.3, members of the public are entitled to address the City Council concerning any item within the Nevada City Council's subject matter jurisdiction. Comments on items NOT ON THE AGENDA are welcome at this time. Normally, public comments are limited to no more than three minutes each. **Except for certain specific exceptions, the City Council is prohibited from discussing or taking action on any item not appearing on the posted agenda.**

2. **COUNCIL MEMBERS REQUESTED ITEMS, COMMITTEE REPORTS AND FUTURE AGENDA ITEMS:**

3. **CONSENT ITEMS:**
   All matters listed under the Consent Calendar are to be considered routine by the City Council and will be enacted by one motion in the form listed. There will be no separate discussion of these items unless, before the City Council votes on the motion to adopt, members of the Council, City staff or the public request specific items to be removed from the Consent Calendar for separate discussion and action.

   A. **Subject:** Accounts Payable Activity Report – February 2020
   Recommendation: Receive and file.

   B. **Subject:** Award of Contract for Commercial Street Phase 1 Water, Sewer and Storm Drain
   Recommendation: Pass Resolution 2020-XX, a Resolution of the City Council of the City of Nevada City to award a contract to CME Services in the amount of $454,613 plus $45,000 contingencies for Commercial Street Phase 1 Water, Sewer And Storm Drain Improvements in the form attached hereto as "Exhibit A," and incorporated herein by this reference, and authorize the Mayor to sign.

   C. **Subject:** City of Nevada City 3rd Quarter Sales Tax Update
   Recommendation: Receive and file.

   D. **Subject:** Proposed Nevada City Fire Preparedness Flyer
   Recommendation: Review proposed draft flyer and approve for printing and mailing.

   E. **Subject:** 34th Annual Spring Run Street Closure Request
   Recommendation: Review and authorize 34th Annual Spring Run street closure request per application.

   F. **Subject:** Action Minutes February 26, 2020 City Council Meeting
   Recommendation: Review and approve City Council Meeting Action Minutes of February 26, 2020.

4. DEPARTMENT REQUESTED ACTION ITEMS AND UPDATE REPORTS:

A. Subject: Updated Resolution 2020-XX, Authorization for Submittal of Applications to CalRecycle for Payment Programs
Recommendation: Pass Resolution 2020-XX, a Resolution of the City of Nevada City authorizing submittal of application to CalRecycle for payment programs and related authorizations.

B. Subject: Nevada City Chamber of Commerce Street Closure Requests
Recommendation: Review and authorize Nevada City Chamber of Commerce street closure requests per application.

C. Subject: Resolution 2020-XX Establishing a Nevada City Fire Safety Advisory Committee
Recommendation: Pass Resolution 2020-XX, a Resolution of the City of Nevada City, City Council establishing a Nevada City Fire Safety Advisory Committee.

D. Subject: Prop 68 Application Update and Pioneer Park Project List
Recommendation: Approve the updated Project List for Pioneer Park.

5. PUBLIC HEARINGS:

6. OLD BUSINESS:

A. Subject: Update Regarding the Consideration of Ordinance Amendments for the Regulation of Wireless Telecommunication Facilities in the City
Recommendation: Provide staff direction on whether or not to have the Consulting Attorney incorporate requested Ordinance amendments and continue a first reading of a draft Ordinance to March 25, 2020.

7. NEW BUSINESS:

A. Subject: Resolution 2020-XX, a Resolution of the City Council of the City of Nevada City Proclaiming a Local Emergency and Ratifying the Civil Defense and Disaster Council's Proclamation of a Local Emergency in the City of Nevada City and Request for Assistance Under the California Disaster Assistance Act
Recommendation: Pass Resolution 2020-XX, a Resolution of the City Council of the City of Nevada City Proclaiming a local emergency and ratifying the Civil Defense and Disaster Council's Proclamation of a local emergency in the City of Nevada City and request for assistance under the California Assistance Act.

B. Subject: Ordinance No. 2020-XX, Adding Section 2.04.030 "Conduct While Addressing the City Council" and Section 2.36.075 "Conduct While Addressing the Planning Commission" to the Nevada City Municipal Code
Recommendation: Waive reading of Ordinance, read by title only and introduce for first reading Ordinance No. 2020-XX, an Ordinance of the City of Nevada City adding Section 2.04.030 "Conduct While Addressing the City Council" and Section 2.36.075 "Conduct While Addressing the Planning Commission" to the Nevada City Municipal Code.

8. CORRESPONDENCE:

9. ANNOUNCEMENTS:

10. CITY MANAGER'S REPORT:

11. ADJOURNMENT

Certification of Posting of Agenda

I, Gabi Christakes, Administrative Services Technician/Deputy City Clerk for the City of Nevada City, declare that the foregoing agenda for the March 11th, 2020 Regular Meeting of the Nevada City City Council was posted March 6th, 2020 at the entrance of City Hall. The agenda is also posted on the City's website www.nevadacityca.gov.

Signed March 6th, 2020, at Nevada City, California

_____

Gabi Christakes, Administrative Services Technician/Deputy City Clerk

---

CITY OF NEVADA CITY
City Council
Long Range Calendar

March 11,2020	Regular Council Meeting
March 25, 2020	Regular Council Meeting
March 31, 2020	Holiday
April 8, 2020	Regular Council Meeting
April 22, 2020	Regular Council Meeting
May 13, 2020	Regular Council Meeting
May 25, 2020	Holiday
May 27, 2020	Regular Council Meeting
June 10, 2020	Regular Council Meeting
June 24, 2020	Regular Council Meeting

NOTE: This list is for planning purposes; items may shift depending on timing and capacity of a meeting.

NOTICE: *As presiding officer, the Mayor has the authority to preserve order at all City Council meetings, to remove or cause the removal of any person from any such meeting for disorderly conduct, or for making personal, impertinent, or slanderous remarks, using profanity, or becoming boisterous, threatening or personally abusive while addressing said Council and to enforce the rules of the Council.*

A PROCLAMATION ACKNOWLEDGING MARCH 2020 AS DEMOLAY MONTH IN NEVADA CITY

WHEREAS, DeMolay is a service and character-building organization of young men between the ages of 12 and 21; and

WHEREAS, these young men are seeking to prepare themselves to become better citizens and leaders for tomorrow; and

WHEREAS, DeMolay helps develop those traits of character which have strengthened good men in all ages; and

WHEREAS, the organization has carried out the aforementioned goals for one hundred years through programs of civic service, athletic competition, social activity, and charitable projects; and

WHEREAS, the North Star Chapter was recognized in Northern California during the last year as a leading chapter for philanthropic and community service activities; and

WHEREAS, the members of North Star Chapter of Nevada City will observe the year of 2020 as the 101st Anniversary of DeMolay and to exemplify to all citizens here and everywhere their many activities and to tender recognition to their millions of Senior DeMolays.

NOW, THEREFORE, I, Reinette Senum**,** Mayor of the City of Nevada City, proclaim that March 2020 be observed as DeMolay month in Nevada City and commend these young men, past and present, and call upon all our citizens to join in saluting the young men of North Star Chapter DeMolay, and in expressing our grateful appreciation for the fine example set by them in contributing to the welfare of our community.

IN WITNESS WHEREOF, I, Reinette Senum, Mayor have hereunder set my hand and caused the official seal of the City of Nevada City to be affixed on this 11th day of March 2020.

_____

Reinette Senum, Mayor

REPORT TO CITY COUNCIL

City of Nevada City
317 Broad Street
Nevada City CA 95959
www.nevadacityca.gov

March 11, 2020

TITLE: Accounts Payable Activity Report – February 2020

RECOMMENDATION: Receive and file.

CONTACT: Loree' McCay, Administrative Services Manager

BACKGROUND / DISCUSSION:
The attached Accounts Payable Activity Report includes all the cash disbursements associated with the citywide expenditures for the month of February 2020.

ENVIRONMENTAL CONSIDERATIONS: Not applicable.

FISCAL IMPACT: Varies Monthly

ATTACHMENTS:
- ✓ Accounts Payable Activity Report – February 2020

Period	Vendor # (Name)	Invoice Number	Invoice Date	Due Date	Disc. Terms	Gross Amount	Description
02-20	34T01 (34TH STREET CONSULTING)	2019-072	12/31/19	/ /		2150.00	COUNCIL GOVERNANCE TRAINING SESSION
02-20	ADV11 (ADVANTAGE GEAR, INC.)	27109	01/22/20	/ /		151.70	MEDALS
02-20	ALH02 (ALHAMBRA & SIERRA SPRINGS)	020620	02/06/20	/ /		39.59	DPW WATER
02-20	AMA00 (SYNCB/AMAZON)	444655783	01/02/20	/ /		37.92	KYSAR PHONE CASE
		456463386	12/26/19	/ /		47.68	HARD HATS
		464388848	12/17/19	/ /		14.08	LIGHTS
		468854649	12/30/19	/ /		59.55	HODGES UNIFORM ALLOWANCE
		477977677	12/11/19	/ /		21.31	BUSINESS CARD ORGANIZER
		479543656	02/03/20	/ /		60.38	HODGES UNIFORM ALLOWANCE
		584359697	12/30/19	/ /		538.78	PATROL FLASHLIGHTS & GLOVES
		669339758	01/07/20	/ /		103.52	HODGES UNIFORM ALLOWANCE
		686939753	12/30/19	/ /		60.40	PATROL GLOVES
		846874736	12/30/19	/ /		37.92	HODGES UNIFORM ALLOWANCE
		865588788	01/03/20	/ /		28.05	HODGES UNIFORM ALLOWANCE
			Vendor's Total ----->			1009.59	
02-20	AME19 (AMERICAN FIDELITY)	FEB 2020	02/19/20	/ /		823.98	STD/LTD BENEFITS FEB 2020
02-20	AME24 (AMERICAN UNITED LIFE INSURA	FEB 2020	02/10/20	/ /		452.98	LIFE INS 02/01-02/29/20
02-20	ANG01 (ANGELO, KILDAY & KILDUFF, L	37847	09/18/19	/ /		1799.78	LIABILITY CLAIM#NC033 F#GHC0022649 PARKS
		38023	11/21/19	/ /		4974.50	LIABILITY CLAIM#NC033 F#GHC0022649 PARKS
		38251	01/31/20	/ /		594.00	LIABILITY CLAIM#NC033 F#GHC0022649 PARKS
			Vendor's Total ----->			7368.28	
02-20	AQU01 (AQUA SIERRA CONTROLS INC)	30343	02/06/20	03/07/20	A	1058.00	240 GENSET
02-20	ARA01 (ARAMARK)	637221434	01/02/20	/ /		71.69	CITY HALL/DPW MATS
		637275273	01/30/20	/ /		71.69	CITY HALL/DPW MATS
		637275277	01/30/20	/ /		58.09	MATS/LINENS
			Vendor's Total ----->			201.47	
02-20	AT&15 (AT&T CALNET 3)	14296183	02/10/20	/ /		1028.56	01/10-02/09/20 BAN #9391023504
02-20	AT&16 (AT&T - WWTP)	129-22820	01/28/20	/ /		111.75	WWTP INTERNET SVC 01/29-02/28/20
02-20	ATO01 (A TO Z SUPPLY)	365968	01/24/20	02/23/20	A	374.42	G-5 BOX
		366363	02/06/20	03/07/20	A	70.25	BIG HEATER, HOSE BIBS
		366451	02/09/20	03/10/20	A	118.24	SUMP PUMP
		366472	02/09/20	03/10/20	A	25.80	SUMP PUMP RETURN
			Vendor's Total ----->			588.71	
02-20	B&C01 (B & C TRUE VALUE HOME CTR)	406228	01/22/20	02/21/20	A	18.14	PARKING METERS
		406336	01/23/20	02/22/20	A	38.13	RESTROOM
		406746	01/27/20	02/26/20	A	9.26	STREET SIGNS
		406747	01/27/20	02/26/20	A	63.46	SINK
		406808	01/28/20	02/27/20	A	104.45	STREET SIGNS
		407034	01/29/20	02/28/20	A	138.68	YARD MISC
		407259	01/31/20	03/01/20	A	15.29	PIPING SEAMANS
		407277	01/31/20	03/01/20	A	18.03	TOILET
		407634	02/04/20	03/05/20	A	79.70	BALLARDS
		407762	02/05/20	03/06/20	A	94.59	MISC
		408687	02/12/20	03/13/20	A	95.24	WALL REMODEL
		408693	02/12/20	03/13/20	A	2.14	WALL REMODEL
			Vendor's Total ----->			677.11	
02-20	BAN01 (JOHN PEKAREK, BANNER COMMUN	9256	01/28/20	02/27/20	A	683.55	HANDHELD RADIO BATTERIES
		9259	01/29/20	02/28/20	A	8.14	RADIO CLAMP
		36731	02/01/20	03/02/20	A	50.00	WTP RADIO REPEATERS JAN 2019
			Vendor's Total ----->			741.69	
02-20	BAN02 (TRISTIN BANKS)	0125-0207	02/11/20	/ /		120.00	FIRE INTERN SVCS 01/25-02/07/20

Period	Vendor # (Name)	Invoice Number	Invoice Date	Due Date	Disc. Terms	Gross Amount	Description
02-20	BLU05 (BLUE SHIELD OF CALIFORNIA)	MAR 2020	02/12/20	/ /		53774.33	HEALTH INS MAR 2020 INV#200430011434
02-20	BOR01 (BORGES & MAHONEY)	141640	01/24/20	02/23/20	A	862.95	CHLORINE SERVICE NEW HOSE & FITTING
		141670	02/05/20	03/06/20	A	98.99	CHLORINE HOSE FITTINGS
			Vendor's Total ----->			961.94	
02-20	BUC01 (BUCKMASTER OFFICE SOLUTIONS	387716	01/29/20	/ /		151.70	CONTRACT USAGE 12/29/19-01/28/20
02-20	BUS02 (BUSINESS CARD/B OF A VISA)	JAN 2020	02/06/20	/ /		3413.26	MISC DEPT PURCHASES 01/07-02/06/20
02-20	CAN03 (SYLVIA J. CANO)	012720	01/27/20	/ /		400.00	JANITOR VETS HALL JAN 2020
02-20	CAR03 (WALKER CARPENTER)	0111-0124	01/29/20	/ /		120.00	FIRE INTERN SVCS 01/11-01/24/20
		0126-0208	02/10/20	/ /		60.00	FIRE INTERN SVCS 01/26-02/08/20
			Vendor's Total ----->			180.00	
02-20	CHA14 (CHARTER MACHINE COMPANY)	0324462IN	01/29/20	/ /		3027.50	BELT PRESS BEARINGS
02-20	COM08 (COMCAST CABLE)	223120	01/27/20	/ /		100.16	DPW MNTHLY SVC INTERNET 02/02-03/01/20
02-20	COO01 (COOLER ZONE)	52955	02/01/20	/ /		49.00	COOLER RENTAL FEB 2020
02-20	COR08 (DAN CORTINOVIS)	320-6	01/31/20	/ /		640.00	PERMIT COMPLIANCE CONSULTING JAN 2020
02-20	COU06 (COUNTY OF NEVADA)	FEB 2020	02/04/20	03/05/20	A	9489.07	DISPATCH SVCS FEB 2020
		MAR 2020	02/19/20	03/20/20	A	9489.07	DISPATCH SVCS MAR 2020
			Vendor's Total ----->			18978.14	
02-20	COU23 (NEVADA COUNTY COLLECTIONS)	JAN 2020	02/10/20	03/11/20	A	3667.50	PARKING TIX/POC JAN 2020
02-20	CRA01 (CRANMER ENGINEERING, INC.)	GCB0055	01/31/20	03/01/20	A	217.00	WATER TESTING
		GCB0056	01/31/20	03/01/20	A	594.00	WATER TESTING
		GCB0057	02/13/20	03/14/20	A	26.50	WATER TESTING
		GCB0058	01/31/20	03/01/20	A	2586.80	WASTEWATER TESTING
			Vendor's Total ----->			3424.30	
02-20	CUR03 (CURTIS BLUE LINE)	INV354546	01/21/20	/ /		2066.15	NEW ENGINE EQUIP
02-20	DAT01 (DATA TICKET, INC.)	109961	02/13/20	03/14/20	A	1569.59	TICKET PROCESSING JAN 2020
02-20	DEL08 (DELTA INDUSTRIAL SOLUTIONS)	27835	01/07/20	/ /		1677.33	SUPPLIES
02-20	DEP06 (DEPT OF FORESTRY & FIRE)	1264698	02/03/20	/ /		5373.38	BROADCAST DISPATCH 2ND QTR FY 19/20
02-20	DEP13 (DEPARTMENT OF JUSTICE)	421177	12/04/19	/ /		98.00	FINGERPRINT APPS NOV 2019
02-20	DMC01 (DMCE CONCRETE &)	4008	02/07/20	03/08/20	A	99065.25	BOULDER ST SIDEWALK & RAILING THROUGH 01/31/
02-20	ECO01 (ECONOMY PEST CONTROL INC)	181101	01/29/20	02/28/20	A	294.00	WWTP PEST CONTROL JAN-MAR 2020
02-20	ELL03 (CHAD ELLIS)	021120	02/11/20	/ /		167.06	VAPE FOR CASE #CZ000063 SPIRITHOUSE
02-20	EW100 (TIMOTHY EWING)	020720	02/07/20	/ /		500.00	EWING UNIFORM ALLOWANCE
02-20	FAU01 (MICHAEL FAUDOA)	012920	01/29/20	/ /		81.36	UNIFORM ALLOWANCE
02-20	FER05 (FERGUSON ENTERPRISES, INC.)	1521717	01/23/20	/ /		144.68	BLOWER LINE REPAIR
		1522719	01/28/20	/ /		310.95	BLOWER LINE REPAIR
		1522719-1	01/31/20	/ /		38.16	BLOWER LINE REPAIR
			Vendor's Total ----->			493.79	

Period	Vendor #	(Name)	Invoice Number	Invoice Date	Due Date	Disc. Terms	Gross Amount	Description
02-20	FOS01	(FOSTER & SON HOSE & FITTING	72621	01/15/20	/ /		26.71	PLOW
02-20	GLO05	(GLOBAL MACHINERY INT. WEST	06034950	01/28/20	/ /		1341.92	VAC TRON FILTERS
02-20	GOL19	(GOLDEN STATE FLOW)	19-11-004	11/01/19	/ /		2144.94	WATER METER COVERAGE 11/16/19-11/15/20
02-20	GOL20	(GOLD COUNTRY WATER)	0127651	01/31/20	/ /		12.95	LAB WATER
02-20	GRA01	(GRAY ELECTRIC COMPANY)	051591	01/28/20	02/27/20	A	26.00	CITY HALL ALARM SVC FEB 2020
			051592	01/28/20	02/27/20	A	28.00	SEAMANS LDGE ALARM SVC FEB 2020
				Vendor's Total ----->			54.00	
02-20	GRA04	(GRAFIX SYSTEMS)	27701	01/29/20	/ /		2843.93	ENGINE LETTERING & STRIPING
02-20	GRA10	(GRAINGER)	942103281	01/23/20	02/22/20	A	91.57	CITY HALL MOPS
02-20	GRA14	(CITY OF GRASS VALLEY FIRE	DFD1019011	01/31/20	03/01/20	A	343.00	TRAINING
02-20	GRA19	(GRASS VALLEY SIGN COMPANY)	011520206	01/15/20	02/14/20	A	194.63	PARKING STICKERS
			129202010	01/29/20	02/28/20	A	74.34	PARKING METERS
				Vendor's Total ----->			268.97	
02-20	GRE17	(GREAT AMERICA FINANCIAL SVC	26450538	02/06/20	/ /		384.46	COPIERS CONTRACT 02/01-02/29/20
02-20	HIL02	(HILLS FLAT LUMBER CO.)	899276/1	01/28/20	02/27/20	A	258.91	CONCRETE
			913193/1	02/06/20	03/07/20	A	102.35	GARRETT UNIFORM ALLOWANCE
			K19260/1	02/11/20	03/12/20	A	694.55	NEW ENGINE EQUIPMENT
				Vendor's Total ----->			1055.81	
02-20	HIL10	(HILL BROTHERS CHEMICAL CO.)	07064251	01/29/20	/ /		5725.67	WWTP MAG
02-20	HIR00	(HIRERIGHT, LLC)	H0177211	01/31/20	/ /		163.25	NEW HIRE BACKGROUNDS JAN 2020
02-20	HOL06	(SHAWN HOLLAND)	0208-0221	02/25/20	/ /		1623.80	PAY PERIOD 02/08-02/21/20
			0222-0306	02/25/20	/ /		1842.88	FINAL PAYCHECK & VACA 02/22-03/06/20
				Vendor's Total ----->			3466.68	
02-20	HUN01	(HUNT & SONS, INC.)	434484	01/31/20	/ /		39.54	FD FUEL JAN 2020
02-20	INT07	(INTERSTATE SALES)	4307	01/15/20	02/14/20	A	9756.91	CROSSWALK LIGHTS
02-20	INT18	(INTERNATIONAL ASSOCIATION)	0092898	12/04/19	/ /		190.00	IACP MEMBER RENEW 01/01/20-12/31/20
02-20	JAV01	(JAVA JOHN'S)	290039	02/10/20	/ /		19.00	STRATEGIC PLANNING 02/10/20
02-20	JKA01	(JK ARCHITECTURE ENGINEERING	4990	02/06/20	/ /		1250.00	OLD AIRPORT CONSULTANT FEE FINAL PAYMENT
02-20	JON00	(JONES & MAYER)	013120	01/31/20	/ /		8855.00	LEGAL SVCS JAN 2020
02-20	LCA01	(LC ACTION POLICE SUPPLY)	Q#1	01/31/20	03/01/20	A	522.52	SAFETY EQUIP LOAN-ROHDE
			Q#2	01/31/20	03/01/20	A	522.52	SAFETY EQUIP LOAN-ROHDE
				Vendor's Total ----->			1045.04	
02-20	LEA04	(LEAGUE OF CALIF. CITIES)	628324	01/01/20	/ /		2626.00	LEAGUE DUES 01/01-12/31/20
02-20	LEH03	(HARLEY LEHMAN)	021120	02/11/20	/ /		1850.00	ROOF DEMO 775 ZION ST
02-20	LEX01	(RELX INC. DBA LEXIS NEXIS)	309243619	01/31/20	/ /		115.00	ONLINE ATTORNEY SVC JAN 2020

Period	Vendor # (Name)	Invoice Number	Invoice Date	Due Date	Disc. Terms	Gross Amount	Description
02-20	LIF01 (LIFE ASSIST)	971873	02/04/20	03/05/20	A	254.68	MED SUPPLIES
		971970	02/04/20	03/05/20	A	2346.52	MED SUPPLIES
		972060	02/05/20	03/06/20	A	22.80	MED SUPPLIES
		972676	02/07/20	03/08/20	A	116.95	MED SUPPLIES
		973064	02/10/20	03/11/20	A	40.08	MED SUPPLIES
			Vendor's Total ----->			2781.03	
02-20	MAT04 (MATCO CONSTRUCTION)	1775	02/05/20	/ /		12000.00	NEW ROOF 775 ZION ST
		021220	02/12/20	/ /		14000.00	NEW ROOF 775 ZION ST #2
		021520A	02/15/20	/ /		11500.00	NEW ROOF 775 ZION ST FINAL
		021520B	02/15/20	/ /		10344.00	NEW ROOF 775 ZION ST CHANGE ORDERS
			Vendor's Total ----->			47844.00	
02-20	MIN02 (ERIN MINETT)	013020	01/30/20	/ /		961.25	REIMB NEW MAYORS ACADEMY SAC 01/21-01/24/20
02-20	MIW01 (MIWALL CORPORATION)	8409	02/03/20	03/04/20	A	1182.50	PUBLIC SAFETY EQUIP-HOLDCROFT
02-20	NCT00 (NEVADA CO. DIGITAL MEDIA CE	1025)	02/06/20	/ /		580.00	VIDEO SVCS JAN 2020
		1026	02/06/20	/ /		750.00	PEG OPERATIONAL FEES Q3 FY 19/20
			Vendor's Total ----->			1330.00	
02-20	NEV02 (NEVADA IRRIGATION DISTRCT)	DEC 2019	12/24/19	01/23/20	A	36.00	BIANNUAL STANDBY 77 CEMENT HILL DEC 2019
		JUN 2019	06/25/19	07/25/19	A	36.00	BIANNUAL STANDBY 77 CEMENT HILL JUNE 2019
		0107*0204	02/04/20	03/05/20	A	20.91	WATER SVC 5 KIDDER 01/07-02/04/20 ACCT#38626
		0107+0204	02/04/20	03/05/20	A	31.94	WATER SVC 5 KIDDER 01/0-02/04/20 ACCT#38493-
		0107-0204	02/04/20	03/05/20	A	60.34	WATER SVC 201 PROV 01/07-02/04/20 ACCT#37256
		0107/0204	02/04/20	03/05/20	A	19.60	WATER SVC 201 PROV 01/07-02/04/20 ACCT#37398
			Vendor's Total ----->			204.79	
02-20	NEV06 (NEVADA CITY ENGINEERING)	28979	02/01/20	03/02/20	A	110.00	WATER SYSTEM PLAN UPDATES PROGRESS BILLING J
02-20	NEV11 (NEVADA COUNTY COLLECTIONS)	41725	01/28/20	/ /		451.00	REIMBURSEMENT PER DATA TICKET-ERROR IN PMNT
02-20	NOR30 (NORTH STATE CONSULTING)	20-01	02/03/20	/ /		5056.00	ENGINEER CONSULT JAN 2020
02-20	OFF06 (OFFICE DEPOT, INC.)	433606834	01/24/20	/ /		110.25	PAPER & SUPPLIES
		436405743C	01/31/20	/ /		110.25-	PAPER & SUPPLIES RETURN/CREDIT
		436422254	01/30/20	/ /		80.18	OFFICE PAPER
			Vendor's Total ----->			80.18	
02-20	OPE01 (OPEN SPATIAL CORP)	0956	02/03/20	/ /		4020.00	MAPPING 12/12/19-12/11/20
02-20	PAC02 (PACIFIC GAS & ELECTRIC)	123113120	02/04/20	03/05/20	A	1503.84	GAS SVC 12/31/19-01/31/20
02-20	PAU02 (DAN PAULUS)	020820	02/08/20	/ /		109.47	GARAGE DOOR REMOTE REIMB
02-20	PET01 (PETE'S WELDING & MACHINE)	121224	11/25/19	12/25/19	A	563.55	PLOW
02-20	PET02 (PETER SCHACK CONSTRUCTION E	PW-51)	02/13/20	/ /		3100.00	BLOWER INV # 3
		PW-52	02/11/20	/ /		19686.00	WATERLINE REPLACEMENT BOULDER ST
			Vendor's Total ----->			22786.00	
02-20	PIT04 (PITNEY BOWES POSTAGE BY PHO	020520	02/05/20	/ /		958.00	NOV&DEC 2019 UTILITY BILLING & GENERAL POSTA
02-20	PLA01 (PLAZA TIRE CO., INC.)	3246172	01/13/20	02/12/20	A	30.00	SKID STEER TIRE REPAIR
		3246313	01/21/20	02/20/20	A	1223.69	TIRES #42
		3246489	01/24/20	02/23/20	A	1822.99	MISC REPAIRS # 34
			Vendor's Total ----->			3076.68	
02-20	PLA13 (PLATT)	0B93732	01/31/20	/ /		17.54	LIGHT SWITCH
		0C02242	01/31/20	/ /		125.87	LIGHTS
			Vendor's Total ----->			143.41	

Period	Vendor # (Name)	Invoice Number	Invoice Date	Due Date	Disc. Terms	Gross Amount	Description
02-20	PRE05 (PREMIER ACCESS INSURANCE CO	MAR 2020	02/11/20	/ /		3679.90	DENTAL BENEFITS MAR 2020
02-20	RAN03 (RANEY PLANNING & MGMT, INC.	1984P-1	01/14/20	/ /		313.12	GALLELLI PROPERTY GSR INVESTORS $5K DEPOSIT
02-20	RAY01 (RAY MORGAN CO)	2859778	02/05/20	/ /		88.24	CONTRACT USAGE 01/01-01/31/20
02-20	REA00 (REAL GRAPHIC)	72203	01/31/20	/ /		30.38	PRINTS BRIDGE BATH/COMMERCIAL ST
02-20	REE02 (REED'S LOCKSMITHING, INC.)	4299	01/16/20	02/15/20	A	18.44	KEY, RING
		4335	01/31/20	03/01/20	A	14.65	WTP KEYS
		4350	02/05/20	03/06/20	A	9.76	KEYS
			Vendor's Total ----->			42.85	
02-20	REI06 (LORRAINE REICH, ATTORNEY)	020720	02/07/20	/ /		100.00	SL 02/02/20 PAYSTAR LORRAINE REICH
02-20	RIE02 (RIEBE'S NAPA AUTO PARTS)	857282	01/07/20	02/06/20	A	407.59	SHOP
		857679	01/10/20	02/09/20	A	32.40	SHOP
		858015	01/14/20	02/13/20	A	24.70	TRUCK MAINT # 31
		858061	01/14/20	02/13/20	A	14.27	OIL
		858076	01/14/20	02/13/20	A	14.27	FUEL CAP
		858079	01/14/20	02/13/20	A	33.52	OIL
		858198	01/15/20	02/14/20	A	21.02	AIR FILTER
		858242	01/16/20	02/15/20	A	10.33	#31
		858373	01/17/20	02/16/20	A	45.95	HEADLAMP
		858454	01/18/20	02/17/20	A	27.31	CAR WASH BRUSHES
		858595	01/21/20	02/20/20	A	3.35	WD40
		859459	01/29/20	02/28/20	A	13.80	SHOP
		859533	01/30/20	02/29/20	A	17.17	TOOLS
			Vendor's Total ----->			665.68	
02-20	RJR01 (RJ RICCIARDI, INC)	11563	12/31/19	/ /		2394.80	AUDIT SVC THROUGH 12/31/19
02-20	ROB03 (ROBINSON ENTERPRISES, INC.)	26719	01/30/20	02/29/20	A	4002.60	WWTP BIO-SOLIDS CUST #141130 INV #IN00026719
		20012375	01/31/20	03/01/20	A	696.53	DPW FUEL CUST#141100 INV#FI20012375
		20012377	01/31/20	03/01/20	A	167.55	WWTP FUEL CUST #141130 INV #FI20012377
		20012381	01/31/20	03/01/20	A	637.15	FD FUEL CUST#141217 INV#FI20012381
			Vendor's Total ----->			5503.83	
02-20	ROC03 (W. MARTIN ROCHE)	52	01/31/20	/ /		400.00	WTP/WWTP CONSULTING 01/01-01/31/20
02-20	SCH03 (JACK SCHAEFER)	0125-0207	02/09/20	/ /		120.00	FIRE INTERN SVCS 01/25-02/07/20
02-20	SEC01 (SECURE RECORD MANAGEMENT)	21264	02/04/20	/ /		50.00	RECORDS SHRED 01/15/20
02-20	SIE37 (SIERRA PLUMBING SUPPLY, INC	500388	02/03/20	03/04/20	A	59.38	FIELD DRAIN
02-20	SNI00 (SNIDER & ASSOCIATES)	4397	02/10/20	/ /		2429.71	STRATEGIC PLANNING FACILITATION 02/10/20
02-20	SNI01 (SNIDER EDUCATION & COMMUNIC	021020	02/10/20	/ /		1400.00	STRATEGIC PLANNING RECORDATION 02/10/20
02-20	SOL05 (SOLENIS LLC)	131581846	02/05/20	/ /		2836.90	BELT PRESS POLYMER
02-20	SPD01 (SPD MARKETS)	07705298	01/13/20	02/12/20	A	9.06	SEAMANS LDGE CLEANING SUPPLIES
		07709034	01/23/20	02/22/20	A	20.86	TRAINING SNACKS
		08504099	01/16/20	02/15/20	A	14.08	SCISSOR
			Vendor's Total ----->			44.00	
02-20	SPD02 (SPD SAW SHOP)	114620	01/07/20	02/06/20	A	49.84	FUEL MIX
02-20	SPE07 (SPECIAL T's)	5900	01/31/20	/ /		459.72	HATS
02-20	STE12 (STERICYCLE, INC.)	300498232	02/01/20	/ /		22.32	SHARPS MNTHLY COLECTION/MED WSTE FEB 2020

Period	Vendor # (Name)	Invoice Number	Invoice Date	Due Date	Disc. Terms	Gross Amount	Description
02-20	SUN01 (SUNRISE ENVIRONMENTAL)	105414	01/24/20	02/23/20	A	350.71	RAGS
		105576	01/31/20	03/01/20	A	297.25	SUPPLIES
			Vendor's Total ----->			647.96	
02-20	SWR01 (SWRCB)	LW1024915	12/09/19	01/08/20	A	7570.20	STATE COMPLIANCE FEES 07/01/19-06/30/20
02-20	TES02 (TESCO CONTROLS, INC.)	0069404IN	01/23/20	/ /		2590.00	SCADA SERVICE
		0069406IN	01/23/20	/ /		2700.00	SCADA MAINTENANCE
			Vendor's Total ----->			5290.00	
02-20	THA01 (THATCHER COMPANY OF CA., IN	272079	01/15/20	/ /		4191.73	CHLORINE
		272080C	01/15/20	/ /		2216.00-	CHLORINE RETURN
			Vendor's Total ----->			1975.73	
02-20	THE10 (THE AUTO SHOP)	28455	12/31/19	/ /		78.03	#26 OIL CHANGE
		28731	02/03/20	/ /		685.12	#26 REPAIR
		28743	02/03/20	/ /		422.90	#27 TRANSMISSION
			Vendor's Total ----->			1186.05	
02-20	TRO04 (TROPHIES ANYONE?)	472445	02/04/20	/ /		85.75	CITY ATTORNEY PLAQUE
02-20	UNI01 (THE UNION)	I00498829	11/07/19	12/07/19	A	50.00	FACILITY RENTAL AD #498829-01
		I00503686	11/21/19	12/21/19	A	210.00	FACILITY RENTAL AD #503686-01
		I00510146	12/05/19	01/04/20	A	50.00	FACILITY RENTAL AD #510146-01
		I00523342	01/09/20	02/08/20	A	50.00	FACILITY RENAL AD #523342-01
		I00540069	02/06/20	03/07/20	A	50.00	FACILITY RENTAL AD #540069-01
			Vendor's Total ----->			410.00	
02-20	UPS01 (UPS STORE 5417/DJE CONSULTA	22635	01/03/20	/ /		28.39	THOMPSON REUTERS RETURN POSTAGE
		22652C	01/03/20	/ /		4.49-	DOJ POSTAGE CREDIT
		22684	01/06/20	/ /		15.86	DOJ POSTAGE
		22758	01/08/20	/ /		13.13	AXON POSTAGE
		23114	01/27/20	/ /		13.38	DOJ POSTAGE
		23170	01/29/20	/ /		10.44	DOJ POSTAGE
		23218	01/31/20	/ /		22.13	CL17 REPAIR SHIPPING
			Vendor's Total ----->			98.84	
02-20	USA01 (USA BLUE BOOK)	128451	01/28/20	02/27/20	A	199.14	LEAD WASHERS CHLORINE GAS
02-20	VER01 (VERIZON WIRELESS)	PD JAN20	01/23/20	/ /		114.03	FD IPAD 12/24/19-01/23/20 INV#9847030801
		PD JAN20	01/23/20	/ /		818.55	PD CELL SVC 12/24/19-01/23/20 INV#9847030799
		DPW JAN20	01/23/20	/ /		76.02	DPW IPAD MAPPING 12/24/19 01/23/20 INV#98470
			Vendor's Total ----->			1008.60	
02-20	VSP00 (VISION SERVICE PLAN-(CA))	FEB 2020	01/19/20	/ /		565.07	VISION BENEFITS FEB 2020
02-20	WAL01 (WALKER'S OFFICE SUPPLY)	2092219-0	01/24/20	02/23/20	A	469.81	TABLE
		2094093-0	01/29/20	02/28/20	A	29.97	MISC OFFICE SUPPLIES
		2095068-0	02/04/20	03/05/20	A	29.02	OFFICE SUPPLIES
		2095918-0	02/06/20	03/07/20	A	37.08	OFFICE SUPPLIES
			Vendor's Total ----->			565.88	
02-20	WEC01 (WECO INDUSTRIES, INC.)	0044913IN	01/20/20	02/19/20	A	636.69	SEWER MAINT
		0044965IN	01/31/20	03/01/20	A	326.26	SEWER
			Vendor's Total ----->			962.95	
02-20	WIL02 (WILLIAMS STATIONERY)	0142475	02/04/20	03/05/20	A	4.76	OFFICE SUPPLIES
02-20	\M002 (JUDY MCLEOD)	000C00201	01/07/20	/ /		160.00	MQ CUSTOMER REFUND FOR MCL0002
			Total of Purchases ->			394930.80	

REPORT TO CITY COUNCIL

City of Nevada City
317 Broad Street
Nevada City CA 95959
www.nevadacityca.gov

March 11, 2020

TITLE: Award of Contract for Commercial Street Phase 1 Water, Sewer and Storm Drain

RECOMMENDATION: Pass Resolution 2020-XX, a Resolution of the City Council of the City of Nevada City to award a contract to CME Services in the amount of $454,613 plus $45,000 contingencies for Commercial Street Phase 1 Water, Sewer And Storm Drain Improvements in the form attached hereto as "Exhibit A," and incorporated herein by this reference, and authorize the Mayor to sign.

CONTACT: Bryan K. McAlister, City Engineer

BACKGROUND/DISCUSSION:
City Engineering and Public Works staff identified areas where Street Improvements and Water, Sewer and Storm Drain Improvements are needed on Commercial Street within the Downtown Historic District. The project consists of new water and sewer pipe and services for replacement of aging infrastructure and storm drain improvements, as further shown and described in the contract. Upon completion of this phase of the project (Phase 1) during spring/ summer of 2020, the City will rehabilitate sidewalks and pavement (Phase 2) which is expected to be done in fall/winter 2020. The project includes funding by Senate Bill 1 (SB 1), the Road Repair and Accountability Act of 2017 for storm drain and street improvements; and City funds for replacement of water and sewer. This project was prioritized for SB1 funding by City Council Resolution 2019-16.

City staff solicited bids for Commercial Street Phase 1 Water, Sewer and Storm Drain Improvements from local contractors. Qualified bids received are as follows:

- CME Services $ 454,613
- Hansen Bros., Grass Valley CA $ 626,653
- PSCE, Brownsville CA $ 746,036
- C&D Construction $ 525,553

CME Services was selected as the lowest responsive and responsible bidder.

FISCAL CONSIDERATIONS: The project will be funded a funded as authorized by SB 1 and matching Measure "S" funds for storm drain and street improvements and by fiscal year 2019/2020 water and sewer fund appropriations.

ATTACHMENT:
- ✓ Resolution 2020-XX, a Resolution of the City of Nevada City to Award a Contract to CME Services for Commercial Street Phase 1 Water, Sewer and Storm Drain and Authorize the Mayor to Sign
- ✓ Contract for Commercial Street Phase 1 Water, Sewer and Storm Drain in Nevada City

RESOLUTION NO. 2020- XX

A RESOLUTION OF THE CITY COUNCIL OF THE CITY OF NEVADA CITY TO AWARD A CONTRACT TO CME SERVICES FOR COMMERCIAL STREET PHASE 1 WATER, SEWER AND STORM DRAIN AND AUTHORIZE THE MAYOR TO SIGN

WHEREAS, City Engineering and Public Works staff identified areas where Street Improvements and Water, Sewer and Storm Drain Improvements are needed on Commercial Street within the Downtown Historic District; and

WHEREAS, The City of Nevada City provides maintenance of the water distribution system, wastewater collection system and street drainage system which includes replacement and repair of aging infrastructure; and

WHEREAS, Senate Bill 1 (SB 1), the Road Repair and Accountability Act of 2017 (Chapter 5, Statutes of 2017) was passed by the Legislature and Signed into law by the Governor in April 2017 to address the significant multi-modal transportation funding shortfalls statewide; and

WHEREAS, the City of Nevada City adopted by Resolution 2019-16 a list of all projects proposed to receive funding from the Road Maintenance and Rehabilitation Account (RMRA), created by SB 1, which included Commercial Street; and

WHEREAS, City has caused to be prepared certain plans, specifications and other contract documents pertaining to the Commercial Street Phase 1 Water, Sewer And Storm Drain Improvements; and

WHEREAS, consistent with Municipal Code requirements, City staff advertised and received bids for Commercial Street Phase 1 Water, Sewer And Storm Drain Improvements in Nevada City.

WHEREAS, the Commercial Street Phase 1 Water, Sewer And Storm Drain Improvements project will be funded as authorized by SB 1 and matching Measure “S” funds for storm drain and street improvements and by fiscal year 2019/2020 water and sewer fund appropriations; and

NOW, THEREFORE, BE IT RESOLVED by the City Council of the City of Nevada City to award a contract to CME Services in the amount of $454,613 plus $45,000 contingencies for Commercial Street Phase 1 Water, Sewer And Storm Drain Improvements in the form attached hereto as "Exhibit A," and incorporated herein by this reference, and authorize the Mayor to sign.

PASSED AND ADOPTED at the regular meeting of the City Council of the City of Nevada City on the 11th day of March, 2020, by the following vote:

AYES:

NOES:

ABSENT:

ABSTAIN:

_____

Reinette Senum, Mayor

ATTEST:

_____

Niel Locke, City Clerk

EXHIBIT A

COMMERCIAL STREET

PHASE 1

WATER, SEWER AND STORM DRAIN

City of Nevada City, 95959
Nevada County, California

Bryan K. McAlister
PE C58570
PLS 9199

William J. Falconi
PE 25842
PLS 4911

NOTICE TO CONTRACTOR'S

Commercial Street Phase 1 Water, Sewer and Storm Drain

Sealed proposals for Commercial Street Phase 1 Water, Sewer and Storm Drain will be received by the City at City Hall, 317 Broad Street, Nevada City, California, 95959, until **3:00 PM on March 5th, 2020,** at which time, or as soon thereafter as practicable, all such proposals will be publicly opened and read at City Hall, 317 Broad Street, Nevada City, California.

Bids shall be enclosed and sealed in an envelope addressed to the City of Nevada City at the above stated address and shall be marked "Commercial Street Phase 1 Water, Sewer and Storm Drain" No Bid Bonds are required.

The work includes the furnishing of all labor, materials, and equipment required for the job in accordance with the plans, specifications and other contract documents as set forth by the City Engineer. Such bid documents will be on file with the City staff and are available for inspection during office hours. Bid documents may be obtained at the office of said City Hall at 317 Broad Street, Nevada City, California on or after February 11, 2020.

There is a mandatory pre-bid meeting for this project at 9:00 AM on February 19th, 2020 at City Hall at 317 Broad Street. We will meet briefly at City Hall then will walk to the site.

****

The City reserves the right to reject all bids; or to accept any portion of bid schedule; to reject any bid which is incomplete or irregular; to determine which proposal is, in its judgment, the lowest responsible bid of a responsible bidder and to waive any informality or minor irregularity of any bid.

DATED: February 11, 2020

CITY OF NEVADA CITY

Bryan McAlister

Bryan McAlister, P.E.

City Engineer

Forms required for Bid Proposal

In accordance with provisions of State Funded projects, the contractor shall provide these forms at time of bid:

- Signed Bid Proposal
- Bid Schedule
- Bidder's List of Subcontractors (DBE and Non-DBE)
- Exhibit 15-H DBE Information (provide this form even if there are no DBE subcontractors)
- Public Contract Code Section 10285.1 Statement
- Public Contract Code Section 10162 Questionnaire

The above listed documents, General Conditions and all State Labor Code requirements in effect at the time of bid are considered part of the Bid Proposal and Contract Agreement.

PROPOSAL/CONTRACT

COMMERCIAL STREET PHASE 1 WATER, SEWER AND STORM DRAIN, Nevada City, CA

TO: City of Nevada City, City Hall, Nevada City, California.

The undersigned, as a bidder, submits the following proposal for the COMMERCIAL STREET PHASE 1 WATER, SEWER AND STORM DRAIN in the City of Nevada City, California, and offers to perform all work and furnish all labor, materials, tools, equipment, power and water as required for the completion of said project, in accordance with the plans, specifications and all other contract documents. The bidder has inspected the project site and has examined all conditions affecting the proposed work. The bidder is licensed with Contractors State License Board and is registered as a public works contractor with the Department of Industrial Relations as required to bid on this contract.

If this bid is accepted, the bidder agrees to execute the Agreement, and furnish to the City all documents and evidences of insurance, within ten (10) days after receiving written notice of the award of contract, and complete the project within **sixty (60) working days** after receiving written notice to proceed. **No bid bond is required for this project.**

Attached to this bid and made a part hereof is a list of proposed subcontractors, setting forth all information required by Section 4104 of the Government Code.

The undersigned is (state whether individual, partnership or corporation) SOLE PROP.

DATED: 3-5-20

FIRM NAME: CME SERVICES BY: S.K Clt
Signature of Authorized Person

ADDRESS: 900 GOLDEN GATE TERRACE, GV. 95945 Contact Person: KIRK

PHONE: 530-913-2707 530-272-7841

CELL PHONE: SAME

CONTRACTOR'S #: A 655792

EXPIRATION: 10-31-20

NEVADA CITY BUSINESS LICENSE #:

15280 EXPIRATION: 7-31-20

PUBLIC CONTRACT CODE SECTION 10285.1 STATEMENT

In conformance with Public Contract Code Section 10285.1 (Chapter 376, Stats. 1985), the bidder hereby declares under penalty of perjury under the laws of the State of California that the bidder has_____ , has not _____ been convicted within the preceding three years of any offenses referred to in that section, including any charge of fraud, bribery, collusion, conspiracy, or any other act in violation of any state or Federal antitrust law in connection with the bidding upon, award of, or performance of, any public works contract, as defined in Public Contract Code Section 1101, with any public entity, as defined in Public Contract Code Section 1100, including the Regents of the University of California or the Trustees of the California State University. The term "bidder" is understood to include any partner, member, officer, director, responsible managing officer, or responsible managing employee thereof, as referred to in Section 10285.1.

Note: The bidder must place a checkmark after "has" or "has not" in one of the blank spaces provided. The above Statement is part of the Proposal. Signing this Proposal on the signature portion thereof shall also constitute signature of this Statement. Bidders are cautioned that making a false certification may subject the certifier to criminal prosecution.

PUBLIC CONTRACT CODE SECTION 10162 QUESTIONNAIRE

In conformance with Public Contract Code Section 10162, the Bidder shall complete, under penalty of perjury, the following questionnaire:

Has the bidder, any officer of the bidder, or any employee of the bidder who has a proprietary interest in the bidder, ever been disqualified, removed, or otherwise prevented from bidding on, or completing a federal, state, or local government project because of a violation of law or a safety regulation?

Yes (No)

If the answer is yes, explain the circumstances in the following space.

LIST OF SUBCONTRACTORS

NAME (DBE Y/N)	PLACE OF BUSINESS CONTRACTORS LICENSE	PORTION OF WORK
1. CUTTING ADVANCES	LAKE OF THE PINES 487562 C-61	SAW CUTTING
2.		
3.		
4.		
5.		
6.		
7.		
8.		
9.		
10.		

BID SCHEDULE

CITY OF NEVADA CITY
COMMERCIAL STREET PHASE 1 WATER, SEWER AND STORM DRAIN

No.	Quantity	Unit	Item Description	Unit Price	Total Price
1.)	1	LS	Mobilization	$ 23,800	$ 23,800
2.)	1	LS	Traffic Control	$ 6500	$ 6500
3.)	520	LF	8" C900 Waterline	$ 95.00	$ 49,400
4.)	60	LF	6" C900 Waterline	$ 108.00	$ 6480
5.)	9	EA	8' Gate Valve Assembly	$ 3600	$ 32,400
6.)	2	EA	6"' Gate Valve Assembly	$ 2095	$ 4190
7.)	2	EA	4" Fire Service Line with Valve	$ 6323	$ 12,646
8.)	2	EA	Fire Hydrant Assembly w Valve	$ 9070	$ 18,140
9.)	2	EA	1-/2" Water Service Assembly	$ 5034	$ 10,068
10.)	14	EA	1" Water Service Assembly	$ 2258	$ 31,612
11.)	420	LF	8" SDR35 Sewerline	$ 85	$ 35,700
12.)	180	LF	6" SDR35 Sewerline	$ 52.00	$ 9360
13.)	3	EA	Sewer Manhole	$ 7500	$ 22,500
14.)	3	EA	Sewer Main Cleanout	$ 1067	$ 3201
15.)	11	EA	Sewer Service with Cleanout	$ 1089	$ 11,979

Bid Schedule Page 1

BID SCHEDULE (cont.)

CITY OF NEVADA CITY
COMMERCIAL STREET PHASE 1 WATER, SEWER AND STORM DRAIN

16.)	330	LF	18" HDPE Storm Drain	$ 104	$ 34,320
17.)	60	LF	12" HDPE Storm Drain	$ 123	$ 7380
18.)	1	EA	Junction Structure	$ 15,000	$ 15,000
19.)	3	EA	Type GO Curb Inlet	$ 7600	$ 22,800
20.)	1	EA	Junction Structure	$ 0	$ 0
21.)	1	EA	Storm Drain Manhole	$ 7800	$ 7800
22.)	4	EA	Roof Drain w Cleanout	$ 2208	$ 8832
23.)	340	LF	Comm Line 2-2" Conduit	$ 25	$ 8500
24.)	2	EA	Comm Box Type 1730	$ 2882	$ 5764.00
25.)	70	TN	Asphalt Trench Resurfacing	$ 380	$ 26,600
26.)	600	SF	Sidewalk Replacement	$ 44	$ 26,400
	1		PAYMENT BOND	13,241	13,241

TOTAL: $ 454,613

Note
1. Project shall be prevailing wages.
2. Unit price for pipe (water, sewer, storm drain) shall include all trench plates, shoring, abandonments or removal of existing pipe, potholing, sawcutting, fittings, staging/ bypass facilities, connections, excavation, bedding, backfill and testing.
3. Unit price for water service shall include all labor and materials to connect to existing service. Water Meter to be supplied by the City. All other materials and meter boxes to be provided by the contractor.
4. Unit price for trench resurfacing shall include **T-grind** and asphalt paving, surface preparation and compaction of agg. base.

Bid Schedule Page 2

EXHIBIT 15-H: DBE INFORMATION - GOOD FAITH EFFORTS

Project: COMMERCIAL STREET PHASE 1 WATER, SEWER AND STORM DRAIN

The City of Nevada City established a Disadvantaged Business Enterprise (DBE) goal of 3.0% for this project. The information provided herein shows that a good faith effort was made.

Lowest, second lowest and third lowest bidders shall submit the following information to document adequate good faith efforts. Bidders should submit the following information even if the "Local Agency Bidder DBE Commitment" form indicates that the bidder has met the DBE goal. This will protect the bidder's eligibility for award of the contract if the administering agency determines that the bidder failed to meet the goal for various reasons, e.g., a DBE firm was not certified at bid opening, or the bidder made a mathematical error.

Submittal of only the "Local Agency Bidder DBE Commitment" form may not provide sufficient documentation to demonstrate that adequate good faith efforts were made.

The following items are listed in the Section entitled "Submission of DBE Commitment" of the Special Provisions:

A. The names and dates of each publication in which a request for DBE participation for this project was placed by the bidder (please attach copies of advertisements or proofs of publication):

Publications	Dates of Advertisement
DBE GOOD FAITH.	3.2-20
	TO DATE

B. The names and dates of written notices sent to certified DBEs soliciting bids for this project and the dates and methods used for following up initial solicitations to determine with certainty whether the DBEs were interested (please attach copies of solicitations, telephone records, fax confirmations, etc.):

Names of DBEs Solicited	Date of Initial Solicitation	Follow Up Methods and Dates
SEE ATTACHED		

C. The items of work which the bidder made available to DBE firms including, where appropriate, any breaking down of the contract work items (including those items normally performed by the bidder with its own forces) into economically feasible units to facilitate DBE participation. It is the bidder's responsibility to demonstrate that sufficient work to facilitate DBE participation was made available to DBE firms.

Items of Work	Bidder Normally Performs Item (Y/N)	Breakdown of Items	Amount ($)	Percentage Of Contract
PAVING, EXCAVATION,		CONCRETE ~~STRU~~ STRUCTURES		

D. The names, addresses and phone numbers of rejected DBE firms, the reasons for the bidder's rejection of the DBEs, the firms selected for that work (please attach copies of quotes from the firms involved), and the price difference for each DBE if the selected firm is not a DBE:

Names, addresses and phone numbers of rejected DBEs and the reasons for the bidder's rejection of the DBEs:

SEE ATTACHED

Names, addresses and phone numbers of firms selected for the work above:

E. Efforts made to assist interested DBEs in obtaining bonding, lines of credit or insurance, and any technical assistance or information related to the plans, specifications and requirements for the work which was provided to DBEs:

NO

F. Efforts made to assist interested DBEs in obtaining necessary equipment, supplies, materials or related assistance or services, excluding supplies and equipment the DBE subcontractor purchases or leases from the prime contractor or its affiliate:

NO REQUEST

G. The names of agencies, organizations or groups contacted to provide assistance in contacting, recruiting and using DBE firms (please attach copies of requests to agencies and any responses received, i.e., lists, Internet page download, etc.):

Name of Agency/Organization	Method/Date of Contact	Results
	SEE ATTACHED	

H. Any additional data to support a demonstration of good faith efforts (use additional sheets if necessary):

NOTE: USE ADDITIONAL SHEETS OF PAPER IF NECESSARY.

1 **Location:** Moreno Valley, CA

More News & Events »

Order Details

Review & edit your order, download outreach documentation and logs, and much more.

Notice Type

Focus Journal Ad ▼

Edit Logs

CME Services

Is seeking qualified DBEs

Project Name
Commercial street phase 1 water, sewer, and storm drain

Bid/Contract #
"_____"

Awarding Agency
City of Nevada City

Project Location
Nevada City, CA County, CA

Bid Date
03/05/2020 at 03:00

Project Details

Get in Touch

Outreach Coordinator
Errol Kirk Christman

Project Estimator
kirk

Telephone
(530) 913-2707

we seeking quotes for trucking , import / export materials
material suppliers , rental equipment , paving.

Plans and specs can be found on City of Nevada City.com
Sub Contractors must have current license for their trade .
one million in insurance coverage.

Fax
(530) 274-2792

Address
900 Golden Gate Terrace, suite D
Grass Valley, CA 95945

Send a message

How to get in touch

Outreach Coordinator
Errol Kirk Christman

Project Estimator
kirk

Telephone
(530) 913-2707

Fax
(530) 274-2792

Address
900 Golden Gate Terrace, suite D
Grass Valley, CA 95945

Send a message

16 **Location:** Austin, TX

More News & Events »

Outreach Logs

Review and download the detailed soliciation logs for your Commercial street phase 1 water, sewer, and storm drain outreach effort

Basic Log (PDF) Detailed Log (CSV)

Filter List

CE GREEN INC.

FOLSOM, CA

Tel. (916) 365-4925
Fax (916) 374-7998
carole@cegreeninc.com

DBE

Delivered
03/02/2020 @ 11:29 am

Successful
03/02/2020 @ 11:29 am

First Call
Call not included with order

Second Call
2nd call not included with order

On Faves List

CE GREEN INC.

FOLSOM, CA

Tel. (916) 365-4925
Fax (916) 374-7998
carole@cegreeninc.com

DBE

Delivered
03/02/2020 @ 11:29 am

Successful
03/02/2020 @ 11:29 am

First Call
Call not included with order

Second Call
2nd call not included with order

On Faves List

ERNEST B. DEE

SACRAMENTO, CA

Tel. (916) 271-0410
Fax (916) 512-3303
ernestdee6@gmail.com

DBE

Delivered
03/02/2020 @ 11:29 am

Successful
03/02/2020 @ 11:29 am

First Call
Call not included with order

Second Call
2nd call not included with order

Add to my favorites | View Outreach

ERNEST B. DEE

SACRAMENTO, CA

Tel. (916) 271-0410
Fax (916) 512-3303
ernestdee6@gmail.com

DBE

Delivered
03/02/2020 @ 11:29 am

Successful
03/02/2020 @ 11:30 am

First Call
Call not included with order

Second Call
2nd call not included with order

Add to my favorites | View Outreach

HOLLOWAY CONSTRUCTION INC

HANFORD, CA

Tel. (559) 585-0368
Fax (559) 582-3398
brandon@hollowaycoonstructioninc.net

DBE

Bounced
03/02/2020 @ 11:29 am

Successful
03/02/2020 @ 11:29 am

First Call
Call not included with order

Second Call
2nd call not included with order

AGREEMENT

THIS AGREEMENT is made this _____ day of _____, between the CITY OF NEVADA CITY, a municipal corporation, hereinafter called "City," and _____, hereinafter called "Contractor."

WHEREAS, City has caused to be prepared certain plans, specifications and other contract documents pertaining to the COMMERCIAL STREET PHASE 1 WATER, SEWER AND STORM DRAIN in said City: and

WHEREAS, after notice duly given, City has awarded the contract for such work to Contractor;

NOW, THEREFORE, IT IS AGREED by and between said parties as follows:

1. Scope of Work. The contractor agrees to furnish all labor, materials, tools and equipment, required to complete the improvements in Nevada City, California, in accordance with the plans, specifications and other contract representation made in mandatory meetings. All such work shall be performed in a good and workmanlike manner and to the satisfaction of the designer of said project.

2. Contract Price. As consideration for all such work, City agrees to pay to Contractor the total sum of _____ ($_____) Dollars, payable in the manner hereinafter set forth.

3. Contract Documents. The complete contract between the parties hereto consists of the Notice to Contractors, the Information to Bidders, the Bid Proposal, the General Conditions, the Plans and Specifications, and all other drawings and printed or written explanatory matter pertaining thereto. All of the foregoing documents are intended to cooperate, so that any work or requirement specified in any of them is to be carried out or observed the same as if mentioned in all.

4. Time for Performance. Within five (5) days after the execution of this Agreement, City shall give Contractor written Notice to Proceed, and thereafter Contractor shall commence the work and shall prosecute the same with due diligence until completion and acceptance by City; provided, however, that all such work shall be completed and ready for use within **sixty (60) working days** after Contractor receives said Notice to Proceed.

5. Extension of Time. If, because of adverse weather conditions, strikes, inability of the Contractor (through no fault on his/her part) to obtain necessary materials, or other cause beyond the reasonable control of Contractor, Contractor is unable to complete the required work within the allowed time, he shall be entitled to an extension or extensions of such time, commensurate with the unavoidable delay thus caused; provided, however that Contractor shall apply to City for approval of any such extension prior to the expiration of the time for performance as specified in the preceding paragraph.

6. Contractor's Failure to Complete Work. If Contractor fails to prosecute the work with such diligence as will insure its completion within the time hereinabove specified, or any extension thereof, or fails to complete such work within such time, or if Contractor shall otherwise violate this Agreement, City may give written notice to Contractor and his sureties of City's intention to terminate this Agreement unless, within five (5) days after services of such notice, satisfactory arrangements are made with the City for the completion of such work or the curing of such breach; and if such arrangements are not made within such time, City may, at its option, terminate this Agreement by giving written notice of such termination to Contractor and his sureties.

7. Payments to Contractor. On or before the tenth day of each month during the progress of the work, Contractor shall submit to the City Engineer an itemized statement of all labor and materials incorporated into the improvement during the preceding month and the portion of the contract price applicable thereto. City shall pay to Contractor a sum equal to ninety (90%) percent of the contract price apportionment for approved progress payments. The remaining ten (10%) percent shall be paid to Contractor thirty-five (35) days after final acceptance of the work by City.

8. Indemnification. Contractor agrees to hold City, and its officers, agents, and employees harmless from any and all liability and claims for damages for death and personal injury, and for property damage, incident to or arising out of the operations of Contractor or any subcontractor under this Agreement, and Contractor further agrees to defend City, and its officers, agents, and employees in any and all lawsuits which may be brought for such damages caused, or alleged to have been caused, by such operations. In addition, Contractor agrees to furnish to the City evidences of insurance coverage. The approval of such insurance by City shall not constitute a waiver or limitation of any rights under this indemnity agreement, regardless of whether such insurance shall be held to be inapplicable to any such damage or claims therefore.

Executed in duplicate this _____ day of _____, _____.

ATTEST:

_____

CITY OF NEVADA CITY

By: _____
(Mayor)

By: _____
(Contractor)

By: _____
(Authorized Officer)

GENERAL CONDITIONS

1. Inspection of Construction

The Engineer shall have access to the work and the site of the work at all times and the Contractor shall afford such access to the Engineer and shall furnish all relevant information requested by him. At the request of the Engineer the Contractor shall open for inspection any part of the work which has been covered up, and if any part of the work has been covered up in contravention of the instructions of the Engineer, or if on being opened up, is found not to be in accordance with the terms of the contract, the expense of opening and recovering shall be charged to the Contractor. If the work has been covered up but not in contravention of such instructions and is found to be in accordance with the terms of the contract, the actual cost of opening and recovering shall be borne by the City, and in such case, if the work of opening and recovering is done by the Contractor, it shall be considered as extra work and paid for accordingly.

2. Change Orders

If for any reason it becomes necessary or desirable to change the alignment, dimensions, or design of the work, the City shall have the right to issue written change orders therefore. If the Contractor considers that any such change involves extra work, he shall immediately so notify the Engineer in writing, and shall make claim for compensation for such work not later than the first day of the month following the month in which the work was performed. If, in the opinion of the Engineer, any change order results in a change in the amount of work performed, the contract price shall be adjusted for extra work or omitted work, as the case may be.

3. Contractor's Employees and Subcontractors

The Contractor shall at all times be responsible for the adequacy and efficiency of his employees and any subcontractor and the latter's employees. All workers shall have adequate skill and experience to perform properly the work assigned to them.

4. Errors and Omissions

If the Contractor in the course of the work becomes aware of any error or omission in the contract documents, or of any discrepancy between such documents and the physical conditions of the work site, he shall immediately inform the Engineer, who shall take such action as he may deem necessary in order to rectify the matter. Any work done after such discovery and without the authorization of the Engineer will be at the Contractor's risk.

5. Guaranty of Work

For a period of one (1) year after final acceptance of the work by the City, the Contractor shall make all Improvements and replacements arising out of any defective workmanship or materials. If the Contractor fails to make such repairs or replacements within ten (10) days after receiving written notice to do so, or within such further time as may be allowed by the City, the City may undertake such repairs or replacements, in which case the Contractor shall be liable to the City for the cost thereof.

6. Contractor's Responsibility for Work

The Contractor shall be responsible for the proper care and protection of the work, and of all materials delivered to the work site, until completion of the work and its final acceptance by the City.

7. Performance Bond

No Performance bond shall be required for this project.

8. Payment Bond

A payment (labor and materials) bond is required for public works contracts involving an expenditure in excess of twenty-five thousand dollars ($25,000). If the contract is in excess of this amount the contractor shall provide a payment bond to the City of Nevada City before commencement of work. Cost for the bond shall be included in the contractor bid proposal and no additional compensation will be provided.

A payment bond shall be in an amount not less than 100 percent of the total amount payable pursuant to the contract. The bond shall be in the form of a bond and not a deposit in lieu of a bond. The bond shall be executed by an admitted surety insurer.

9. Workmen's Compensation Insurance

The Contractor shall carry workmen's compensation insurance for all employees working on or about the site of the work, and if any work is subcontracted, the Contractor shall require each subcontractor to carry such insurance for all of the latter's employees, unless they are covered by the Contractor's insurance.

10. Insurance Requirements

CONTRACTOR shall purchase and maintain insurance in amounts of coverage not less than the following amounts:

General Liability: (Including operations, products and completed operations)	$1,000,000 per occurrence for bodily injury, personal injury and property damage. If Commercial General Liability Insurance or other form with a general aggregate limit is used either the general aggregate limit shall apply separately to this project/location or the general aggregate limit shall be twice the required occurrence limit.
Automobile Liability:	$1,000,000 per accident for bodily injury and property damage.

The Contractor shall deliver to the City, concurrently with the execution of the contract, certificates evidencing all insurance required by the contract, and each such certificate shall include a provision to the effect that the policy or policies cannot be canceled or materially modified unless the insurer gives the City at least fifteen (15) days written notice thereof prior to such cancellation or modification.

11. Prevailing Wages

Contractor shall pay each laborer, workman or mechanic in accordance with State and Federal Prevailing Wage Rates and the California Labor Code. These wage rates are hereby made a part of this contract:

State General Prevailing Wage Determinations in effect on date advertised
General prevailing wage determination
Journeyman and Apprentice Prevailing Wage Rates can be accessed at the following websites:
https://www.dir.ca.gov/oprl/DPreWageDetermination.html
And http://www.dir.ca.gov/das/publicworks.html

Reference: Labor Code http://www.labor.ca.gov/laborlawreg.htm

Electronic Certified Payroll Records

- All contractors must furnish electronic certified payroll records to the Labor Commissioner using the online eCPR data system
- No contractor or subcontractor may be listed on a bid proposal for a public works project unless registered with the Department of Industrial Relations pursuant to Labor Code section 1725.5 [with limited exceptions from this requirement for bid purposes only under Labor Code section 1771.1(a)].
- No contractor or subcontractor may be awarded a contract for public work on a public works project unless registered with the Department of Industrial Relations pursuant to Labor Code section 1725.5.
- This project is subject to compliance monitoring and enforcement by the Department of Industrial Relations.
- The contractor shall post job site notices prescribed by regulation. (See 8 Calif. Code Reg. §16451(d)

PART B

GENERAL CONDITIONS

Article Number	Title
1	Definitions
2	Preliminary Matters
3	Correlation, Interpretation and Intent of Contract Documents
4	Availability of Lands; Physical Conditions; Reference Points
5	Bonds of Insurance
6	Contractor's Responsibilities
7	Work by Others
8	Owner's Responsibilities
9	Engineer's Status During Construction
10	Changes in the Work
11	Change of the Contract Price
12	Change of the Contract Time
13	Warranty and Guarantee; Tests and Inspections; Correction, Removal or Acceptance of Defective Work
14	Payments and Completion
15	Suspension of Work and Termination
16	Arbitration
17	Miscellaneous

INDEX TO GENERAL CONDITIONS

	Article or Paragraph Number
Access to the Work	13.5
Addenda--definition of (see definition of Specifications)	1
Agreement--definition of	1
Agreement, Execution of	2.1
Application for Payment--definition of	1
Application for Payment, Final	14.12
Application for Progress Payment	14.2
Approval of Final Payment	14.13, 14.14
Approval of Payments--in general	14.4 thru 14.7.5
Arbitration	16
Availability of Lands	4.1
Award--Notice of--defined	1
Before Starting Construction	2.7 thru 2.9
Bid--definition	1
Bidder--definition	1
Bonds, Additional and Insurance	5.12
Bonds and Insurance--in general	5
Bonds--definition of	1
Bonds, Delivery of	2.2
Bonds, Performance and Payment	5.1, 5.2
Cash Allowances	11.9
Change Order--definition of	1
Changes in the Work	10
Claims, Waiver of	14.16
Clarifications and Interpretations	9.3
Cleaning	6.29
Completion, Payments and	14
Completion, Substantial	14.8, 14.9
Contract Documents--definition of	1
Contract Price, Change of	11
Contract Price--definition of	1
Contract Time, Change of	12
Contract Time--Commencement of	2.5
Contract Time--definition of	1
Contractor--definition of	1
Contractor May Stop Work or Terminate	15.5
Contractor, Neglected Work by	13.12
Contractor's Continuing Obligation	14.15
Contractor's Fee	11.6
Contractor's Liability Insurance	5.3
Contractor's Pre-Start Representations	2.4
Contractor's Responsibilities--in general	6
Contractor's Warranty of Title	14.3
Copies of Documents	2.3
Correction or Removal of Defective Work	13.9
Correction Period, One Year	13.10
Correction, Removal or Acceptance of Defective Work--in general	13
Correlation, Interpretation and Intent of Contract Documents	3
Cost of Work	11.4, 11.5

Costs, Supplemental	11.4.5
Day--definition of	1
Defective Work, Acceptance of	13.11
Defective Work, Correction or Removal of	13.9
Defective Work--definition of	9.4
Defective Work--in general	13
Defective Work, Rejecting	9.4
Definitions	1
Delivery of Bonds	2.2
Disagreements, Decisions by Engineer	9.9, 9.10
Documents, Copies of	2.3
Drawings--definition of	1
Drawings, Record	6.19
Emergencies	6.22
Engineer--definition of	1
Engineer's Responsibilities, Limitations on	9.11 thru 9.13
Engineer's Status During Construction--in general	9
Execution of Agreement	2.1
Fee, Contractor's	11.6
Field Order--definition of	1
Field Order--issued by Engineer	10.2
Final Acceptance for Payment	14.12
Final Inspection	14.11
Final Payment, Approval of	14.13, 14.14
General--Miscellaneous Provisions	17.3 thru 17.7
Giving Notice	17.1
Guarantee	13.1
Indemnification	6.30 thru 6.32
Inspection, Final	14.11
Inspection, Tests and	13.2, 13.3
Insurance--Additional Bonds and	5.12
Insurance, Bonds and--in general	5
Insurance--Certificates of	2.9 and 5
Insurance, Contractor's Liability	5.3
Insurance, OWNER's Liability	5.4
Insurance, Property	5.5 thru 5.11
Interpretations and Clarifications	9.3
Labor, Materials and Equipment	6.3 thru 6.6
Laws and Regulations	6.15
Limitations on Engineer's Responsibilities	9.11 thru 9.13
Local Conditions--Contractor's familiarity with	2.4
Materials and Equipment--furnished by Contractor	6.3
Materials or Equipment, Substitute	6.7
Miscellaneous Provisions	17
Modification--definition of	1
Neglected Work by Contractor	13.12
Notice, Giving of	17.1
Notice of Award--definition of	1
Notice to Proceed--definition of	1

Notice to Proceed--giving of 2.5

"Or-Equal" Items 6.7
OWNER--definition of 1
OWNER May Stop Work 13.8
OWNER May Suspend Work, Terminate 15.1 thru 15.4
OWNER's Liability Insurance 5.4
OWNER's Representative--Engineer to serve as 9.1
OWNER's Responsibilities--in general 8

Partial Utilization 14.10
Patent Fees and Royalties 6.13
Payments and Completion--in general 14
Payments, Approval of 14.4 thru 14.7.5
Performance, Payment and other Bonds 5.1 thru 5.2
Permits 6.14, 6.15
Physical Conditions--Surveys and Reports 4.2
Physical Conditions, Unforeseen 4.3
Preconstruction Conference 2.9
Premises, Use of 6.17, 6.18
Price--Change of Contract 11
Price--Contract--definition of 1
Progress Payment, Applications for 14.2
Progress Schedule 2.8, 14.1
Project--definition of 1
Project Representative, Resident--definition of 1
Project Representative, Resident--provision of 9.8
Project, Starting 2.6
Property Insurance 5.5 thru 5.11
Protection, Safety and 6.20 thru 6.21

Record Drawings 6.19
Reference Points 4.4
Regulations, Laws and 6.15
Rejecting Defective Work 9.4
Removal or Correction of Defective Work 13.9
Resident Project Representative--definition of 1
Resident Project Representative--provision of 9.8
Responsibilities, Contractor's 6
Responsibilities, OWNER's 8
Royalties, Patent Fees and 6.13

Safety and Protection 6.20 thru 6.21
Samples 6.23
Schedule of Shop Drawings Submissions 2.8, 14.1
Schedule of Values 14.1
Shop Drawings and Samples 6.23 thru 6.28
Shop Drawings--definition of 1
Site inspection--by Contractor 2.8
Site, Visits to--by Engineer 9.2
Specifications--definition of 1
Starting Construction, Before 2.7 thru 2.9
Stopping Work--by Contractor 15.5
Stopping Work--by OWNER 13.8
Subcontractor--definition of 1
Subcontractors--in general 6.8 thru 6.12
Substantial Completion--certification of 14.8

Substantial Completion--definition of	1
Substitute Materials or Equipment	6.7
Subsurface Conditions	4.2, 4.3
Supplemental Costs	11.4.5
Surety--consent to payment	14.12, 14.14
Surety--qualification of	5.1, 5.2
Suspending Work, by OWNER	15.1
Suspension of Work and Termination--in general	15
Superintendent--Contractor's	6.2
Supervision and Superintendence	6.1, 6.2
Taxes	6.16
Termination--by Contractor	15.5
Termination--by OWNER	15.2 thru 15.4
Termination, Suspension of Work and--in general	15
Tests and Inspections	13.2, 13.3, 13.7
Time, Change of Contract	12
Time, Computation of	17.2
Time, Contract--definition of	1
Uncovering Work	13.6, 13.7
Use of Premises	6.17, 6.18
Values, Schedule of	14.1
Visits to Site--by Engineer	9.2
Waiver of Claims	14.16
Warranty and Guarantee--by Contractor	13.1
Warranty of Title, Contractor's	14.3
Work, Access to	13.5
Work by Others--in general	7
Work, Cost of	11.4
Work--definition of	1
Work, Neglected by Contractor	13.12
Work, Stopping by Contractor	15.5
Work, Stopping by OWNER	15.1 thru 15.4

GENERAL CONDITIONS

ARTICLE 1 - DEFINITIONS

Whenever used in these General Conditions or in the other Contract Documents, the following terms have the meanings indicated which are applicable to both the singular and plural thereof:

Agreement - The written agreement between OWNER and CONTRACTOR covering the Work to be performed; other Contract Documents are attached to the Agreement.

Application for Payment - The form furnished by ENGINEER which is to be used by CONTRACTOR in requesting progress payments and which is to include the schedule of values required by paragraph 14.1 and an affidavit of CONTRACTOR that progress payments therefore received on account of the Work have been applied by CONTRACTOR to discharge in full all of CONTRACTOR's obligations reflected in prior Applications for Payment.

Bid - The offer or proposal of the Bidder submitting on the prescribed form setting forth the prices for the Work to be performed.

Bidder - Any person, firm, or corporation submitting a Bid for the Work.

Bonds - Bid, performance, and payment bonds and other instruments of security, furnished by CONTRACTOR and his surety in accordance with the Contract Documents.

Change Order - A written order to CONTRACTOR signed by OWNER authorizing an addition, deletion, or revision in the Work, or an adjustment in the Contract Price or the Contract Time issued after execution of the Agreement.

Contract Documents - The Agreement, Addenda (whether issued prior to the opening of Bid or the execution of the Agreement), Instructions to Bidders. CONTRACTOR's Bid, the Bonds, the Notice of Award, these General Conditions, the Supplementary Conditions, the Specifications, Drawings and Modifications.

Contract Price - The total moneys payable to CONTRACTOR under the Contract Documents.

Contract Time - The number of days stated in the Agreement for the completion of the Work, computed as provided in paragraph 17.2.

CONTRACTOR - The person, firm, or corporation with whom OWNER has executed the Agreement.

Day - A calendar day of twenty-four hours measured from midnight to the next midnight.

Drawings - The drawings which show the character and scope of the Work to be performed and which have been prepared or approved by ENGINEER and are referred to in the Contract Documents.

ENGINEER - The person, firm or corporation named as such in the Agreement.

Field Order - A written order issued by ENGINEER which clarifies or interprets the Contract Documents in accordance with paragraph 9.3 or orders minor changes in the Work in accordance with paragraph 10.2.

Modification - (a) A written amendment of the Contract Documents signed by both parties, (b) a Change Order, (c)

a written clarification or interpretation issued by ENGINEER in accordance with paragraph 9.3, or (d) a written order for a minor change or alteration in the Work issued by ENGINEER pursuant to paragraph 10.2. A Modification may only be issued after execution of the Agreement.

Notice of Award - The written notice by OWNER to the apparent successful Bidder stating that upon compliance with the conditions precedent to be fulfilled by him within the time specified, OWNER will execute and deliver the Agreement to him.

Notice to Proceed - A written notice given by OWNER to CONTRACTOR (with a copy to ENGINEER) fixing the date on which the Contract Time will commence to run and on which CONTRACTOR shall start to perform his obligations under the Contract Document.

OWNER - A public body or authority, corporation, association, partnership, or individual for whom the Work is to be performed.

Project - The entire construction to be performed as provided in the Contract Documents.

Resident Project Representative - The authorized representative of ENGINEER who is assigned to the Project site or any part thereof.

Shop Drawings - All drawings, diagrams, illustrations, brochures, schedules, and other data which are prepared by CONTRACTOR, a Subcontractor, manufacturer, supplier, or distributor and which illustrate the equipment, material, or some portion of the Work.

Specifications - Those portions of the Contract Documents consisting of written technical descriptions of materials, equipment, construction systems, standards, and workmanship as applied to the Work. The specifications are customarily organized in 16 divisions in accordance with the Uniform System for Construction Specifications endorsed by the Construction Specifications Institute. [*Note: the term "Technical Provisions" formerly described what is now referred to as the Specifications. For uniformity with the usage of other professional societies the term "Project Manual" is used to describe the volume formerly referred to as "The Specifications." The Project Manual contains documents concerning bidding requirements which in general govern relationships prior to the execution of the Agreement (such as the Invitation to Bid, Instructions to Bidders and Notice of Award) and the other portions of the Contract Documents.*]

Subcontractor - An individual, firm, or corporation having a direct contract with CONTRACTOR or with any other Subcontractor for the performance of a part of the Work at the site.

Substantial Completion - The date as certified by ENGINEER when the construction of the Project or a specified part thereof is sufficiently completed, in accordance with the Contract Documents, so that the Project or specified part can be utilized for the purpose for which it was intended: or if there be no such certification, the date when final payment is due in accordance with paragraph 14.13.

Work - Any and all obligations, duties and responsibilities necessary to the successful completion of the Project assigned to or undertaken by CONTRACTOR under the Contract Documents, including all labor, materials, equipment and other incidentals, and the furnishing thereof.

ARTICLE 2 - PRELIMINARY MATTERS

Execution of Agreement:

2.1 At least three counterparts of the Agreement and such other Contract Documents as practicable will be executed and delivered by CONTRACTOR to OWNER within fifteen days of the Notice of Award: and OWNER will execute and deliver one counterpart to CONTRACTOR within ten days of receipt of the executed Agreement from CONTRACTOR. ENGINEER will identify those portions of the Contract Documents not so signed and such identification will be binding on all parties. OWNER, CONTRACTOR, and ENGINEER shall each receive an executed counterpart of the Contract Documents and additional conformed copies as required.

Delivery of Bonds:

2.2 When he delivers the executed Agreement to OWNER, CONTRACTOR shall also deliver to OWNER such Bonds as he may be required to furnish in accordance with paragraph 5.1.

Copies of Documents:

2.3 OWNER shall furnish to CONTRACTOR up to ten copies (unless otherwise provided in the Supplementary Conditions) of the Contract Documents as are reasonably necessary for the execution of the Work. Additional copies will be furnished, upon request, at the cost of reproduction.

Contractor's Pre-Start Representations:

2.4 CONTRACTOR represents that he has familiarized himself with, and assumes full responsibility for having familiarized himself with, the nature and extent of the Contract Documents, Work, locality, and with all local conditions and federal, state, and local laws, ordinances, rules, and regulations that may in any manner affect performance of the Work, and represents that he has correlated his study and observations with the requirements of the Contract Documents. CONTRACTOR also represents that he has studied all surveys and investigation reports of subsurface and latent physical conditions referred to in the General Requirements (Division 1) of the Specifications and made such additional surveys and investigations as he deems necessary for the performance of the Work at the Contract Price in accordance with the requirements of the Contract Documents and that he has correlated the results of all such data with the requirements of the Contract Documents.

Commencement of Contract Time: Notice to Proceed:

2.5 The Contact Time will commence to run on the thirtieth day after the day on which the executed Agreement is delivered by OWNER to CONTRACTOR: or if Notice to Proceed is given, on the day indicated in the Notice to Proceed; but in no event shall the Contract Time commence to run later than the ninetieth day after the day of Bid opening or the thirtieth day after the day on which OWNER delivers the executed Agreement to CONTRACTOR. A Notice to Proceed may be given at any time within thirty days after the day on which OWNER delivers the executed Agreement to CONTRACTOR.

Starting the Project:

2.6 CONTRACTOR shall start to perform his obligations under the Contract Documents on the date when the Contract Time commences to run. No Work shall be done at the site prior to the date on which the Contract Time commences to run.

Before Starting Construction:

2.7 Before undertaking each part of the Work, CONTRACTOR shall carefully study and compare the Contract Documents and check and verify pertinent figures shown thereon and all applicable field measurements. He shall at once report in writing to ENGINEER any conflict, error, or discrepancy which he may discover, however, he shall not be liable to OWNER or ENGINEER for his failure to discover any conflict, error, or discrepancy in the Drawings or Specifications.

2.8 Within ten days after delivery of the executed Agreement by OWNER to CONTRACTOR, CONTRACTOR shall submit to ENGINEER for approval, an estimated progress schedule indicating the starting and completion dates of the various stages of the Work, and a preliminary schedule of Shop Drawing submissions.

2.9 Before starting the Work at the site, CONTRACTOR shall furnish OWNER and ENGINEER certificates of insurance as required by Article 5. Within twenty days after delivery of the executed Agreement by OWNER to CONTRACTOR, but before starting the Work at the site, a conference will be held to review the above schedules to establish procedures for handling Shop Drawings and other submissions and for processing Applications for Payment, and to establish a working understanding between the parties as to the Project. Present at the conference will be OWNER or his representative, ENGINEER, Resident Project Representatives, CONTRACTOR, and his Superintendent.

ARTICLE 3 - CORRELATION, INTERPRETATION, AND INTENT OF CONTRACT DOCUMENTS

3.1 It is the intent of the Specifications and Drawings to describe a complete Project to be constructed in accordance with the Contract Documents. The Contract Documents comprise the entire Agreement between OWNER and CONTRACTOR. They may be altered only by a Modification.

3.2 The Contract Documents are complementary; what is called for by one is as binding as if called for by all. The CONTRACTOR finds a conflict, error, or discrepancy in the Contract Documents, he shall call it to ENGINEER's attention in writing at once and before proceeding with the Work affected thereby; however, he shall not be liable to OWNER or ENGINEER for his failure to discover any conflict, error, or discrepancy in the Specifications or Drawings. In resolving such conflicts, errors, or discrepancies, the documents shall be given precedence in the following order: Agreement, Modifications, Addenda, Supplementary Conditions, Specifications and Drawings. Figure dimensions on Drawings shall govern over scale dimensions, and detailed Drawings shall govern over general Drawings. Any Work that may reasonably be inferred from the Specifications or Drawings as being required to produce the intended result shall be supplied whether or not it is specifically called for. Work, materials, or equipment described in words which so applied have a well-known technical or trade meaning shall be deemed to refer to such recognized standards.

ARTICLE 4 - AVAILABILITY OF LANDS; PHYSICAL CONDITIONS; REFERENCE POINTS

Availability of Lands:

4.1 OWNER shall furnish, as indicated in the Contract Documents and not later than the date when needed

by CONTRACTOR, the lands upon which the Work is to be done, rights-of-way thereto, and such other lands which are designated for the use of CONTRACTOR. Easements for permanent structures or permanent changes in existing facilities will be obtained and paid for by OWNER, unless otherwise specified in the Contract Documents. If CONTRACTOR believes that any delay in OWNER's furnishing these lands or easements entitles him to an extension of the Contract Time, he may make a claim therefore as provided in Article 12. CONTRACTOR shall provide for all additional lands and access thereto that may be required for temporary construction facilities or storage of materials and equipment.

Physical Conditions - Surveys and Reports:

4.2 Reference is made to the General Requirements (Division 1) of the Specifications for identification of those surveys and investigation reports of subsurface and latent physical conditions at the Project site or otherwise affecting performance of the Work which have been relied upon by ENGINEER in preparation of the Drawings and Specifications.

Unforeseen Physical Conditions:

4.3 CONTRACTOR shall promptly notify OWNER and ENGINEER in writing of any subsurface or latent physical conditions at the site differing materially from those indicated in the Contract Documents. ENGINEER will promptly investigate those conditions and advise OWNER in writing if further surveys or subsurface tests are necessary. Promptly thereafter, OWNER shall obtain the necessary additional surveys and tests and furnish copies to ENGINEER and CONTRACTOR. If ENGINEER finds that the results of such surveys or tests indicate that there are subsurface or latent physical conditions which differ materially from those intended in the Contract Documents, and which could not reasonably have been anticipated by CONTRACTOR, a Change Order shall be issued incorporating the necessary revisions.

Reference Points:

4.4 OWNER shall provide engineering surveys for construction to establish reference points which in his judgment are necessary to enable CONTRACTOR to proceed with the Work. CONTRACTOR shall be responsible for surveying and laying out the Work (unless otherwise provided in the Supplementary Conditions), and shall protect and preserve the established reference points and shall make no changes or relocations without the prior written approval of OWNER. He shall report to ENGINEER whenever any reference point is lost or destroyed or requires relocation because of necessary changes in grades or locations. CONTRACTOR shall replace and accurately relocate all reference points so lost, destroyed, or moved.

ARTICLE 5 - BONDS AND INSURANCE

Performance and Payment Bonds:

5.1 Upon execution of the contract agreement, CONTRACTOR shall provide, at his own expense, a Performance bond in an amount equal to at least 100 percent of the contract price, as security for the faithful performance of the contract within the time prescribed, in a manner satisfactory to the City, and that all materials and workmanship will be free from original or developed defects. This performance bond must remain in full force and

effect until the end of all warranty periods set forth in the contract documents.

CONTRACTOR shall also provide, at his own expense, a separate Payment bond, in an amount equal to at least 100 percent of the contract price, as security for payment of all persons performing labor and furnishing materials regarding the contract. This payment bond must remain in full force and effect until the work is accepted by the City and until all claims for materials and labor are paid and shall otherwise comply with civil code. Sureties for these bonds shall be satisfactory to the City Attorney.

Should any bond become insufficient, CONTRACTOR shall renew the bond within 10 working days after receipt of notice from the City.

Should any surety at any time be unsatisfactory to the City, a notice will be given to CONTRACTOR to that effect. No further payments shall be deemed due or will be made under said agreement until a new surety shall qualify and be accepted by the City.

Changes in said agreement or extensions of time, made pursuant to the agreement, shall in no way release CONTRACTOR or surety from its obligations. Notice of such changes or extensions shall be waived by the surety.

Contractor's Liability Insurance:

5.2 CONTRACTOR shall purchase and maintain such insurance as will protect him from claims under workman's compensation laws, disability benefit laws, or other similar employee benefit laws; from claims for damages because of bodily injury, occupational sickness or disease, or death of his employees, and claims insured by usual personal injury liability coverage; and from claims for injury to or destruction of tangible property, including loss of use resulting therefrom – any or all of which may arise out of or result from CONTRACTOR's operations under the Contract Documents, whether such operations be by himself or by any Subcontractor or anyone directly or indirectly employed by any of them or for whose acts any of them may be legally liable. This insurance shall include the specific coverages and be written for not less than any limits of liability and maximum deductibles specified in the Supplementary Conditions or General Requirements (Division 1) or required by law, whichever is greater, shall include parties. Before starting Work, CONTRACTOR shall file with OWNER and ENGINEER certificates of such insurance, acceptable to OWNER; these certificates shall contain a provision that the coverage afforded under the policies will not be cancelled or materially changed until at least fifteen days prior written notice has been given to OWNER and ENGINEER.

Any deductibles or self-insured retentions must be declared to and approved by the OWNER. At the option of the OWNER, either: the insurer shall reduce or eliminate such deductibles or self-insured retentions as respects the OWNER, its officers, officials, employees and volunteers; or the CONTRACTOR shall provide a financial guarantee satisfactory to the OWNER guaranteeing payment of losses and related investigations, claim administration and defense expenses.

The general liability and automobile liability policies are to contain, or be endorsed to contain, the following provisions:

1. The ENGINEER and the OWNER, its officers, officials, employees, and volunteers are to be covered as insureds with respect to liability arising out of automobiles owned, leased, hired or borrowed by or on behalf of the CONTRACTOR; and with respect to liability arising out of work or operations performed by or on behalf of the

CONTRACTOR including materials, parts or equipment furnished in connection with such work or operations. General liability coverage can be provided in the form of an endorsement to the CONTRACTOR's insurance.

2. For any claims related to this project, the CONTRACTOR's insurance coverage shall be primary insurance as respects the ENGINEER and the OWNER, its officers, officials, employees, and volunteers. Any insurance or self-insurance maintained by the ENGINEER and the OWNER, its officers, officials, employees, or volunteers shall be excess of the CONTRACTOR's insurance and shall not contribute with it.

3. Each insurance policy required by this clause shall be endorsed to state that coverage shall be cancelled by either party, except after fifteen (15) days prior written notice by certified mail, return receipt requested, has been given to the OWNER and the ENGINEER.

4. Coverage shall not extend to any indemnity coverage for the active negligence of the additional insured in any case where an agreement to indemnify the additional insured would be invalid under *Subdivision (b) of Section 2782 of the Civil Code*.

Insurance is to be placed with a current A.M. Best's rating of no less than A:VII.

CONTRACTOR shall furnish the OWNER with original certificates and amendatory endorsements effecting coverage required by this clause. The endorsements should be on forms provided by the OWNER or on other than the OWNER's forms, provided those endorsements or policies conform to the requirements. All certificates and endorsements are to be received and approved by the OWNER before work commences. The OWNER reserved the right to require complete, certified copies of all required insurance policies, including endorsements effecting the coverage required by these specifications at any time.

CONTRACTOR shall include all Subcontractors as insureds under its policies or shall furnish separate certificates and endorsements for each Subcontractor. All coverages for Subcontractors shall be subject to all of the requirements stated herein.

OWNER's Liability Insurance:

5.4 OWNER shall be responsible for purchasing and maintaining his own liability insurance and, at his option, may purchase and maintain such insurance as will protect him against claims which may arise from operations under the Contract Documents.

Property Insurance:

5.5 Unless otherwise provided, OWNER shall purchase and maintain property insurance upon the Project to the full insurable value hereof. This insurance shall include the interests of OWNER, CONTRACTOR, and Subcontractors in the Work, shall insure against the perils of Fire, Extended Coverage, Vandalism, and Malicious Mischief, and such other perils as may be specified in the Supplementary Conditions or General Requirements (Division 1), and shall include damages, losses, and expenses arising out of or resulting from any insured loss or incurred in the repair or replacement of any insured property (including fees and charges of engineers, architects, attorneys, and other professionals).

5.6 OWNER shall purchase and maintain such steam boiler and machinery insurance as may be required by the Supplementary Conditions or by law. This insurance shall include the interests of OWNER, CONTRACTOR, and Subcontractors in the Work.

5.7 Any insured loss under the policies of insurance required by paragraphs 5.5 and 5.6 is to be adjusted with OWNER and made payable to OWNER as trustee for the insureds, as their interests may appear, subject to the requirements of any applicable mortgage clause and of paragraph 5.11.

5.8 OWNER shall file a copy of all policies with CONTRACTOR before an exposure to loss may occur. If OWNER does not intend to purchase such insurance, he shall inform CONTRACTOR in writing prior to commencement of the Work. CONTRACTOR may then effect insurance which will protect the interests of himself and his Subcontractors in the Work, and by appropriate Change Order the cost thereof shall be charged to OWNER. If CONTRACTOR is damaged by failure of OWNER to purchase or maintain such insurance and so to notify CONTRACTOR, then OWNER shall bear reasonable costs properly attributable thereto.

5.9 If CONTRACTOR requests in writing that other special insurance be included in the property insurance policy, OWNER shall, if possible, include such insurance and the cost thereof shall be charged to CONTRACTOR by appropriate Change Order.

5.10 OWNER and CONTRACTOR waive all rights against each other for damages caused by fire or other perils to the extent covered by insurance provided under paragraphs 5.5 through 5.11, inclusive, except such rights as they may have to the proceeds of such insurance held by OWNER as trustee. CONTRACTOR shall require similar waivers by Subcontractors in accordance with paragraph 6.12.

5.11 OWNER as trustee shall have power to adjust and settle any loss with the insurers unless one of the parties in interest shall object in writing within five days after the occurrence of loss to OWNER's exercise of this power, and if such objection be made, arbitrators shall be chosen as provided in Article 16. OWNER as trustee shall, in that case, make settlement with the insurers in accordance with the directions of such arbitrators. If distribution of the insurance proceeds by arbitration is required, the arbitrators will direct such distribution.

Additional Bonds and Insurance:

5.12 Prior to delivery of the executed Agreement by OWNER to CONTRACTOR, OWNER may require CONTRACTOR to furnish such other Bonds and such additional insurance, in such form and with such sureties or insurers as OWNER may require. If such other Bonds or such other insurance are specified by written instructions given prior to opening of Bids, the premiums shall be paid by CONTRACTOR; if subsequent thereto, they shall be paid by OWNER (except as otherwise provided in paragraph 6.7).

ARTICLE 6 - CONTRACTOR'S RESPONSIBILITIES

Supervision and Superintendence:

6.1 CONTRACTOR shall supervise and direct the Work efficiently and with his best skill and attention. He shall be solely responsible for the means, methods, techniques, sequences, and procedures of construction, but he shall not be solely responsible for the negligence of others in the design or selection of a specific means, method, technique, sequence, or procedure of construction which is indicated in and required by the Contract Documents. CONTRACTOR shall be responsible to see that the finished Work complies accurately with the Contract Documents.

6.2 CONTRACTOR shall keep on the Work at all times during its progress a competent resident superintendent, who shall not be replaced without written notice to OWNER and ENGINEER except under extraordinary circumstances. The superintendent will be CONTRACTOR's representative at the site and shall have authority to act on behalf of CONTRACTOR. All communications given to the superintendent shall be as binding as if given to CONTRACTOR.

Labor, Materials, and Equipment:

6.3 CONTRACTOR shall provide competent, suitably qualified personnel to survey and lay out the Work and perform personnel to survey and lay out the Work and perform construction as required by the Contact Documents. He shall at all times maintain good discipline and order at the site.

6.4 CONTRACTOR shall furnish all materials, equipment, labor, transportation, construction equipment, and machinery, tools, appliances, fuel, power, light, heat, telephone, water, and sanitary facilities and all other facilities and incidentals necessary for the execution, testing, initial operation, and completion of the Work.

6.5 All materials and equipment shall be new, except as otherwise provided in the Contract Documents. If required by ENGINEER, CONTRACTOR shall furnish satisfactory evidence as to the kind and quality of materials and equipment.

6.6 All materials and equipment shall be applied, installed, connected, erected, used, cleaned, and conditioned in accordance with the instructions of the applicable manufacturer, fabricator, or processors, except as otherwise provided in the Contract Documents.

Substitute Materials or Equipment:

7.1 If the General Requirements (Division 1 of the Specifications), law, ordinance, or applicable rules or regulations permit CONTRACTOR to furnish or use a substitute that is equal to any material or equipment specified, and if CONTRACTOR wishes to furnish or use a proposed substitute, he shall, prior to the conference called for by paragraph 2.9 (unless another time is provided in the General Requirements), make written application to ENGINEER for approval of such substitute certifying in writing that the proposed substitute will perform adequately the functions called for by the general design, be similar and of equal substance to that specified and be suited to the same use and capable of performing the same function as that specified; stating whether or not its incorporation in or use in connection with the Project is subject to the payment of any license fee or royalty; and identifying all variations of the proposed substitute from that specified and indicating available maintenance service. No substitute shall be ordered or installed without the written approval of ENGINEER who will be the judge of equality and may require CONTRACTOR to furnish such other data about the proposed substitute as he considers pertinent. No substitute shall be ordered or installed without such performance guarantee and bonds as OWNER may require which shall be furnished at CONTRACTOR's expense.

Concerning Subcontractors:

6.8 CONTRACTOR shall not employ any Subcontractor or other person or organization (including those who are to furnish the principal items of materials or equipment), whether initially or as a substitute, against whom OWNER or ENGINEER may have reasonable objection. A Subcontractor or other person or organization identified in writing to OWNER and ENGINEER by CONTRACTOR prior to the Notice of Award and not objected to in

writing by OWNER or ENGINEER prior to the Notice of Award will be deemed acceptable to OWNER and ENGINEER. Acceptance of any Subcontractor, other person or organization by OWNER or ENGINEER shall not constitute a waiver of any right of OWNER or ENGINEER to reject defective Work or Work not in conformance with the Contract Documents. If OWNER or ENGINEER after due investigation has reasonable objection to any Subcontractor, other person or organization proposed by CONTRACTOR after the Notice of Award. CONTRACTOR shall submit an acceptable substitute and the Contract Price shall be increased or decreased by the difference in cost occasioned by such substitution, and an appropriate Change Order shall be issued. CONTRACTOR shall not be required to employ any Subcontractor, other person or organization against whom he has reasonable objection. CONTRACTOR shall not without the consent of OWNER and ENGINEER make any substitution for any Contractor, other person or organization who has been accepted by OWNER and ENGINEER unless ENGINEER determines that there is good cause for doing so.

6.9 CONTRACTOR shall be fully responsible for all acts and omissions of his Subcontractors and of persons and organizations directly or indirectly employed by them and of persons and organizations for whose acts any of them may be liable to the same extent that he is responsible for the acts and omissions of persons directly employed by him. Nothing in the Contract Documents shall create any contractual relationship between OWNER or ENGINEER and any Subcontractor or other person or organization having a direct contract with CONTRACTOR, nor shall it create any obligation on the part of OWNER or ENGINEER or pay or to see to the payment of any moneys due any Subcontractor or other person or organization, except as may otherwise be required by law. OWNER or ENGINEER may furnish to any Subcontractor or other person or organization, to the extent practicable, evidence of amounts paid to CONTRACTOR on account of specific Work done in accordance with the schedule of values.

6.10 The divisions and sections of the Specifications and the identifications of any Drawings shall not control CONTRACTOR in dividing the Work among Subcontractors or delineating the Work to be performed by any specific trade.

6.11 CONTRACTOR agrees to bind specifically every Subcontractor to the applicable terms and conditions of the Contract Documents for the benefit of OWNER.

6.12 All Work performed for CONTRACTOR by a Subcontractor shall be pursuant to an appropriate agreement between CONTRACTOR and the Subcontractor which shall contain provisions that waive all rights the contracting parties may have against one another for damages caused by fire or other perils covered by insurance provided in accordance with paragraphs 5.5 through 5.11, inclusive, except such rights as they may have to the proceeds of such insurance held by OWNER as trustee under paragraph 5.9. CONTRACTOR shall pay each Subcontractor a just share of any insurance moneys received by CONTRACTOR under paragraph 5.5 through 5.11, inclusive.

Patent Fees and Royalties:

6.13 CONTRACTOR shall pay all license fees and royalties and assume all costs incident to the use in the performance of the Work of an invention, design, process, product, or device which is the subject of patent rights or copyrights held by others. If a particular invention, design, process, product, or device is specified in the Contract Documents for use in the performance of the Work and if to the actual knowledge of OWNER or ENGINEER its use is subject to patent rights or copyrights calling for the payment of any license fee or royalty to others, the existence of such rights shall be disclosed by OWNER in the Contract Documents. CONTRACTOR shall indemnify and hold harmless OWNER and ENGINEER and anyone directly or indirectly employed by either of them from and against all claims, damages, losses, and expenses (including attorneys' fees) arising out of any infringement of patent rights

or copyrights incident to the use in the performance of the Work or resulting from the incorporation in the Work of any invention, design, process, product, or device not specified in the Contract Documents, and shall defend all such claims in connection with any alleged infringement of such rights.

Permits:

6.14 CONTRACTOR shall obtain and pay for all construction permits and licenses and shall pay all governmental charges and inspection fees necessary for the prosecution of the Work, which are applicable at the time of his Bid. OWNER shall assist CONTRACTOR, when necessary, in obtaining such permits and licenses. CONTRACTOR shall also pay all public utility charges.

Laws and Regulations:

6.15 CONTRACTOR shall give all notices and comply with all laws, ordinances, rules, and regulations applicable to the Work. If CONTRACTOR observes that the Specifications and Drawings are at variance therewith, he shall give ENGINEER prompt written notice thereof, and any necessary changes shall be adjusted by an appropriate Modification. If CONTRACTOR performs any Work knowing it to be contrary to such laws, ordinances, rules, and regulations, and without such notice to ENGINEER, he shall bear all costs arising therefrom; however, it shall not be his primary responsibility to make certain that the Specifications and Drawings are in accordance with such laws, ordinances, rules, and regulations.

Taxes:

6.16 CONTRACTOR shall pay all sales, consumer, use, and other similar taxes required to be paid by him in accordance with the law of the place where the Work is to be performed.

Use of Premises:

6.17 CONTRACTOR shall confine his equipment, the storage of materials and equipment, and the operations of his workmen to areas permitted by law, ordinances, permits, or the requirements of the Contract Documents, and shall not unreasonably encumber the premises with materials or equipment.

6.18 CONTRACTOR shall not load nor permit any part of any structure to be loaded with weights that will endanger the structure, nor shall he subject any part of the Work to stresses or pressures that will endanger it.

Record Drawings:

6.19 CONTRACTOR shall keep one record copy of all Specifications, Drawings, Addenda, Modifications, and Shop Drawings at the site in good order and annotated to show changes made during the construction process. These shall be available to ENGINEER and shall be delivered to him for OWNER upon completion of the Project. [*Note: Further provisions in respect of such record drawings may be included in the General Requirements (Division 1).*]

Safety and Protection:

6.20 CONTRACTOR shall be responsible for initiating, maintaining, and supervising all safety precautions and programs in connection with the Work. He shall take all necessary precautions for the safety of, and shall provide

the necessary protection to prevent damage, injury, or loss to:

6.20.1 all employees on the Work and other persons who may be affected thereby,

6.20.2 all the Work and all materials or equipment to be incorporated therein, whether in storage on or off the site and

6.20.3 other property at the site or adjacent thereto, including trees, shrubs, lawns, walks, pavements, roadways, structures, and utilities not designated for removal, relocation, or replacement in the course of construction.

CONTRACTOR shall comply with all applicable laws, ordinances, rules, regulations, and orders of any public body having jurisdiction for the safety of persons or property or to protect them from damage, injury, or loss. He shall erect and maintain, as required by the conditions and progress of the Work, all necessary safeguards for its safety and protection. He shall notify OWNERs of adjacent utilities when prosecution of the Work may affect them. All damage, injury, or loss to any property referred to in paragraph 6.20.2 or 6.20.3 caused, directly or indirectly, in whole or in part, by CONTRACTOR, any Subcontractor or anyone directly or indirectly employed by any of them or anyone for whose acts any of them may be liable, shall be remedied by CONTRACTOR: except damage or loss attributable to the fault of Drawings or Specifications or to the acts or omissions of OWNER or ENGINEER or anyone employed by either of them or anyone for whose acts either of them may be liable, and not attributable, directly or indirectly, in whole or in part, to the fault or negligence of CONTRACTOR. CONTRACTOR's duties and responsibilities for the safety and protection of the Work shall continue until such time as all the Work is completed and ENGINEER has issued a notice to OWNER and CONTRACTOR in accordance with paragraph 14.13 that Work is acceptable

6.21 CONTRACTOR shall designate a responsible member of his organization at the site whose duty shall be the prevention of accidents. This person shall be CONTRACTOR's superintendent unless otherwise designated in writing by CONTRACTOR to OWNER.

Emergencies:

6.22 In emergencies affecting the safety of persons or the Work or property at the site or adjacent thereto, CONTRACTOR, without special instruction or authorization from ENGINEER or OWNER, is obligated to act, at his discretion, to prevent threatened damage, injury, or loss. He shall give ENGINEER prompt written notice of any significant changes in the Work or deviations from the Contract Documents caused thereby, and a Change Order shall thereupon be issued covering the changes and deviations involved. If CONTRACTOR believes that additional work done by him in any emergency which arose from causes beyond his control entitles him to an increase in the Contract Price or an extension of the Contract Time, he may make a claim therefore as provided in Articles 11 and 12.

Shop Drawings and Samples:

6.23 After checking and verifying all field measurements. CONTRACTOR shall submit to ENGINEER for approval, in accordance with the accepted schedule of Shop Drawing submissions (see paragraph 2.8) five copies (or at ENGINEER's option, one reproducible copy) of all Shop Drawings, which shall have been checked by and stamped with the approval of CONTRACTOR and identified as ENGINEER may require. The data shown on the Shop Drawings will be complete with respect to dimensions, design criteria, materials of construction, and the like to enable ENGINEER to review the information as required.

6.24 CONTRACTOR shall also submit to ENGINEER for approval with such promptness as to cause no delay in Work, all samples required by the Contract Documents. All samples will have been checked by and stamped with the approval of CONTRACTOR, identified clearly as to material, manufacturer, any pertinent catalog numbers and the use for which intended.

6.25 At the time of submission, CONTRACTOR shall in writing call ENGINEER's attention to any deviations that the Shop Drawing or sample may have from the requirements of the Contract Documents.

6.26 ENGINEER will review and approve with reasonable promptness Shop Drawings and samples, but his review and approval shall be only for conformance with the design concept of the Project and for compliance with the information given in the Contract Documents. The approval of a separate item as such will not indicate approval of the assembly in which the item functions. CONTRACTOR shall make any corrections required by ENGINEER and shall return the required number of corrected copies of Shop Drawings and resubmit new samples until approved. CONTRACTOR shall direct specific attention in writing or on resubmitted Shop Drawings to revisions other than the corrections called for by ENGINEER on previous submissions. CONTRACTOR's stamp of approval on any Shop Drawing or sample shall constitute a representation to OWNER and ENGINEER that CONTRACTOR has either determined and verified all quantities, dimensions, field construction criteria, materials, catalog numbers, and similar data or he assumes full responsibility for doing so, and that he has reviewed or coordinated each Shop Drawing or sample with the requirements of the Work and the Contract Documents.

6.27 Where a Shop Drawing or sample submission is required by the Specifications, no related Work shall be commenced until the submission has been approved by ENGINEER. A copy of each approved Shop Drawing and each approved sample shall be kept in good order by CONTRACTOR at the site and shall be available to ENGINEER.

6.28 ENGINEER's approval of Shop Drawings or samples shall not relieve CONTRACTOR from his responsibility for any deviations from the requirements of the Contract Documents unless CONTRACTOR has in writing called ENGINEER's attention to such deviation at the time of submission and ENGINEER has given written approval to the specific deviation, nor shall any approval by ENGINEER relieve CONTRACTOR from responsibility for errors or omissions in the Shop Drawings.

[*Note: Further provisions in respect to Shop Drawings and samples may be included in the General Requirements (Division 1).]*

Cleaning:

6.29 CONTRACTOR shall keep the premises free from accumulations of waste materials, rubbish, and other debris resulting from the Work, and at the completion of the Work he shall remove all waste materials, rubbish, and debris from and about the premises as well as all tools, construction equipment and machinery, and surplus materials, and shall leave the site clean and ready for occupancy by OWNER. CONTRACTOR shall restore to their original condition those portions of the site not designated for alteration by the Contract Documents. [*Note: Further provisions in respect to cleaning may be included in the General Requirements (Division 1).]*

Indemnification:

6.30 CONTRACTOR shall indemnify and hold harmless OWNER and ENGINEER and their agents and

employees from and against all claims, damages, losses, and expenses including attorneys' fees arising out of or resulting from the performance of the Work, provided that any such claim, damage, loss, or expense (a) is attributable to bodily injury, sickness, disease or death, or to injury to or destruction of tangible property (other than the Work itself) including the loss of use resulting therefrom and (b) is caused in whole or in part by any negligent act or omission of CONTRACTOR, any Subcontractor, anyone directly or indirectly employed by any of them or anyone for whose acts any of them may be liable, regardless of whether or not it is caused in part by a party indemnified hereunder.

6.31 In any and all claims against OWNER or ENGINEER or any of their agents or employees by an employee of CONTRACTOR, any Subcontractor, anyone directly or indirectly employed by any of them or anyone for whose acts any of them may be liable, the indemnification obligation under paragraph 6.30 shall not be limited in any way by any limitation on the amount or type of damages, compensation, or benefits payable by or for CONTRACTOR or any Subcontractor under workmen's compensation acts, disability benefit acts or other employee benefit acts.

6.32 The obligations of CONTRACTOR under paragraph 6.30 shall not extend to the liability of ENGINEER, his agents, or employees arising out of (a) the preparation or approval of maps, drawings, opinions, reports, surveys, Change Orders, designs or specifications or (b) the giving of or the failure to give directions or instructions by ENGINEER, his agents, or employees provided such giving or failure to give is the primary cause of injury or damage.

ARTICLE 7 - WORK BY OTHERS

7.1 OWNER may perform additional work related to the Project by himself, or he may let other direct contracts therefore which shall contain General Conditions similar to these. CONTRACTOR shall afford the other CONTRACTOR'S who are parties to such direct contracts (or OWNER, if he is performing the additional work himself), reasonable opportunity for the introduction and storage of materials and equipment and the execution of work, and shall properly connect and coordinate his Work with theirs.

7.2 If any part of CONTRACTOR's Work depends for proper execution or results upon the work of any such other contractor (or OWNER), CONTRACTOR shall inspect and promptly report to ENGINEER in writing any defects or deficiencies in such work that render it unsuitable for such proper execution and results. His failure so to report shall constitute an acceptance of the other work as fit and proper for the relationship of his Work except as to defects and deficiencies which may appear in the other work after the execution of his Work.

7.3 CONTRACTOR shall do all cutting, fitting, and patching of his Work that may be required to make its several parts come together properly and fit it to receive or be received by such other work. CONTRACTOR shall not endanger any work by others by cutting, excavating, or otherwise altering their work and will only cut or alter their work with the written consent of ENGINEER and of the other CONTRACTOR'S whose work will be affected.

7.4 If the performance of additional work by other CONTRACTOR'S or OWNER is not noted in the Contract Documents prior to the execution of the contract, written notice thereof shall be given to CONTRACTOR prior to starting any such additional work. If CONTRACTOR believes that the performance of such additional work by OWNER or others involves him in additional expenses or entitles him to an extension of the Contract Time, he may make a claim therefore as provided in Articles 11 and 12.

ARTICLE 8 - OWNER'S RESPONSIBILITIES

8.1 OWNER shall issue all communications to CONTRACTOR through ENGINEER.

8.2 In case of termination of the employment of ENGINEER, OWNER shall appoint an engineer against whom CONTRACTOR makes no reasonable objections, whose status under the Contract Documents shall be that of the former ENGINEER. Any dispute in connection with such appointment shall be subject to arbitration.

8.3 OWNER shall furnish the data required of him under the Contract Documents promptly and shall make payments to CONTRACTOR promptly after they are due as provided in paragraph 14.4 and 14.13.

8.4 OWNER's duties in respect to providing lands and easements and providing engineering surveys to establish reference points are set forth in paragraphs 4.1 and 4.4. Paragraph 4.2 refers to OWNER's identifying and making available to CONTRACTOR copies of surveys and investigation reports of subsurface and latent physical conditions at the site or otherwise affecting performance of the Work which have been relied upon by ENGINEER in preparing the Drawings and Specifications.

8.5 OWNER's responsibilities in respect of liability and property insurance are set forth in paragraph 5.4 and 5.5.

8.6 In addition to his rights to request changes in the Work in accordance with Article 10, OWNER (especially in certain instances as provided in paragraph 10.4) shall be obligated to execute Change Orders.

8.7 OWNER's responsibility in respect of certain inspections, tests, and approvals is set forth in paragraph 13.2.

8.8 In connection with OWNER's right to stop Work or suspend Work, see paragraphs 13.8 and 15.1. Paragraph 15.2 deals with the OWNER's right to terminate services of CONTRACTOR under certain circumstances.

ARTICLE 9 - ENGINEER'S STATUS DURING CONSTRUCTION

OWNER's Representative:

9.1 ENGINEER will be OWNER's representative during the construction period. The duties and responsibilities and the limitations of authority of ENGINEER as OWNER's representative during construction are set forth in Articles 1 through 17 of these General Conditions and shall not be extended without written consent of OWNER and ENGINEER.

Visits to Site:

9.2 ENGINEER will make periodic visits to the site to observe the progress and quality of the executed Work and to determine, in general, if the Work is proceeding in accordance with the Contract Documents. He will not be required to make exhaustive or continuous on-site inspections to check the quality or quantity of the Work. His efforts will be directed toward providing assurance for OWNER that the completed Project will conform to the requirements of the Contract Documents. On the basis of his on-site observations as an experienced and qualified design professional, he will keep OWNER informed of the progress of the Work and will endeavor to guard OWNER against defects and deficiencies in the Work of CONTRACTOR'S.

Clarifications and Interpretations:

9.3 ENGINEER will issue with reasonable promptness such written clarifications or interpretations of the Contract Documents (in the form of Drawings or otherwise) as he may determine necessary, which shall be consistent with or reasonably inferable from the overall intent of the Contract Documents. If CONTRACTOR believes that a written clarification or interpretation entitles him to an increase in the Contract Price, he may make a claim therefore as provided in Article 11.

Rejecting Defective Work:

9.4 ENGINEER will have authority to disapprove or reject Work which is "defective" (which term is hereinafter used to describe Work that is unsatisfactory, faulty, or defective, or does not conform to the requirements of the Contract Documents or does not meet the requirements of any inspection, test or approval referred to in paragraph 13.2 or has been damaged prior to approval of final payment). He will also have authority to require special inspection or testing of the Work as provided in paragraph 13.7, whether or not the Work is fabricated, installed, or completed.

Shop Drawings, Change Orders and Payments:

9.5 In connection with ENGINEER's responsibility for Shop Drawings and samples, see paragraphs 6.23 through 6.28 inclusive.

9.6 In connection with ENGINEER's responsibility for Change Orders, see Articles 10, 11, and 12.

9.7 In connection with ENGINEER's responsibilities in respect of Applications for Payment, etc., see Article 14.

Resident Project Representative:

9.8 If OWNER and ENGINEER agree, ENGINEER will furnish a Resident Project Representative and assistants to assist ENGINEER in carrying out his responsibilities at the site. The duties, responsibilities, and limitations of authority of any such Resident Project Representative and assistants shall be as set forth in an exhibit to be incorporated in the Contract Documents.

Decisions on Disagreements:

9.9 ENGINEER will be the interpreter of the requirements of the Contract Documents and the judge of the performance thereunder. In his capacity as interpreter and judge he will exercise his best efforts to insure faithful performance by both OWNER and CONTRACTOR. He will not show partiality to either and will not be liable for the result of any interpretation or decision rendered in good faith. Claims, disputes, and other matters relating to the execution of or performance under the Contract Documents shall be referred to ENGINEER for decision; which he will render in writing within a reasonable time.

9.10 Either OWNER or CONTRACTOR may demand arbitration with respect to any such claim, dispute or other matter that has been referred to ENGINEER, except any which have been waived by the making or acceptance of final payment as provided in paragraph 14.16, such arbitration to be in accordance with Article 14.16, such arbitration to be in accordance with Article 16. However, no demand for arbitration of any such claim, dispute, or other matter shall be made until the earlier of (a) the date on which ENGINEER has rendered his decision or (b) the tenth day after the parties have presented their evidence to ENGINEER if he has not rendered his written decision before that date. No demand for arbitration shall be made later than thirty days after the date on which ENGINEER rendered his written decision in respect to the claim, dispute, or other matter as to which arbitration is sought; and the failure to demand arbitration within said thirty days' period shall result in ENGINEER's decision being final and binding upon OWNER and CONTRACTOR. If ENGINEER renders a decision after arbitration proceedings have been initiated, such decision may be entered as evidence but shall not supersede the arbitration proceedings, except where the decision is acceptable to the parties concerned.

Limitations on ENGINEER's Responsibilities:

9.11 Neither ENGINEER's authority to act under this Article 9 or elsewhere in the Contract Documents nor any decision made by him in good faith either to exercise or not exercise such authority shall give rise to any duty or responsibility of ENGINEER to CONTRACTOR, any Subcontractor, any materialman, fabricator, supplier, or any of their agents or employees any other person performing any of the Work.

9.12 ENGINEER will not be responsible for CONTRACTOR's means, methods, techniques, sequences or procedures of construction, or the safety precautions and programs incident thereto, and he will not be responsible for CONTRACTOR's failure to perform the Work in accordance with the Contract Documents.

9.13 ENGINEER will not be responsible for the acts or omissions of CONTRACTOR, or any Subcontractors, or any of his or their agents or employees, or any other persons at the site or otherwise performing any of the Work.

ARTICLE 10 - CHANGES IN THE WORK

10.1 Without invalidating the Agreement, OWNER may, at any time or from time to time, other additions, deletions, or revisions in the Work; these will be authorized by Change Orders. Upon receipt of a Change Order, CONTRACTOR shall proceed with the Work involved. All such Work shall be executed under the applicable conditions of the Contract Documents. If any Change Order causes an increase or decrease in the Contract Price or an extension or shortening of the Contract Time, an equitable adjustment will be made as provided in Article 11 or Article 12 on the basis of a claim made by either party.

10.2 ENGINEER may authorize minor changes or alterations in the Work not involving extra cost and not inconsistent with the overall intent of the Contract Documents. These may be accomplished by a Field Order. If CONTRACTOR believes that any minor change or alteration authorized by ENGINEER entitles him to an increase in the Contract Price, he may make a claim therefore as provided in Article 11.

10.3 Additional Work performed by CONTRACTOR without authorization of a Change Order will not entitle him to an increase in the Contract Price or an extension of the Contract Time, except in the case of an emergency as provided in paragraph 6.22 and except as provided in paragraphs 10.2 and 13.7.

10.4 OWNER shall execute appropriate Change Orders prepared by ENGINEER covering changes in the Work to be performed as provided in paragraph 4.3, and Work performed in an emergency as provided in paragraph 6.22 and any other claim of CONTRACTOR for a change in the Contract Time or the Contract Price which is approved by ENGINEER.

10.5 It is CONTRACTOR's responsibility to notify his Surety of any changes affecting the general scope of the Work or change in the Contract Price and the amount of the applicable Bonds shall be adjusted accordingly. CONTRACTOR shall furnish proof of such adjustment to OWNER.

ARTICLE 11 - CHANGE OF THE CONTRACT PRICE

11.1 The Contract Price constitutes the total compensation payable to CONTRACTOR for performing the Work. All duties, responsibilities, and obligations assigned to or undertaken by CONTRACTOR shall be at his expense without change in the Contract Price.

11.2 The Contract Price may only be changed by a Change Order. Any claim for an increase in the Contract Price shall be based on written notice delivered to OWNER and ENGINEER within fifteen days of the occurrence of the event giving rise to the claim. Notice of the amount of the claim with supporting data shall be delivered within forty-five days of such occurrence unless ENGINEER allows an additional period of time to ascertain accurate cost data. All claims for adjustments in the Contract Price shall be determined by ENGINEER if OWNER and CONTRACTOR cannot otherwise agree on the amount involved. Any change in the Contract Price resulting from any such claim shall be incorporated in a Change Order.

11.3 The value of any Work covered by a Change Order or of any claim for an increase or decrease in the Contract Price shall be determined in one of the following ways:

11.3.1 Where the Work involved is covered by unit prices contained in the Contract Documents, by application of unit prices to the quantities of the items involved.

11.3.2 By mutual acceptance of a lump sum.

11.3.3 On the basis of the Cost of the Work (determined as provided in paragraphs 11.4 and 11.5) plus a Contractor's Fee for overhead and profit (determined as provided in paragraph 11.6).

Cost of the Work:

11.4 The term Cost of the Work means the sum of all costs necessarily incurred and paid by the CONTRACTOR in the proper performance of the Work. Except as otherwise may be agreed to in writing by OWNER, such costs shall be in amounts no higher than those prevailing in the locality of the Project, shall include only the following items and shall not include any of the costs itemized in paragraph 11.5:

11.4.1 Payroll costs for employees in the direct employ of CONTRACTOR in the performance of the Work under schedules of job classifications agreed upon by OWNER and CONTRACTOR. Payroll costs for employees not employed full time on the Work shall be apportioned on the basis of their time spent on the Work. Payroll costs shall include, but not be limited to, salaries and wages plus the cost of fringe benefits which shall include social security contributions, unemployment, excise and payroll taxes, workmen's compensation, health and retirement benefits, bonuses, sick leave, vacation and holiday pay applicable thereto. Such employees shall include superintendents and foreman at the site. The expenses of performing work after regular working hours on Sunday or legal holidays shall be included in the above to the extent authorized by OWNER.

11.4.2 Cost of all materials and equipment furnished and incorporated in the Work, including costs of transportation and storage thereof, and manufacturers' field services required in connection therewith. All cash discounts shall accrue to CONTRACTOR unless OWNER deposits funds with CONTRACTOR with which to make payments, in which case the cash discounts shall accrue to OWNER. All trade discounts, rebates and refunds, and all returns from sale of surplus materials and equipment shall accrue to OWNER, and CONTRACTOR shall make provisions so that they may be obtained.

11.4.3 Payments made by CONTRACTOR to the Subcontractors for Work performed by Subcontractors. If required by OWNER, CONTRACTOR shall obtain competitive bids from Subcontractors acceptable to him and shall deliver such bids to OWNER who will then determine with the advice of ENGINEER, which bids will be accepted. If a subcontract provides that the Subcontractor is to be paid on the basis of Cost of the Work Plus a Fee, the Cost of the Work shall be determined in accordance with paragraphs 11.4 and 11.5. All subcontracts shall be subject to the other provisions of the Contract Documents insofar as applicable.

11.4.4 Costs of special consultants (including, but not limited to, engineers, architects, testing laboratories, surveyors, lawyers, and accountants) employed for services specifically related to the Work.

11.4.5 Supplemental costs including the following:

11.4.5.1 The proportion of necessary transportation, traveling, and subsistence expenses of CONTRACTOR's employees incurred in discharge of duties connected with the Work.

11.4.5.2 Cost, including transportation and maintenance, of all materials, supplies, equipment, machinery, appliances, office and temporary facilities at the site and hand tools not owned by the workmen, which are consumed in the performance of the Work, and cost less market value of such items used but not consumed which

remain the property of CONTRACTOR.

11.4.5.3 Rentals of all construction equipment and machinery and the parts thereof whether rented from CONTRACTOR or others in accordance with rental agreements approved by OWNER with the advice of ENGINEER, and the costs of transportation, loading, unloading, installation, dismantling and removal thereof--all in accordance with terms of said rental agreements. The rental of any such equipment, machinery or parts shall cease when the use thereof is no longer necessary for the Work.

11.4.5.4 Sales, use or similar taxes related to the Work, and for which CONTRACTOR is liable, imposed by any governmental authority.

11.4.5.5 Deposits lost for causes other than CONTRACTOR's negligence, royalty payments and fees for permits and licenses.

11.4.5.6 Losses, damages and expenses, not compensated by insurance or otherwise, sustained by CONTRACTOR in connection with the execution of, and to, the Work, provided they have resulted from causes other than the negligence of CONTRACTOR, any Subcontractor, or anyone directly or indirectly employed by any of them for whose acts any of them may be liable. Such losses shall include settlements made with the written consent and approval of OWNER. No such losses, damages and expenses shall be included in the Cost of the Work for the purpose of determining Contractor's Fee. If, however, any such loss or damage requires reconstruction and CONTRACTOR is placed in charge thereof, he shall be paid for his services a fee proportionate to that stated in paragraph 11.6.2.

11.4.5.7 The cost of utilities, fuel and sanitary facilities at the site.

11.4.5.8 Minor expenses such as telegrams, long distance telephone calls, telephone service at the site, expressage and similar petty cash items in connection with the Work.

11.4.5.9 Cost of premiums for bonds and insurance which OWNER is required to pay in accordance with paragraph 5.12.

11.5 The term Cost of the Work shall not include any of the following:

11.5.1 Payroll costs and other compensation of CONTRACTOR's officers, executives, principals (of partnership and sole proprietorships), general managers, engineers, architects, estimators, lawyers, auditors, accountants, purchasing and contracting agents, expeditors, timekeepers, clerks and other personnel employed by CONTRACTOR whether at the site or in his principal or a branch office for general administration of the Work and not specifically included in the schedule referred to in subparagraph 11.4.1--all of which are to be considered administrative costs covered by the Contractor's Fee.

11.5.2 Expenses of CONTRACTOR's principal and branch offices other than his office at the site.

11.5.3 Any part of CONTRACTOR's capital expenses, including interest on CONTRACTOR's capital employed for the Work and charges against CONTRACTOR for delinquent payments.

11.5.4 Cost of premiums for all bonds and for all insurance policies whether or not CONTRACTOR is required by the Contract Documents to purchase and maintain the same (except as otherwise provided in

subparagraph 11.4.5.9).

11.5.5 Costs due to negligence of CONTRACTOR, any Subcontractor, or anyone directly or indirectly employed by any of them or for whose acts any of them may be liable, including but not limited to, the correction of defective work, disposal of materials or equipment wrongly supplied and making good any damage to property.

11.5.6 Other overhead or general expense costs of any kind and the costs of any item not specifically and expressly included in paragraph 11.4.

Contractor's Fee:

11.6 The Contractor's Fee which shall be allowed to CONTRACTOR for his overhead and profit shall be determined as follows:

11.6.1 a mutually acceptable fixed fee; or if none can be agreed upon,

11.6.2 a fee based on the following percentages of the various portions of the Cost of the Work:

11.6.2.1 for costs incurred under paragraphs 11.4.1 and 11.4.2, the Contractor's Fee shall be ten percent,

11.6.2.2 for costs incurred under paragraph 11.4.3, the Contractor's Fee shall be five percent; and if a subcontract is on the basis of Cost of the Work Plus a Fee, the maximum allowable to the Subcontractor as a fee for overhead and profit shall be ten percent, and

11.6.2.3 no fee shall be payable on the tasks of costs itemized under paragraphs 11.4.4, 11.4.5 and 11.5.

11.7 The amount of credit to be allowed by CONTRACTOR to OWNER for any such change which results in a net decrease in cost, will be the amount of the actual net decrease. When both additions and credits are involved in any one change, the combined overhead and profit shall be figured on the basis of the net increase, if any.

11.8 Whenever the cost of any Work is to be determined pursuant to paragraphs 11.4 and 11.5, CONTRACTOR will submit in form prescribed by ENGINEER an itemized cost breakdown together with supporting data.

Cash Allowance:

11.9 It is understood that CONTRACTOR has included in the Contract Price all allowances so named in the Contract Documents and shall cause the Work so covered to be done by such materialmen, suppliers or Subcontractors and for such sums within the limit of the allowances as ENGINEER may approve. Upon final payment, the Contract Price shall be adjusted as required and an appropriate Change Order issued. CONTRACTOR agrees that the original Contract Price includes such sums as he deems proper for costs and profit on account of cash allowances. No demand for additional cost or profit in connection therewith will be allowed.

ARTICLE 12 - CHANGE OF THE CONTRACT TIME

12.1 The Contract Time may only be changed by a Change Order. Any claim for an extension in the Contract Time shall be based on written notice delivered to OWNER and ENGINEER within fifteen days of the occurrence of the event giving rise to the claim. Notice of the extent of the claim with supporting data shall be delivered within forty-five days of such occurrence unless ENGINEER allows an additional period of time to ascertain more accurate data. All claims for adjustment in the Contract Time shall be determined by ENGINEER if OWNER and CONTRACTOR cannot otherwise agree. Any change in the Contract Time resulting from any such claim shall be incorporated in a Change Order.

12.2 The Contract Time will be extended in an amount equal to time lost due to delays beyond the control of CONTRACTOR if he makes a claim therefore as provided in paragraph 12.1. Such delays shall include, but not be restricted to, acts or neglect by any separate contractor employed by OWNER, fires, floods, labor disputes, epidemics, abnormal weather conditions, or acts of God.

12.3 All time limits stated in the Contract Documents are of the essence of the Agreement. The provisions of this Article 12 shall not exclude recovery for damages (including compensation for additional professional services) for delay by either party.

ARTICLE 13 - WARRANTY AND GUARANTEE; TESTS AND INSPECTIONS; CORRECTION, REMOVAL OF ACCEPTANCE OF DEFECTIVE WORK

Warranty and Guarantee:

13.1 CONTRACTOR warrants and guarantees to OWNER and ENGINEER that all materials and equipment will be new unless otherwise specified and that all Work will be of good quality and free from faults or defects and in accordance with the requirements of the Contract Documents and of any inspections, tests or approvals referred to in paragraph 13.2. All unsatisfactory Work, all faulty or defective Work, and all Work not conforming to the requirements of the Contract Documents at the time of acceptance thereof or of such inspections, test or approvals, shall be considered defective. Prompt notice of all defects shall be given to CONTRACTOR. All defective Work, whether or not in place, may be rejected, corrected or accepted as provided in this Article 13.

Tests and Inspections:

13.2 If the Contract Documents, laws, ordinances, rules, regulations or orders of any public authority having jurisdiction require any Work to specifically be inspected, tested, or approved by some public body, CONTRACTOR shall assume full responsibility therefore, pay all costs in connection therewith and furnish ENGINEER the required certificates of inspection, testing or approval. All other inspections, tests and approvals required by the Contract Documents shall be performed by organizations acceptable to OWNER and CONTRACTOR and the costs thereof shall be borne by OWNER unless otherwise specified.

13.3 CONTRACTOR shall give ENGINEER timely notice of readiness of the Work for all inspections, tests or approvals. If any such Work required so to be inspected, tested or approved is covered without written approval of ENGINEER, it must, if requested by ENGINEER, be uncovered for observation, and such uncovering shall be at CONTRACTOR's expense unless CONTRACTOR has given ENGINEER timely notice of his intention to cover such Work and ENGINEER has not acted with reasonable promptness in response to such notice.

13.4 Neither observations by ENGINEER nor inspections, tests or approvals by persons other than CONTRACTOR shall relieve CONTRACTOR from his obligations to perform the Work in accordance with the requirements of the Contract Documents.

Access to Work:

13.5 ENGINEER and his representatives and other representatives of OWNER will at reasonable times have access to the Work. CONTRACTOR shall provide proper and safe facilities for such access and observation of the Work and also for any inspection or testing thereof by others.

Uncovering Work:

13.6 If any Work is covered contrary to the written request of ENGINEER, it must, if requested by ENGINEER, be uncovered for his observation and replaced at CONTRACTOR's expense.

13.7 If any Work has been covered which ENGINEER has not specifically requested to observe prior to its being covered, or if ENGINEER considers it necessary or advisable that covered Work be inspected or tested by others, CONTRACTOR, at ENGINEER's request, shall uncover, expose or otherwise make available for observation, inspection or testing as ENGINEER may require, that portion of the Work in question, furnishing all necessary labor,

material and equipment. If it is found that such Work is defective, CONTRACTOR shall bear all the expenses of such uncovering, exposure, observation, inspection and testing and of satisfactory reconstruction, including compensation for additional professional services, and an appropriate deductive Change Order shall be issued. If, however, such Work is not found to be defective, CONTRACTOR shall be allowed an increase in the Contract Price or an extension of the Contract Time, or both, directly attributable to such uncovering, exposure, observation, inspection, testing and reconstruction if he makes a claim therefore as provided in Articles 11, and 12.

OWNER May Stop the Work:

13.8 If the Work is defective, or CONTRACTOR fails to supply sufficient skilled workmen or suitable materials or equipment, or if CONTRACTOR fails to make prompt payments to Subcontractors or for labor, materials or equipment, OWNER may order CONTRACTOR to stop the Work, or any portion thereof, until the cause for such order has been eliminated; however, this right of OWNER to stop the Work shall not give rise to any duty on the part of OWNER to exercise this right for the benefit of CONTRACTOR or any other party.

Correction or Removal of Defective Work:

13.9 If required by ENGINEER prior to approval of final payment, CONTRACTOR shall promptly, without cost to OWNER and as specified by ENGINEER, either correct or defective Work, whether or not fabricated, installed or completed, or, if the Work has been rejected by ENGINEER, remove it from the site and replace it with nondefective Work. If CONTRACTOR does not correct such defective Work or remove and replace such rejected Work within a reasonable time, all as specified in a written notice from ENGINEER, OWNER may have the deficiency corrected or the rejected Work removed and replaced. All direct or indirect costs of such correction or removal and replacement, including compensation for additional professional services, shall be paid by CONTRACTOR, and an appropriate deductive Change Order shall be issued. CONTRACTOR shall also bear the expenses of making good all Work of others destroyed or damaged by his correction, removal or replacement of his defective Work.

One Year Correction Period:

13.10 If after the approval of final payment and prior to the expiration of one year after the date of Substantial Completion or such longer period of time as may be prescribed by law or by the terms of any applicable special guarantee required by the Contract Documents, any Work is found to be defective, CONTRACTOR shall promptly, without cost to OWNER and in accordance with OWNER's written instructions, either correct such defective Work, or, if it has been rejected by OWNER, remove it from the site and replace it with nondefective Work. If CONTRACTOR does not promptly comply with the terms of such instructions, OWNER may have the defective Work corrected or the rejected Work removed and replaced, and all direct and indirect costs of such removal and replacement, including compensation for additional professional services, shall be paid by CONTRACTOR.

Acceptance of Defective Work:

13.11 If instead of requiring correction or removal and replacement of defective Work, OWNER (and, prior to approval of final payment, also ENGINEER) prefers to accept it, he may do so. In such case, if acceptance occurs prior to approval of final payment, a Change Order shall be issued incorporating the necessary revisions in the Contract Documents, including appropriate reduction in the Contract Price; or, if the acceptance occurs after approval of final payment, an appropriate amount shall be paid by CONTRACTOR to OWNER.

Neglected Work by Contractor:

13.12 If CONTRACTOR shall fail to prosecute the Work in accordance with the Contract Documents, including any requirements of the progress schedule, OWNER, after seven days' written notice to CONTRACTOR may, without prejudice to any other remedy he may have, make good such deficiencies and the cost thereof (including compensation for additional professional services) shall be charged against CONTRACTOR if ENGINEER approves such action, in which case a Change Order shall be issued incorporating the necessary revisions in the Contract Documents including an appropriate reduction in the Contract Price. If the payments then or thereafter due CONTRACTOR are not sufficient to cover such amount, CONTRACTOR shall pay the difference to OWNER.

ARTICLE 14 - PAYMENTS AND COMPLETION

Schedules:

14.1 At least ten days prior to submitting the first Application for a progress payment, CONTRACTOR shall submit a progress schedule, a final schedule of Shop Drawing and a schedule of values of the Work. These schedules shall be satisfactory in form and substance to ENGINEER. The schedule of values shall include quantities and unit prices aggregating the Contract Price, and shall subdivide the Work into component parts in sufficient detail to serve as the basis for progress payments during construction. Upon approval of the schedules of values by ENGINEER, it shall be incorporated into the form of Application for Payment furnished by ENGINEER.

Application for Progress Payment:

14.2 At least ten days before such progress payment falls due (but not more often than once a month), CONTRACTOR shall submit to ENGINEER for review an Application for Payment filled out and signed by CONTRACTOR covering the Work completed as of the date of the Application and accompanied by such data and schedules as ENGINEER may reasonably require. If payment is requested on the basis of materials and equipment not incorporated in the Work but delivered and suitably stored at the site or at another location agreed to in writing, the Application for Payment shall also be accompanied by such data, satisfactory to OWNER, as will establish OWNER's title to the material and equipment and protect his interest therein, including applicable insurance. Each subsequent Application for Payment shall include an affidavit of CONTRACTOR stating that all previous progress payments received on account of the Work have been applied to discharge in full all of CONTRACTOR's obligations reflected in prior Applications for Payment.

Contractor's Warranty of Title:

14.3 CONTRACTOR warrants and guarantees that title to all Work, materials and equipment covered by any Application for Payment, whether incorporated in the Project or not, will pass to OWNER at the time of payment free and clear of all liens, claims, security interests and encumbrances (hereafter in these General Conditions referred to as "Liens").

Approval of Payments:

14.4 ENGINEER will, within ten days after receipt of each Application for Payment, either indicate in writing

his approval of payment and present the Application to OWNER, or return the Application to CONTRACTOR indicating in writing his reasons for refusing to approve payment. In the latter case, CONTRACTOR may make the necessary corrections and resubmit the Application. OWNER shall, within ten days of presentation to him of an approved Application for Payment, pay CONTRACTOR the amount approved by ENGINEER.

14.5 ENGINEER's approval of any payment requested in an Application for Payment will constitute a representation by him to OWNER, based on ENGINEER's on-site observations of the Work in progress as an experienced and qualified design professional and on his review of the Application for Payment and the accompanying data and schedules that the Work has progressed to the point indicated; that, to the best of his knowledge, information and belief, the quality of the Work is in accordance with the Contract Documents (subject to the evaluation of the Work as a functioning Project upon Substantial Completion, to the results of any subsequent tests called for in the Contract Documents and any qualifications stated in his approval); and that CONTRACTOR is entitled to payment of the amount approved. However, by approving any such payment ENGINEER will not thereby be deemed to have represented that he made exhaustive or continuous on-site inspections to check the quality or the quantity of the Work, or that he has reviewed the means, methods, techniques, sequences, or procedures of construction, or that he has made any examination to ascertain how or for what purpose CONTRACTOR has used the moneys paid or to be paid to him on account of the Contract Price, or that title to any Work, materials or equipment has passed to OWNER free and clear of any Liens.

14.6 ENGINEER's approval of final payment will constitute an additional representation by him to OWNER that the conditions precedent to CONTRACTOR's being entitled to final payment as set forth in paragraph 14.13 have been fulfilled.

14.7 ENGINEER may refuse to approve the whole or any part of any payment if, in his opinion, it would be incorrect to make such representations to OWNER. He may also refuse to approve any such payment, or, because of subsequently discovered evidence or the results of subsequent inspections or tests, nullify any such payment previously approved, to such extent as may be necessary in his opinion to protect OWNER from loss because:

14.7.1 the Work is defective, or completed Work has been damaged requiring correction or replacement,

14.7.2 claims or Liens have been filed or there is reasonable cause to believe such may be filed,

14.7.3 the Contract Price has been reduced because of Modifications,

14.7.4 OWNER has been required to correct defective Work or complete the Work in accordance with paragraph 13.11, or

14.7.5 of unsatisfactory prosecution of the Work, including failure to furnish acceptable submittals or to clean up.

Substantial Completion:

14.8 Prior to final payment, CONTRACTOR may, in writing to OWNER and ENGINEER, certify that the entire Project is substantially complete and request that ENGINEER issue a certificate of Substantial Completion. Within a reasonable time thereafter, OWNER, CONTRACTOR and ENGINEER shall make an inspection of the Project to determine the status of completion. If ENGINEER does not consider the Project substantially complete, he will notify CONTRACTOR in writing giving his reasons therefore. If ENGINEER considers the Project

substantially complete, he will prepare and deliver to OWNER a tentative certificate of Substantial Completion which shall fix the date of Substantial Completion and the responsibilities between OWNER and CONTRACTOR for maintenance, heat and utilities. There shall be attached to the certificate a tentative list of items to be completed or corrected before final payment, and the certificate shall fix the time within which such items shall be completed or corrected, said time to be within the Contract Time. OWNER shall have seven days after receipt of the tentative certificate during which he may make written objection to ENGINEER as to any provisions of the certificate or attached list. If, after considering such objections, ENGINEER concludes that the Project is not substantially complete, he will within fourteen days after submission of the tentative certificate to OWNER notify CONTRACTOR in writing, stating his reasons therefore. If, after consideration of OWNER's objections, ENGINEER considers the Project substantially complete, he will within said fourteen days execute and deliver to OWNER and CONTRACTOR a definitive certificate of Substantial Completion (with a revised tentative list of items to be completed or corrected) reflecting such changes from the tentative certificate as he believes justified after consideration of any objections from OWNER.

14.9 OWNER shall have the right to exclude CONTRACTOR from the Project after the date of Substantial Completion, but OWNER shall allow CONTRACTOR reasonable access to complete or correct items on the tentative list.

Partial Utilization:

14.10 Prior to final payment, OWNER may request CONTRACTOR in writing to permit him to use a specified part of the Project which he believes he may use without significant interference with construction of the other parts of the Project. If CONTRACTOR agrees, he will certify to OWNER and ENGINEER that said part of the Project is substantially complete and request ENGINEER to issue a certificate of Substantial Completion for that part of the Project. Within a reasonable thereafter OWNER, CONTRACTOR and ENGINEER shall make an inspection of that part of the Project to determine its status of completion. If ENGINEER does not consider that it is substantially complete, he will notify OWNER and CONTRACTOR in writing giving his reasons therefore. If ENGINEER considers that part of the Project to be substantially complete, he will execute and deliver to OWNER and CONTRACTOR a certificate to that effect, fixing the date of Substantial Completion as to that part of the Project, attaching thereto a tentative list of items to be completed or corrected before final payment and fixing the responsibility between OWNER and CONTRACTOR for maintenance, heat and utilities as to that part of the Project. OWNER shall have the right to exclude CONTRACTOR from any part of the Project which ENGINEER has so certified to be substantially complete, but OWNER shall allow CONTRACTOR reasonable access to complete or correct items on the tentative list.

Final Inspection:

14.11 Upon written notice from CONTRACTOR that the Project is complete, ENGINEER will make a final inspection with OWNER and CONTRACTOR and will notify CONTRACTOR in writing of all particulars in which this inspection reveals that the Work is incomplete or defective. CONTRACTOR shall immediately take such measures as are necessary to remedy such deficiencies.

Final Application for Payment:

14.12 After CONTRACTOR has completed all such corrections to the satisfaction of ENGINEER and delivered all maintenance and operating instructions, schedules, guarantees, Bonds, certificates of inspection and other documents--all as required by the Contract Documents, he may make application for final payment following the

procedure for progress payments. The final Application for Payment shall be accompanied by such data and schedules as ENGINEER may reasonably require, together with complete and legally effective releases or waivers (satisfactory to OWNER) of all Liens arising out of the Contract Documents and the labor and services performed and the material and equipment furnished thereunder. In lieu thereof and as approved by OWNER, CONTRACTOR may furnish receipts or releases in full; an affidavit of CONTRACTOR that the releases and receipts include all labor, services, materials and equipment for which a Lien could be filed, and that all payrolls, material and equipment bills, and other indebtedness connected with the Work for which OWNER or his property might in any way be responsible, have been paid or otherwise satisfied; and consent of the Surety, if any, to final payment. If any Subcontractor, materialman, fabricator or supplier fails to furnish a release or receipt in full, CONTRACTOR may furnish a Bond or other collateral satisfactory to OWNER to indemnify him against any Lien.

Approval of Final Payment:

14.13 If, on the basis of his observation and review of the Work during construction, his final inspection and his review of the final Application for Payment--all as required by the Contract Documents, ENGINEER is satisfied that the Work has been completed and CONTRACTOR has fulfilled all his obligations under the Contract Documents, he will, within ten days after receipt of the final Application for Payment, indicate in writing his approval of payment and present the Application to OWNER for payment. Thereupon ENGINEER will give written notice to OWNER and CONTRACTOR that the Work is acceptable subject to the provisions of paragraph 14.16. Otherwise, he will return the Application to CONTRACTOR, indicating in writing his reasons for refusing to approval final payment, in which case CONTRACTOR shall make the necessary corrections and resubmit the Application. OWNER shall, within ten days of presentation to him of an approved final Application for Payment, pay CONTRACTOR the amount approved by ENGINEER.

14.14 If after Substantial Completion of the Work final completion thereof is materially delayed through no fault of CONTRACTOR, and ENGINEER so confirms, OWNER shall, upon certification by ENGINEER, and without terminating the Agreement, make payment of the balance due for that portion of the Work fully completed and accepted. If the remaining balance for Work not fully completed or corrected is less than the retainage stipulated in the Agreement, and if Bonds have been furnished as required in paragraph 5.1, the written consent of the Surety to the payment of the balance due for that portion of the Work fully completed and accepted shall be submitted by the CONTRACTOR to the ENGINEER prior to certification of such payment. Such payment shall be made under the terms and conditions governing final payment, except that it shall not constitute a waiver of claims.

Contractor's Continuing Obligation:

14.15 CONTRACTOR's obligation to perform the Work and complete the Project in accordance with the Contract Documents shall be absolute. Neither approval or any progress or final payment by ENGINEER, nor the issuance of a certificate of Substantial Completion, nor any payment by OWNER to CONTRACTOR under the Contract Documents, nor any use or occupancy of the Project or any part thereof by OWNER, nor any act of acceptance by OWNER nor any failure to do so, nor any correction of defective work by OWNER shall constitute an acceptance of Work not in accordance with the Contract Documents.

Waiver of Claim:

14.16 The making and acceptance of final payment shall constitute:

14.16.1 a waiver of all claims by OWNER against CONTRACTOR other than those arising from unsettled Liens, from defective work appearing after final inspection pursuant to paragraph 14.11 or from failure to

comply with the requirements of the Contract Documents or the terms of any special guarantees specified therein, and

14.16.2 a waiver of all claims by CONTRACTOR against OWNER other than those previously made in writing and still unsettled.

ARTICLE 15 - SUSPENSION OF WORK AND TERMINATION

OWNER May Suspend Work:

15.1 OWNER may, at any time and without cause, suspend the Work or any portion thereof for a period of not more than ninety days by notice in writing to CONTRACTOR and ENGINEER which shall fix the date on which Work shall be resumed. CONTRACTOR shall resume the Work on the date so fixed. CONTRACTOR will be allowed an increase in the Contract Price or an extension of the Contract Time, or both, directly attributable to any suspension if he makes a claim therefore as provided in Articles 11 and 12.

OWNER May Terminate:

15.2 If CONTRACTOR is adjusted a bankrupt or insolvent, or if he makes a general assignment for the benefit of his creditors, or if a trustee or receiver is appointed for CONTRACTOR or for any of his property, or if he files a petition to take advantage of any debtor's act, or to reorganize under the bankruptcy or similar laws, or if he repeatedly fails to supply sufficient skilled workmen or suitable materials or equipment, or if he repeatedly fails to make prompt payments to Subcontractors or for labor, materials or equipment or if he disregards laws, ordinances, rules, regulations or orders of any public body having jurisdiction, or if he disregards the authority of ENGINEER, or if he otherwise violates any provision of the Contract Documents, then OWNER may, without prejudice to any other right or remedy and after giving CONTRACTOR and his Surety seven days' written notice, terminate the services of CONTRACTOR and take possession of the Project and of all materials, equipment, tools, construction equipment and machinery thereon owned by CONTRACTOR, and finish the Work by whatever method he may deem expedient. In such case CONTRACTOR shall not be entitled to receive any further payment until the Work is finished. If the unpaid balance of the Contract Price exceeds the direct and indirect costs of completing the Project, including compensation for additional professional services, such excess shall be paid to CONTRACTOR. If such costs exceed such unpaid balance, CONTRACTOR shall pay the difference to OWNER. Such costs incurred by OWNER shall be determined by ENGINEER and incorporated in a Change Order.

15.3 Where CONTRACTOR's services have been so terminated by OWNER, said terminations shall not affect any rights of OWNER against CONTRACTOR then existing or which may thereafter accrue. Any retention or payment of moneys by OWNER due CONTRACTOR will not release CONTRACTOR from liability.

15.4 Upon seven days' written notice to CONTRACTOR and ENGINEER, OWNER may, without cause and without prejudice to any right or remedy, elect to abandon the Project and terminate the Agreement. In such case, CONTRACTOR shall be paid for all Work executed and any expense sustained plus a reasonable profit.

Contractor May Stop Work or Terminate:

15.5 If, through no act or fault of CONTRACTOR, the Work is suspended for a period of more than ninety days by OWNER or under an order of court or other public authority, or ENGINEER fails to act on any Application

for Payment within thirty days after it is submitted, or OWNER fails to pay CONTRACTOR any sum approved by ENGINEER or awarded by arbitrators within thirty days of its approval and presentation, then CONTRACTOR may, upon seven days' written notice to OWNER and ENGINEER, terminate the Agreement and recover from OWNER payment for all Work executed and any expense sustained plus a reasonable profit. In addition and in lieu of terminating the Agreement, if ENGINEER has failed to act on an Application for Payment or OWNER has failed to make any payment as aforesaid, CONTRACTOR may upon seven days' notice to OWNER and ENGINEER stop the Work until he has been paid all amounts then due.

ARTICLE 16 - ARBITRATION

16.1 All claims, disputes and other matters in question arising out of, or relating to, this Agreement or the breach thereof except for claims which have been waived by the making or acceptance of final payment as provided by paragraph 14.16, shall be decided by arbitration in accordance with the Construction Industry Arbitration Rules of the American Arbitration Association then obtaining. This Agreement so to arbitrate shall be specifically enforceable under the prevailing arbitration law. The award rendered by the arbitrators shall be final, and judgment may be entered upon it in any court having jurisdiction thereof.

16.2 Notice of the demand for arbitration shall be filed in writing with the other party to the Agreement and with the American Arbitration Association, and a copy shall be filed with ENGINEER. The demand for arbitration shall be made within the thirty-day period specified in paragraph 9.10 where applicable, and in all other cases within a reasonable time after the claim, dispute or other matter in question has arisen, and in no event shall it be made after institution of legal or equitable proceedings based on such claim, dispute or other matter in question would be barred by the applicable statute of limitations.

16.3 CONTRACTOR will carry on the Work and maintain the progress schedule during any arbitration proceedings, unless otherwise agreed by him and OWNER in writing.

ARTICLE 17 - MISCELLANEOUS

Giving Notice:

17.1 Whenever any provision of the Contract Documents requires the giving of written notice it shall be deemed to have been validly given if delivered in person to the individual or to a member of the firm or to an officer of the corporation for whom it is intended, or if delivered at or sent by registered or certified mail, postage prepaid, to the last business address known to him who gives the notice.

Computation of Time:

17.2 When any period of time is referred to in the Contract Documents by days, it shall be computed to exclude the first and include the last day of such period. If the last day of such period falls on a Saturday or Sunday or on a day made a legal holiday by the law of the applicable jurisdiction, such day shall be omitted from the computation.

General:

17.3 All moneys not paid when due hereunder shall bear interest at the maximum rate allowed by law at the

place of the Project.

17.4 All Specifications, Drawings and copies thereof furnished by ENGINEER shall remain his property. They shall not be used on another Project, and, with the exception of those sets which have been signed in connection with the execution of the Agreement, shall be returned to him on request upon completion of the Project.

17.5 The duties and obligations imposed by these General Conditions and the rights and remedies available hereunder, and, in particular but without limitation, the warranties, guarantees and obligations imposed upon CONTRACTOR by paragraphs 6.30, 13.1, 13.10 and 14.3 and the rights and remedies available to OWNER and ENGINEER thereunder, shall be in addition to, and shall not be construed in any way as a limitation of, any rights and remedies available to them which are otherwise imposed or available by law, by special guarantees or by other provisions of the Contract Documents.

17.6 Should OWNER or CONTRACTOR suffer injury or damage to his person or property because of any error, omission or act of the other or of any of his employees or agents or others for whose acts he is legally liable, claim shall be made in writing to the other party within a reasonable time of the first observance of such injury or damage.

17.7 The Contract Documents shall be governed by the law of the place of the Project.

Excerpts from CA Labor Code

1771.1. (a) A contractor or subcontractor shall not be qualified to bid on, be listed in a bid proposal, subject to the requirements of Section 4104 of the Public Contract Code, or engage in the performance of any contract for public work, as defined in this chapter, unless currently registered and qualified to perform public work pursuant to Section 1725.5. It is not a violation of this section for an unregistered contractor to submit a bid that is authorized by Section 7029.1 of the Business and Professions Code or by Section 10164 or 20103.5 of the Public Contract Code, provided the contractor is registered to perform public work pursuant to Section 1725.5 at the time the contract is awarded.

1774. The contractor to whom the contract is awarded, and any subcontractor under him, shall pay not less than the specified prevailing rates of wages to all workmen employed in the execution of the contract.

1775.

(a) (1) The contractor and any subcontractor under the contractor shall, as a penalty to the state or political subdivision on whose behalf the contract is made or awarded, forfeit not more than two hundred dollars ($200) for each calendar day, or portion thereof, for each worker paid less than the prevailing wage rates as determined by the director for the work or craft in which the worker is employed for any public work done under the contract by the contractor or, except as provided in subdivision (b), by any subcontractor under the contractor.

(2) (A) The amount of the penalty shall be determined by the Labor Commissioner based on consideration of both of the following:

(i) Whether the failure of the contractor or subcontractor to pay the correct rate of per diem wages was a good faith mistake and, if so, the error was promptly and voluntarily corrected when brought to the attention of the contractor or subcontractor.

(ii) Whether the contractor or subcontractor has a prior record of failing to meet its prevailing wage obligations.

(B) (i) The penalty may not be less than forty dollars ($40) for each calendar day, or portion thereof, for each worker paid less than the prevailing wage rate, unless the failure of the contractor or subcontractor to pay the correct rate of per diem wages was a good faith mistake and, if so, the error was promptly and voluntarily corrected when brought to the attention of the contractor or subcontractor.

(ii) The penalty may not be less than eighty dollars ($80) for each calendar day, or portion thereof, for each worker paid less than the prevailing wage rate, if the contractor or subcontractor has been assessed penalties within the previous three years for failing to meet its prevailing wage obligations on a separate contract, unless those penalties were subsequently withdrawn or overturned.

(iii) The penalty may not be less than one hundred twenty dollars ($120) for each calendar day, or portion thereof, for each worker paid less than the prevailing wage rate, if the Labor Commissioner determines that the violation was willful, as defined in subdivision (c) of Section 1777.1.

(C) If the amount due under this section is collected from the contractor or subcontractor, any outstanding wage claim under Chapter 1 (commencing with Section 1720) of Part 7 of Division 2 against that contractor or subcontractor shall be satisfied before applying that amount to the penalty imposed on that contractor or subcontractor pursuant to this section.

(D) The determination of the Labor Commissioner as to the amount of the penalty shall be reviewable only for abuse of discretion.

(E) The difference between the prevailing wage rates and the amount paid to each worker for each calendar day or portion thereof for which each worker was paid less than the prevailing wage rate shall be paid to each worker by the contractor or subcontractor, and the body awarding the contract shall cause to be inserted in the contract a stipulation that this section will be complied with.

(b) If a worker employed by a subcontractor on a public works project is not paid the general prevailing rate of per diem wages by the subcontractor, the prime contractor of the project is not liable for any penalties under

subdivision (a) unless the prime contractor had knowledge of that failure of the subcontractor to pay the specified prevailing rate of wages to those workers or unless the prime contractor fails to comply with all of the following requirements:
(1) The contract executed between the contractor and the subcontractor for the performance of work on the public works project shall include a copy of the provisions of this section and Sections 1771, 1776, 1777.5, 1813, and 1815.
(2) The contractor shall monitor the payment of the specified general prevailing rate of per diem wages by the subcontractor to the employees, by periodic review of the certified payroll records of the subcontractor.
(3) Upon becoming aware of the failure of the subcontractor to pay his or her workers the specified prevailing rate of wages, the contractor shall diligently take corrective action to halt or rectify the failure, including, but not limited to, retaining sufficient funds due the subcontractor for work performed on the public works project.
(4) Prior to making final payment to the subcontractor for work performed on the public works project, the contractor shall obtain an affidavit signed under penalty of perjury from the subcontractor that the subcontractor has paid the specified general prevailing rate of per diem wages to his or her employees on the public works project and any amounts due pursuant to Section 1813.
(c) The Division of Labor Standards Enforcement shall notify the contractor on a public works project within 15 days of the receipt by the Division of Labor Standards Enforcement of a complaint of the failure of a subcontractor on that public works project to pay workers the general prevailing rate of per diem wages.
(Amended by Stats. 2011, Ch. 677, Sec. 1. Effective January 1, 2012.)

1776.
(a) Each contractor and subcontractor shall keep accurate payroll records, showing the name, address, social security number, work classification, straight time and overtime hours worked each day and week, and the actual per diem wages paid to each journeyman, apprentice, worker, or other employee employed by him or her in connection with the public work. Each payroll record shall contain or be verified by a written declaration that it is made under penalty of perjury, stating both of the following:
(1) The information contained in the payroll record is true and correct.
(2) The employer has complied with the requirements of Sections 1771, 1811, and 1815 for any work performed by his or her employees on the public works project.
(b) The payroll records enumerated under subdivision (a) shall be certified and shall be available for inspection at all reasonable hours at the principal office of the contractor on the following basis:
(1) A certified copy of an employee's payroll record shall be made available for inspection or furnished to the employee or his or her authorized representative on request.
(2) A certified copy of all payroll records enumerated in subdivision (a) shall be made available for inspection or furnished upon request to a representative of the body awarding the contract and the Division of Labor Standards Enforcement of the Department of Industrial Relations.
(3) A certified copy of all payroll records enumerated in subdivision (a) shall be made available upon request by the public for inspection or for copies thereof. However, a request by the public shall be made through either the body awarding the contract or the Division of Labor Standards Enforcement. If the requested payroll records have not been provided pursuant to paragraph (2), the requesting party shall, prior to being provided the records, reimburse the costs of preparation by the contractor, subcontractors, and the entity through which the request was made. The public may not be given access to the records at the principal office of the contractor.
(c) Unless required to be furnished directly to the Labor Commissioner in accordance with paragraph (3) of subdivision (a) of Section 1771.4, the certified payroll records shall be on forms provided by the Division of Labor Standards Enforcement or shall contain the same information as the forms provided by the division. The payroll records may consist of printouts of payroll data that are maintained as computer records, if the printouts contain the same information as the forms provided by the division and the printouts are verified in the manner

specified in subdivision (a).
(d) A contractor or subcontractor shall file a certified copy of the records enumerated in subdivision (a) with the entity that requested the records within 10 days after receipt of a written request.
(e) Except as provided in subdivision (f), any copy of records made available for inspection as copies and furnished upon request to the public or any public agency by the awarding body or the Division of Labor Standards Enforcement shall be marked or obliterated to prevent disclosure of an individual's name, address, and social security number. The name and address of the contractor awarded the contract or the subcontractor performing the contract shall not be marked or obliterated. Any copy of records made available for inspection by, or furnished to, a multiemployer Taft-Hartley trust fund (29 U.S.C. Sec. 186(c)(5)) that requests the records for the purposes of allocating contributions to participants shall be marked or obliterated only to prevent disclosure of an individual's full social security number, but shall provide the last four digits of the social security number. Any copy of records made available for inspection by, or furnished to, a joint labor-management committee established pursuant to the federal Labor Management Cooperation Act of 1978 (29 U.S.C. Sec. 175a) shall be marked or obliterated only to prevent disclosure of an individual's social security number.
(f) (1) Notwithstanding any other provision of law, agencies that are included in the Joint Enforcement Strike Force on the Underground Economy established pursuant to Section 329 of the Unemployment Insurance Code and other law enforcement agencies investigating violations of law shall, upon request, be provided nonredacted copies of certified payroll records. Any copies of records or certified payroll made available for inspection and furnished upon request to the public by an agency included in the Joint Enforcement Strike Force on the Underground Economy or to a law enforcement agency investigating a violation of law shall be marked or redacted to prevent disclosure of an individual's name, address, and social security number.
(2) An employer shall not be liable for damages in a civil action for any reasonable act or omission taken in good faith in compliance with this subdivision.
(g) The contractor shall inform the body awarding the contract of the location of the records enumerated under subdivision (a), including the street address, city, and county, and shall, within five working days, provide a notice of a change of location and address.
(h) The contractor or subcontractor has 10 days in which to comply subsequent to receipt of a written notice requesting the records enumerated in subdivision (a). In the event that the contractor or subcontractor fails to comply within the 10-day period, he or she shall, as a penalty to the state or political subdivision on whose behalf the contract is made or awarded, forfeit one hundred dollars ($100) for each calendar day, or portion thereof, for each worker, until strict compliance is effectuated. Upon the request of the Division of Labor Standards Enforcement, these penalties shall be withheld from progress payments then due. A contractor is not subject to a penalty assessment pursuant to this section due to the failure of a subcontractor to comply with this section.
(i) The body awarding the contract shall cause to be inserted in the contract stipulations to effectuate this section.
(j) The director shall adopt rules consistent with the California Public Records Act (Chapter 3.5 (commencing with Section 6250) of Division 7 of Title 1 of the Government Code) and the Information Practices Act of 1977 (Title 1.8 (commencing with Section 1798) of Part 4 of Division 3 of the Civil Code) governing the release of these records, including the establishment of reasonable fees to be charged for reproducing copies of records required by this section.
(Amended by Stats. 2014, Ch. 28, Sec. 71. Effective June 20, 2014.)

1777.5
(a) This chapter does not prevent the employment of properly registered apprentices upon public works.
(b) (1) Every apprentice employed upon public works shall be paid the prevailing rate of per diem wages for

apprentices in the trade to which he or she is registered and shall be employed only at the work of the craft or trade to which he or she is registered.
(2) Unless otherwise provided by a collective bargaining agreement, when a contractor requests the dispatch of an apprentice pursuant to this section to perform work on a public works project and requires the apprentice to fill out an application or undergo testing, training, an examination, or other preemployment process as a condition of employment, the apprentice shall be paid for the time spent on the required preemployment activity, including travel time to and from the required activity, if any, at the prevailing rate of per diem wages for apprentices in the trade to which he or she is registered. Unless otherwise provided by a collective bargaining agreement, a contractor is not required to compensate an apprentice for the time spent on preemployment activities if the apprentice is required to take a preemployment drug or alcohol test and he or she fails to pass that test.
(c) Only apprentices, as defined in Section 3077, who are in training under apprenticeship standards that have been approved by the Chief of the Division of Apprenticeship Standards and who are parties to written apprentice agreements under Chapter 4 (commencing with Section 3070) of Division 3 are eligible to be employed at the apprentice wage rate on public works. The employment and training of each apprentice shall be in accordance with either of the following:
(1) The apprenticeship standards and apprentice agreements under which he or she is training.
(2) The rules and regulations of the California Apprenticeship Council.
(d) If the contractor to whom the contract is awarded by the state or any political subdivision, in performing any of the work under the contract, employs workers in any apprenticeable craft or trade, the contractor shall employ apprentices in at least the ratio set forth in this section and may apply to any apprenticeship program in the craft or trade that can provide apprentices to the site of the public work for a certificate approving the contractor under the apprenticeship standards for the employment and training of apprentices in the area or industry affected. However, the decision of the apprenticeship program to approve or deny a certificate shall be subject to review by the Administrator of Apprenticeship. The apprenticeship program or programs, upon approving the contractor, shall arrange for the dispatch of apprentices to the contractor. A contractor covered by an apprenticeship program's standards shall not be required to submit any additional application in order to include additional public works contracts under that program. "Apprenticeable craft or trade," as used in this section, means a craft or trade determined as an apprenticeable occupation in accordance with rules and regulations prescribed by the California Apprenticeship Council. As used in this section, "contractor" includes any subcontractor under a contractor who performs any public works not excluded by subdivision (o).
(e) Before commencing work on a contract for public works, every contractor shall submit contract award information to an applicable apprenticeship program that can supply apprentices to the site of the public work. The information submitted shall include an estimate of journeyman hours to be performed under the contract, the number of apprentices proposed to be employed, and the approximate dates the apprentices would be employed. A copy of this information shall also be submitted to the awarding body, if requested by the awarding body. Within 60 days after concluding work on the contract, each contractor and subcontractor shall submit to the awarding body, if requested, and to the apprenticeship program a verified statement of the journeyman and apprentice hours performed on the contract. The information under this subdivision shall be public. The apprenticeship programs shall retain this information for 12 months.
(f) The apprenticeship program supplying apprentices to the area of the site of the public work shall ensure equal employment and affirmative action in apprenticeship for women and minorities.
(g) The ratio of work performed by apprentices to journeymen employed in a particular craft or trade on the public work may be no higher than the ratio stipulated in the apprenticeship standards under which the apprenticeship program operates if the contractor agrees to be bound by those standards. However, except as otherwise provided in this section, in no case shall the ratio be less than one hour of apprentice work for every five hours of journeyman work.

(h) This ratio of apprentice work to journeyman work shall apply during any day or portion of a day when any journeyman is employed at the jobsite and shall be computed on the basis of the hours worked during the day by journeymen so employed. Any work performed by a journeyman in excess of eight hours per day or 40 hours per week shall not be used to calculate the ratio. The contractor shall employ apprentices for the number of hours computed as above before the end of the contract or, in the case of a subcontractor, before the end of the subcontract. However, the contractor shall endeavor, to the greatest extent possible, to employ apprentices during the same time period that the journeymen in the same craft or trade are employed at the jobsite. When an hourly apprenticeship ratio is not feasible for a particular craft or trade, the Administrator of Apprenticeship, upon application of an apprenticeship program, may order a minimum ratio of not less than one apprentice for each five journeymen in a craft or trade classification.

(i) A contractor covered by this section who has agreed to be covered by an apprenticeship program's standards upon the issuance of the approval certificate, or who has been previously approved for an apprenticeship program in the craft or trade, shall employ the number of apprentices or the ratio of apprentices to journeymen stipulated in the applicable apprenticeship standards, but in no event less than the 1-to-5 ratio required by subdivision (g).

(j) Upon proper showing by a contractor that he or she employs apprentices in a particular craft or trade in the state on all of his or her contracts on an annual average of not less than one hour of apprentice work for every five hours of labor performed by journeymen, the Administrator of Apprenticeship may grant a certificate exempting the contractor from the 1-to-5 hourly ratio, as set forth in this section for that craft or trade.

(k) An apprenticeship program has the discretion to grant to a participating contractor or contractor association a certificate, which shall be subject to the approval of the Administrator of Apprenticeship, exempting the contractor from the 1-to-5 ratio set forth in this section when it finds that any one of the following conditions is met:

(1) Unemployment for the previous three-month period in the area exceeds an average of 15 percent.

(2) The number of apprentices in training in the area exceeds a ratio of 1 to 5.

(3) There is a showing that the apprenticeable craft or trade is replacing at least one-thirtieth of its journeymen annually through apprenticeship training, either on a statewide basis or on a local basis.

(4) Assignment of an apprentice to any work performed under a public works contract would create a condition that would jeopardize his or her life or the life, safety, or property of fellow employees or the public at large, or the specific task to which the apprentice is to be assigned is of a nature that training cannot be provided by a journeyman.

(l) If an exemption is granted pursuant to subdivision (k) to an organization that represents contractors in a specific trade from the 1-to-5 ratio on a local or statewide basis, the member contractors shall not be required to submit individual applications for approval to local joint apprenticeship committees, if they are already covered by the local apprenticeship standards.

(m) (1) A contractor to whom a contract is awarded, who, in performing any of the work under the contract, employs journeymen or apprentices in any apprenticeable craft or trade shall contribute to the California Apprenticeship Council the same amount that the director determines is the prevailing amount of apprenticeship training contributions in the area of the public works site. A contractor may take as a credit for payments to the council any amounts paid by the contractor to an approved apprenticeship program that can supply apprentices to the site of the public works project. The contractor may add the amount of the contributions in computing his or her bid for the contract.

(2) At the conclusion of the 2002–03 fiscal year and each fiscal year thereafter, the California Apprenticeship Council shall distribute training contributions received by the council under this subdivision, less the expenses of the Department of Industrial Relations for administering this subdivision, by making grants to approved apprenticeship programs for the purpose of training apprentices. The funds shall be distributed as follows:

(A) If there is an approved multiemployer apprenticeship program serving the same craft or trade and

geographic area for which the training contributions were made to the council, a grant to that program shall be made.
(B) If there are two or more approved multiemployer apprenticeship programs serving the same craft or trade and county for which the training contributions were made to the council, the grant shall be divided among those programs based on the number of apprentices from that county registered in each program.
(C) All training contributions not distributed under subparagraphs (A) and (B) shall be used to defray the future expenses of the Department of Industrial Relations for the administration and enforcement of apprenticeship standards and requirements under this code.
(3) All training contributions received pursuant to this subdivision shall be deposited in the Apprenticeship Training Contribution Fund, which is hereby created in the State Treasury. Upon appropriation by the Legislature, all moneys in the Apprenticeship Training Contribution Fund shall be used for the purpose of carrying out this subdivision and to pay the expenses of the Department of Industrial Relations.
(n) The body awarding the contract shall cause to be inserted in the contract stipulations to effectuate this section. The stipulations shall fix the responsibility of compliance with this section for all apprenticeable occupations with the prime contractor.
(o) This section does not apply to contracts of general contractors or to contracts of specialty contractors not bidding for work through a general or prime contractor when the contracts of general contractors or those specialty contractors involve less than thirty thousand dollars ($30,000).
(p) An awarding body that implements an approved labor compliance program in accordance with subdivision (b) of Section 1771.5 may, with the approval of the director, assist in the enforcement of this section under the terms and conditions prescribed by the director.
(Amended by Stats. 2016, Ch. 746, Sec. 1. Effective January 1, 2017.)

1813. The contractor or subcontractor shall, as a penalty to the state or political subdivision on whose behalf the contract is made or awarded, forfeit twenty-five dollars ($25) for each worker employed in the execution of the contract by the respective contractor or subcontractor for each calendar day during which the worker is required or permitted to work more than 8 hours in any one calendar day and 40 hours in any one calendar week in violation of the provisions of this article. In awarding any contract for public work, the awarding body shall cause to be inserted in the contract a stipulation to this effect. The awarding body shall take cognizance of all violations of this article committed in the course of the
execution of the contract, and shall report them to the Division of Labor Standards Enforcement.

1815. Notwithstanding the provisions of Sections 1810 to 1814, inclusive, of this code, and notwithstanding any stipulation inserted in any contract pursuant to the requirements of said sections, work performed by employees of contractors in excess of 8 hours per day, and 40 hours during any one week, shall be permitted upon public work upon compensation for all hours worked in excess of 8 hours per day at not less than 1 1/2 times the basic rate of pay.

General Notes:

A. The CONTRACTOR shall examine the working drawings: architectural, structural, mechanical and electrical, and shall notify the architect and/or engineers of any discrepancies he may find before proceeding with the work.

B. The CONTRACTOR shall verify and be responsible for all dimensions and conditions at the site and shall notify the designer of discrepancies between the actual conditions and information shown on the drawings before proceeding with the work.

C. All work shall conform to the minimum standards for the latest edition of the Uniform Building Code, Caltrans Standard General Specifications and such other regulating agencies exercising authority over any portion of the work.

D. Specifications (if included) are integral to the drawings. Notify designer before proceeding with any work if any disparity arises between drawings and specifications.

E. All work shall conform to the best practice prevailing in the various trades comprising the work.

F. Specific notes and details shall take precedence over General Notes and Typical Details. Dimensions shall supersede scale.

G. Details shown describe the general intent and character of the project. Any specific areas not drawn shall be similar to those details that are related in location, intent, or function.

H. All subcontractors shall be held responsible for all conditions, ordinances, code and requirements pertinent to their category of work as dictated by regulatory agencies.

I. All subcontractors shall be held responsible for any damage to another's work caused by subcontractor, its employees or agents.

J. General CONTRACTOR to maintain site in a clean and neat manner. Remove and legally dispose of all debris, rubbish, etc. Remove all materials from those not intended for their application, such as paint spatters, masking materials, asphalt, etc.

K. The Contractor shall contact the City of Nevada City, City Engineer to schedule a pre-construction meeting at least ten (10) working days prior to the start of construction (telephone 530-265-2496).

L. Contractor shall assume sole and complete responsibility for construction of this project, including safety of all persons and property. This requirement shall apply continuously and not be limited to normal working hours. The contractor shall defend, indemnify and hold the owner and the design engineer harmless from any and all liability, real or alleged in connection with the performance of the work on this project, excepting for liability arising from the intentional negligence of the owner or engineer.

M. The contractor is hereby notified that prior to commencing construction he is responsible for contacting all utility companies for verification at the construction site of the locations of all underground facilities where such facilities may conflict with placement of improvements shown on this plan. Call

'Underground Service Alert' at 800-642-2444 prior to any excavation.

N. The locations of all underground facilities shown on this plan are approximate. A reasonable effort has been made to locate and delineate all underground facilities. However, the design engineer assumes no liability for the accuracy of completeness of the existing facilities shown on hereon or for the existence of other underground utilities not shown on these plans. The contractor shall verify the location of all existing facilities interfering with the construction of improvements. If so directed by the design engineer, the contractor shall stop work immediately until remedial action can be taken. Any cost resulting from the contractor's failure to report and or failure to stop work as directed will be the responsibility of the contractor.

O. The contractor shall request construction staking for any phase of work no less than two working days prior to commencement of construction.

P. The contractor is responsible for the protection of all existing monuments and other survey markers during construction. Monuments disturbed, or lost, due to construction activities will require that the contractor have them replaced, in kind, by a licensed California Land Surveyor-who will be required to file either a Corner Record, or Record of Survey, with the County-whichever will meet the requirements of L.S. Act Section 8773

Q. The Contractor shall provide one complete set of <u>As-Built Drawings</u>. Any changes to the plans shall be shown on a clean set of drawings marked in red and given to the City Engineer at job completion.

Project Specifications

PROJECT LIMITS

Commercial Street and intersecting streets (including Union, Coyote, Main and Pine Street) in downtown Nevada City. Refer to improvement plans for limits of work.

PROJECT DESCRIPTION

The project consists of 1) water main replacement with new hydrants, valves and connection to existing water meters within the project limits; 2) sewer main replacement with new manholes, cleanouts and connection to service laterals; 3) new storm drain and 4) new conduit for future use.

CONSTRUCTION NOTES

Bid items shall include full compensation for furnishing all labor, materials, tools, equipment and incidentals for mobilization, traffic control, demolition, clearing, removal and disposal of demolition debris or excess materials, earthwork, compaction, shoring, dewatering, temporary bypass facilities, and all other incidental work as noted or shown on the plans. Restoration of disturbed areas with similar materials as exists prior to construction (i.e. concrete or asphalt) and repair of any damaged materials shall be provided by the contractor at their expense. Final Payment shall not be made until all cleanup and restoration work is complete.

Contractor shall provide written notice to Public Works Supt or City Engineer no fewer than two days in advance of any disruption of service including water, sewer, sidewalk or road access. The City will provide all notifications to the public. The contractor shall coordinate and verify with City staff to ensure that property owners, business owners and residents have been provided sufficient notice of the disruption of service. The Contractor shall not disrupt service without written approval from City staff. Any complaints or special requests from City residents, business owners or visitors shall immediately be directed to City staff so that City staff can respond appropriately and in a timely manner. The Contractor shall not make concessions or agreements or attempt to resolve conflicts with residents, property owners or business owners but shall refer all such items to the City Engineer or Public Works Superintendent.

Special Dates for Construction (public access to be provided as noted below):

- Intersection of Pine Street and Commercial Street shall be fully paved and open for Nevada City Village Market Day May 17, 2020 and Nevada City Bicycle Classic 2020 June 12, 13 & 14, 2020.
- All streets and sidewalks shall be fully paved and open for July 4th, 2020 and for Nevada City Summer Nights July 15, 22 & 29, 2020.
- All streets and sidewalks shall be open to public for First Friday Art Walk 4-10pm First Friday of the Month May 1st, June 5th, July 3rd & August 7th, 2020
- All streets and sidewalks shall be open to public for Nevada County Cycling Festival June 13 & 14, 2020
- Union Street and Coyote Street shall be fully paved and open for Farmers Market on First Saturday in May and every Saturday throughout June, July, August

TRAFFIC CONTOL

At all times when work is not being performed, streets and driveways shall be safe for through traffic and pedestrians. Lane closure shall comply with the Manual on Uniform Traffic Control Devices (CA MUTCD) current edition. Notify Public Works Supt or City Engineer no fewer than two days in advance of proposed lane closure or driveway closure. The contractor shall coordinate and verify with City staff that homeowners have been provided sufficient notice of any disruption of service including water, sewer or road access.

The Contractor shall provide and install traffic control signage and barricades as required for pedestrian and vehicular safety. Construction activity requiring lane closures shall conform to the following restrictions: The travel way on Pine, Main, Union and Coyote may be reduced to one 11 foot lane of traffic with two way stop control. Upon written request by the Contractor and as approved by the City Engineer, a full road closure with detours may be implemented with signage for Commercial Street (between 'Three Forks' driveway and Pine Street). At the end of each work shift, all traffic lanes shall be open for safe pubic use of the roadway. The Contractor shall provide access to parking lots, driveways, residences and businesses at all times unless otherwise approved by the City Engineer. Pedestrian, bicycle and delivery access shall be provided through construction areas at all times, unless otherwise approved by the City Engineer.

MATERIAL NOTES

Aggregate Base shall be Class 2, 3/4" maximum grading, conforming to standard specs. Section 26, placed at 95% Relative Compaction.

Asphalt material shall be Type A or B 1/2-inch maximum medium gradation and shall conform to the provisions in Sections39. "Asphalt Concrete," of the Standard Specifications and these Special Provisions. Asphalt cement shall be grade PG 64-16 conforming to the requirements of Section 92 of the Standard Specifications. Asphalt paving to include "T-Section" edge grind/overlay of 8"-12" width and 1" depth (beyond sawcut line) where adjoining existing asphalt.

WATER LINE PIPE AND FITTINGS

Contractor shall provide and install all material necessary for the project including tubing, and pipe, horizontal and vertical elbows, short pipe pieces, corporation stops, piping connections, couplings, jointing materials, warning tape, valve box and lid, restrained joints, thrust blocks, locating wire, warning tape, excavation, bedding and backfill. Water pipe 4" and larger shall be CL150 C900. Water pipe smaller than 4" shall be PE polyethylene water supply line. Flushing, disinfection testing and pressure testing shall be provided.

Trench backfill shall consist of sand bedding around pipe per Standard Specifications and trench zone backfill from top of sand bedding to bottom of roadway pavement section with compacted aggregate base.

WATER SERVICES

New saddles and taps will be Corporation Stops with a double brass saddle for DIP water main or double stainless steel saddle for PVC water main. Water service will be shut off and restarted by City personnel. Each shut off beyond 8 hours will result in a charge of $70 per hour with a 4hour minimum.

B-16 Water Meter boxes shall be provided by the contractor and placed and centered on water meters. Meter will be provided by the City and shall be installed by the contractor. Contractor shall be responsible for removal and disposal of debris, traffic control, testing, and flushing and tie-in pipe connections.

HYDRANTS

Contractor shall provide and install all material necessary for hydrant assembly including valve, DIP Piping, Fittings and Thrust Blocks. A 6" valve shall be provided. Where there is no curb, two protective bollards shall be provided.

SEWER LINE PIPE AND FITTINGS

PVC Gravity Sewer Piping: SDR25 for Under Ground Sewer Pipe

Pipe and Fittings: PVC SDR-35 shall conform to ASTM D 3034 for diameters from 4" to 15" with integral-bell gasket joints. Rubber gaskets shall be factory installed and conform to ASTM F 477. Pipe joints shall conform to ASTM D 3212.

Contractor shall provide and install all material necessary for the project including pipe, fittings, wyes, pipe connections, pipe supports, warning tape, trench resurfacing, excavation, bedding and backfill. Hydrostatic test, mandrel testing and/or television testing shall be provided as required by the City Engineer.

Trench backfill shall consist of sand bedding around pipe per Standard Specifications and trench zone backfill from top of sand bedding to bottom of roadway pavement section with compacted aggregate base.

SEWER LATERALS / CLEANOUTS

Contractor shall provide and install all material necessary for sewer services with wye fitting, connections to existing sewer and cleanout. Cleanouts shall be installed for each building lateral (paid as part of service line bid item) and on the upstream side of any fitting with 45 degree or greater bend and at the end of a City maintained lateral with 4 or more connections. Cleanouts shall be boxed to grade with a cast iron lid.

STORM DRAIN

Contractor shall provide and install all material necessary for storm drain facilities, including grouted joints for manholes (inside and out), concrete collars, pipe connections or concrete collars, bedding and backfill. Storm Drain Pipe shall be dual wall HDPE pipe (with smooth interior wall and corrugated exterior) or PVC SDR-35 with gasketed joints.

BID ADDENDUM NO. 1 CITY OF NEVADA CITY

This bid addendum is for the following project:

COMMERCIAL STREET PHASE 1 WATER, SEWER AND STORM DRAIN

Bid Documents are revised as follows. Bidders shall acknowledge receipt of this addendum on the Bid Proposal.

Revisions to Bid Schedule:

- Bid Item No. 20 was omitted.
- Note was added to Bid Schedule: (T-grind is not required on the portion of Commercial Street beginning at address 228 Commercial and ending at address 246 Commercial. T-grind shall be provided at all other locations.)

No Change to Bid Date

No Change to other bid documents

Attachments: Bid Schedule

DATED: Feb. 28, 2020

CITY OF NEVADA CITY

Bryan McAlister

Bryan McAlister, P.E.

City Engineer

BID SCHEDULE

CITY OF NEVADA CITY
COMMERCIAL STREET PHASE 1 WATER, SEWER AND STORM DRAIN

No.	Quantity	Unit	Item Description	Unit Price	Total Price
1.)	1	LS	Mobilization	$_____	$_____
2.)	1	LS	Traffic Control	$_____	$_____
3.)	520	LF	8” C900 Waterline	$_____	$_____
4.)	60	LF	6” C900 Waterline	$_____	$_____
5.)	9	EA	8’ Gate Valve Assembly	$_____	$_____
6.)	2	EA	6”’ Gate Valve Assembly	$_____	$_____
7.)	2	EA	4” Fire Service Line with Valve	$_____	$_____
8.)	2	EA	Fire Hydrant Assembly w Valve	$_____	$_____
9.)	2	EA	1-/2” Water Service Assembly	$_____	$_____
10.)	14	EA	1” Water Service Assembly	$_____	$_____
11.)	420	LF	8” SDR35 Sewerline	$_____	$_____
12.)	180	LF	6” SDR35 Sewerline	$_____	$_____
13.)	3	EA	Sewer Manhole	$_____	$_____
14.)	3	EA	Sewer Main Cleanout	$_____	$_____
15.)	11	EA	Sewer Service with Cleanout	$_____	$_____

BID SCHEDULE (cont.)

CITY OF NEVADA CITY
COMMERCIAL STREET PHASE 1 WATER, SEWER AND STORM DRAIN

16.)	330	LF	18” HDPE Storm Drain	$_____	$_____
17.)	60	LF	12” HDPE Storm Drain	$_____	$_____
18.)	1	EA	Junction Structure	$_____	$_____
19.)	3	EA	Type GO Curb Inlet	$_____	$_____
~~20.)~~	~~1~~	~~EA~~	~~Junction Structure~~	~~$_____~~	~~$_____~~
21.)	1	EA	Storm Drain Manhole	$_____	$_____
22.)	4	EA	Roof Drain w Cleanout	$_____	$_____
23.)	340	LF	Comm Line 2-2” Conduit	$_____	$_____
24.)	2	EA	Comm Box Type 1730	$_____	$_____
25.)	70	TN	Asphalt Trench Resurfacing	$_____	$_____
26.)	600	SF	Sidewalk Replacement	$_____	$_____

TOTAL: **$_____**

Note

1. Project shall be prevailing wages.
2. Unit price for pipe (water, sewer, storm drain) shall include all trench plates, shoring, abandonments or removal of existing pipe, potholing, sawcutting, fittings, staging/ bypass facilities, connections, excavation, bedding, backfill and testing.
3. Unit price for water service shall include all labor and materials to connect to existing service. Water Meter to be supplied by the City. All other materials and meter boxes to be provided by the contractor.
4. Unit price for trench resurfacing shall include **T-grind** and asphalt paving, surface preparation and compaction of agg. base. *(T-grind is not required on the portion of Commercial Street beginning at address 228 Commercial and ending at address 246 Commercial. T-grind shall be provided at all other locations.)*

Addendum 1
Bid Schedule Page 2

Pre Construction Conference

19 Feb 2020 - Commercial St.

1) William J Falcone — City of Ukiah
916-765-1010

2) Jeff Hansen — 530-273-3381
Hansen Bros.

3) Chris Schack — (530) 362-2450
PSCE

4) Cruz Christman — 913-2707
CME Services

5) Derek Hiatt — dhiatt@gohbe.com
Hansen Bros. — 530-813-7935

6. Pete Van Maine — 530-559-2871
DMCE Concrete — PETER@DMCEINC.COM

7 C&D Construction
Chuck

CITY OF NEVADA CITY
BID OPENING RESULTS

PROJECT: Commercial Street Phase I - Water, Sewer & Storm Drain DATE: 3/5/20

TIME OF BID OPENING: 3:00 A.M./P.M.

COMPANY NAME	BID AMOUNT
C & D Contractors	$ 525,553 —
Hanson Bros.	$ 626,653 —
CME	$ 454,613 —
PSCE	$ 746,036 —
	$
	$
	$
	$
	$
	$
	$
	$

CITY OF NEVADA CITY
BID OPENING SIGN-IN SHEET

PROJECT: Commercial St. Phase I Water, Sewer & Storm Drain DATE: 3/5/20

TIME OF BID OPENING: 3:00 A.M./P.M.

ATTENDEES – Please Sign-in and Print your name

Signature	Print Name	Phone #
	William Highsmith	530-277-0278
	William J. Falconi	
	LOREE MCCAY	530-265-2496
	DAVID PETTY	530-362-0812
	E. KIRK CHRISTMAN	
	DAVE KECK	913-0223
	BRYAN MCALISTER	

WATER, SEWER AND STORM DRAIN

Commercial Street Phase 1

GENERAL NOTES:

All materials and construction shall meet the requirements of the following specifications, codes and these improvement plans. The adopted standards of the governing agency shall govern in case of conflict.

State of California, Department of Transportation, Standard Specifications (Herein called standard specifications) and Standard Plans.

California Uniform Building Code: Current Edition

California Plumbing Code: Current Edition

Nevada City Standard Specifications: Current Edition

Nevada Irrigation District Development Standards and Standard Details, Current Edition

It is the responsibility of the contractor to obtain copies of these specifications and codes and have them available at the work location at all times. The contractor shall examine and become familiar with all parts of these specifications and codes that apply to this work. In general, the applicable sections of agency specifications and the standard specifications are not repeated in these notes. It is the contractor's responsibility to construct all facilities in accordance with the applicable agency requirements and the standard specifications.

The types, locations, sizes and depths of existing underground utilities as shown on the plans were obtained from sources of varying reliability. The contractor is cautioned that only actual excavation will reveal the types, extent, sizes, locations and depths of such such underground facilities. A reasonable effort has been made to locate and delineate all known underground facilities. However, neither the owner nor the Engineer can assume any responsibility for the completeness or accuracy of the delineation of such underground facilities nor for the existence of other buried objects or facilities which may be encountered but are not shown on these plans.

The contractor is responsible for contacting the utility companies or appropriate agencies with facilities in the area, and requesting a verification at the construction site where such utilities may conflict with the placement of improvements shown on these plans.

All existing utilities shall be marked prior to beginning any excavation or trenching. Contact the Underground Service Alert at 800–642–2444 for the marking of existing utility locations.

The contractor shall immediately notify the Engineer at (530) 265–2496 X126 if there is a conflict between any existing utilities and new construction as shown on these plans.

When the contractor's operations temporarily interfere with the existing flow of sewage, water, gas, electricity, telephone communication, or the operation of any other utility, the contractor shall provide, or make arrangements for satisfactory bypass facilities.

The contractor shall request permission to interfere with said utilities by applying to the related utility and shall comply with their recommendations and ordinances in each case. Said bypass facilities shall be so constructed as to provide a noninterruptive service of said utility.

Public safety and traffic control shall be provided in accordance with **City** requirements and Caltrans Standards. Safe vehicular and pedestrian access shall be provided at all times during construction.

Flagmen and traffic handling devices shall be provided at the contractor expense in accordance with Manual on Uniform Traffic Control Devices, or MUTCD.

During the progress of the work, the contractor shall keep the job site in a clean and orderly condition. Excess or unsuitable material shall be removed from the job site. Spillage and trackage resulting from hauling along or across existing streets or roads shall be removed immediately by the contractor. Dust and mud control shall be provided at all times including evenings, weekends, and holidays. All existing and new drainage facilities including gutters and roadside ditches shall be kept clean and free of debris at all times including evenings, weekends, and holidays.

Any offhaul and disposal of debris from clearing, demolition of asphalt or concrete, excess pipe materials or excess dirt shall be disposed of at an authorized disposal site (not on City property) at the contractors expense.

Any grading disturbance areas on public or private property shall be restored to pre–project conditions as approved by the City Engineer.

PERMITS AND NOTICES

The Contractor shall be responsible for insuring that all necessary permits have been obtained and all required notices have been given prior to commencement of work, including:
- An approved set of plans shall be available at the project site at all times during the work.
- All utility companies affected by the project shall be notified in advance of the work.
- "Underground Service Alert" (phone 800–642–2444) shall be notified at least two (2) working days in advance of any excavation.
- The Contractor shall be responsible for receiving rights–of–entry for any work done on private property or in non–public easements.
- The Contractor shall be responsible for notifying homeowners and businesses of any required shut–offs with a 48 hour notice.

WATER SYSTEM NOTES

1. ALL WATER SYSTEM INSTALLATIONS SHALL COMPLY WITH CITY STANDARDS. WHERE NO SPECIFICATION OR DETAIL IS PROVIDED, ALL WORK SHALL COMPLY WITH NEVADA IRRIGATION DISTRICT (NID) SPECIFICATIONS, AND STANDARD DETAILS.
2. THE WATER SYSTEM SHALL BE INSPECTED AND TESTED ACCORDING TO NID REQUIREMENTS.
3. SEWER AND WATER SEPARATION SHALL CONFORM TO THE "CRITERIA FOR THE SEPARATION WATER OF WATER MAINS AND SANITARY SEWERS" OF THE STATE OF CALIFORNIA DEPARTMENT OF HEALTH SERVICES.
4. ALL WATER MAINS SHALL BE PVC PIPE C900, DR18, UNLESS OTHERWISE SHOWN.

SEWER SYSTEM NOTES

1. THE SEWER SYSTEM SHALL BE INSPECTED AND TESTED ACCORDING TO CITY REQUIREMENTS.
2. BACKFILL AND PIPE BEDDING SHALL COMPLY WITH CITY REQUIREMENTS.
5. CONTRACTOR TO INSTALL CHIMNEY SEALS ON ALL SEWER MANHOLES.
6. CONTRACTOR TO INSTALL RAM–NEK AND SEALER ON ALL SEWER MANHOLE RINGS AND RISERS.
7. ALL SEWER MAINS SHALL BE PVC PIPE SDR35, UNLESS OTHERWISE SHOWN.
8. EXISTING SANITARY SEWER FLOW MUST BE MAINTAINED AT ALL TIMES. CONTRACTOR SHALL PROVIDE WRITTEN CONSTRUCTION PLAN/SEQUENCE AND CONSTRUCTION SCHEDULE TO THE CONSULTING ENGINEER FOR APPROVAL BY THE CITY.

LOCATION MAP
NTS

DRY UTILITY NOTES

ALL VAULT FRAME AND LIDS SHALL BE H–20 INCIDENTAL TRAFFIC LOAD RATING WHEN LOCATED IN SIDEWALK OR LANDSCAPE AREAS AND SHALL BE H–20 FULL TRAFFIC LOADING WHEN LOCATED WITHIN STREET/PARKING AREA. NO AGENCY NAME SHALL APPEAR ON PRIVATE FACILITIES.
ALL VAULTS AND PULLBOXES SHALL BE GROUTED AND SEALED.
PLACE MIN. 6" DRAIN ROCK UNDER ALL PULLBOXES AND VAULTS.
PULL BOX/VAULTS SHOULD BE INSTALLED AT LOCATIONS SHOWN ON THE PLANS. HOWEVER, IF ADDITIONAL SWEEPS ARE USED AND/OR THE TOTAL NUMBER OF SWEEPS TOTALING 180 DEGREES, A PULLBOX NEEDS TO BE INSTALLED.

CONTRACTOR SHOULD PROVIDE A 3/8" NYLON CONTINUOUS PULL ROPE WITH SEQUENTIAL FOOT MARKINGS IN EACH CONDUIT. NO TYING OR SPLICING IS PERMITTED. LEAVE A MINIMUM OF 3 FOOT OF SECURED PULL ROPE IN EACH BOX OR VAULT.
CONDUIT SHOULD BE INSTALLED WITH A SLIGHT DRAIN SLOPE AWAY FROM THE BUILDINGS TO PREVENT THE WATER ACCUMULATION IN THE CONDUIT OR BUILDING.
THE BEND RADIUS OF THE SWEEPS MUST BE 10 TIMES THE INTERNAL CONDUIT DIAMETER.

SHEET INDEX

C1 COVER SHEET
C2 EXISTING UTILITIES / DEMO PLAN
C3 UTILITY PLAN
C4 TRENCH AND SEWER DETAILS
C5 WATER DETAILS
C6 WATER AND UTILITY DETAILS
C7 STORM DRAIN DETAILS

REGISTERED PROFESSIONAL ENGINEER
BRYAN K. McALISTER
C 058570
December 31, 2020
CIVIL
STATE OF CALIFORNIA

DATE SIGNED: 02–07–20

NO.	REVISIONS	DATE

DESIGNED: BKM
DRAWN: BKM
PROJ. NO:
DWG:commercial street design1
DATE: Feb. 2020

COMMERCIAL STREET - PHASE 1
WATER, SEWER AND STORM DRAIN
COVER SHEET
NEVADA CITY CALIFORNIA

CITY OF NEVADA CITY
317 BROAD STREET
NEVADA CITY, CALIFORNIA 95959
(530) 265-2496

© SIERRA LAND SOLUTIONS, INC. 2020

C1

DEMOLITION NOTES:

D1 REMOVE AND DISPOSE OF EXISTING WATERLINE (NEW STORM DRAIN ALIGNMENT)
D2 REMOVE AND REPLACE EXISTING WATERLINE (SEE UTILITY PLAN)
D3 REMOVE AND REPLACE WATER SERVICE BETWEEN MAIN LINE AND METER
D4 REMOVE AND REPLACE SEWER LINE (SEE UTILITY PLAN)
D5 REMOVE AND REPLACE SEWER LATERAL, CONNECT TO BUILDING LINE AND PROVIDE NEW CLEANOUT
D6 REMOVE PORTION OF EXISTING GRANITE STORM DRAIN CULVERT FOR NEW JUNCTION STRUCTURE
EXISTING GRANITE SHALL BE SALVAGED FOR FUTURE CITY USE, PROVIDE TRANSPORT TO CITY YARD

ADDITIONAL NOTES:

CONTRACTOR TO PROVIDE OFFSITE DISPOSAL OF ALL WASTE OR EXCESS MATERIAL. .

CONTRACTOR TO INSTALL TEMPORARY FENCING AS NEEDED TO SECURE THE WORK AREA FOR PEDESTRIAN SAFETY WITH SIDEWALK ACCESS TO ALL BUSINESSES DURING CONSTRUCTION.

LEGEND

- EXISTING GAS
- EXISTING WATER
- EXISTING SEWER
- EXISTING TELE/COMM
- EXISTING ELEC
- EXISTING STORM DRAIN
- LIMIT OF REMOVAL SEE UTILITY PLAN

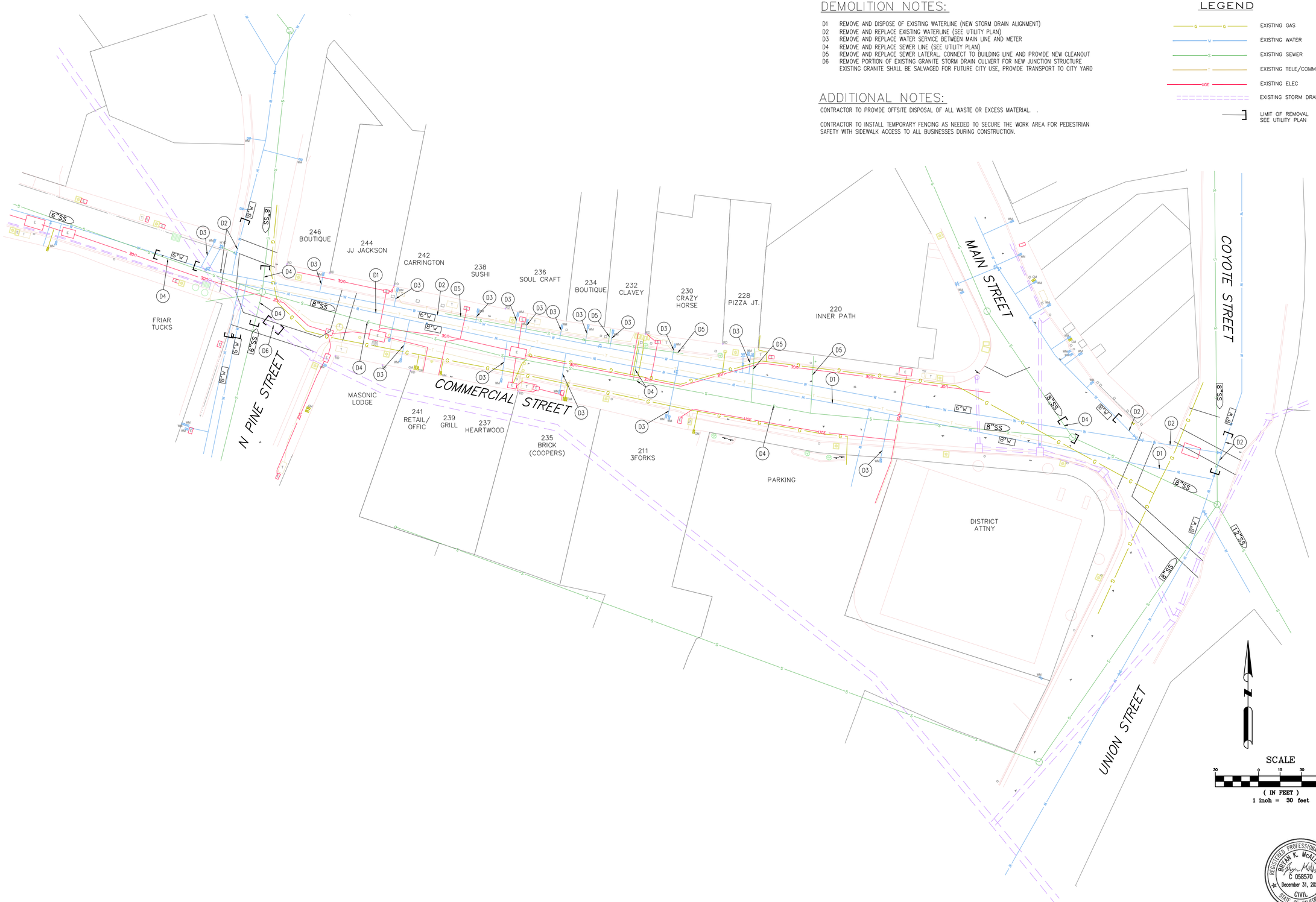

REGISTERED PROFESSIONAL ENGINEER
BRYAN K. McALISTER
C 058570
December 31, 2020
CIVIL
STATE OF CALIFORNIA

DATE SIGNED: 02-07-20

NO.	REVISIONS	DATE

DESIGNED: BKM
DRAWN: BKM
PROJ. NO:
DWG:commercial street design1
DATE: Feb. 2020

COMMERCIAL STREET - PHASE 1
WATER, SEWER AND STORM DRAIN
EXISTING UTILITIES / DEMO PLAN

NEVADA CITY CALIFORNIA

CITY OF NEVADA CITY
317 BROAD STREET
NEVADA CITY, CALIFORNIA 95959
(530) 265-2496

C2

© SIERRA LAND SOLUTIONS, INC. 2020

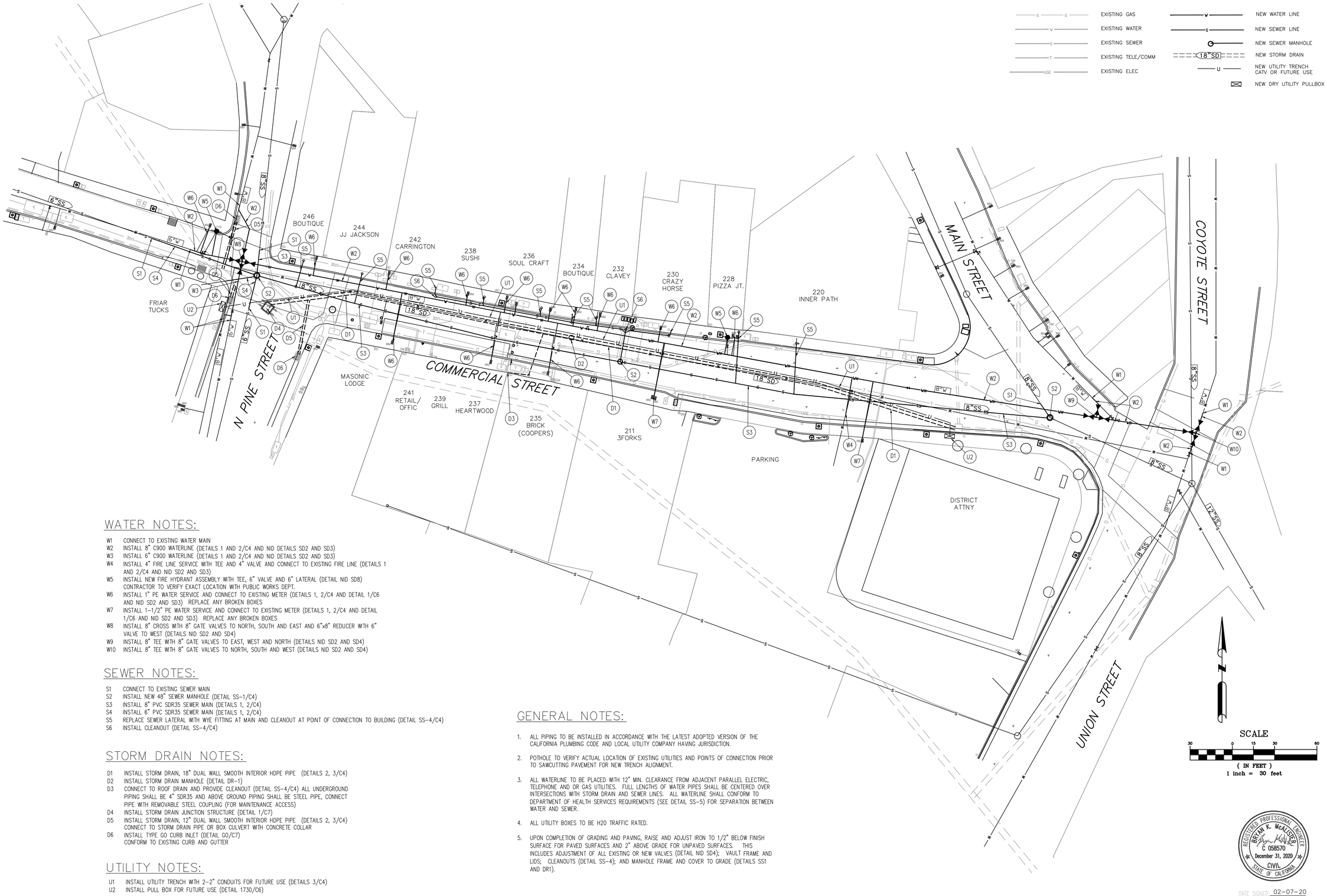

WATER NOTES:

- W1 CONNECT TO EXISTING WATER MAIN
- W2 INSTALL 8" C900 WATERLINE (DETAILS 1 AND 2/C4 AND NID DETAILS SD2 AND SD3)
- W3 INSTALL 6" C900 WATERLINE (DETAILS 1 AND 2/C4 AND NID DETAILS SD2 AND SD3)
- W4 INSTALL 4" FIRE LINE SERVICE WITH TEE AND 4" VALVE AND CONNECT TO EXISTING FIRE LINE (DETAILS 1 AND 2/C4 AND NID SD2 AND SD3)
- W5 INSTALL NEW FIRE HYDRANT ASSEMBLY WITH TEE, 6" VALVE AND 6" LATERAL (DETAIL NID SD8) CONTRACTOR TO VERIFY EXACT LOCATION WITH PUBLIC WORKS DEPT.
- W6 INSTALL 1" PE WATER SERVICE AND CONNECT TO EXISTING METER (DETAILS 1, 2/C4 AND DETAIL 1/C6 AND NID SD2 AND SD3) REPLACE ANY BROKEN BOXES
- W7 INSTALL 1-1/2" PE WATER SERVICE AND CONNECT TO EXISTING METER (DETAILS 1, 2/C4 AND DETAIL 1/C6 AND NID SD2 AND SD3) REPLACE ANY BROKEN BOXES
- W8 INSTALL 8" CROSS WITH 8" GATE VALVES TO NORTH, SOUTH AND EAST AND 6"x8" REDUCER WITH 6" VALVE TO WEST (DETAILS NID SD2 AND SD4)
- W9 INSTALL 8" TEE WITH 8" GATE VALVES TO EAST, WEST AND NORTH (DETAILS NID SD2 AND SD4)
- W10 INSTALL 8" TEE WITH 8" GATE VALVES TO NORTH, SOUTH AND WEST (DETAILS NID SD2 AND SD4)

SEWER NOTES:

- S1 CONNECT TO EXISTING SEWER MAIN
- S2 INSTALL NEW 48" SEWER MANHOLE (DETAIL SS-1/C4)
- S3 INSTALL 8" PVC SDR35 SEWER MAIN (DETAILS 1, 2/C4)
- S4 INSTALL 6" PVC SDR35 SEWER MAIN (DETAILS 1, 2/C4)
- S5 REPLACE SEWER LATERAL WITH WYE FITTING AT MAIN AND CLEANOUT AT POINT OF CONNECTION TO BUILDING (DETAIL SS-4/C4)
- S6 INSTALL CLEANOUT (DETAIL SS-4/C4)

STORM DRAIN NOTES:

- D1 INSTALL STORM DRAIN, 18" DUAL WALL SMOOTH INTERIOR HDPE PIPE (DETAILS 2, 3/C4)
- D2 INSTALL STORM DRAIN MANHOLE (DETAIL DR-1)
- D3 CONNECT TO ROOF DRAIN AND PROVIDE CLEANOUT (DETAIL SS-4/C4) ALL UNDERGROUND PIPING SHALL BE 4" SDR35 AND ABOVE GROUND PIPING SHALL BE STEEL PIPE, CONNECT PIPE WITH REMOVABLE STEEL COUPLING (FOR MAINTENANCE ACCESS)
- D4 INSTALL STORM DRAIN JUNCTION STRUCTURE (DETAIL 1/C7)
- D5 INSTALL STORM DRAIN, 12" DUAL WALL SMOOTH INTERIOR HDPE PIPE (DETAILS 2, 3/C4) CONNECT TO STORM DRAIN PIPE OR BOX CULVERT WITH CONCRETE COLLAR
- D6 INSTALL TYPE GO CURB INLET (DETAIL GO/C7) CONFORM TO EXISTING CURB AND GUTTER

UTILITY NOTES:

- U1 INSTALL UTILITY TRENCH WITH 2-2" CONDUITS FOR FUTURE USE (DETAILS 3/C4)
- U2 INSTALL PULL BOX FOR FUTURE USE (DETAIL 1730/C6)

GENERAL NOTES:

1. ALL PIPING TO BE INSTALLED IN ACCORDANCE WITH THE LATEST ADOPTED VERSION OF THE CALIFORNIA PLUMBING CODE AND LOCAL UTILITY COMPANY HAVING JURISDICTION.
2. POTHOLE TO VERIFY ACTUAL LOCATION OF EXISTING UTILITIES AND POINTS OF CONNECTION PRIOR TO SAWCUTTING PAVEMENT FOR NEW TRENCH ALIGNMENT.
3. ALL WATERLINE TO BE PLACED WITH 12" MIN. CLEARANCE FROM ADJACENT PARALLEL ELECTRIC, TELEPHONE AND OR GAS UTILITIES. FULL LENGTHS OF WATER PIPES SHALL BE CENTERED OVER INTERSECTIONS WITH STORM DRAIN AND SEWER LINES. ALL WATERLINE SHALL CONFORM TO DEPARTMENT OF HEALTH SERVICES REQUIREMENTS (SEE DETAIL SS-5) FOR SEPARATION BETWEEN WATER AND SEWER.
4. ALL UTILITY BOXES TO BE H20 TRAFFIC RATED.
5. UPON COMPLETION OF GRADING AND PAVING, RAISE AND ADJUST IRON TO 1/2" BELOW FINISH SURFACE FOR PAVED SURFACES AND 2" ABOVE GRADE FOR UNPAVED SURFACES. THIS INCLUDES ADJUSTMENT OF ALL EXISTING OR NEW VALVES (DETAIL NID SD4); VAULT FRAME AND LIDS; CLEANOUTS (DETAIL SS-4); AND MANHOLE FRAME AND COVER TO GRADE (DETAILS SS1 AND DR1).

REGISTERED PROFESSIONAL ENGINEER
BRYAN K. McALISTER
C 058570
December 31, 2020
CIVIL
STATE OF CALIFORNIA

DATE SIGNED: 02-07-20

NO.	REVISIONS	DATE

DESIGNED: BKM
DRAWN: BKM
PROJ. NO:
DWG:commercial street design1
DATE: Feb. 2020

COMMERCIAL STREET - PHASE 1
WATER, SEWER AND STORM DRAIN UTILITY PLAN

NEVADA CITY CALIFORNIA

CITY OF NEVADA CITY
317 BROAD STREET
NEVADA CITY, CALIFORNIA 95959
(530) 265-2496

C3

© SIERRA LAND SOLUTIONS, INC. 2020

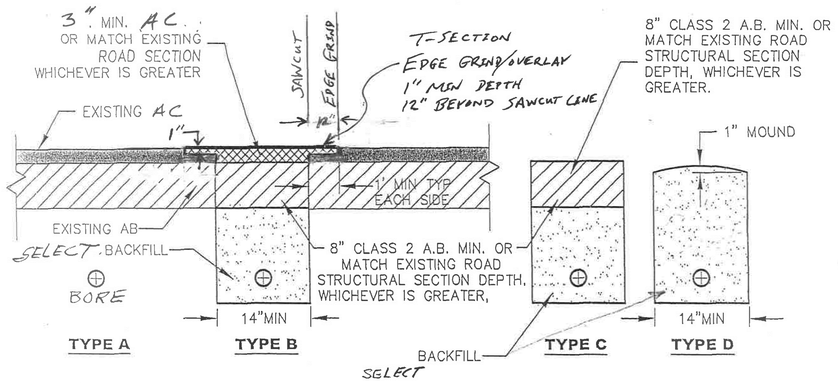

TYPE A: PAVEMENT SURFACES LESS THAN 5 YEARS OLD, SURFACE TREATMENTS LESS THAN 3 YEARS OLD, & MAJOR THOROUGHFARES WITH HIGH QUALITY RIDING SURFACES

TYPE B: PAVEMENT GREATER THAN 5 YEARS OLD

TYPE C: UNSURFACED ROAD SHOULDER OR OTHER AREAS SUBJECT TO TRAFFIC LOADS

TYPE D: OUTSIDE ROADWAY, NOT SUBJECT TO TRAFFIC LOADS

2 TRENCH RESURFACING DETAIL

NTS

DEPARTMENT OF PUBLIC WORKS

TRANSVERSE TRENCH RESURFACING SECTIONS

DATE:

SCALE: NOT TO SCALE

PLATE

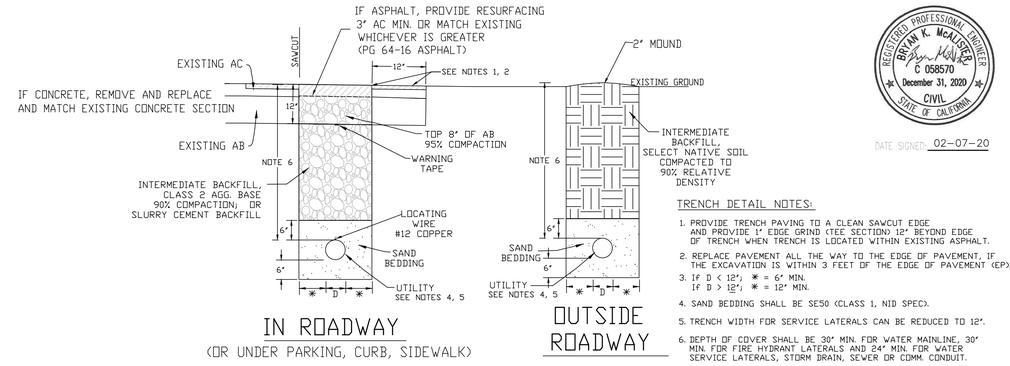

REGISTERED PROFESSIONAL ENGINEER BRYAN K. McALISTER C 058570 December 31, 2020 CIVIL STATE OF CALIFORNIA

DATE SIGNED: 02-07-20

TRENCH DETAIL NOTES:

1. PROVIDE TRENCH PAVING TO A CLEAN SAWCUT EDGE AND PROVIDE 1" EDGE GRIND (TEE SECTION) 12" BEYOND EDGE OF TRENCH WHEN TRENCH IS LOCATED WITHIN EXISTING ASPHALT.
2. REPLACE PAVEMENT ALL THE WAY TO THE EDGE OF PAVEMENT, IF THE EXCAVATION IS WITHIN 3 FEET OF THE EDGE OF PAVEMENT (EP).
3. IF D < 12"; ✱ = 6" MIN.
   IF D > 12"; ✱ = 12" MIN.
4. SAND BEDDING SHALL BE SE50 (CLASS 1, NID SPEC).
5. TRENCH WIDTH FOR SERVICE LATERALS CAN BE REDUCED TO 12".
6. DEPTH OF COVER SHALL BE 30" MIN. FOR WATER MAINLINE, 30" MIN. FOR FIRE HYDRANT LATERALS AND 24" MIN. FOR WATER SERVICE LATERALS, STORM DRAIN, SEWER OR COMM. CONDUIT.

1 TYPICAL TRENCH DETAIL

NTS

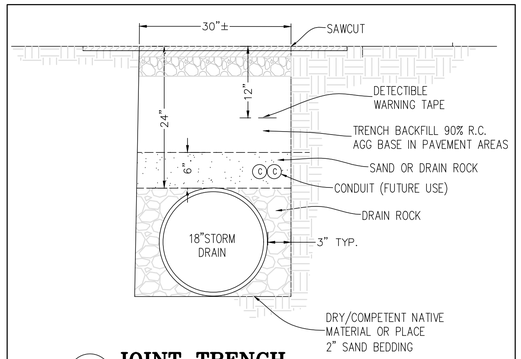

3 JOINT TRENCH

Storm Drain and Dry Utilities

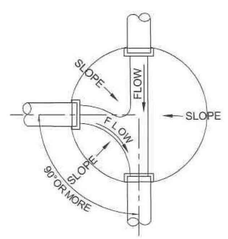

NOTES

1. MANHOLE LIDS SHALL BE SEALED WITH AN APPROVED RUBBER GASKET.
2. ALL JOINTS SHALL BE SEALED WITH JOINT COMPOUND OR MORTAR INSIDE AND OUT.
3. UNUSED CHANNELS SHALL BE COMPLETELY FILLED WITH GROUT.
4. STUBS SHALL BE PLUGGED AND END MARKED ABOVE FINISHED GRADE WITH A REDWOOD 4 BY 4 POST PAINTED GREEN.
5. IF AN ECCENTRIC CONE IS USED, PLACE SUCH THAT THE OPENING IS OVER THE UPSTREAM INVERT.
6. FLOW LINES SHALL HAVE A 1/10 DROP OR AS INDICATED ON PLANS.
7. MANHOLES WITH DROPS SHALL BE EPOXY COATED PER THE SANITARY SEWER SYSTEM STANDARDS.

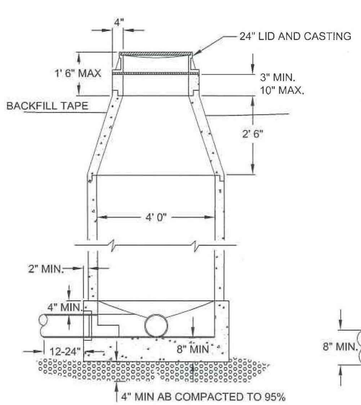

48" MANHOLE

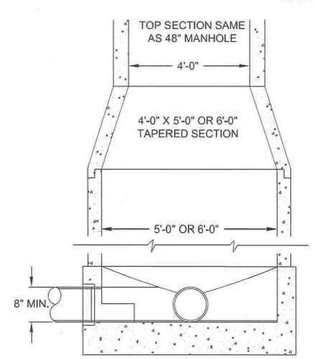

60" OR 72" MANHOLE

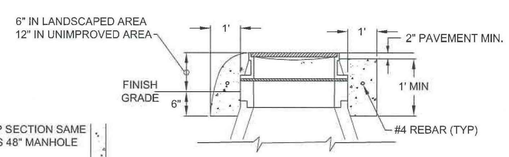

CONCRETE COLLAR DETAIL

PUBLIC WORKS DEPARTMENT
ENGINEERING DIVISION

STANDARD SEWER MANHOLE

APPROVED BY:

PUBLIC WORKS DIRECTOR / CITY ENGINEER

SCALE:	DRAWN BY:	DATE:	
NONE	BPJ	MAR 3, 2009	SS - 1

H:\STANDARDS\Standard Details\4_Sewer\SS - 1.dwg

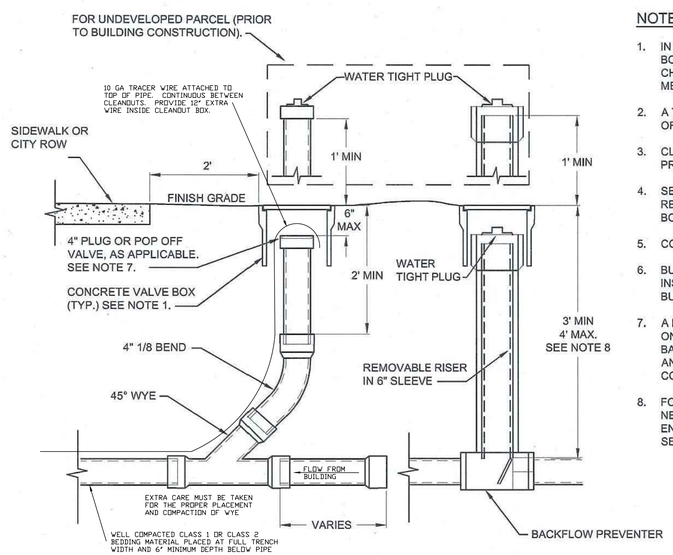

NOTES:

1. IN NON-TRAFFIC AREAS INSTALL A ROUND CONCRETE VALVE BOX & COVER MARKED "SEWER". IN TRAFFIC AREAS INSTALL A CHRISTY G5 BOX (OR APPROVED EQUAL) WITH A TRAFFIC RATED METAL LID MARKED "SEWER".
2. A THREE FOOT CAPPED STUB SHALL BE INSTALLED UPSTREAM OF THE BACKFLOW PREVENTER ON UNDEVELOPED PARCELS.
3. CLEANOUT BOX TO BE FREE OF ALL DIRT AND READY AT TIME OF PRE-FINAL INSPECTION.
4. SERVICES OVER 100' LONG AND COMMERCIAL SERVICES REQUIRE A MIN. 6" CLEANOUT WITH 6" FITTINGS. THE CLEANOUT BOX SHALL BE CONSTRUCTED PER THE DESIGN STANDARDS.
5. CONNECTION TO MAIN SHALL BE WITH A FACTORY WYE.
6. BUILDING CONTRACTOR SHALL SET BOX TO FINISH GRADE AND INSTALL AN ABS PLUG SET 6" BELOW THE SURFACE PRIOR TO BUILDING PRE-FINAL.
7. A POP OFF RELIEF VALVE SHALL BE INSTALLED IN THE CAP OF ONE CLEANOUT LOCATED ON THE STREET SIDE OF THE BACKFLOW PREVENTER. THE CLEANOUT SHALL BE LOCATED IN AN AREA LEAST LIKELY TO CAUSE DAMAGE TO PROPERTY OR CONTAMINATION OF SURROUNDING AREA IF ACTIVATED.
8. FOR EXISTING SERVICES, SEWER LINE DEPTH SHALL BE AS NEEDED TO MATCH EXISTING PIPE INVERT ELEVATION. CITY ENGINEER MAY INCLUDE SPECIAL REQUIREMENTS FOR SHALLOW SERVICES IN THE CITY RIGHT OF WAY.

PUBLIC WORKS DEPARTMENT
ENGINEERING DIVISION

SEWER SERVICE CLEANOUT

APPROVED BY:

PUBLIC WORKS DIRECTOR / CITY ENGINEER

SCALE:	DRAWN BY:	DATE:	
NONE	BPJ	FEB 9, 2010	SS - 4

H:\STANDARDS\Standard Details\4_Sewer\SS - 4.dwg

NO.	REVISIONS	DATE

DESIGNED: BKM
DRAWN: BKM
PROJ. NO:
DWG:commercial street design1
DATE: Feb. 2020

COMMERCIAL STREET - PHASE 1

WATER, SEWER AND STORM DRAIN TRENCH AND SEWER DETAILS

NEVADA CITY CALIFORNIA

CITY OF NEVADA CITY
317 BROAD STREET
NEVADA CITY, CALIFORNIA 95959
(530) 265-2496

C4

© SIERRA LAND SOLUTIONS, INC. 2020

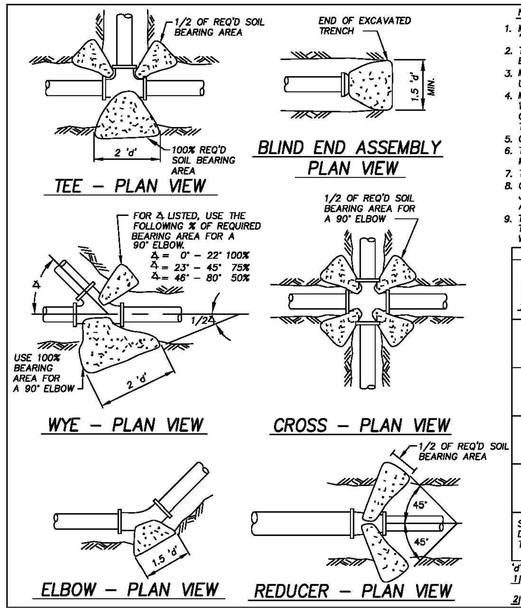

NOTES:

1. MATERIALS AND INSTALLATION SHALL CONFORM TO REACTION BLOCKING FOR "WATERMAINS" IN THE SPECIFICATIONS.
2. THRUST BLOCKS SHALL BE PLACED AT ALL HORIZONTAL DEFLECTIONS IN EXCESS OF 6° AND ALL DOWNWARD VERTICAL DEFLECTIONS IN EXCESS OF 6'.
3. MAXIMUM ESTIMATED SOIL BEARING CAPACITY SHALL NOT EXCEED 2,000 P.S.F. UNLESS OTHERWISE APPROVED BY DISTRICT ENGINEER.
4. MINIMUM SOIL BEARING AREAS ARE BASED ON A WORKING PRESSURE 150 P.S.I. WITH A 1.5 SAFETY FACTOR PLUS 75 P.S.I. SURGE (TOTAL 300 P.S.I.) CALCULATION FOR BEARING AREAS FOR WORKING PRESSURE HIGHER THAN 150 P.S.I. MUST BE APPROVED BY THE DISTRICT ENGINEER.
5. CONCRETE SHALL BE PLACED BETWEEN THE FITTING AND UNDISTURBED SOIL.
6. THRUST BLOCKS SHALL BE NEATLY FORMED USING PLYWOOD OR SANDBAGS. FORMING MATERIALS SHALL BE REMOVED UPON INITIAL CURE OF CONCRETE & PRIOR TO BACKFILLING.
7. THRUST BLOCKS SHALL BE CONSTRUCTED OF 2,000 PSI CONCRETE.
8. CONCRETE SHALL NOT BE PLACED ON OR AROUND PIPE, BELLS, FLANGES OR OTHER JOINTS. IF UNAVOIDABLE, AND WITH APPROVAL OF THE DISTRICT ENGINEER, THESE AREAS SHALL BE PROTECTED WITH A DOUBLE WRAP OF 6 MIL POLYETHYLENE FILM.
9. THRUST BLOCKS PLACED ON BLIND FLANGES ADJACENT TO OTHER THRUST BLOCKS ON THE SAME FITTING SHALL BE SEPARATED FROM THE PERMANENT THRUST BLOCKS WITH A PLYWOOD DIVIDER IN ORDER TO FACILITATE ITS REMOVAL.

THRUST BLOCK SCHEDULE

PIPE SIZE 1/ 2/	MAX. SOIL BEARING CAPACITY (1,000 P.S.F.) SEE NOTE 3	REQUIRED SOIL BEARING (SQ. FT.) – SEE NOTE #4. BLIND END OR TEE	ELBOW 90°–46°	ELBOW 45°–23°	ELBOW 22 1/2°–12°	ELBOW 11 1/4°–6°	REDUCER OR CROSS
4" & 6"	10	2	2	1	1	1	2
	4	3	3	2	1	1	3
	2	5	6	4	2	1	6
	1	9	12	8	4	2	12
8"	10	2	3	2	1	1	3
	4	4	6	3	2	1	9
	2	8	11	6	3	2	11
	1	16	22	12	6	3	22
10"	10	3	4	2	2	1	4
	4	6	9	5	3	2	9
	2	12	17	10	5	3	17
	1	24	34	20	10	5	34
12"	10	4	5	3	2	1	5
	4	9	12	7	3	2	12
	2	17	24	13	7	4	24
	1	34	48	26	14	7	48

SOIL DESCRIPTION		
	10	HARD, SOUND SHALE
	4	SAND & GRAVEL CEMENTED WITH CLAY–HARD TO PICK
	2	SANDY MEDIUM CLAY – CAN BE SPADED
	1	SOFT CLAY

'd' = DEPTH OF SOIL BEARING SURFACE
1/ REQUIRED SOIL BEARING AREA FOR SIZES LARGER THAN 12" MUST BE APPROVED BY DISTRICT ENGINEER OR SHALL BE AS SHOWN ON THE PLANS.
2/ FOR 2" PIPE SIZE, USE 25% OF THE TABLE VALUE FOR 4".

BOARD REVIEW: 3–10–10 SD NUMBER REVISED 6–27–14

THRUST BLOCKS NOT TO SCALE NID SD2

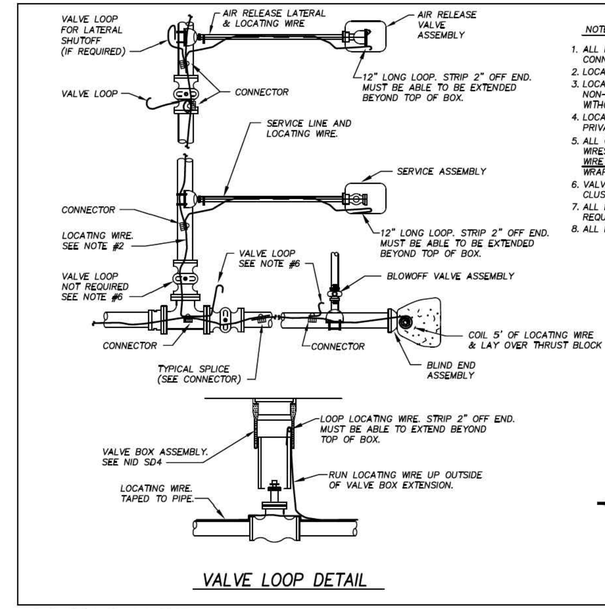

NOTES:

1. ALL MATERIALS AND INSTALLATION SHALL CONFORM TO LOCATING WIRE AND CONNECTORS FOR "WATER MAINS" IN THE SPECIFICATIONS.
2. LOCATING WIRE SHALL BE COATED 10 GAUGE SOLID COPPER.
3. LOCATING WIRE SHALL BE PLACED ABOVE AND CENTERED OVER ALL NON–METALLIC PIPE AND OVER ALL METALLIC PIPE USING 'O' RING JOINTS WITHOUT BONDING STRAPS.
4. LOCATING WIRE SHALL BE PLACED OVER ALL SERVICE LINES INCLUDING PRIVATE FIRE SERVICE LATERALS AND AIR RELEASE VALVE LATERALS.
5. ALL CONNECTORS FOR SPLICES AND OTHER CONNECTIONS TO THE LOCATING WIRES SHALL BE MADE WITH SPLIT BOLT OR PARALLEL CONNECTORS – (NO WIRE NUTS). ALL SPLICES AND CONNECTIONS AND THE CONNECTOR SHALL BE WRAPPED THOROUGHLY WITH VINYL ELECTRICAL TAPE.
6. VALVE LOOPS ARE REQUIRED FOR ONLY ONE VALVE IN A CLUSTER OF VALVES PROVIDING THEY ARE ALL WITHIN A 2' RADIUS.
7. ALL BLOWOFF VALVES AND AIR RELEASE LATERAL SHUTOFF VALVES (IF REQUIRED) SHALL BE INSTALLED WITH A LOCATING WIRE VALVE LOOP.
8. ALL LOCATING WIRE SHALL BE TESTED FOR CONTINUITY.

BOARD REVIEW: 3–10–10 REVISED: 10–30–12 G.K. SD NUMBER REVISED 6–27–14

LOCATING WIRE NOT TO SCALE NID SD3

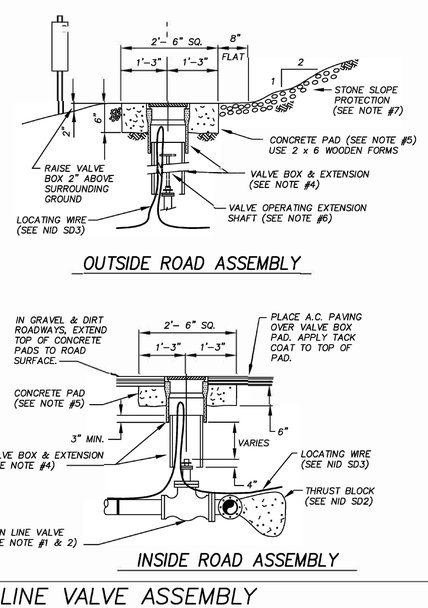

NOTES:

1. ALL MATERIALS AND INSTALLATIONS SHALL CONFORM TO "MAINLINE VALVES" IN THE SPECIFICATIONS.
2. VALVES SHALL BE OF THE TYPE ALLOWED IN THE SPECIFICATIONS.
3. JOINTS MAY BE FLANGED, MECHANICAL OR 'O' RING PUSH ON JOINTS EXCEPT WHERE SPECIFIC TYPES OF JOINTS ARE SHOWN ON THE PLANS OR DESIGNATED IN THE SPECIFICATIONS. ALL JOINTS SHALL BE PROTECTED FROM CORROSION AS REQUIRED IN THE SPECIFICATIONS.
4. VALVE BOXES SHALL BE CHRISTY G5 WITH A RATTLEPROOF CAST IRON LID MARKED "WATER". BOX EXTENSIONS SHALL BE PRECAST CONCRETE OR 8" SMOOTH WALL P.V.C. PIPE WITH MIN. SDR OF 35 AND ENDS CUT SQUARE. BOX EXTENSIONS SHALL BE CENTERED OVER THE VALVE OPERATING NUT AND CONCENTRIC WITH THE VALVE STEM.
5. VALVE BOX PADS SHALL BE 3,000 P.S.I. CONCRETE.
6. A VALVE OPERATOR EXTENSION SHAFT SHALL BE FURNISHED AND INSTALLED FOR ALL VALVES WITH OPERATING NUTS PLACED 36" OR MORE BELOW THE TOP OF THE VALVE BOX. REFER TO NID SD9.
7. PLACE STONE SLOPE PROTECTION OF NO. 3 BACKING ROCK PER CALTRANS SEC. 72, ON ALL CUT SLOPES SURROUNDING VALVE ASSEMBLIES AS DIRECTED.

BOARD REVIEW: 3–10–10 SD NUMBER REVISED 6–27–14

MAINLINE VALVE ASSEMBLY NOT TO SCALE NID SD4

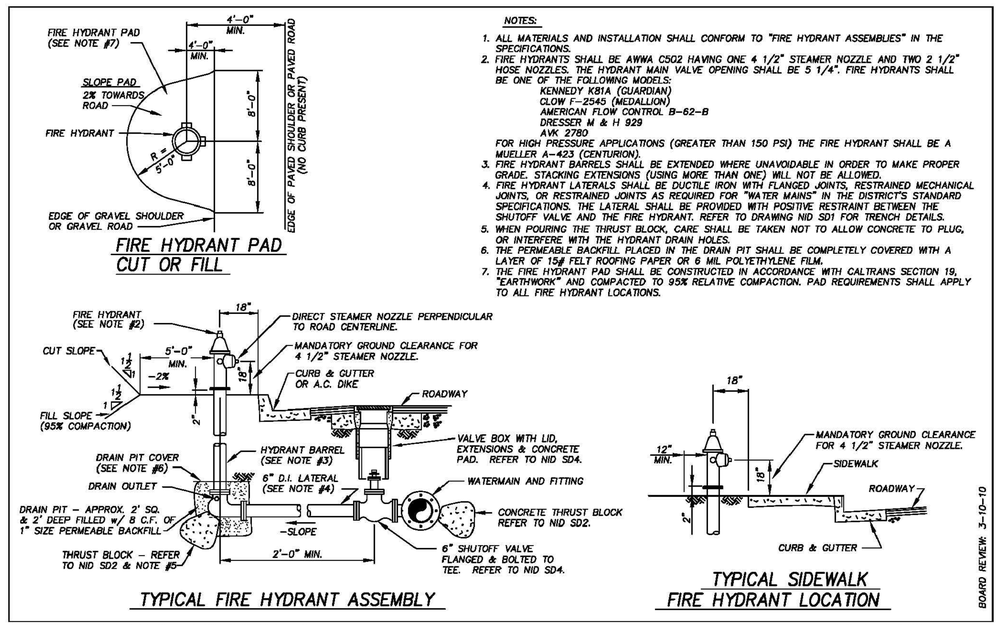

NOTES:

1. ALL MATERIALS AND INSTALLATION SHALL CONFORM TO "FIRE HYDRANT ASSEMBLIES" IN THE SPECIFICATIONS.
2. FIRE HYDRANTS SHALL BE AWWA C502 HAVING ONE 4 1/2" STEAMER NOZZLE AND TWO 2 1/2" HOSE NOZZLES. THE HYDRANT MAIN VALVE OPENING SHALL BE 5 1/4". FIRE HYDRANTS SHALL BE ONE OF THE FOLLOWING MODELS:
   KENNEDY K81A (GUARDIAN)
   CLOW F–2545 (MEDALLION)
   AMERICAN FLOW CONTROL B–62–B
   DRESSER M & H 929
   AVK 2780
   FOR HIGH PRESSURE APPLICATIONS (GREATER THAN 150 PSI) THE FIRE HYDRANT SHALL BE A MUELLER A–423 (CENTURION).
3. FIRE HYDRANT BARRELS SHALL BE EXTENDED WHERE UNAVOIDABLE IN ORDER TO MAKE PROPER GRADE. STACKING EXTENSIONS (USING MORE THAN ONE) WILL NOT BE ALLOWED.
4. FIRE HYDRANT LATERALS SHALL BE DUCTILE IRON WITH FLANGED JOINTS, RESTRAINED MECHANICAL JOINTS, OR RESTRAINED JOINTS AS REQUIRED FOR "WATER MAINS" IN THE DISTRICT'S STANDARD SPECIFICATIONS. THE LATERAL SHALL BE PROVIDED WITH POSITIVE RESTRAINT BETWEEN THE SHUTOFF VALVE AND THE FIRE HYDRANT. REFER TO DRAWING NID SD1 FOR TRENCH DETAILS.
5. WHEN POURING THE THRUST BLOCK, CARE SHALL BE TAKEN NOT TO ALLOW CONCRETE TO PLUG, OR INTERFERE WITH THE HYDRANT DRAIN HOLES.
6. THE PERMEABLE BACKFILL PLACED IN THE DRAIN PIT SHALL BE COMPLETELY COVERED WITH A LAYER OF 15# FELT ROOFING PAPER OR 6 MIL POLYETHYLENE FILM.
7. THE FIRE HYDRANT PAD SHALL BE CONSTRUCTED IN ACCORDANCE WITH CALTRANS SECTION 19, "EARTHWORK" AND COMPACTED TO 95% RELATIVE COMPACTION. PAD REQUIREMENTS SHALL APPLY TO ALL FIRE HYDRANT LOCATIONS.

BOARD REVIEW: 3–10–10

FIRE HYDRANT ASSEMBLY NOT TO SCALE NID SD8

REGISTERED PROFESSIONAL ENGINEER BRYAN K. McALISTER C 058570 December 31, 2020 CIVIL STATE OF CALIFORNIA

DATE SIGNED: 02–07–20

NO.	REVISIONS	DATE

DESIGNED: BKM
DRAWN: BKM
PROJ. NO:
DWG:commercial street design1
DATE: Feb. 2020

COMMERCIAL STREET - PHASE 1
WATER, SEWER AND STORM DRAIN
WATER DETAILS

NEVADA CITY CALIFORNIA

CITY OF NEVADA CITY
317 BROAD STREET
NEVADA CITY, CALIFORNIA 95959
(530) 265-2496

C5

© SIERRA LAND SOLUTIONS, INC. 2020

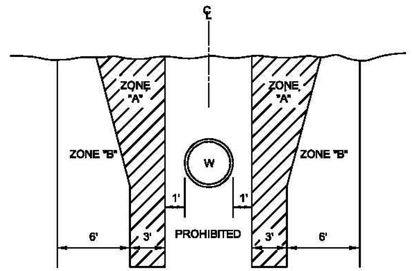

PARALLEL CONSTRUCTION

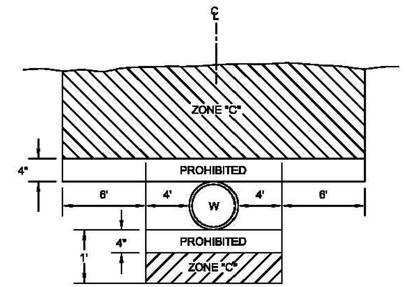

CROSSINGS

NOTES:

1. ZONE "A" SPECIAL PERMISSION (ALL ZONES REQUIRE REVIEW BY CITY ENGINEER).
2. ZONE "B" SPECIAL PIPE REQUIRED:
   - PVC SEWER PIPE WITH RUBBER RING JOINTS.
   - CAST OR DUCTILE IRON PIPE WITH COMPRESSION JOINTS.
   - IF THE SEWER PIPE DOES NOT MEET THE ABOVE REQUIREMENTS THE WATER LINE MUST BE CONSTRUCTED OF DUCTILE IRON PIPE WITH HOT DIP BITUMINOUS COATING OR CLASS 200 PVC PIPE.
3. ZONE "C" SPECIAL PIPE, NO JOINTS.
   - A CONTINUOUS SECTION OF DUCTILE IRON PIPE WITH HOT DIP BITUMINOUS COATING.
   - A CONTINUOUS SECTION OF CLASS 200 PVC PIPE.
   - ANY SEWER PIPE WITHIN A CONTINUOUS SLEEVE.
   - IF THE SEWER PIPE DOES NOT MEET THE ABOVE REQUIREMENTS THE WATER LINE MUST BE CONSTRUCTED OF A CONTINUOUS SECTION (NO JOINTS), DUCTILE IRON PIPE WITH HOT DIP BITUMINOUS COATING OR CLASS 200 PVC PIPE.
4. MINIMUM CLEARANCES ARE REQUIRED WHENEVER POSSIBLE. REDUCED SEPERATION WITHIN THE ZONES SHOWN ARE SUBJECT TO REVIEW AND APPROVAL.

G:\DATA\ENG\STANDARDS\Updates\02-2012\SS - 5.dwg

CITY OF GRASS VALLEY NEVADA CO., CALIF.	PUBLIC WORKS DEPARTMENT ENGINEERING DIVISION		
	SEWER AND WATER SEPARATION DETAILS		
APPROVED BY:	PUBLIC WORKS DIRECTOR / CITY ENGINEER		
SCALE: NONE	DRAWN BY: CDH	DATE: FEB 28, 2012	SS - 5

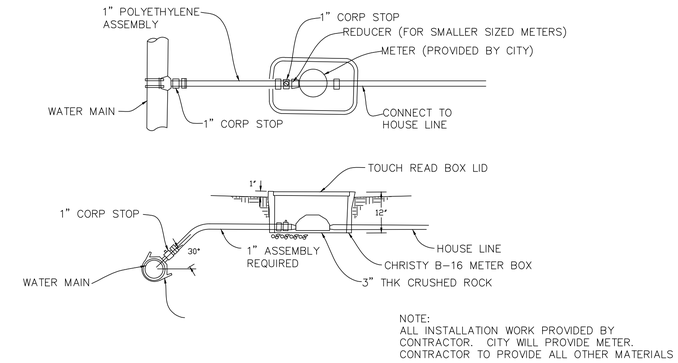

NOTE:
ALL INSTALLATION WORK PROVIDED BY CONTRACTOR. CITY WILL PROVIDE METER. CONTRACTOR TO PROVIDE ALL OTHER MATERIALS

1 WATER SERVICE DETAIL (FOR 1" OR SMALLER METER)

NTS

Oldcastle Infrastructure
A CRH COMPANY

DURALITE™
1730

OPTIONS

Available Covers: • Polymer Concrete, Flush Solid

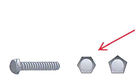

Fasteners:
- Hex Head Coil Thread Bolt
- Penta Head Coil Thread Bolt

Detail: Bolt Down

Oldcastle Infrastructure
A CRH COMPANY

DURALITE™
1730

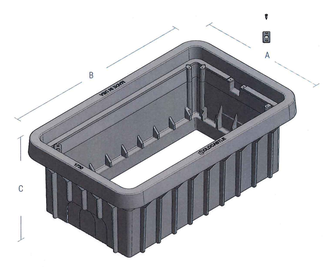

MATERIAL & STYLE

Polyolefin Blend
Straight Wall

1730-12

ANSI/SCTE-77, Tier 15
28.5 lbs

ANSI/SCTE-77, Tier 22
31.3 lbs

1730-18

ANSI/SCTE-77, Tier 15
36.2 lbs

ANSI/SCTE-77, Tier 22
41.3 lbs

1730-24

ANSI/SCTE-77, Tier 15
Available Soon

ANSI/SCTE-77, Tier 22
Available Soon

	A	B	C
1730-12	20 1/2	33 1/2	12
1730-18	20 1/2	33 1/2	18
1730-24	Available soon		

MEDIUM DUTY
ANSI/SCTE TIER 15

HEAVY DUTY
ANSI/SCTE TIER 22

For use in non-vehicular traffic situations only. Weights and dimensions may vary slightly. Actual load rating is determined by the box and cover combination.

Cover comes standard with permanent markings for manufacturer, load rating, model size and manufacturing location.
*Based upon lid and body combination, this unit can be Tier 15 or Tier 22. T22 rating when paired with T22 polymer concrete lid.

Revision 02/03/19

© 2019 Oldcastle Infrastructure, Inc

oldcastleinfrastructure.com
(800) 735-5566

Solving Today. Transforming Tomorrow.

REGISTERED PROFESSIONAL ENGINEER
BRIAN K. McALISTER
C 058570
December 31, 2020
CIVIL
STATE OF CALIFORNIA

DATE SIGNED: 02-07-20

NO.	REVISIONS	DATE

DESIGNED: BKM
DRAWN: BKM
PROJ. NO:
DWG:commercial street design1
DATE: Feb. 2020

COMMERCIAL STREET - PHASE 1
WATER, SEWER AND STORM DRAIN
WATER AND UTILITY DETAILS
NEVADA CITY CALIFORNIA

CITY OF NEVADA CITY
317 BROAD STREET
NEVADA CITY, CALIFORNIA 95959
(530) 265-2496

C6

© SIERRA LAND SOLUTIONS, INC. 2020

TYPE G0 CURB INLET

FOR 6" CURB
CALTRANS G0 DRAINAGE INLET

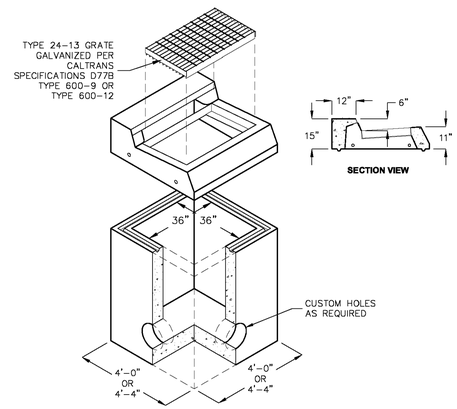

NOTES:
- FOR BOX HEIGHT 8'-3" OR LESS WALL THICKNESS IS 6"
- FOR HEIGHTS GREATER THAN 8'-3" WALL THICKNESS IS 8"
- MANHOLE STEPS ARE REQUIRED FOR BOXES OF 30" DEPTH OR GREATER.
- 8" BASE THICKNESS

DESIGN LOAD: H-20 TRAFFIC

FOR COMPLETE DESIGN AND PRODUCT INFORMATION
CONTACT JENSEN PRECAST.

3/12/07
D:\M.M._20 6_8.dwg
© 2007 Jensen Precast

JENSEN PRECAST

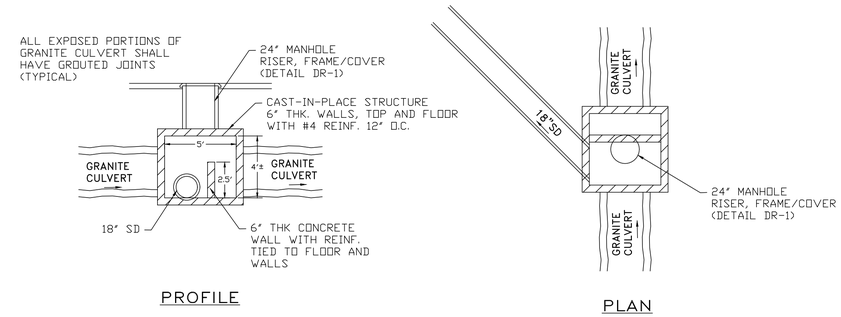

1 STORM DRAIN JUNCTION STRUCTURE

NTS

REGISTERED PROFESSIONAL ENGINEER
BRYAN K. McALISTER
C 058570
December 31, 2020
CIVIL
STATE OF CALIFORNIA

DATE SIGNED: 02-07-20

TABLE OF DIMENSIONS

A	B	T MIN.
48"	18"	6"
60"	30"	8"
72"	42"	8"
84"	54"	12"
96"	12" (FLAT)	12"

DIMENSION "B" IS A MINIMUM DIMENSION AND MAY BE GREATER IF DEPTH PERMITS. RISER SECTIONS. CONES, AND ADJUSTING RINGS SHALL CONFORM TO ASTM DESIGNATION C-478

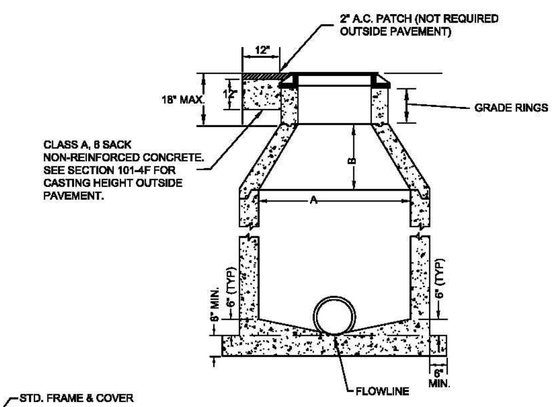

NOTES

1. ECCENTRIC CONES SHALL BE USED WHERE SPECIFIED ON THE PLANS.
2. JOINT MAY BE EITHER KEYED OR TONGUE AND GROOVE.
3. SEE SECTION 6-10 FOR JOINT COMPOUND. (ALL MANHOLE JOINTS)
4. TOP OF FRAME SHALL BE 1/8 INCH BELOW ADJACENT PAVEMENT
5. 0.20 FOOT MINIMUM FALL THROUGH MANHOLE.
6. O.D. OF PIPE SHALL NOT EXCEED I.D. OF ITS MANHOLE BARREL
7. IRON TO BE SET 1/4 INCH BELOW FINISHED GRADE

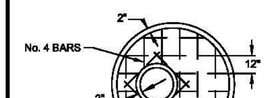

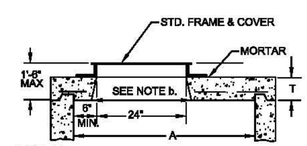

NOTES

1. A FLAT TOP SLAB SHALL BE USED WHEN A SHALLOW LINE DOES NOT PERMIT USE OF A TAPERED DOME.
2. IF THE BOTTOM, INSIDE DIAMETER OF THE FLAT TOP OPENING IS 28 INCHES OR MORE, THE THICKNESS OF THE SLAB MAY BE DISREGARDED IN COMPUTING THE MAXIMUM 18 INCH HEIGHT OF THE OPENING.

FLAT TOP SLAB

CITY OF GRASS VALLEY
NEVADA CO., CALIF.

PUBLIC WORKS DEPARTMENT
ENGINEERING DIVISION

STANDARD PRECAST DRAINAGE MANHOLE

APPROVED BY:

PUBLIC WORKS DIRECTOR / CITY ENGINEER

SCALE:	DRAWN BY:	DATE:	
NONE	TMT	FEB 25, 2014	DR - 1

H:\STANDARDS\Standard Details\5_Drainage\DR - 1.dwg

NO.	REVISIONS	DATE

DESIGNED: BKM
DRAWN: BKM
PROJ. NO:
DWG:commercial street design1
DATE: Feb. 2020

COMMERCIAL STREET - PHASE 1
WATER, SEWER AND STORM DRAIN
STORM DRAIN DETAILS

NEVADA CITY CALIFORNIA

CITY OF NEVADA CITY
317 BROAD STREET
NEVADA CITY, CALIFORNIA 95959
(530) 265-2496

C7

© SIERRA LAND SOLUTIONS, INC. 2020

REPORT TO CITY COUNCIL

City of Nevada City
317 Broad Street
Nevada City CA 95959
www.nevadacityca.gov

March 11, 2020

TITLE: City of Nevada City 3rd Quarter Sales Tax Update

RECOMMENDATION: Receive and file.

CONTACT: Catrina Olson, City Manager

BACKGROUND / DISCUSSION:
Quarterly City staff meet with HdL, the City's sales tax consultant, for updates on City sales tax performance. HdL provides an updated report each quarter to be made available to the public.

The attached report is for 3rd quarter 2019 and covers 4th quarter gross receipts for 3rd quarter sales (July 2019 – September 2019).

ENVIRONMENTAL CONSIDERATIONS: Not applicable.

FISCAL IMPACT: Not applicable.

ATTACHMENTS:
- ✓ HdL 3rd Quarter Sales Tax Update

Q3 2019

City of Nevada City Sales Tax *Update*

Fourth Quarter Receipts for Third Quarter Sales (July - September 2019)

Nevada City In Brief

Nevada City's receipts from July through September were 18.9% above the third sales period in 2018. Excluding reporting aberrations, actual sales were up 24.4%.

A specialized product supplier's relocation into the City last year accounted for the vast majority of the business-industry gain for the quarter. Similarly, a new successful merchant was established recently; food-drugs tax base rose 120% when measured against prior-period revenues.

Year-ago countywide pool allocations were suppressed due to a negative correction for previous overpayments; in addition, new out of state taxpayers subject to the Wayfair decision' combined to explain the 33% growth in this category.

Summer spending dipped in general consumer goods and restaurants.

Voter-approved Measures C and S generated $147,973 and $180,675, respectively; amounts represented are inclusive of adjustments for payment timing and other irregularities.

Net of aberrations, taxable sales for all of Nevada County grew 5.7% over the comparable time period; the Far North region was up 5.8%.

Sales Tax by Major Business Group

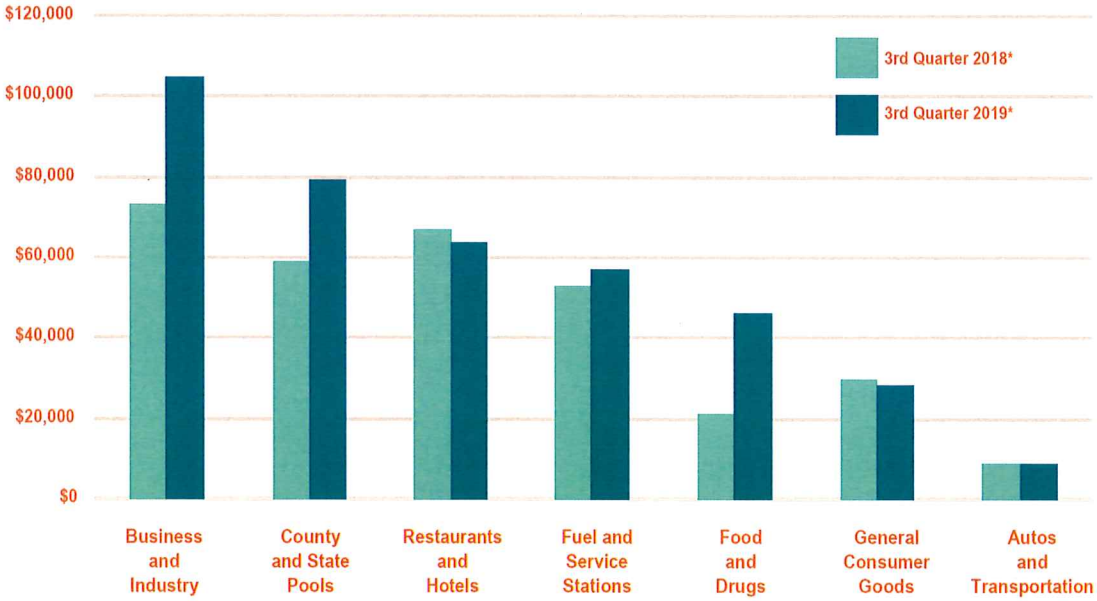

*Allocation aberrations have been adjusted to reflect sales activity

Top 25 Producers
In Alphabetical Order

- Bonanza Market
- California Organics
- Chevron
- Crazy Horse Saloon & Grill
- Electrical Design Technology
- Elevation 2477
- Friar Tucks Restaurant & Bar
- Gyro Stabilized Systems
- J H Petroleum
- Lefty's Grill
- New Moon Cafe
- Northridge Inn
- Plaza Tire & Auto Service
- Port of Subs Express Mart & Gas Station
- Riebes Auto Parts
- Robinson Enterprises
- Robinson Petroleum
- Sopa Thai Cuisine
- South Pine Cafe
- SPD Market
- SPD Saw Shop
- Telestream
- Three Forks Bakery & Brewing Company
- Tour of Nevada City Bicycle Shop
- Vital Garden Supply

Revenue Comparison
One Quarter – Fiscal Year To Date (Q3)

	2018-19	2019-20
Point-of-Sale	$290,750	$316,495
County Pool	43,993	81,509
State Pool	151	136
Gross Receipts	**$334,894**	**$398,140**
Measure S	$219,065	$195,246
Measure C	$163,618	$145,900

Published by HdL Companies in Winter 2020
www.hdlcompanies.com | 888.861.0220 HdL

NOTES

Statewide Results

The local one-cent share of statewide sales and use tax from sales occurring July through September was 2.2% higher than the summer quarter of 2018 after adjusting for accounting anomalies.

The bulk of the increase came from the countywide use tax allocation pools and is due to the acceleration in online shopping where a large volume of the orders are shipped from out-of-state.

Online shopping also produced gains in the business-industrial group with in-state industrial zoned logistics centers filling orders previously taken by brick and mortar retailers. Purchases to support healthcare, food processing, logistics/warehouse operations and information/data technology also helped offset declines in other business-related categories.

With the exception of some discount and value-oriented retail, most categories of general consumer goods were down. New cannabis related start-ups offset declines in the food and drug group while a softening in building-construction receipts was consistent with recent declines in the volume and value of new building permit issuances.

Overall growth in restaurant receipts continued to soften with a shift toward lower cost dining establishments and takeout meal options. Reports of labor shortages and the impact of homelessness on customer traffic in metropolitan areas were reportedly factors in the decline in tax revenues from higher price, fine dining establishments.

Despite a slight uptick in used auto and auto lease receipts, the auto related group was significantly down due to a drop in new car and RV sales. Previously propped up by a 23% subprime rated customer base and six- and seven-year financing, loan delinquencies have recently surged back to levels last seen in 2009.

Additional Tax Districts Approved

Voters approved eight of the nine sales tax measures on the November 2019 ballot adding six new districts and extending two others.

This brings the total number of local transactions and use tax districts (TUT's) to 325 with 62 that are levied countywide and 263 imposed by individual cities. The number of local districts have close to tripled over the last decade as agencies deal with rising costs and service needs. TUT's have been a favorable option as visitors contribute to the tax and a collection system is already in place that minimizes administrative and monitoring costs.

California's basic rule is that the rate for all local TUT's combined, shall not exceed 2.0% or a total of 9.25% including the state levy. However, the state legislature has authorized higher caps in some jurisdictions with the highest voter-approved, combined state/local rate now at 10.5%.

Thirty-five or more additional local TUT measures are currently being considered for the March 2020 ballot.

Sales Per Capita*

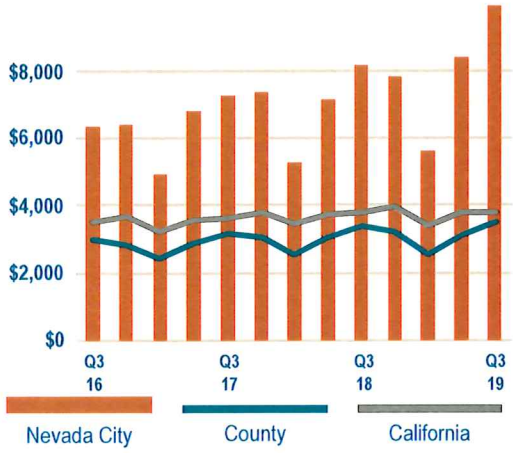

*Allocation aberrations have been adjusted to reflect sales activity

Revenue By Business Group

Nevada City This Quarter*

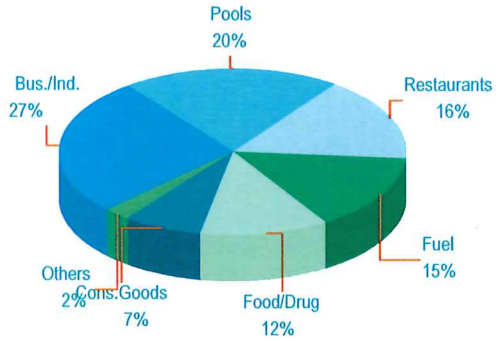

*Allocation aberrations have been adjusted to reflect sales activity

Nevada City Top 15 Business Types**

Business Type	Nevada City Q3 '19	Nevada City Change	County Change	HdL State Change
Art/Gift/Novelty Stores	3,433	-4.7%	0.5%	1.5%
Auto Repair Shops	5,100	7.4%	1.4%	0.9%
Automotive Supply Stores	— CONFIDENTIAL —		4.0%	3.7%
Cannabis Related	— CONFIDENTIAL —		445.0%	38.2%
Casual Dining	60,619	-4.3%	2.1%	2.3%
Convenience Stores/Liquor	— CONFIDENTIAL —		0.3%	1.0%
Electrical Equipment	— CONFIDENTIAL —		59.1%	1.5%
Family Apparel	3,321	29.5%	-4.1%	1.5%
Garden/Agricultural Supplies	— CONFIDENTIAL —		-0.9%	4.3%
Grocery Stores	— CONFIDENTIAL —		3.9%	1.7%
Motion Pictures/Equipment	— CONFIDENTIAL —		-54.5%	-20.8%
Petroleum Prod/Equipment	— CONFIDENTIAL —		41.8%	-3.5%
Service Stations	— CONFIDENTIAL —		2.9%	-1.5%
Specialty Stores	7,629	-12.9%	-8.3%	0.3%
Sporting Goods/Bike Stores	— CONFIDENTIAL —		-14.7%	-1.3%
Total All Accounts	**310,399**	**22.2%**	**3.3%**	**0.2%**
County & State Pool Allocation	**79,171**	**33.6%**	**15.9%**	**14.9%**
Gross Receipts	**389,570**	**24.4%**	**5.7%**	**2.3%**

** *Accounting aberrations such as late payments, fund transfers, and audit adjustments have been adjusted to reflect the quarter in which the sales occurred.*

REPORT TO CITY COUNCIL

City of Nevada City
317 Broad Street
Nevada City CA 95959
www.nevadacityca.gov

March 11, 2020

TITLE: Proposed Nevada City Fire Preparedness Flyer

RECOMMENDATION: Review proposed draft flyer and approve for printing and mailing.

CONTACT: Catrina Olson, City Manager

BACKGROUND / DISCUSSION:
Vice Mayor Minett has been working with the three Nevada City Firewise communities on community education on fire preparedness, vegetation management awareness and development of a Fire Safe Advisory Committee.

As part of community education Vice Mayor Minett has requested that the City develop an educational fire preparedness flyer for mailing to all residents of Nevada City. Vice Mayor Minett has shared the information regarding the flyer with Fire Chief Buttron, Fire Division Chief Goodspeed, Police Chief Ellis and members of the Firewise community committees. As the City moves into fire season, all are in support of sending a flyer to members of our community to provide fire preparedness reminders and information about community events that support vegetation clean-up.

The attached proposed mailer is a sample draft that will be circulated to Chief Buttron, Division Chief Goodspeed, Chief Ellis and the Firewise groups for their input. There could be modifications to the flyer before final printing.

Vice Mayor Minett is looking for approval to work with City staff and community members listed above to prepare, print and send the mailer within the first two weeks of April 2020.

ENVIRONMENTAL CONSIDERATIONS: Not applicable.

FISCAL IMPACT: The mailer will cost approximately $1,000 to print and mail.

ATTACHMENTS:
- ✓ Proposed Nevada City Fire Preparedness Flyer

Hi-Lo Sirens

EVACUATE, EVACUATE IMMEDIATELY!

Hi-lo sirens have been installed in all Nevada City, Grass Valley and Nevada County Sheriff's Office safety vehicles. When you hear the hi-lo siren sound DO NOT seek out information, DO NOT call 911…evacuate, evacuate immediately!

Emergency Supply "Go" Kit Checklist:

- ✓3 day supply of non-perishable food & 3 gallons of water per person
- ✓Map marked with @ least 2 evacuation routes
- ✓Prescriptions or special medications
- ✓Change of clothing
- ✓Extra eyeglasses or contacts
- ✓First aid kit
- ✓Flashlight/Headlamp
- ✓Battery-powered ratio & extra batteries
- ✓Sanitation supplies
- ✓Copies of important documents (birth certificates, passports etc)
- ✓Pet carrier, food, water and supplies

IF TIME ALLOWS:

- ✓Easily carried valuables
- ✓Photos/irreplaceable items
- ✓Computer/Laptop
- ✓Chargers extra batteries for cell phones, laptops, etc.

Sign up for CodeRED Emergency Alerts

SIGN UP FOR CODERED AT THE LINK LISTED: https://public.coderedweb.com/CNE/en-US/CA8B57E20D17

REGISTER FOR ALERTS & STAY INFORMED dial 211 or 1-844-319-4119 to learn about preparedness resources and enroll in the Code Red emergency alert system.

Increase your preparedness by sharing your plan with five trusted Emergency Allies and do the same for others. The more connected we are, the more likely we are to get accurate information in a timely manner and survive an emergency. You and your family may not be together during a fire, so consider communication strategies for your loved ones who spend time with others.

City of Nevada City
317 Broad Street
Nevada City, CA 95959

FIRE SAFETY TOWN HALL MEETING WITH VICE MAYOR MINETT
NEVADA CITY COUNCIL CHAMBERS 317 BROAD STREET
WEDNESDAY APRIL 29TH 2020 6PM – 8PM

The City will be hosting two green waste clean- up days with Waste Management
April 25, 2020 & October 24, 2020

Wildfire Risk Reduction
10 SAFETY TIPS

Action Items to Improve Your Home's Survivability:

- **REMOVE** leaves, pine needles, and other flammable material from the roof, gutters, and on and under the deck to help prevent embers from igniting your home.
- **SCREEN** areas below decks and porches with 1/8" wire mesh to help prevent material from accumulating underneath.
- **COVER** exterior attic and soffit vents with 1/8" wire mesh to help prevent sparks from entering your home.
- **ENCLOSE** eaves to help prevent ember entry.
- **INSPECT** shingles or roof tiles.
- **REPLACE** missing shingles or tiles.
- **COVER** ends of tiles with bird stops or cement to help prevent ember penetration during a wildfire.

Tips for Landscaping Around Your Home:

- **REMOVE** dead vegetation and other flammable materials, especially within the first 5 feet of the home.
- **KEEP** your lawn hydrated and maintained. If it is brown, cut it down to help reduce fire intensity.
- **PRUNE** tree limbs so the lowest branches are 6 to 10 feet above the ground to help reduce the chance of fire getting into the crowns of the trees.
- **MOVE** construction material, trash, and woodpiles at least 30 feet away from the home and other outbuildings.
- **DISPOSE** of branches, weeds, leaves, pine needles, and grass clippings that you have cut to reduce fuel for fire.

NEVADA CITY FREE RESIDENTIAL CHIPPING PROGRAM

Guidelines & applications available on the Nevada City website (link below)

https://www.nevadacityca.gov/newsview.aspx?nid=5934

REPORT TO CITY COUNCIL

City of Nevada City
317 Broad Street
Nevada City, CA 95959
www.nevadacityca.gov

March 11, 2020

TITLE: **34th Annual Spring Run Street Closure Request**

RECOMMENDATION: Review and authorize 34th Annual Spring Run street closure request per application.

CONTACT: Catrina Olson, City Manager

BACKGROUND / DISCUSSION:
On February 6, 2020, the City received an application for a street closure request for the 34th Annual Spring Run sponsored by the Nevada City United Methodist Church. The 5k and 10k run/walk event is planned for April 25, 2020 from 7:30 am to 11 am. The following street closure is proposed:

- Mill Street between Broad Street and Spring Street

A summary of the specific event characteristics and recommended staff conditions are included in the application packet along with a calendar of existing planned street closures.

ENVIRONMENTAL CONSIDERATIONS: Not applicable.

FISCAL IMPACT: Not applicable.

ATTACHMENTS:
- ✓ Street Closure/Special Event Application

CITY OF NEVADA CITY
PAID
FEB 06 2020
RCPT. AMT. 50.00
CK# 43046

February 6, 2020

To: The City of Nevada City
Attention: Special Event Application
Regarding: Street Closure Request

Date involved: April 25, 2020
Time involved: 7:30 am to 11:00 am
Street involved: Mill Street between Broad and Spring

The Nevada City United Methodist Church has produced the Spring Run on the last Saturday of April since 1986. On April 25, 2020 the Thirty -Fourth Annual Spring Run, a 5k and 10 K run/ walk, will be held. It is the third event of the year-long Gold Country Grand Prix featuring eleven races.

The run/walk course finishes in the middle of Mill Street adjacent to our church. It is necessary to block through-access for the safety of the participants and to have the scoring team and tables in position as well as to have the refreshment tables and award presentation positioned.

We have been grateful for the assistance of the City with street closure barricades in the past. Should any of the three residents along Mill Street have ingress or exit needs, they only need to request same and we can easily accommodate even during the event.

With the exception, some street marking with Dolomark (white rinsable chalk-like material), the area will be left in the same or better than the condition in which it was received.

Thank you,

PBoyer

Pearce Boyer
Race Director

CITY OF NEVADA CITY

SPECIAL EVENT APPLICATION / CONTRACT

EVENT NAME: The Thirty Fourth Annual Spring Run

EVENT INFORMATION. Please attach a detailed description of your event to this application (e.g. Overall summary, open to the public? How being publicized? Kid/family friendly? Rain or shine? Etc.)

Type of Event (Check all that apply)

___ Parade/Procession ___ Concert/Show/Public Dance
___ Street Festival/Block Party ___ Fundraiser
✓ Run/Walk/Bicycle ___ Other: _____

Has this event been produced before? (Yes) No
Is this an annual event? (Yes) No
Will there be an admission or entry fee? (Yes) No
If yes, fee per adult: $ 20 Fee per child: $ 5

Event Date(s) Saturday 4/25, 2020

Expected number of:
Attendees _____ Participants 100 Volunteers 15
Units and floats for parade: _____

Event Hours Start 8:30 A.M. End 10:30 A.M.

Set-up Date April 25 Time 7:30 A.M.

Break Down Date April 25 Time 11:00 A.M.

Names of street(s), sidewalk(s), alley(s) proposed to be closed (Attach additional pages or a map if necessary). Note that it may be necessary to consult with a Police Lieutenant (265-2626) and/or the Public Works Superintendent (265-2496) to accurately identify requested street closures.

Mill Street between Broad Street & Spring Street
_____ between _____ & _____

Additional Facilities Requested
Event organizers may be asked to complete a Facility Rental Contract with details about use of these additional facilities. Rental fees & cleaning deposits may apply.

___ Robinson Plaza ___ Calanan Park ___ Other: _____

Please note whether your event includes any of the following. If any apply, attach details.

___ Amplified sound ___ Concessions ___ Food Vendors
___ Stages/Platforms ___ Food Cooking ___ Alcohol sales
___ Tents/Temporary Structures ___ Animals will be present ___ Temporary Lighting

APPLICANT INFORMATION

Sponsoring Organization/Company Nevada City United Methodist Church

Name of Applicant/Responsible Party Mary Ann Boyer

Street Address 433 Broad Street Apt/Unit/Suite

City Nevada City State CA. Zip Code 95959

Email ncumc@nevadacitymethodist.com

Daytime Phone 530-265-2797 Cell Phone 530-263-5224

Does the sponsoring organization have experience producing similar events? Yes / No (Circle One)

Event Contact for Public Information

Name Nevada City United Methodist Church Contact Phone 530-265-2797

Email ncumc@nevadacitymethodist.com

Website www.nevadacitymethodist.com

Day of Event Contact Information

On-site Contact Name Mary Ann Boyer

On-site Contact Cell Number 530-263-5224

Day of Event ALTERNATE Contact Information

On-site Contact Name Pearce Boyer

On-site Contact Cell Number 530-263-5191

APPLICATION FEES

The City requires the payment of a non-refundable application fee upon submission of your completed application. Late fees apply to applications filed less than 90 days in advance of an event. The City does not guarantee any application submitted less than 45 days in advance will be able to be submitted to the City Council for consideration prior to the planned event. Please select from the following table the fee(s) that apply to your application:

_____ $100 Timely application for single new event OR old event with new sponsor
✓ $50 Timely application for repeat of event with same sponsor
_____ $25 For each additional application for new event by the same sponsor
_____ $10 For each additional application for repeat of event with same sponsor
_____ $75 Additional fee for applications filed less than 90 days in advance of an event
_____ $100 Rental Fee for Robinson Plaza or Calanan Park
_____ $100 Cleaning Deposit for use of Robinson Plaza or Calanan Park
_____ $500 Additional refundable security deposit, (if applicable), payable to the City of Nevada City, is to be paid to the cashier by cash, personal/business check, money order or cashier's check, for costs associated with city staff and/or extraordinary police services and/or costs of damages to public facilities that may be associated and reasonably foreseen with such event.

$ 50 **Total Fees**

APPLICANT AUTHORIZATION AND INDEMNITY

To the extent allowed by law, Applicant agrees to defend, indemnify, and hold harmless the City of Nevada City, its agents, officials, and employees from and against all claims, damages, losses, injuries, illness, accidents relating to, arising out of, or resulting from, the use of this Special Event Application and the information contained therein, and any resulting Contract.

Applicant acknowledges that the information provided in this Application is true and accurate to the best of Applicant's knowledge and belief.

I have read, understand and agree to comply with all the information provided in the Special Event Application (attached) and any resulting permits and Special Event Contract if approved by the City Council.

Mary Ann Boyer
Signature of Applicant/Responsible Party

February 6, 2020
Date

Addendum A – Requested Street Closure/Special Event Notification Form

PLEASE NOTE. You have received this notification because your property/business is located adjacent to a requested temporary street, sidewalk or alley closure that is subject to City Council approval at a future City Council meeting. Please monitor future City Council agendas for consideration of the following request.

STREET CLOSURE/SPECIAL EVENT INFORMATION

Type of Event (Check all that apply)

___ Parade/Procession
✓ Run/Walk/Bicycle
___ Street Festival/Block Party
___ Concert/Show/Public Dance
___ Fundraiser
___ Other: _____

Event Name/Description The Thirty Fourth Annual Spring Run is a 5k and 10k Run/Walk.

Event Date(s) April 25, 2020 **Expected Attendance** 100

Event Hours Start 8:30 A.M. End 10:30 A.M.

Set-up Date April 25 Time 7:30 A.M.

Break Down Date April 25 Time 11:00 A.M.

Names of street(s), sidewalk(s), alley(s) proposed to be closed:

Mill Street between Broad Street & Spring Street

_____ between _____ & _____

_____ between _____ & _____

_____ between _____ & _____

_____ between _____ & _____

Sponsoring Organization Nevada City United Methodist Church

Event Contact MaryAnn Boyer **Phone Number** 530-263-5224

Event Website www.nevadacitymethodist.com

Addendum B – Notification Certification

EVENT INFORMATION

Sponsoring Organization Nevada City United Methodist Church

Event Name The Thirty-Fourth Annual Spring Run

Event Date(s) April 25, 2020

Event Location Mill Street between Broad Street and Spring Street

Signature of Sponsor or Authorized Representative

I acknowledge I am responsible for providing notice of my requested event to all adjacent residents and businesses and certify that the entities listed below have been notified of the requested event.

Name (printed) Mary Ann Boyer

Signature Mary Ann Boyer

Name/Business	Address	Method of Notification
Two Room Inn	431 Broad St. Nevada City	☐ Email ☐ Hand Delivered ☑ Mail
Resident	107 A Mill St. Nevada City	☐ Email ☐ Hand Delivered ☑ Mail
Resident	107 B Mill St. Nevada City	☐ Email ☐ Hand Delivered ☑ Mail
Resident	111 Mill St. Nevada City	☐ Email ☐ Hand Delivered ☑ Mail
		☐ Email ☐ Hand Delivered ☐ Mail
		☐ Email ☐ Hand Delivered ☐ Mail
		☐ Email ☐ Hand Delivered ☐ Mail

[Attach additional pages as needed]

From: Bubba Highsmith
To: Tanya Horton; Paul Rohde; Sam Goodspeed
Subject: RE: 4/25/20 Annual Spring Run
Date: Thursday, February 20, 2020 11:34:37 AM

Public works has no issues

logo

Bubba Highsmith
City Of Nevada City
Superintendent of Public Works
bubba.highsmith@nevadacityca.gov
office: (530) 265-2496 ext. 148
Cell: (530) 277-0278

CONFIDENTIALITY NOTICE: This communication with its contents may contain confidential and/or legally privileged information. It is solely for the use of the intended recipient(s). Unauthorized interception, review, use or disclosure is prohibited and may violate applicable laws including the Electronic Communications Privacy Act. If you are not the intended recipient, please contact the sender and destroy all copies of the communication.

From: Tanya Horton <Tanya.Horton@nevadacityca.gov>
Sent: Thursday, February 6, 2020 10:56 AM
To: Paul Rohde <Paul.Rohde@nevadacityca.gov>; Bubba Highsmith <bubba.highsmith@nevadacityca.gov>; Sam Goodspeed <Sam.Goodspeed@nevadacityca.gov>
Subject: 4/25/20 Annual Spring Run

Hello,

Please see the above street closure request and advise. Thanks

Thank You,

Tanya Horton
City of Nevada City
Customer Service Representative
530-265-2496 x100
www.nevadacityca.gov

From: Sam Goodspeed
To: Tanya Horton; Paul Rohde; Bubba Highsmith
Subject: RE: 4/25/20 Annual Spring Run
Date: Thursday, February 6, 2020 11:30:10 AM

Tanya,

The Nevada City Fire Department has the following conditions for the proposed Nevada City United Methodist Church Spring Run event to be held on April 25, 2020.

1. Must maintain 14 ft. FIRE LANES.
2. No parking in RED ZONES.
3. No blocking of FIRE HYDRANTS.

Sincerely,

Sam Goodspeed
Division Chief
Grass Valley / Nevada City Fire Department
Office: (530) 265-2351 ext. 11
Mobile: (530) 957-9892
sam.goodspeed@nevadacityca.gov

Confidentiality Notice: The information contained in this e-mail may be confidential and legally privileged. It is intended **only** for use of the individual(s) named. If you are not the intended recipient, you are hereby notified that the disclosure, copying, distribution, or taking of any action in regards to the contents of this e-mail – except its direct delivery to the intended recipient – is strictly prohibited. If you have received this e-mail in error, please notify the sender immediately and destroy this e-mail and any attachments, and delete from your system, if applicable.

From: Tanya Horton
Sent: Thursday, February 6, 2020 10:56 AM
To: Paul Rohde <Paul.Rohde@nevadacityca.gov>; Bubba Highsmith <bubba.highsmith@nevadacityca.gov>; Sam Goodspeed <Sam.Goodspeed@nevadacityca.gov>
Subject: 4/25/20 Annual Spring Run

Hello,

Please see the above street closure request and advise. Thanks

Thank You,

From: Paul Rohde
To: Tanya Horton
Subject: RE: 4/25/20 Annual Spring Run
Date: Thursday, February 6, 2020 1:05:48 PM

The PD has no concerns

PAUL ROHDE EMAIL BANNER

From: Tanya Horton
Sent: Thursday, February 6, 2020 10:56 AM
To: Paul Rohde <Paul.Rohde@nevadacityca.gov>; Bubba Highsmith <bubba.highsmith@nevadacityca.gov>; Sam Goodspeed <Sam.Goodspeed@nevadacityca.gov>
Subject: 4/25/20 Annual Spring Run

Hello,

Please see the above street closure request and advise. Thanks

Thank You,

Tanya Horton
City of Nevada City
Customer Service Representative
530-265-2496 x100
www.nevadacityca.gov

REPORT TO CITY COUNCIL

City of Nevada City
317 Broad Street
Nevada City CA 95959
www.nevadacityca.gov

March 11, 2020

TITLE: Action Minutes February 26, 2020 City Council Meeting

RECOMMENDATION: Review and approve City Council Meeting Action Minutes of February 26, 2020.

CONTACT: Catrina Olson, City Manager

BACKGROUND / DISCUSSION:
The action minutes for the February 26, 2020 are attached for review.

ENVIRONMENTAL CONSIDERATIONS: Not applicable.

FISCAL IMPACT: Not applicable.

ATTACHMENTS:
- ✓ City Council Meeting Action Minutes February 26, 2020

CITY OF NEVADA CITY
ACTION MINUTES
REGULAR CITY COUNCIL MEETING OF FEBRUARY 26, 2020

NOTE: This meeting is available to view on the City's website www.nevadacityca.gov – Go to *Quick Links* and Click on *Agendas & Minutes* and find the Archived Videos in the middle of the screen. Select the meeting date and Click on *Video* to watch the meeting. For website assistance, please contact Loree' McCay, Deputy City Clerk at (530) 265-2496, ext 134.

- City Council Meetings are available on DVD. To order, contact City Hall - cost is $15.00 per DVD.
- Closed Session Meetings are not recorded.

CLOSED SESSION – None.

REGULAR MEETING – 6:30 PM - Call to Order

Roll Call: Present: Mayor Senum, Vice Mayor Minett, Council Members Parker and Moberg
Absent: Council Member Strawser

PLEDGE OF ALLEGIANCE

PROCLAMATIONS:

PRESENTATIONS:

BUSINESS FROM THE FLOOR:

1. PUBLIC COMMENT (Per Government Code Section 54954.3)
Please refer to the meeting video on the City's website at www.nevadacityca.gov.

2. COUNCIL MEMBERS REQUESTED ITEMS AND COMMITTEE REPORTS:

3. CONSENT ITEMS:

A. Subject: Fire Activity Report – January 2020
Recommendation: Receive and file.

B. Subject: Resolution 2020-13 Awarding a Contract for Aerial Mapping
Recommendation: Pass Resolution 2020-13, a Resolution of the City of Nevada City to award a contract to Dundas Geomatics Inc. in the amount of $35,000 plus $3,000 contingencies for Aerial Urban Mapping and authorize the Mayor to sign.

C. **Subject:** Ordinance No. 2020-03 Amending Nevada City Municipal Code Section 13.04050 Entitled "Water Rates-Delinquency-Penalties" Pursuant to SB 998
Recommendation: Waive the second reading and adopt the Ordinance 2020-03 amending Nevada City Municipal Code Section 13.04050 entitled "Water Rates-Delinquency-Penalties.

D. **Subject:** Replacement of Public Works Department Dump Truck Vehicle #32
Recommendation: Pass Resolution 2020-14, a Resolution of the City Council of the City of Nevada City to replace Public Works Department Dump Truck, vehicle #32, and authorize payment of the $5000 deductible.

E. **Subject:** Action Minutes February 12, 2020 City Council Meeting
Recommendation: Review and approve City Council Meeting Action Minutes of February 12, 2020.

Action: Motion by Parker, seconded by Minett to approve consent item 3A, 3C and 3E as presented. A member of the public pulled Items 3B and 3D discussion.
(Approved 4 – 0, Absent 1)

Action: After public discussion, motion by Parker, seconded by Minett to approve consent item 3B and 3D as presented.
(Approved 4 – 0, Absent 1)

4. DEPARTMENT REQUESTED ACTION ITEMS AND UPDATE REPORTS:

A. **Subject:** 2nd Quarter Financial Update, Fiscal Year (FY) 19/20
Recommendation: Receive and file.

Action: Receive and file no action.

B. **Subject:** Wastewater Treatment Plant Permit Compliance with State Regional Water Board Administrative Civil Liability
Recommendation: Receive and file.

Action: Receive and file no action.

C. **Subject:** Date Change Request for City Council Meetings in July, November and December 2020
Recommendation: Pass Resolution 2020-15, a Resolution of the City of Nevada City approving a date change request for the 2nd City Council meeting in July, the 1st Council meeting in November and cancel the 2nd meeting in November and December 2020.

Action: Motion by Minett, seconded by Parker to pass Resolution 2020-15, a Resolution of the City of Nevada City approving a date change request for the 2nd City Council meeting in July, the 1st Council meeting in November and cancel the 2nd meeting in November and December 2020.
(Approved 4 – 0, Absent 1)

D. **Subject:** Resolution 2020-16, A Resolution Adopting City Council Standards and Procedures and Rosenberg's Rules of Order
Recommendation: Pass Resolution 2020-16, a Resolution of the City of Nevada City adopting City Council Standards and Procedures for City Council members and City Council meetings and Rosenberg's Rules of Order.

Action: Motion by Minett, seconded by Moberg to pass Resolution 2020-16, a Resolution of the City of Nevada City adopting City Council Standards and Procedures for City Council members and City Council meetings and Rosenberg's Rules of Order.
(Approved 4 – 0, Absent 1)

E. **Subject:** City of Nevada City Budget Calendar Fiscal Year 2020-2021
Recommendation: Review and approve the attached budget calendar with recommended operating and capital budget preparation schedule for fiscal year (FY) 2020-2021.

Action: Motion by Minett, seconded by Parker to approved the budget calendar with recommended operating and capital budget preparation schedule to include a budget workshop set for May 14, 2020 at 9 a.m. for fiscal year (FY) 2020-2021.
(Approved 4 – 0, Absent 1)

5. PUBLIC HEARINGS:

6. OLD BUSINESS:

A. **Subject:** Freeway Visible Sign Amendment – Chevron Price Signage at 301 Sacramento Street
Recommendation: Review the "as-installed" modified signage and make a recommendation.

Action: Motion by Moberg, seconded by Minett to deny the modified sign application at the Chevron, 301 Sacramento Street, based on the finding that the sign has unusually high intensity lighting.
(Approved 4 – 0, Absent 1)

B. **Subject:** Appeal of Planning Commission Decision to Deny an Architectural Review Application for a garage door and lighting fixtures by John Conger at 224 Church Street
Recommendation:
1. After holding a public hearing, Council shall make a decision whether to uphold, overturn or modify the Planning Commission decision to deny the Architectural Review Application.

Action: Motion by Moberg, seconded by Parker to overturn the Planning Commission decision denying the Architectural Review Application and approve the application with the finding that the building at 224 Church Street is not consistent with motherlode architecture and should be respected as a product of its own time. Council also gave staff direction to resolve the conflict between Chapter 15 and Chapter 17.
(Approved 4 – 0, Absent 1)

7. NEW BUSINESS:

A. Subject: Nevada City Three-Year Goals and Six-Month Strategic Objectives
Recommendation: Review and approve City of Nevada City three-year goals and six-month strategic objectives.

Action: Motion by Moberg, seconded by Parker approve the City of Nevada three-year goals and six-month strategic objectives.
(Approved 4 – 0, Absent 1)

8. CORRESPONDENCE:

9. ANNOUNCEMENTS:

10. CITY MANAGER'S REPORT: The City Manager provided a detailed written report attached to the agenda.

11. ADJOURNMENT: - 8:24PM

AYES:

NOES:

ABSTAIN:

ABSENT:

ATTEST:

_____
Reinette Senum, Mayor

_____
Niel Locke, City Clerk

REPORT TO CITY COUNCIL

City of Nevada City
317 Broad Street
Nevada City, CA 95959
www.nevadacityca.gov

March 11, 2020

TITLE: Updated Resolution 2020-XX, Authorization for Submittal of Applications to CalRecycle for Payment Programs

RECOMMENDATION: Pass Resolution 2020-XX, a Resolution of the City of Nevada City authorizing submittal of application to CalRecycle for payment programs and related authorizations.

CONTACT: Catrina Olson, City Manager

BACKGROUND / DISCUSSION:
Annually the City applies for grant funds from CalRecycle for the purposes of supporting ongoing citywide recycling efforts and programs. Pursuant to Public Resources Code sections 48000et seq., 14581, and 42023.1(g), the Department of Resources Recycling Recovery (CalRecycle) has established various payment programs to make payments to qualifying jurisdictions. CalRecycle is required to establish procedures governing the administration of the payment programs. As part of these requirements, CalRecycle is now requiring jurisdictions to declare by Resolution, certain authorizations related the submission of applications to CalRecycle.

On April 13, 2016 the City approved Resolution 2016-16 authorizing the City to submit applications to CalRecycle for payment programs which authorized the Assistant City Manager or his/her designee to sign. The position of Assistant City Manager no longer exists. CalRecycle has requested that the City provide an updated Resolution designating a new authorized signer.

The updated Resolution designates the City Manager or his/her designee as the authorized signer. Resolution 2020-XX will supersede Resolution 2016-16

FISCAL IMPACT: Funds awarded annually are $5,000 and have a specified use towards citywide recycling programs.

ATTACHMENT:
- ✓ Resolution 2020-XX, a Resolution of the City of Nevada City Authorizing Submittal of Application to CalRecycle for Payment Programs and Related Authorizations

RESOLUTION NO. 2020-XX

A RESOLUTION OF THE CITY OF NEVADA CITY AUTHORIZING SUBMITTAL OF APPLICATION TO CALRECYCLE FOR PAYMENT PROGRAMS AND RELATED AUTHORIZATIONS

WHEREAS, the City passed Resolution 2016-16 on April 13, 2016 authorizing submittal of application to CalRecycle for Payment Programs; and

WHEREAS, the Resolution designated the Assistant City Manager or his/her designee as authorized signatory which is a position that no longer exists; and

WHEREAS, the Resolution being presented for adoption supersedes Resolution 2016-16, and

WHEREAS, pursuant to Public Resources Code sections 48000 et seq., 14581, and 42023.1(g), the Department of Resources Recycling and Recovery (CalRecycle) has established various payment programs to make payments to qualifying jurisdictions; and

WHEREAS, in furtherance of this authority CalRecycle is required to establish procedures governing the administration of the payment programs; and

WHEREAS, CalRecycle's procedures for administering payment programs require, among other things, an applicant's governing body to declare by resolution certain authorizations related to the administration of the payment program.

NOW, THEREFORE, BE IT RESOLVED that City of Nevada City is authorized to submit an application to CalRecycle for any and all payment programs offered; and

BE IT FURTHER RESOLVED that the City Manager, or his/her designee, is hereby authorized as Signature Authority to execute all documents necessary to implement and secure payment; and

BE IT FURTHER RESOLVED that this authorization is effective until rescinded by the Signature Authority or this governing body.

PASSED AND ADOPTED at a regular scheduled meeting of the City Council held on this 11th day of March, 2020 by the following vote.

AYES:

NOES:

ABSENT:

ABSTAIN:

_____
Reinette Senum, Mayor

ATTEST:

_____
Niel Locke, City Clerk

REPORT TO CITY COUNCIL

City of Nevada City
317 Broad Street
Nevada City, CA 95959
www.nevadacityca.gov

March 11, 2020

TITLE: **Nevada City Chamber of Commerce Street Closure Requests**

RECOMMENDATION: Review and authorize Nevada City Chamber of Commerce street closure requests per application.

CONTACT: Catrina Olson, City Manager

BACKGROUND / DISCUSSION:
The City recently received a binder from the Nevada City Chamber of Commerce for ten (10) events in which street closures are requested over the next twelve (12) months. Additional information pertaining to this request and the following events is summarized in the attached materials with staff conditions from the Fire Department, Police Department and Department of Public Works:

- First Friday Artwalk
- Nevada City Village Market Day
- Nevada City Bicycle Classic Brewfest
- Nevada City Bicycle Classic
- 4th of July Parada
- Summer Nights
- Constitution Day Concert
- Constitution Day Parade
- Victorian Christmas
- Mardi Gras Street Faire & Parade

ENVIRONMENTAL CONSIDERATIONS: Not applicable.

FISCAL IMPACT: Not applicable.

ATTACHMENT:
- ✓ Street Closure/Special Event Applications

CITY OF NEVADA CITY

SPECIAL EVENT APPLICATION / CONTRACT

EVENT NAME: FIRST FRIDAY ARTWALK MAY 1, 2020 JUNE 5, 2020 ~~JULY 3, 2020~~ AUG 7, 2020

EVENT INFORMATION. Please attach a detailed description of your event to this application (e.g. Overall summary, open to the public? How being publicized? Kid/family friendly? Rain or shine? Etc.)

Type of Event (Check all that apply)

___ Parade/Procession ___ Concert ___ Street Festival/Block Party

___ Run/Walk/Bicycle ___ Fundraiser ✓ Other: ARTWALK

Has this event been produced before? (Yes) No

Is this an annual event? (Yes) No

Will there be an admission or entry fee? Yes (No)

If yes, fee per adult: $_____ Fee per child: $_____

Event Date(s) MAY 1st, JUNE 7th, JULY 3rd, AUGUST 7th 2020

Expected number of:

Attendees 500-1000 Participants 100 Volunteers 10

Units and floats for parade: _____

Event Hours Start 5pm End 9:30 pm

Set-up Date SEE DATES ABOVE Time 4pm

Break Down Date SEE DATES ABOVE Time 10pm

Names of street(s), sidewalk(s), alley(s) proposed to be closed (Attach additional pages or a map if necessary). Note that it may be necessary to consult with a Police Lieutenant (265-2626) and/or the Public Works Superintendent (265-2496) to accurately identify requested street closures.

YORK between BROAD & COMMERCIAL

COMMERCIAL between N. PINE & THREE FORKS PARKING LOT ENTRANCE

Additional Facilities Requested

Event organizers may be asked to complete a Facility Rental Contract with details about use of these additional facilities. Rental fees & cleaning deposits may apply.

___ Robinson Plaza ___ Calanan Park ___ Other: _____

Please note whether your event includes any of the following. If any apply, attach details.

✓ Amplified sound ___ Concessions ___ Food Vendors

✓ Stages/Platforms small platform on York St. ___ Food Cooking ___ Alcohol sales

✓ Tents/Temporary Structures ___ Animals will be present ✓ Temporary Lighting

APPLICANT INFORMATION

Sponsoring Organization/Company NEVADA CITY CHAMBER OF COMMERCE

Name of Applicant/Responsible Party CYNTHIA LEVESQUE

Street Address 132 MAIN ST Apt/Unit/Suite _____

City NEVADA CITY State CA Zip Code 95959

Email info@nevadacitychamber.com

Daytime Phone 530.265.2692 Cell Phone _____

Does the sponsoring organization have experience producing similar events? Yes / No (Circle One)

Event Contact for Public Information

Name CYNTHIA LEVESQUE Contact Phone 530.575.8846

Email nevacoboutique@gmail.com

Website _____

Day of Event Contact Information

On-site Contact Name CYNTHIA LEVESQUE

On-site Contact Cell Number 530.575.8846

Day of Event ALTERNATE Contact Information

On-site Contact Name _____

On-site Contact Cell Number _____

APPLICATION FEES

The City requires the payment of a non-refundable application fee upon submission of your completed application. Late fees apply to applications filed less than 90 days in advance of an event. The City does not guarantee any application submitted less than 45 days in advance will be able to be submitted to the City Council for consideration prior to the planned event. Please select from the following table the fee(s) that apply to your application:

_____ $100 Timely application for single new event OR old event with new sponsor
_____ $50 Timely application for repeat of event with same sponsor
_____ $25 For each additional application for new event by the same sponsor
_____ $10 For each additional application for repeat of event with same sponsor
_____ $75 Additional fee for applications filed less than 90 days in advance of an event
_____ $100 Rental Fee for Robinson Plaza or Calanan Park
_____ $100 Cleaning Deposit for use of Robinson Plaza or Calanan Park

$_____ Total Fees

APPLICANT AUTHORIZATION AND INDEMNITY

To the extent allowed by law, Applicant agrees to defend, indemnify, and hold harmless the City of Nevada City, its agents, officials, and employees from and against all claims, damages, losses, injuries, illness, accidents relating to, arising out of, or resulting from, the use of this Special Event Application and the information contained therein, and any resulting Contract.

Applicant acknowledges that the information provided in this Application is true and accurate to the best of Applicant's knowledge and belief.

I have read, understand and agree to comply with all the information provided in the Special Event Application (attached) and any resulting permits and Special Event Contract if approved by the City Council.

Cathy Dorr Casey — 2.27.20

Signature of Applicant/Responsible Party — *Date*

CITY OF NEVADA CITY
SPECIAL EVENT GUIDELINES

OVERVIEW

Thank you for choosing the City of Nevada City as the location for your event. The City requires the submittal of a Special Event Application as a pre-condition of considering whether to enter into an agreement to grant temporary use of all or any portion of a public street, sidewalk or alley.

Application materials must be completed in full and submitted to the City at least 90 days prior to your event date, and no more than one year in advance of the event date. Applications are accepted on a first-come, first-served basis. A non-refundable application fee must be paid upon submission of your completed application. Use "NA" for "not applicable" to questions or sections that do not apply to your event. Incomplete applications will not be accepted and will delay processing which could affect the availability of your preferred event date or location. Please note the information you provide becomes public information.

City staff review the Application/Contract. Notes from Police, Fire, Public Works and Parks & Recreation will be presented to City Council for consideration. City Council approves or disapproves your Application/Contract at a formal noticed public meeting. Applicants are strongly encouraged to attend the designated City Council meeting in order to discuss their proposed event and answer related questions. Please ensure you have City Council approval before marketing or advertising your event.

EVENT REQUIREMENTS

Alcohol. If alcohol is sold at your event, an Alcohol Permit from California Alcohol Beverage Control (ABC) is required. Please contact ABC at (916) 419-1319.

Amplified Sound. If the event will have amplified sound, applicant is required to have an event staff member responsible for monitoring sound levels to assure compliance with City noise standards when sound/music/noise may be audible beyond the event venue.

Business License. All vendors participating in an event held in Nevada City must obtain a current business license. For information about business license requirements, call City Hall at (530) 265-2496 x100.

Form of Payment. The City accepts payment in the form of cash, personal/business check, money order or cashier's check. Please note there will be a $25 service charge for all returned checks.

Insurance. The applicant and/or the sponsoring organization is required to provide proof of insurance. A current or valid Certificate of General Liability Insurance in the amount of $1,000,000 and an endorsement (CG2026 or equivalent) naming the City of Nevada City as additional insured will be required at least 30 days prior to the event.

Event Notification. An event can change the normal flow of residential and business activity potentially causing a negative impact on the community. As the event organizer, you are responsible for notifying those residents and businesses that are adjacent to the planned closure prior to submission of your Application. Applicants must meet the Event Notification requirements unless the event is sponsored by the Nevada City Chamber of Commerce or has been approved and held annually in the same manner for three or more years. The preferred method of notification is the Requested Special Event Notification Form (Addendum A). Unless otherwise exempt, your application materials must include a signed Notification Certification (Addendum B) confirming adjacent residents and businesses were notified of the planned event.

Parking. Applicants will be required to work with the Nevada City Police Department to facilitate ingress/egress requirements for event participants.

Restrooms. Public restrooms are limited to two for downtown events, one at Robinson Plaza and one in the Commercial Street parking lot. If your event is planned for more than 50 people or in an area away from either public restroom, you may be required to provide restroom accommodations and hand washing facilities for event attendees in the quantity prescribed by the City.

Waste Management/Recycling. You are responsible for properly disposing of all waste and garbage throughout the term of your event, and immediately upon conclusion of the event the area must be returned to a clean condition. Therefore, the City may require the applicant to provide trash and recycling containers if the event involves food or drink vendors. Should cleanup be inadequate or damage to City property occurs, you will be billed at full recovery rates, plus overhead for cleanup and repair.

Runs/Walks/Bicycle. If you put chalk, stickers or other directional markings on streets, sidewalks or trails, these markings must all be removed at the end of your event.

CHECKLIST

Before you submit your application to the City of Nevada City, please make sure you have completed the following steps:

____ Sign AND date your Application/Contract.

____ Attach a detailed event description and additional information as needed

____ Secure required insurance for the event.

____ Include a Notification Certification confirming businesses and residents have been notified of the planned event.

____ Calculate and include the applicable fee.

Submit your completed application to:

City of Nevada City, Attn. Special Event Applications, 317 Broad Street, Nevada City, CA 95959

CITY OF NEVADA CITY
SPECIAL EVENT APPLICATION / CONTRACT

EVENT NAME: NEVADA CITY VILLAGE MARKET DAY MAY 17th 2020

EVENT INFORMATION. Please attach a detailed description of your event to this application (e.g. Overall summary, open to the public? How being publicized? Kid/family friendly? Rain or shine? Etc.)

Type of Event (Check all that apply)

___ Parade/Procession ___ Concert X Street Festival/Block Party
___ Run/Walk/Bicycle ___ Fundraiser ___ Other: _____

Has this event been produced before? (Yes) No
Is this an annual event? (Yes) No
Will there be an admission or entry fee? Yes (No)
If yes, fee per adult: $_____ Fee per child: $_____

Event Date(s) MAY 17th 2020

Expected number of:
Attendees 500 Participants 20 Volunteers 7
Units and floats for parade: _____

Event Hours Start 11am End 5pm
Set-up Date 5.17.20 Time 9-11am
Break Down Date 5.17.20 Time 5-6:30pm

Names of street(s), sidewalk(s), alley(s) proposed to be closed (Attach additional pages or a map if necessary). Note that it may be necessary to consult with a Police Lieutenant (265-2626) and/or the Public Works Superintendent (265-2496) to accurately identify requested street closures.

N. PINE STREET between BROAD ST. & COMMERCIAL
_____ between _____ & _____

Additional Facilities Requested
Event organizers may be asked to complete a Facility Rental Contract with details about use of these additional facilities. Rental fees & cleaning deposits may apply.
___ Robinson Plaza ___ Calanan Park ___ Other: _____

Please note whether your event includes any of the following. If any apply, attach details.
✓ Amplified sound ✓ Concessions ___ Food Vendors
___ Stages/Platforms ___ Food Cooking ___ Alcohol sales
✓ Tents/Temporary Structures ___ Animals will be present ___ Temporary Lighting

APPLICANT INFORMATION

Sponsoring Organization/Company NEVADA CITY CHAMBER

Name of Applicant/Responsible Party NEVADA CITY CHAMBER

Street Address 132 MAIN ST. Apt/Unit/Suite _____

City NEVADA CITY State CA Zip Code 95959

Email info@nevadacitychamber.com

Daytime Phone 530.265.2692 Cell Phone _____

Does the sponsoring organization have experience producing similar events? (Yes) / No (Circle One)

Event Contact for Public Information

Name NEVADA CITY CHAMBER Contact Phone 530.265.2692

Email info@nevadacitychamber.com

Website www.nevadacitychamber.com

Day of Event Contact Information

On-site Contact Name RUDY UDARBE - TRUFFLE SHOP

On-site Contact Cell Number 530.264.0405

Day of Event ALTERNATE Contact Information

On-site Contact Name EILEEN JORGENSEN - MAGIC CARPET

On-site Contact Cell Number 530.265.9229

APPLICATION FEES

The City requires the payment of a non-refundable application fee upon submission of your completed application. Late fees apply to applications filed less than 90 days in advance of an event. The City does not guarantee any application submitted less than 45 days in advance will be able to be submitted to the City Council for consideration prior to the planned event. Please select from the following table the fee(s) that apply to your application:

_____ $100 Timely application for single new event OR old event with new sponsor
_____ $50 Timely application for repeat of event with same sponsor
_____ $25 For each additional application for new event by the same sponsor
_____ $10 For each additional application for repeat of event with same sponsor
_____ $75 Additional fee for applications filed less than 90 days in advance of an event
_____ $100 Rental Fee for Robinson Plaza or Calanan Park
_____ $100 Cleaning Deposit for use of Robinson Plaza or Calanan Park

$ _____ Total Fees

APPLICANT AUTHORIZATION AND INDEMNITY

To the extent allowed by law, Applicant agrees to defend, indemnify, and hold harmless the City of Nevada City, its agents, officials, and employees from and against all claims, damages, losses, injuries, illness, accidents relating to, arising out of, or resulting from, the use of this Special Event Application and the information contained therein, and any resulting Contract.

Applicant acknowledges that the information provided in this Application is true and accurate to the best of Applicant's knowledge and belief.

I have read, understand and agree to comply with all the information provided in the Special Event Application (attached) and any resulting permits and Special Event Contract if approved by the City Council.

Cathy Whitlesey

Signature of Applicant/Responsible Party

2.27.20

Date

CITY OF NEVADA CITY
SPECIAL EVENT GUIDELINES

OVERVIEW

Thank you for choosing the City of Nevada City as the location for your event. The City requires the submittal of a Special Event Application as a pre-condition of considering whether to enter into an agreement to grant temporary use of all or any portion of a public street, sidewalk or alley.

Application materials must be completed in full and submitted to the City at least 90 days prior to your event date, and no more than one year in advance of the event date. Applications are accepted on a first-come, first-served basis. A non-refundable application fee must be paid upon submission of your completed application. Use "NA" for "not applicable" to questions or sections that do not apply to your event. Incomplete applications will not be accepted and will delay processing which could affect the availability of your preferred event date or location. Please note the information you provide becomes public information.

City staff review the Application/Contract. Notes from Police, Fire, Public Works and Parks & Recreation will be presented to City Council for consideration. City Council approves or disapproves your Application/Contract at a formal noticed public meeting. Applicants are strongly encouraged to attend the designated City Council meeting in order to discuss their proposed event and answer related questions. Please ensure you have City Council approval before marketing or advertising your event.

EVENT REQUIREMENTS

Alcohol. If alcohol is sold at your event, an Alcohol Permit from California Alcohol Beverage Control (ABC) is required. Please contact ABC at (916) 419-1319.

Amplified Sound. If the event will have amplified sound, applicant is required to have an event staff member responsible for monitoring sound levels to assure compliance with City noise standards when sound/music/noise may be audible beyond the event venue.

Business License. All vendors participating in an event held in Nevada City must obtain a current business license. For information about business license requirements, call City Hall at (530) 265-2496 x100.

Form of Payment. The City accepts payment in the form of cash, personal/business check, money order or cashier's check. Please note there will be a $25 service charge for all returned checks.

Insurance. The applicant and/or the sponsoring organization is required to provide proof of insurance. A current or valid Certificate of General Liability Insurance in the amount of $1,000,000 and an endorsement (CG2026 or equivalent) naming the City of Nevada City as additional insured will be required at least 30 days prior to the event.

Event Notification. An event can change the normal flow of residential and business activity potentially causing a negative impact on the community. As the event organizer, you are responsible for notifying those residents and businesses that are adjacent to the planned closure prior to submission of your Application. Applicants must meet the Event Notification requirements unless the event is sponsored by the Nevada City Chamber of Commerce or has been approved and held annually in the same manner for three or more years. The preferred method of notification is the Requested Special Event Notification Form (Addendum A). Unless otherwise exempt, your application materials must include a signed Notification Certification (Addendum B) confirming adjacent residents and businesses were notified of the planned event.

Parking. Applicants will be required to work with the Nevada City Police Department to facilitate ingress/egress requirements for event participants.

Restrooms. Public restrooms are limited to two for downtown events, one at Robinson Plaza and one in the Commercial Street parking lot. If your event is planned for more than 50 people or in an area away from either public restroom, you may be required to provide restroom accommodations and hand washing facilities for event attendees in the quantity prescribed by the City.

Waste Management/Recycling. You are responsible for properly disposing of all waste and garbage throughout the term of your event, and immediately upon conclusion of the event the area must be returned to a clean condition. Therefore, the City may require the applicant to provide trash and recycling containers if the event involves food or drink vendors. Should cleanup be inadequate or damage to City property occurs, you will be billed at full recovery rates, plus overhead for cleanup and repair.

Runs/Walks/Bicycle. If you put chalk, stickers or other directional markings on streets, sidewalks or trails, these markings must all be removed at the end of your event.

CHECKLIST

Before you submit your application to the City of Nevada City, please make sure you have completed the following steps:

____ Sign AND date your Application/Contract.

____ Attach a detailed event description and additional information as needed

____ Secure required insurance for the event.

____ Include a Notification Certification confirming businesses and residents have been notified of the planned event.

____ Calculate and include the applicable fee.

Submit your completed application to:

City of Nevada City, Attn. Special Event Applications, 317 Broad Street, Nevada City, CA 95959

CITY OF NEVADA CITY
SPECIAL EVENT APPLICATION / CONTRACT

EVENT NAME: NEVADA CITY CLASSIC BREWFEST JUNE 13, 2020

EVENT INFORMATION. Please attach a detailed description of your event to this application (e.g. Overall summary, open to the public? How being publicized? Kid/family friendly? Rain or shine? Etc.)

Type of Event (Check all that apply)

___ Parade/Procession ___ Concert ✓ Street Festival/Block Party
___ Run/Walk/Bicycle ___ Fundraiser ___ Other: _____

Has this event been produced before? (Yes) No
Is this an annual event? (Yes) No
Will there be an admission or entry fee? (Yes) No
If yes, fee per adult: $_____ Fee per child: $ N/A

Event Date(s) JUNE 13, 2020

Expected number of:
Attendees 100 Participants 10 Volunteers 5
Units and floats for parade: _____

Event Hours Start 6pm End 9pm
Set-up Date 6.13.20 Time 4-6 pm
Break Down Date 6.13.20 Time 9-10:30pm

Names of street(s), sidewalk(s), alley(s) proposed to be closed (Attach additional pages or a map if necessary). Note that it may be necessary to consult with a Police Lieutenant (265-2626) and/or the Public Works Superintendent (265-2496) to accurately identify requested street closures.

Commercial between N. Pine & Main St.
_____ between _____ & _____

Additional Facilities Requested
Event organizers may be asked to complete a Facility Rental Contract with details about use of these additional facilities. Rental fees & cleaning deposits may apply.
___ Robinson Plaza ___ Calanan Park ___ Other: _____

Please note whether your event includes any of the following. If any apply, attach details.

✓ Amplified sound ___ Concessions ✓ Food Vendors
✓ Stages/Platforms ✓ Food Cooking ✓ Alcohol sales
✓ Tents/Temporary Structures ___ Animals will be present ✓ Temporary Lighting

APPLICANT INFORMATION

Sponsoring Organization/Company NEVADA CITY CHAMBER

Name of Applicant/Responsible Party NEVADA CITY CHAMBER

Street Address 132 MAIN ST Apt/Unit/Suite _____

City NEVADA CITY State CA Zip Code 95959

Email info@nevadacitychamber.com

Daytime Phone 530.265.2692 Cell Phone _____

Does the sponsoring organization have experience producing similar events? (Yes) / No (Circle One)

Event Contact for Public Information

Name NEVADA CITY CHAMBER Contact Phone 530.265.2692

Email info@nevadacitychamber.com

Website www.nevadacitychamber.com

Day of Event Contact Information

On-site Contact Name MATT MARGULIES

On-site Contact Cell Number 530.263.8132

Day of Event <u>ALTERNATE</u> Contact Information

On-site Contact Name _____

On-site Contact Cell Number _____

APPLICATION FEES

The City requires the payment of a non-refundable application fee upon submission of your completed application. Late fees apply to applications filed less than 90 days in advance of an event. The City does not guarantee any application submitted less than 45 days in advance will be able to be submitted to the City Council for consideration prior to the planned event. Please select from the following table the fee(s) that apply to your application:

_____ $100 Timely application for single new event OR old event with new sponsor
_____ $50 Timely application for repeat of event with same sponsor
_____ $25 For each additional application for new event by the same sponsor
_____ $10 For each additional application for repeat of event with same sponsor
_____ $75 Additional fee for applications filed less than 90 days in advance of an event
_____ $100 Rental Fee for Robinson Plaza or Calanan Park
_____ $100 Cleaning Deposit for use of Robinson Plaza or Calanan Park

$_____ Total Fees

APPLICANT AUTHORIZATION AND INDEMNITY

To the extent allowed by law, Applicant agrees to defend, indemnify, and hold harmless the City of Nevada City, its agents, officials, and employees from and against all claims, damages, losses, injuries, illness, accidents relating to, arising out of, or resulting from, the use of this Special Event Application and the information contained therein, and any resulting Contract.

Applicant acknowledges that the information provided in this Application is true and accurate to the best of Applicant's knowledge and belief.

I have read, understand and agree to comply with all the information provided in the Special Event Application (attached) and any resulting permits and Special Event Contract if approved by the City Council.

Cathy Whitlesey

Signature of Applicant/Responsible Party

2.27.20

Date

CITY OF NEVADA CITY
SPECIAL EVENT GUIDELINES

OVERVIEW

Thank you for choosing the City of Nevada City as the location for your event. The City requires the submittal of a Special Event Application as a pre-condition of considering whether to enter into an agreement to grant temporary use of all or any portion of a public street, sidewalk or alley.

Application materials must be completed in full and submitted to the City at least 90 days prior to your event date, and no more than one year in advance of the event date. Applications are accepted on a first-come, first-served basis. A non-refundable application fee must be paid upon submission of your completed application. Use "NA" for "not applicable" to questions or sections that do not apply to your event. Incomplete applications will not be accepted and will delay processing which could affect the availability of your preferred event date or location. Please note the information you provide becomes public information.

City staff review the Application/Contract. Notes from Police, Fire, Public Works and Parks & Recreation will be presented to City Council for consideration. City Council approves or disapproves your Application/Contract at a formal noticed public meeting. Applicants are strongly encouraged to attend the designated City Council meeting in order to discuss their proposed event and answer related questions. Please ensure you have City Council approval before marketing or advertising your event.

EVENT REQUIREMENTS

Alcohol. If alcohol is sold at your event, an Alcohol Permit from California Alcohol Beverage Control (ABC) is required. Please contact ABC at (916) 419-1319.

Amplified Sound. If the event will have amplified sound, applicant is required to have an event staff member responsible for monitoring sound levels to assure compliance with City noise standards when sound/music/noise may be audible beyond the event venue.

Business License. All vendors participating in an event held in Nevada City must obtain a current business license. For information about business license requirements, call City Hall at (530) 265-2496 x100.

Form of Payment. The City accepts payment in the form of cash, personal/business check, money order or cashier's check. Please note there will be a $25 service charge for all returned checks.

Insurance. The applicant and/or the sponsoring organization is required to provide proof of insurance. A current or valid Certificate of General Liability Insurance in the amount of $1,000,000 and an endorsement (CG2026 or equivalent) naming the City of Nevada City as additional insured will be required at least 30 days prior to the event.

Event Notification. An event can change the normal flow of residential and business activity potentially causing a negative impact on the community. As the event organizer, you are responsible for notifying those residents and businesses that are adjacent to the planned closure prior to submission of your Application. Applicants must meet the Event Notification requirements unless the event is sponsored by the Nevada City Chamber of Commerce or has been approved and held annually in the same manner for three or more years. The preferred method of notification is the Requested Special Event Notification Form (Addendum A). Unless otherwise exempt, your application materials must include a signed Notification Certification (Addendum B) confirming adjacent residents and businesses were notified of the planned event.

Parking. Applicants will be required to work with the Nevada City Police Department to facilitate ingress/egress requirements for event participants.

Restrooms. Public restrooms are limited to two for downtown events, one at Robinson Plaza and one in the Commercial Street parking lot. If your event is planned for more than 50 people or in an area away from either public restroom, you may be required to provide restroom accommodations and hand washing facilities for event attendees in the quantity prescribed by the City.

Waste Management/Recycling. You are responsible for properly disposing of all waste and garbage throughout the term of your event, and immediately upon conclusion of the event the area must be returned to a clean condition. Therefore, the City may require the applicant to provide trash and recycling containers if the event involves food or drink vendors. Should cleanup be inadequate or damage to City property occurs, you will be billed at full recovery rates, plus overhead for cleanup and repair.

Runs/Walks/Bicycle. If you put chalk, stickers or other directional markings on streets, sidewalks or trails, these markings must all be removed at the end of your event.

CHECKLIST

Before you submit your application to the City of Nevada City, please make sure you have completed the following steps:

____ Sign AND date your Application/Contract.

____ Attach a detailed event description and additional information as needed

____ Secure required insurance for the event.

____ Include a Notification Certification confirming businesses and residents have been notified of the planned event.

____ Calculate and include the applicable fee.

Submit your completed application to:

City of Nevada City, Attn. Special Event Applications, 317 Broad Street, Nevada City, CA 95959

CITY OF NEVADA CITY
SPECIAL EVENT APPLICATION / CONTRACT

EVENT NAME: NEVADA CITY BICYCLE CLASSIC JUNE 14, 2020

EVENT INFORMATION. Please attach a detailed description of your event to this application (e.g. Overall summary, open to the public? How being publicized? Kid/family friendly? Rain or shine? Etc.)

Type of Event (Check all that apply)

___ Parade/Procession ___ Concert ✓ Street Festival/Block Party
✓ Run/Walk/Bicycle ___ Fundraiser ___ Other: _____

Has this event been produced before? (Yes) No
Is this an annual event? (Yes) No
Will there be an admission or entry fee? Yes (No)
If yes, fee per adult: $_____ Fee per child: $_____

Event Date(s) JUNE 14, 2020

Expected number of:
Attendees 3000+ Participants 500 Volunteers 150
Units and floats for parade: _____

Event Hours Start _____ End _____ (see attached appendix #1)

Set-up Date _____ Time _____

Break Down Date _____ Time _____

Names of street(s), sidewalk(s), alley(s) proposed to be closed (Attach additional pages or a map if necessary). Note that it may be necessary to consult with a Police Lieutenant (265-2626) and/or the Public Works Superintendent (265-2496) to accurately identify requested street closures.

_____ between _____ & _____
_____ between _____ & _____

Map attached

Additional Facilities Requested
Event organizers may be asked to complete a Facility Rental Contract with details about use of these additional facilities. Rental fees & cleaning deposits may apply.
___ Robinson Plaza ___ Calanan Park ___ Other: _____

Please note whether your event includes any of the following. If any apply, attach details.

✓ Amplified sound ✓ Concessions ✓ Food Vendors
✓ Stages/Platforms ✓ Food Cooking ✓ Alcohol sales
✓ Tents/Temporary Structures ___ Animals will be present ___ Temporary Lighting

2020 Nevada City Bicycle Classic Proposed Street Closure Information Appendix #1

Sunday, June 14th, 2020

- Streets closed: 7am – 7pm N. Pine from Broad to Commercial
- 8am – 7pm 200 Block of Broad from Pine to Union
- 10am* - 7pm (see attached map)

*This earlier start time is the same as 2019 and is contingent on obtaining agreement (same as 2019) from the Methodist Church at Broad & mill for a 10am start. This will allow for the running events and additional bike race catagories.

Running event(s) will take place on the exact same course as the Nevada City Bicycle Classic criterium bike race course.

Nevada City Cycling Classic proposed street closure for Sunday June 14, 2020

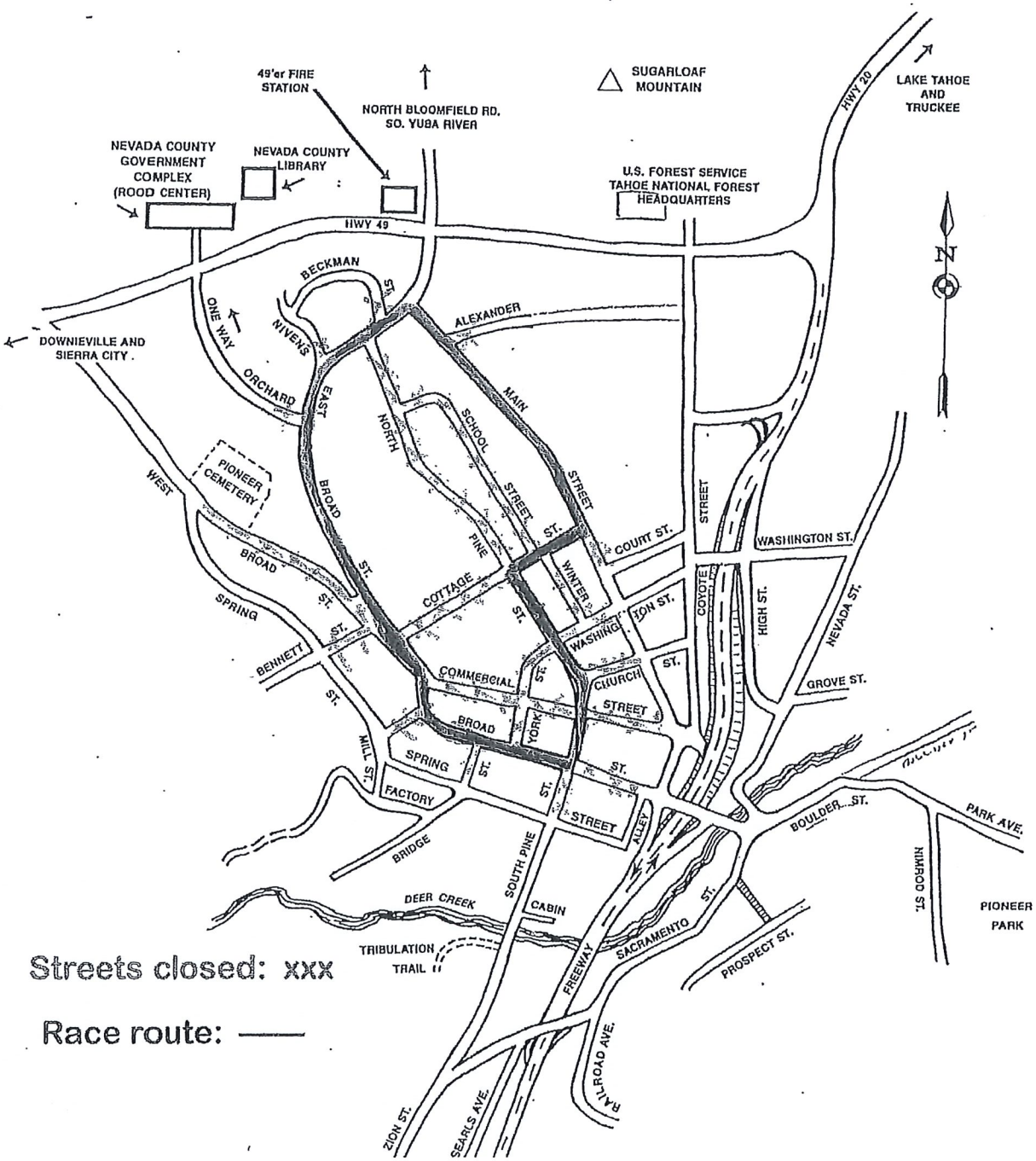

Streets closed: xxx

Race route: ——

APPLICANT INFORMATION

Sponsoring Organization/Company NEVADA CITY CHAMBER

Name of Applicant/Responsible Party NEVADA CITY CHAMBER

Street Address 132 MAIN STREET Apt/Unit/Suite _____

City NEVADA CITY State CA Zip Code 95959

Email info@nevadacitychamber.com

Daytime Phone 530.265.2692 Cell Phone _____

Does the sponsoring organization have experience producing similar events? Yes / No (Circle One)

Event Contact for Public Information

Name NEVADA CITY CHAMBER Contact Phone 530.265.2692

Email info@nevadacitychamber.com

Website www.nevadacitychamber.com

Day of Event Contact Information

On-site Contact Name DUANE STRAWSER

On-site Contact Cell Number 530.263.3388

Day of Event ALTERNATE Contact Information

On-site Contact Name CATHY WHITTLESEY

On-site Contact Cell Number 530.913.7064

APPLICATION FEES

The City requires the payment of a non-refundable application fee upon submission of your completed application. Late fees apply to applications filed less than 90 days in advance of an event. The City does not guarantee any application submitted less than 45 days in advance will be able to be submitted to the City Council for consideration prior to the planned event. Please select from the following table the fee(s) that apply to your application:

_____ $100 Timely application for single new event OR old event with new sponsor
_____ $50 Timely application for repeat of event with same sponsor
_____ $25 For each additional application for new event by the same sponsor
_____ $10 For each additional application for repeat of event with same sponsor
_____ $75 Additional fee for applications filed less than 90 days in advance of an event
_____ $100 Rental Fee for Robinson Plaza or Calanan Park
_____ $100 Cleaning Deposit for use of Robinson Plaza or Calanan Park

$_____ Total Fees

APPLICANT AUTHORIZATION AND INDEMNITY

To the extent allowed by law, Applicant agrees to defend, indemnify, and hold harmless the City of Nevada City, its agents, officials, and employees from and against all claims, damages, losses, injuries, illness, accidents relating to, arising out of, or resulting from, the use of this Special Event Application and the information contained therein, and any resulting Contract.

Applicant acknowledges that the information provided in this Application is true and accurate to the best of Applicant's knowledge and belief.

I have read, understand and agree to comply with all the information provided in the Special Event Application (attached) and any resulting permits and Special Event Contract if approved by the City Council.

Cathy Whitesey

Signature of Applicant/Responsible Party

2.27.20

Date

CITY OF NEVADA CITY
SPECIAL EVENT GUIDELINES

OVERVIEW

Thank you for choosing the City of Nevada City as the location for your event. The City requires the submittal of a Special Event Application as a pre-condition of considering whether to enter into an agreement to grant temporary use of all or any portion of a public street, sidewalk or alley.

Application materials must be completed in full and submitted to the City at least 90 days prior to your event date, and no more than one year in advance of the event date. Applications are accepted on a first-come, first-served basis. A non-refundable application fee must be paid upon submission of your completed application. Use "NA" for "not applicable" to questions or sections that do not apply to your event. Incomplete applications will not be accepted and will delay processing which could affect the availability of your preferred event date or location. Please note the information you provide becomes public information.

City staff review the Application/Contract. Notes from Police, Fire, Public Works and Parks & Recreation will be presented to City Council for consideration. City Council approves or disapproves your Application/Contract at a formal noticed public meeting. Applicants are strongly encouraged to attend the designated City Council meeting in order to discuss their proposed event and answer related questions. Please ensure you have City Council approval before marketing or advertising your event.

EVENT REQUIREMENTS

Alcohol. If alcohol is sold at your event, an Alcohol Permit from California Alcohol Beverage Control (ABC) is required. Please contact ABC at (916) 419-1319.

Amplified Sound. If the event will have amplified sound, applicant is required to have an event staff member responsible for monitoring sound levels to assure compliance with City noise standards when sound/music/noise may be audible beyond the event venue.

Business License. All vendors participating in an event held in Nevada City must obtain a current business license. For information about business license requirements, call City Hall at (530) 265-2496 x100.

Form of Payment. The City accepts payment in the form of cash, personal/business check, money order or cashier's check. Please note there will be a $25 service charge for all returned checks.

Insurance. The applicant and/or the sponsoring organization is required to provide proof of insurance. A current or valid Certificate of General Liability Insurance in the amount of $1,000,000 and an endorsement (CG2026 or equivalent) naming the City of Nevada City as additional insured will be required at least 30 days prior to the event.

Event Notification. An event can change the normal flow of residential and business activity potentially causing a negative impact on the community. As the event organizer, you are responsible for notifying those residents and businesses that are adjacent to the planned closure prior to submission of your Application. Applicants must meet the Event Notification requirements unless the event is sponsored by the Nevada City Chamber of Commerce or has been approved and held annually in the same manner for three or more years. The preferred method of notification is the Requested Special Event Notification Form (Addendum A). Unless otherwise exempt, your application materials must include a signed Notification Certification (Addendum B) confirming adjacent residents and businesses were notified of the planned event.

Parking. Applicants will be required to work with the Nevada City Police Department to facilitate ingress/egress requirements for event participants.

Restrooms. Public restrooms are limited to two for downtown events, one at Robinson Plaza and one in the Commercial Street parking lot. If your event is planned for more than 50 people or in an area away from either public restroom, you may be required to provide restroom accommodations and hand washing facilities for event attendees in the quantity prescribed by the City.

Waste Management/Recycling. You are responsible for properly disposing of all waste and garbage throughout the term of your event, and immediately upon conclusion of the event the area must be returned to a clean condition. Therefore, the City may require the applicant to provide trash and recycling containers if the event involves food or drink vendors. Should cleanup be inadequate or damage to City property occurs, you will be billed at full recovery rates, plus overhead for cleanup and repair.

Runs/Walks/Bicycle. If you put chalk, stickers or other directional markings on streets, sidewalks or trails, these markings must all be removed at the end of your event.

CHECKLIST

Before you submit your application to the City of Nevada City, please make sure you have completed the following steps:

___ Sign AND date your Application/Contract.

___ Attach a detailed event description and additional information as needed

___ Secure required insurance for the event.

___ Include a Notification Certification confirming businesses and residents have been notified of the planned event.

___ Calculate and include the applicable fee.

Submit your completed application to:

City of Nevada City, Attn. Special Event Applications, 317 Broad Street, Nevada City, CA 95959

CITY OF NEVADA CITY

SPECIAL EVENT APPLICATION / CONTRACT

EVENT NAME: 4th of July Parade JULY 4th 2020

EVENT INFORMATION. Please attach a detailed description of your event to this application (e.g. Overall summary, open to the public? How being publicized? Kid/family friendly? Rain or shine? Etc.)

Type of Event (Check all that apply)

X Parade/Procession ___ Concert ___ Street Festival/Block Party

___ Run/Walk/Bicycle ___ Fundraiser ___ Other: _____

Has this event been produced before? (Yes) No

Is this an annual event? Yes (No) EVERY OTHER YEAR

Will there be an admission or entry fee? Yes (No)

If yes, fee per adult: $_____ Fee per child: $_____

Event Date(s) JULY 4th 2020

Expected number of:

Attendees 1000 Participants 200 Volunteers 20

Units and floats for parade: _____

Event Hours Start 11:00am End 12:30pm

Set-up Date 7.4.20 Time 9am

Break Down Date 7.4.20 Time 2pm

Names of street(s), sidewalk(s), alley(s) proposed to be closed (Attach additional pages or a map if necessary). Note that it may be necessary to consult with a Police Lieutenant (265-2626) and/or the Public Works Superintendent (265-2496) to accurately identify requested street closures.

_____ between _____ & _____

_____ between _____ & _____

(See attached map)

Additional Facilities Requested

Event organizers may be asked to complete a Facility Rental Contract with details about use of these additional facilities. Rental fees & cleaning deposits may apply.

___ Robinson Plaza ___ Calanan Park ___ Other: _____

Please note whether your event includes any of the following. If any apply, attach details.

X Amplified sound X Concessions* ___ Food Vendors

___ Stages/Platforms ___ Food Cooking ___ Alcohol sales

___ Tents/Temporary Structures ___ Animals will be present ___ Temporary Lighting

*may be a few walk around vendors. No vendors placed on street

4th OF JULY PARADE

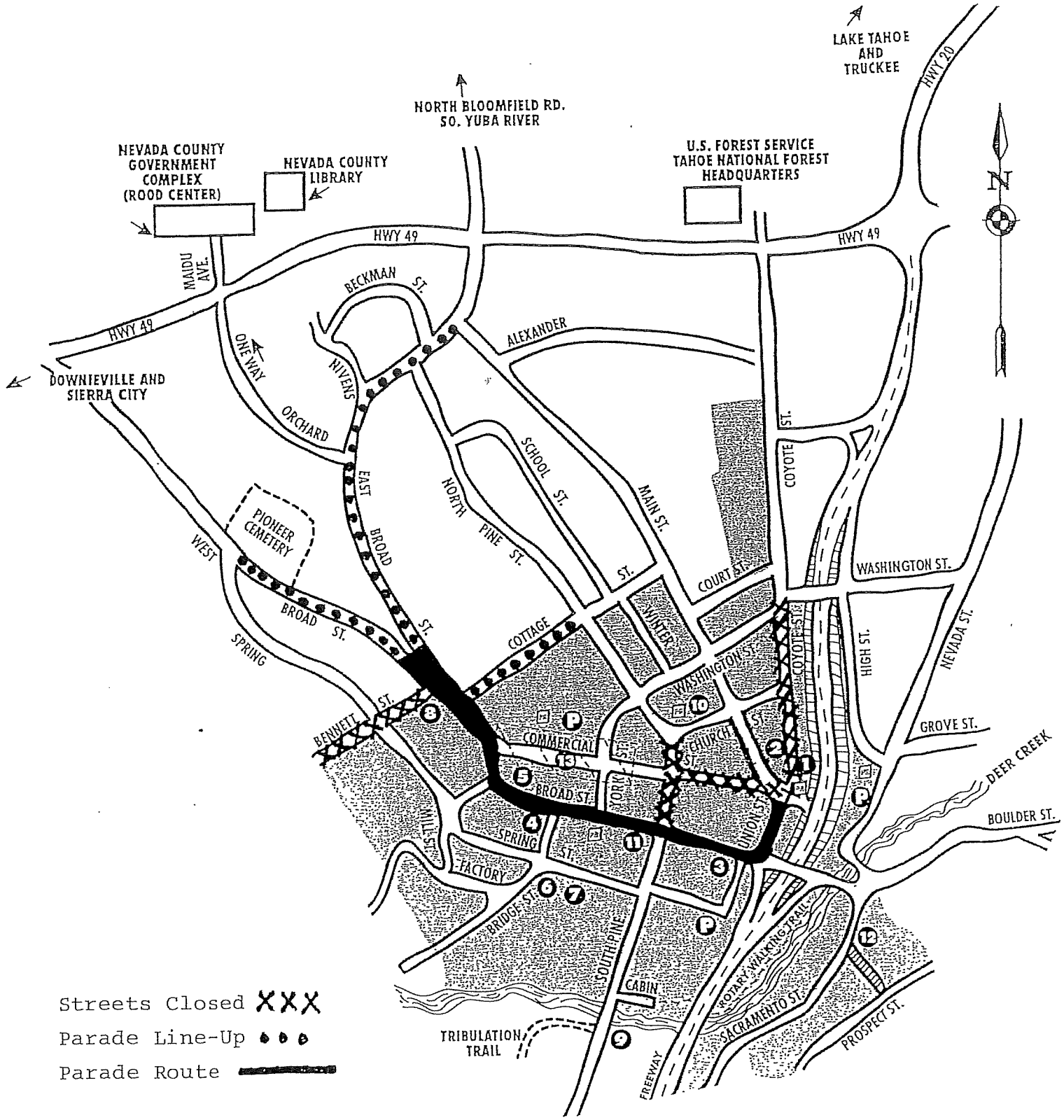

APPLICANT INFORMATION

Sponsoring Organization/Company NEVADA CITY CHAMBER

Name of Applicant/Responsible Party NEVADA CITY CHAMBER

Street Address 132 MAIN ST. Apt/Unit/Suite _____

City NEVADA CITY State CA Zip Code 95959

Email info@nevadacitychamber.com

Daytime Phone 530.265.2692 Cell Phone 530.913.7064

Does the sponsoring organization have experience producing similar events? Yes / No (Circle One)

Event Contact for Public Information

Name NEVADA CITY CHAMBER Contact Phone 530.265.2692

Email info@nevadacitychamber.com

Website nevadacitychamber.com

Day of Event Contact Information

On-site Contact Name TIM BLAGG

On-site Contact Cell Number 530.575.1978

Day of Event ALTERNATE Contact Information

On-site Contact Name CATHY WHITTLESEY

On-site Contact Cell Number 530.913.7064

APPLICATION FEES

The City requires the payment of a non-refundable application fee upon submission of your completed application. Late fees apply to applications filed less than 90 days in advance of an event. The City does not guarantee any application submitted less than 45 days in advance will be able to be submitted to the City Council for consideration prior to the planned event. Please select from the following table the fee(s) that apply to your application:

_____ $100 Timely application for single new event OR old event with new sponsor
_____ $50 Timely application for repeat of event with same sponsor
_____ $25 For each additional application for new event by the same sponsor
_____ $10 For each additional application for repeat of event with same sponsor
_____ $75 Additional fee for applications filed less than 90 days in advance of an event
_____ $100 Rental Fee for Robinson Plaza or Calanan Park
_____ $100 Cleaning Deposit for use of Robinson Plaza or Calanan Park

$_____ Total Fees

APPLICANT AUTHORIZATION AND INDEMNITY

To the extent allowed by law, Applicant agrees to defend, indemnify, and hold harmless the City of Nevada City, its agents, officials, and employees from and against all claims, damages, losses, injuries, illness, accidents relating to, arising out of, or resulting from, the use of this Special Event Application and the information contained therein, and any resulting Contract.

Applicant acknowledges that the information provided in this Application is true and accurate to the best of Applicant's knowledge and belief.

I have read, understand and agree to comply with all the information provided in the Special Event Application (attached) and any resulting permits and Special Event Contract if approved by the City Council.

Cathy Wiest Casey

Signature of Applicant/Responsible Party

2.27.20

Date

4th of July Parade

A colorful parade in historic downtown Nevada City and the Sierra foothills' largest aerial fireworks display top the 2020 Fourth of July Celebration in Nevada County.

The parade will be Saturday, July 4th at 11am and will include approximately 75 entries. The festive parade makes its way down Broad Street in downtown Nevada City. Parade-goers are advised to bring lawn chairs and arrive early to find a good vantage point.

The Nevada County concert Band performs a curbside pre-parade concert an hour prior to the parade, and continues to provide intermittent music throughout the parade.

Following the parade is a traditional family celebration under the pines at the Nevada County Fairgrounds in Grass Valley. Live music and entertainment, food and refreshments are offered. The fireworks spectacular blasts off at 9:30pm.

Fairgrounds gates open at 3pm and entertainment begins at 4pm.

CITY OF NEVADA CITY
SPECIAL EVENT GUIDELINES

OVERVIEW

Thank you for choosing the City of Nevada City as the location for your event. The City requires the submittal of a Special Event Application as a pre-condition of considering whether to enter into an agreement to grant temporary use of all or any portion of a public street, sidewalk or alley.

Application materials must be completed in full and submitted to the City at least 90 days prior to your event date, and no more than one year in advance of the event date. Applications are accepted on a first-come, first-served basis. A non-refundable application fee must be paid upon submission of your completed application. Use "NA" for "not applicable" to questions or sections that do not apply to your event. Incomplete applications will not be accepted and will delay processing which could affect the availability of your preferred event date or location. Please note the information you provide becomes public information.

City staff review the Application/Contract. Notes from Police, Fire, Public Works and Parks & Recreation will be presented to City Council for consideration. City Council approves or disapproves your Application/Contract at a formal noticed public meeting. Applicants are strongly encouraged to attend the designated City Council meeting in order to discuss their proposed event and answer related questions. Please ensure you have City Council approval before marketing or advertising your event.

EVENT REQUIREMENTS

Alcohol. If alcohol is sold at your event, an Alcohol Permit from California Alcohol Beverage Control (ABC) is required. Please contact ABC at (916) 419-1319.

Amplified Sound. If the event will have amplified sound, applicant is required to have an event staff member responsible for monitoring sound levels to assure compliance with City noise standards when sound/music/noise may be audible beyond the event venue.

Business License. All vendors participating in an event held in Nevada City must obtain a current business license. For information about business license requirements, call City Hall at (530) 265-2496 x100.

Form of Payment. The City accepts payment in the form of cash, personal/business check, money order or cashier's check. Please note there will be a $25 service charge for all returned checks.

Insurance. The applicant and/or the sponsoring organization is required to provide proof of insurance. A current or valid Certificate of General Liability Insurance in the amount of $1,000,000 and an endorsement (CG2026 or equivalent) naming the City of Nevada City as additional insured will be required at least 30 days prior to the event.

Event Notification. An event can change the normal flow of residential and business activity potentially causing a negative impact on the community. As the event organizer, you are responsible for notifying those residents and businesses that are adjacent to the planned closure prior to submission of your Application. Applicants must meet the Event Notification requirements unless the event is sponsored by the Nevada City Chamber of Commerce or has been approved and held annually in the same manner for three or more years. The preferred method of notification is the Requested Special Event Notification Form (Addendum A). Unless otherwise exempt, your application materials must include a signed Notification Certification (Addendum B) confirming adjacent residents and businesses were notified of the planned event.

Parking. Applicants will be required to work with the Nevada City Police Department to facilitate ingress/egress requirements for event participants.

Restrooms. Public restrooms are limited to two for downtown events, one at Robinson Plaza and one in the Commercial Street parking lot. If your event is planned for more than 50 people or in an area away from either public restroom, you may be required to provide restroom accommodations and hand washing facilities for event attendees in the quantity prescribed by the City.

Waste Management/Recycling. You are responsible for properly disposing of all waste and garbage throughout the term of your event, and immediately upon conclusion of the event the area must be returned to a clean condition. Therefore, the City may require the applicant to provide trash and recycling containers if the event involves food or drink vendors. Should cleanup be inadequate or damage to City property occurs, you will be billed at full recovery rates, plus overhead for cleanup and repair.

Runs/Walks/Bicycle. If you put chalk, stickers or other directional markings on streets, sidewalks or trails, these markings must all be removed at the end of your event.

CHECKLIST

Before you submit your application to the City of Nevada City, please make sure you have completed the following steps:

____ Sign AND date your Application/Contract.

____ Attach a detailed event description and additional information as needed

____ Secure required insurance for the event.

____ Include a Notification Certification confirming businesses and residents have been notified of the planned event.

____ Calculate and include the applicable fee.

Submit your completed application to:

City of Nevada City, Attn. Special Event Applications, 317 Broad Street, Nevada City, CA 95959

CITY OF NEVADA CITY
SPECIAL EVENT APPLICATION / CONTRACT

EVENT NAME: SUMMER NIGHTS IN NEVADA CITY JULY 15, 22, 29 2020

EVENT INFORMATION. Please attach a detailed description of your event to this application (e.g. Overall summary, open to the public? How being publicized? Kid/family friendly? Rain or shine? Etc.)

Type of Event (Check all that apply)

___ Parade/Procession ___ Concert ✓ Street Festival/Block Party
___ Run/Walk/Bicycle ___ Fundraiser ___ Other: _____

Has this event been produced before? (Yes) No
Is this an annual event? (Yes) No
Will there be an admission or entry fee? Yes (No)
If yes, fee per adult: $_____ Fee per child: $_____

Event Date(s) JULY 15, 22 & 29 2020

Expected number of:
Attendees 2000 Participants 150 Volunteers 25
Units and floats for parade: _____

Event Hours Start 6pm End 9:30pm
Set-up Date 7/15, 7/22, 7/29 Time 4-6pm
Break Down Date 7/15, 7/22, 7/29 Time 9:30 - 11pm

Names of street(s), sidewalk(s), alley(s) proposed to be closed (Attach additional pages or a map if necessary). Note that it may be necessary to consult with a Police Lieutenant (265-2626) and/or the Public Works Superintendent (265-2496) to accurately identify requested street closures.

_____ between _____ & _____
_____ between _____ & _____

See attached map

Additional Facilities Requested
Event organizers may be asked to complete a Facility Rental Contract with details about use of these additional facilities. Rental fees & cleaning deposits may apply.
___ Robinson Plaza ___ Calanan Park ___ Other: _____

Please note whether your event includes any of the following. If any apply, attach details.

✓ Amplified sound ✓ Concessions ✓ Food Vendors
✓ Stages/Platforms ✓ Food Cooking ✓ Alcohol sales
✓ Tents/Temporary Structures ___ Animals will be present ✓ Temporary Lighting

SUMMER NIGHTS IN NEVADA CITY

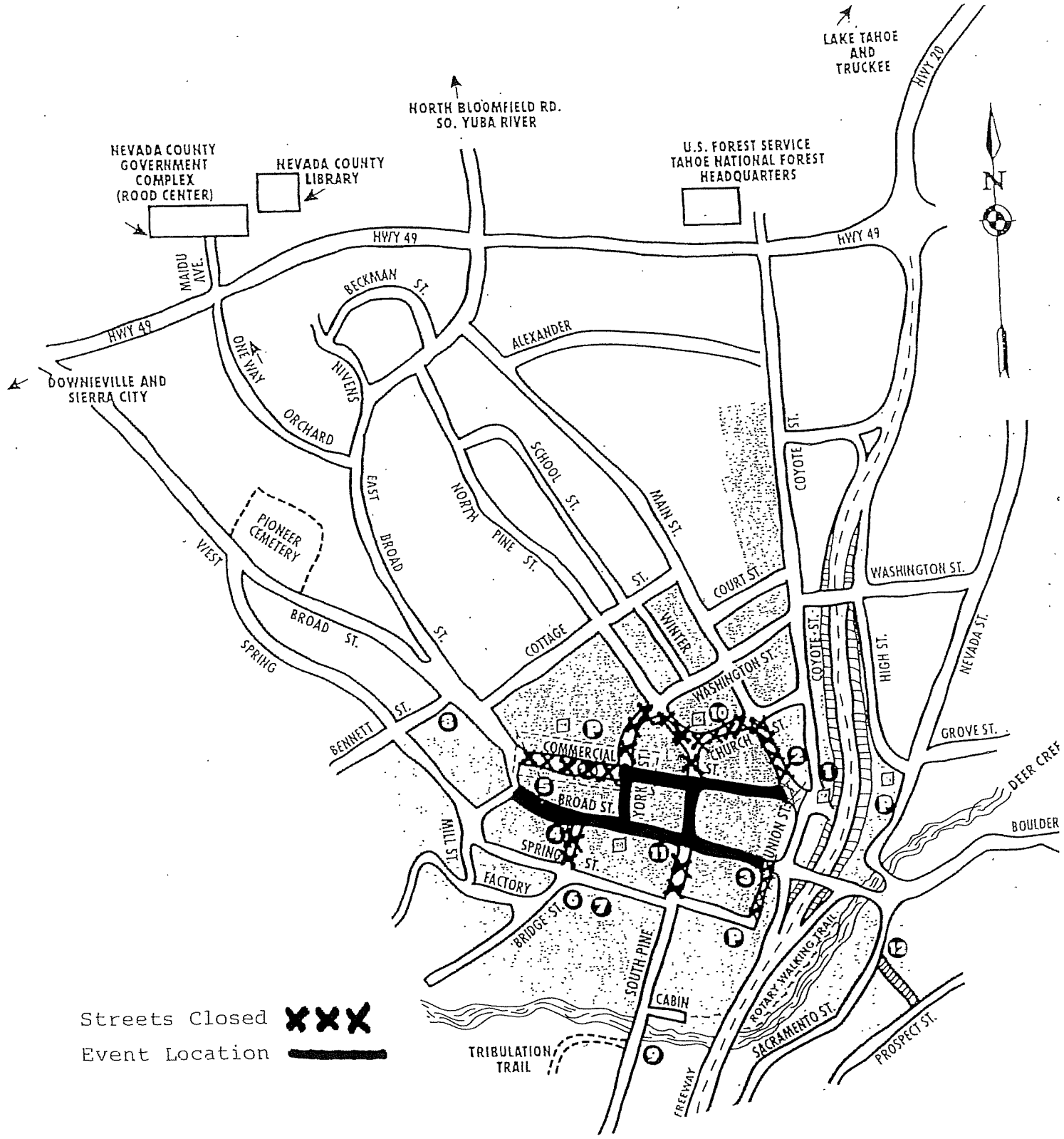

APPLICANT INFORMATION

Sponsoring Organization/Company NEVADA CITY CHAMBER

Name of Applicant/Responsible Party NEVADA CITY CHAMBER

Street Address 132 MAIN ST Apt/Unit/Suite _____

City NEVADA CITY State CA Zip Code 95959

Email info@nevadacitychamber.com

Daytime Phone 530.265.2692 Cell Phone _____

Does the sponsoring organization have experience producing similar events? Yes / No (Circle One)

Event Contact for Public Information

Name NEVADA CITY CHAMBER Contact Phone 530.265.2692

Email info@nevadacitychamber.com

Website www.nevadacitychamber.com

Day of Event Contact Information

On-site Contact Name CATHY WHITTLESEY

On-site Contact Cell Number 530.913.7064

Day of Event ALTERNATE Contact Information

On-site Contact Name CINDY MOON

On-site Contact Cell Number 530.263.4613

APPLICATION FEES

The City requires the payment of a non-refundable application fee upon submission of your completed application. Late fees apply to applications filed less than 90 days in advance of an event. The City does not guarantee any application submitted less than 45 days in advance will be able to be submitted to the City Council for consideration prior to the planned event. Please select from the following table the fee(s) that apply to your application:

_____ $100 Timely application for single new event OR old event with new sponsor
_____ $50 Timely application for repeat of event with same sponsor
_____ $25 For each additional application for new event by the same sponsor
_____ $10 For each additional application for repeat of event with same sponsor
_____ $75 Additional fee for applications filed less than 90 days in advance of an event
_____ $100 Rental Fee for Robinson Plaza or Calanan Park
_____ $100 Cleaning Deposit for use of Robinson Plaza or Calanan Park

$_____ Total Fees

APPLICANT AUTHORIZATION AND INDEMNITY

To the extent allowed by law, Applicant agrees to defend, indemnify, and hold harmless the City of Nevada City, its agents, officials, and employees from and against all claims, damages, losses, injuries, illness, accidents relating to, arising out of, or resulting from, the use of this Special Event Application and the information contained therein, and any resulting Contract.

Applicant acknowledges that the information provided in this Application is true and accurate to the best of Applicant's knowledge and belief.

I have read, understand and agree to comply with all the information provided in the Special Event Application (attached) and any resulting permits and Special Event Contract if approved by the City Council.

Cathy DuHlosey

Signature of Applicant/Responsible Party

2.27.20

Date

CITY OF NEVADA CITY
SPECIAL EVENT GUIDELINES

OVERVIEW

Thank you for choosing the City of Nevada City as the location for your event. The City requires the submittal of a Special Event Application as a pre-condition of considering whether to enter into an agreement to grant temporary use of all or any portion of a public street, sidewalk or alley.

Application materials must be completed in full and submitted to the City at least 90 days prior to your event date, and no more than one year in advance of the event date. Applications are accepted on a first-come, first-served basis. A non-refundable application fee must be paid upon submission of your completed application. Use "NA" for "not applicable" to questions or sections that do not apply to your event. Incomplete applications will not be accepted and will delay processing which could affect the availability of your preferred event date or location. Please note the information you provide becomes public information.

City staff review the Application/Contract. Notes from Police, Fire, Public Works and Parks & Recreation will be presented to City Council for consideration. City Council approves or disapproves your Application/Contract at a formal noticed public meeting. Applicants are strongly encouraged to attend the designated City Council meeting in order to discuss their proposed event and answer related questions. Please ensure you have City Council approval before marketing or advertising your event.

EVENT REQUIREMENTS

Alcohol. If alcohol is sold at your event, an Alcohol Permit from California Alcohol Beverage Control (ABC) is required. Please contact ABC at (916) 419-1319.

Amplified Sound. If the event will have amplified sound, applicant is required to have an event staff member responsible for monitoring sound levels to assure compliance with City noise standards when sound/music/noise may be audible beyond the event venue.

Business License. All vendors participating in an event held in Nevada City must obtain a current business license. For information about business license requirements, call City Hall at (530) 265-2496 x100.

Form of Payment. The City accepts payment in the form of cash, personal/business check, money order or cashier's check. Please note there will be a $25 service charge for all returned checks.

Insurance. The applicant and/or the sponsoring organization is required to provide proof of insurance. A current or valid Certificate of General Liability Insurance in the amount of $1,000,000 and an endorsement (CG2026 or equivalent) naming the City of Nevada City as additional insured will be required at least 30 days prior to the event.

Event Notification. An event can change the normal flow of residential and business activity potentially causing a negative impact on the community. As the event organizer, you are responsible for notifying those residents and businesses that are adjacent to the planned closure prior to submission of your Application. Applicants must meet the Event Notification requirements unless the event is sponsored by the Nevada City Chamber of Commerce or has been approved and held annually in the same manner for three or more years. The preferred method of notification is the Requested Special Event Notification Form (Addendum A). Unless otherwise exempt, your application materials must include a signed Notification Certification (Addendum B) confirming adjacent residents and businesses were notified of the planned event.

Parking. Applicants will be required to work with the Nevada City Police Department to facilitate ingress/egress requirements for event participants.

Restrooms. Public restrooms are limited to two for downtown events, one at Robinson Plaza and one in the Commercial Street parking lot. If your event is planned for more than 50 people or in an area away from either public restroom, you may be required to provide restroom accommodations and hand washing facilities for event attendees in the quantity prescribed by the City.

Waste Management/Recycling. You are responsible for properly disposing of all waste and garbage throughout the term of your event, and immediately upon conclusion of the event the area must be returned to a clean condition. Therefore, the City may require the applicant to provide trash and recycling containers if the event involves food or drink vendors. Should cleanup be inadequate or damage to City property occurs, you will be billed at full recovery rates, plus overhead for cleanup and repair.

Runs/Walks/Bicycle. If you put chalk, stickers or other directional markings on streets, sidewalks or trails, these markings must all be removed at the end of your event.

CHECKLIST

Before you submit your application to the City of Nevada City, please make sure you have completed the following steps:

___ Sign AND date your Application/Contract.

___ Attach a detailed event description and additional information as needed

___ Secure required insurance for the event.

___ Include a Notification Certification confirming businesses and residents have been notified of the planned event.

___ Calculate and include the applicable fee.

Submit your completed application to:

City of Nevada City, Attn. Special Event Applications, 317 Broad Street, Nevada City, CA 95959

Summer Nights In Nevada City

The Annual Summer Nights in Nevada City celebration, an outdoor festival of art and music, will be held three Wednesday evenings, July 15, 22 and 29, 2020 in this colorful Northern Sierra foothills town.

During Summer Nights, Nevada City's landmark historic district is closed to motorized traffic and filled with arts, crafts, classic cars, food, drink and music. Leading Sierra foothills musicians perform on outdoor stages throughout the downtown area. Hours are 6-9:30 p.m. There is no admission charge.

Three Wednesday nights in July — the best FREE entertainment for the whole family!

The 2020 Summer Nights in Nevada City will be similar to the 2019 event.

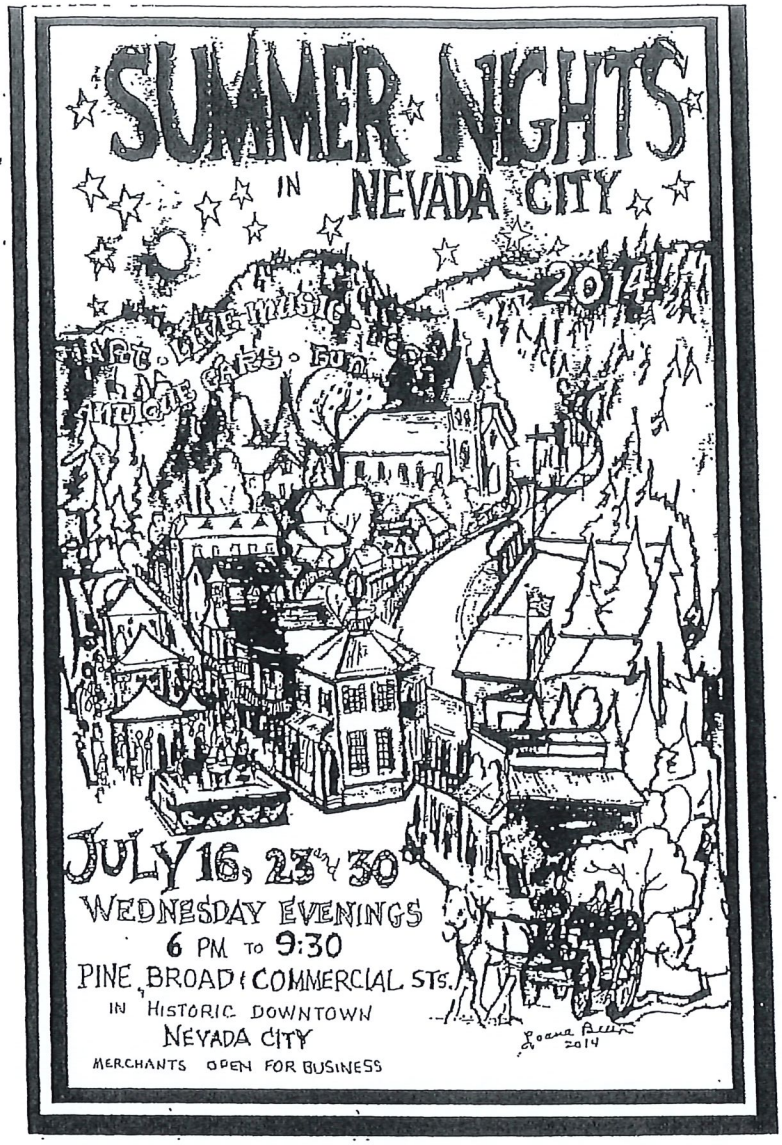

Fantastic Entertainment Pedestrians Only

Nevada City Chamber of Commerce
Invites you to the:

2014 Summer Nights Nevada City

6 p.m. to 9:30 p.m.

July 16th

* Bob Mora * John Girton
* Dream & the Dreamer * David Ayala
* Troupe Al Ama * Achilles Wheel

July 23rd

* No Taboo * Runnin 4 Cover
* Troupe Al Ama * Ivan Najera & Friends
* The Nut Boyz * David Ayala

July 30th

* Lorraine Gervais * Then Again
* George Souza * Troupe Al Ama
* David Ayala * Star People

Growers Market & Fine Art on Broad Street
Food Court - Classic Cars - Kids Activities
www.nevadacitychamber.com
1-800-655-NJOY

Fun for all Ages On the Streets of Nevada City

Bounce House, Face Painting, Balloons, Food & Drink

$5 Parking and Shuttle Service from Nevada County Gov. Center

Illustration by Loana Beeson, Nevada City

CITY OF NEVADA CITY
SPECIAL EVENT APPLICATION / CONTRACT

EVENT NAME: CONSTITUTION DAY CONCERT SEPT 19th 2020

EVENT INFORMATION. Please attach a detailed description of your event to this application (e.g. Overall summary, open to the public? How being publicized? Kid/family friendly? Rain or shine? Etc.)

Type of Event (Check all that apply)

___ Parade/Procession X Concert ___ Street Festival/Block Party
___ Run/Walk/Bicycle ___ Fundraiser ___ Other: _____

Has this event been produced before? (Yes) No
Is this an annual event? (Yes) No
Will there be an admission or entry fee? Yes (No)
If yes, fee per adult: $_____ Fee per child: $_____

Event Date(s) SEPTEMBER 19th 2020

Expected number of:
Attendees 100 Participants 80 Volunteers 6
Units and floats for parade: _____

Event Hours Start 4:00pm End 6:30pm
Set-up Date 9.19.20 Time 3:00 – 4:00pm
Break Down Date 9.19.20 Time 6:30 – 8pm

Names of street(s), sidewalk(s), alley(s) proposed to be closed (Attach additional pages or a map if necessary). Note that it may be necessary to consult with a Police Lieutenant (265-2626) and/or the Public Works Superintendent (265-2496) to accurately identify requested street closures.

_____ between _____ & _____
_____ between _____ & _____

See attached map

Additional Facilities Requested
Event organizers may be asked to complete a Facility Rental Contract with details about use of these additional facilities. Rental fees & cleaning deposits may apply.
___ Robinson Plaza ___ Calanan Park ___ Other: _____

Please note whether your event includes any of the following. If any apply, attach details.
___ Amplified sound ___ Concessions ___ Food Vendors
___ Stages/Platforms ___ Food Cooking ___ Alcohol sales
___ Tents/Temporary Structures ___ Animals will be present ___ Temporary Lighting

CONSTITUTION DAY CONCEPT

SATURDAY

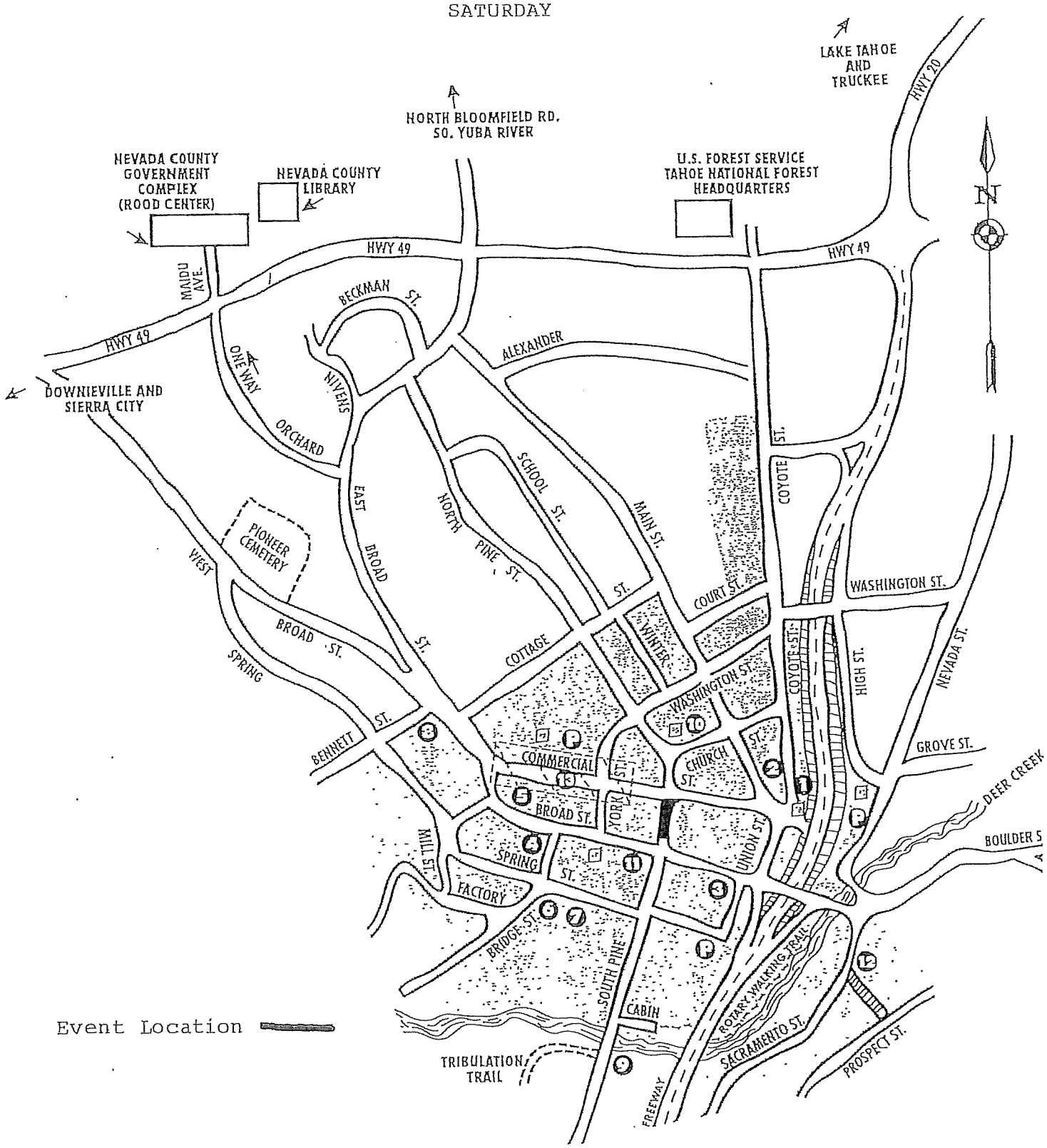

Constitution Day Concert

Free Outdoor Concert in Downtown Nevada City – Nevada County Concert Band on Pine Street, Downtown Nevada City, 4-6:30pm

APPLICANT INFORMATION

Sponsoring Organization/Company CITY OF NEVADA CITY & NEVADA LODGE #13

Name of Applicant/Responsible Party CATHY WHITTLESEY

Street Address 108½ N. PINE ST Apt/Unit/Suite _____

City NEVADA CITY State CA Zip Code 95959

Email _____

Daytime Phone _____ Cell Phone _____

Does the sponsoring organization have experience producing similar events? Yes / No (Circle One)

Event Contact for Public Information

Name NEVADA CITY CHAMBER Contact Phone 530.265.2692

Email info@nevadacitychamber.com

Website www.nevadacitychamber.com

Day of Event Contact Information

On-site Contact Name CATHY WHITTLESEY

On-site Contact Cell Number 530.913.7064

Day of Event ALTERNATE Contact Information

On-site Contact Name _____

On-site Contact Cell Number _____

APPLICATION FEES

The City requires the payment of a non-refundable application fee upon submission of your completed application. Late fees apply to applications filed less than 90 days in advance of an event. The City does not guarantee any application submitted less than 45 days in advance will be able to be submitted to the City Council for consideration prior to the planned event. Please select from the following table the fee(s) that apply to your application:

_____ $100 Timely application for single new event OR old event with new sponsor
_____ $50 Timely application for repeat of event with same sponsor
_____ $25 For each additional application for new event by the same sponsor
_____ $10 For each additional application for repeat of event with same sponsor
_____ $75 Additional fee for applications filed less than 90 days in advance of an event
_____ $100 Rental Fee for Robinson Plaza or Calanan Park
_____ $100 Cleaning Deposit for use of Robinson Plaza or Calanan Park

$_____ **Total Fees**

APPLICANT AUTHORIZATION AND INDEMNITY

To the extent allowed by law, Applicant agrees to defend, indemnify, and hold harmless the City of Nevada City, its agents, officials, and employees from and against all claims, damages, losses, injuries, illness, accidents relating to, arising out of, or resulting from, the use of this Special Event Application and the information contained therein, and any resulting Contract.

Applicant acknowledges that the information provided in this Application is true and accurate to the best of Applicant's knowledge and belief.

I have read, understand and agree to comply with all the information provided in the Special Event Application (attached) and any resulting permits and Special Event Contract if approved by the City Council.

Cathy Whitlesey

Signature of Applicant/Responsible Party

2.27.20

Date

CITY OF NEVADA CITY
SPECIAL EVENT GUIDELINES

OVERVIEW

Thank you for choosing the City of Nevada City as the location for your event. The City requires the submittal of a Special Event Application as a pre-condition of considering whether to enter into an agreement to grant temporary use of all or any portion of a public street, sidewalk or alley.

Application materials must be completed in full and submitted to the City at least 90 days prior to your event date, and no more than one year in advance of the event date. Applications are accepted on a first-come, first-served basis. A non-refundable application fee must be paid upon submission of your completed application. Use "NA" for "not applicable" to questions or sections that do not apply to your event. Incomplete applications will not be accepted and will delay processing which could affect the availability of your preferred event date or location. Please note the information you provide becomes public information.

City staff review the Application/Contract. Notes from Police, Fire, Public Works and Parks & Recreation will be presented to City Council for consideration. City Council approves or disapproves your Application/Contract at a formal noticed public meeting. Applicants are strongly encouraged to attend the designated City Council meeting in order to discuss their proposed event and answer related questions. Please ensure you have City Council approval before marketing or advertising your event.

EVENT REQUIREMENTS

Alcohol. If alcohol is sold at your event, an Alcohol Permit from California Alcohol Beverage Control (ABC) is required. Please contact ABC at (916) 419-1319.

Amplified Sound. If the event will have amplified sound, applicant is required to have an event staff member responsible for monitoring sound levels to assure compliance with City noise standards when sound/music/noise may be audible beyond the event venue.

Business License. All vendors participating in an event held in Nevada City must obtain a current business license. For information about business license requirements, call City Hall at (530) 265-2496 x100.

Form of Payment. The City accepts payment in the form of cash, personal/business check, money order or cashier's check. Please note there will be a $25 service charge for all returned checks.

Insurance. The applicant and/or the sponsoring organization is required to provide proof of insurance. A current or valid Certificate of General Liability Insurance in the amount of $1,000,000 and an endorsement (CG2026 or equivalent) naming the City of Nevada City as additional insured will be required at least 30 days prior to the event.

Event Notification. An event can change the normal flow of residential and business activity potentially causing a negative impact on the community. As the event organizer, you are responsible for notifying those residents and businesses that are adjacent to the planned closure prior to submission of your Application. Applicants must meet the Event Notification requirements unless the event is sponsored by the Nevada City Chamber of Commerce or has been approved and held annually in the same manner for three or more years. The preferred method of notification is the Requested Special Event Notification Form (Addendum A). Unless otherwise exempt, your application materials must include a signed Notification Certification (Addendum B) confirming adjacent residents and businesses were notified of the planned event.

Parking. Applicants will be required to work with the Nevada City Police Department to facilitate ingress/egress requirements for event participants.

Restrooms. Public restrooms are limited to two for downtown events, one at Robinson Plaza and one in the Commercial Street parking lot. If your event is planned for more than 50 people or in an area away from either public restroom, you may be required to provide restroom accommodations and hand washing facilities for event attendees in the quantity prescribed by the City.

Waste Management/Recycling. You are responsible for properly disposing of all waste and garbage throughout the term of your event, and immediately upon conclusion of the event the area must be returned to a clean condition. Therefore, the City may require the applicant to provide trash and recycling containers if the event involves food or drink vendors. Should cleanup be inadequate or damage to City property occurs, you will be billed at full recovery rates, plus overhead for cleanup and repair.

Runs/Walks/Bicycle. If you put chalk, stickers or other directional markings on streets, sidewalks or trails, these markings must all be removed at the end of your event.

CHECKLIST

Before you submit your application to the City of Nevada City, please make sure you have completed the following steps:

____ Sign AND date your Application/Contract.

____ Attach a detailed event description and additional information as needed

____ Secure required insurance for the event.

____ Include a Notification Certification confirming businesses and residents have been notified of the planned event.

____ Calculate and include the applicable fee.

Submit your completed application to:

City of Nevada City, Attn. Special Event Applications, 317 Broad Street, Nevada City, CA 95959

CITY OF NEVADA CITY
SPECIAL EVENT APPLICATION / CONTRACT

EVENT NAME: CONSTITUTION DAY PARADE SEPT 20, 2020

EVENT INFORMATION. Please attach a detailed description of your event to this application (e.g. Overall summary, open to the public? How being publicized? Kid/family friendly? Rain or shine? Etc.)

Type of Event (Check all that apply)

✓ Parade/Procession ___ Concert ___ Street Festival/Block Party
___ Run/Walk/Bicycle ___ Fundraiser ___ Other: _____

Has this event been produced before? (Yes) No
Is this an annual event? (Yes) No
Will there be an admission or entry fee? Yes (No)
If yes, fee per adult: $_____ Fee per child: $_____

Event Date(s) SEPTEMBER 20, 2020

Expected number of:
Attendees 1000 Participants 200 Volunteers 20
Units and floats for parade: _____

Event Hours Start 2:00pm End 4:00pm
Set-up Date 9.20.20 Time 12:15-2:00pm
Break Down Date 9.20.20 Time 3:00-4:30pm

Names of street(s), sidewalk(s), alley(s) proposed to be closed (Attach additional pages or a map if necessary). Note that it may be necessary to consult with a Police Lieutenant (265-2626) and/or the Public Works Superintendent (265-2496) to accurately identify requested street closures.

_____ between _____ & _____
_____ between _____ & _____

See attached map

Additional Facilities Requested
Event organizers may be asked to complete a Facility Rental Contract with details about use of these additional facilities. Rental fees & cleaning deposits may apply.
___ Robinson Plaza ___ Calanan Park ___ Other: _____

Please note whether your event includes any of the following. If any apply, attach details.

✓ Amplified sound ✓ Concessions ___ Food Vendors
___ Stages/Platforms ___ Food Cooking ___ Alcohol sales
___ Tents/Temporary Structures ___ Animals will be present ___ Temporary Lighting

APPLICANT INFORMATION

Sponsoring Organization/Company NEVADA CITY CHAMBER

Name of Applicant/Responsible Party NEVADA CITY CHAMBER

Street Address 132 MAIN ST Apt/Unit/Suite _____

City NEVADA CITY State CA Zip Code 95959

Email info@nevadacitychamber.com

Daytime Phone 530.265.2692 Cell Phone _____

Does the sponsoring organization have experience producing similar events? Yes / No (Circle One)

Event Contact for Public Information

Name NEVADA CITY CHAMBER Contact Phone 530.265.2692

Email info@nevadacitychamber.com

Website www.nevadacitychamber.com

Day of Event Contact Information

On-site Contact Name CATHY WHITTLESEY

On-site Contact Cell Number 530.913.7064

Day of Event ALTERNATE Contact Information

On-site Contact Name CINDY MOON

On-site Contact Cell Number 530.263.4613

APPLICATION FEES

The City requires the payment of a non-refundable application fee upon submission of your completed application. Late fees apply to applications filed less than 90 days in advance of an event. The City does not guarantee any application submitted less than 45 days in advance will be able to be submitted to the City Council for consideration prior to the planned event. Please select from the following table the fee(s) that apply to your application:

_____ $100 Timely application for single new event OR old event with new sponsor
_____ $50 Timely application for repeat of event with same sponsor
_____ $25 For each additional application for new event by the same sponsor
_____ $10 For each additional application for repeat of event with same sponsor
_____ $75 Additional fee for applications filed less than 90 days in advance of an event
_____ $100 Rental Fee for Robinson Plaza or Calanan Park
_____ $100 Cleaning Deposit for use of Robinson Plaza or Calanan Park

$_____ **Total Fees**

APPLICANT AUTHORIZATION AND INDEMNITY

To the extent allowed by law, Applicant agrees to defend, indemnify, and hold harmless the City of Nevada City, its agents, officials, and employees from and against all claims, damages, losses, injuries, illness, accidents relating to, arising out of, or resulting from, the use of this Special Event Application and the information contained therein, and any resulting Contract.

Applicant acknowledges that the information provided in this Application is true and accurate to the best of Applicant's knowledge and belief.

I have read, understand and agree to comply with all the information provided in the Special Event Application (attached) and any resulting permits and Special Event Contract if approved by the City Council.

Cathy Duffley — 2.27.20

Signature of Applicant/Responsible Party — *Date*

CITY OF NEVADA CITY
SPECIAL EVENT GUIDELINES

OVERVIEW

Thank you for choosing the City of Nevada City as the location for your event. The City requires the submittal of a Special Event Application as a pre-condition of considering whether to enter into an agreement to grant temporary use of all or any portion of a public street, sidewalk or alley.

Application materials must be completed in full and submitted to the City at least 90 days prior to your event date, and no more than one year in advance of the event date. Applications are accepted on a first-come, first-served basis. A non-refundable application fee must be paid upon submission of your completed application. Use "NA" for "not applicable" to questions or sections that do not apply to your event. Incomplete applications will not be accepted and will delay processing which could affect the availability of your preferred event date or location. Please note the information you provide becomes public information.

City staff review the Application/Contract. Notes from Police, Fire, Public Works and Parks & Recreation will be presented to City Council for consideration. City Council approves or disapproves your Application/Contract at a formal noticed public meeting. Applicants are strongly encouraged to attend the designated City Council meeting in order to discuss their proposed event and answer related questions. Please ensure you have City Council approval before marketing or advertising your event.

EVENT REQUIREMENTS

Alcohol. If alcohol is sold at your event, an Alcohol Permit from California Alcohol Beverage Control (ABC) is required. Please contact ABC at (916) 419-1319.

Amplified Sound. If the event will have amplified sound, applicant is required to have an event staff member responsible for monitoring sound levels to assure compliance with City noise standards when sound/music/noise may be audible beyond the event venue.

Business License. All vendors participating in an event held in Nevada City must obtain a current business license. For information about business license requirements, call City Hall at (530) 265-2496 x100.

Form of Payment. The City accepts payment in the form of cash, personal/business check, money order or cashier's check. Please note there will be a $25 service charge for all returned checks.

Insurance. The applicant and/or the sponsoring organization is required to provide proof of insurance. A current or valid Certificate of General Liability Insurance in the amount of $1,000,000 and an endorsement (CG2026 or equivalent) naming the City of Nevada City as additional insured will be required at least 30 days prior to the event.

Event Notification. An event can change the normal flow of residential and business activity potentially causing a negative impact on the community. As the event organizer, you are responsible for notifying those residents and businesses that are adjacent to the planned closure prior to submission of your Application. Applicants must meet the Event Notification requirements unless the event is sponsored by the Nevada City Chamber of Commerce or has been approved and held annually in the same manner for three or more years. The preferred method of notification is the Requested Special Event Notification Form (Addendum A). Unless otherwise exempt, your application materials must include a signed Notification Certification (Addendum B) confirming adjacent residents and businesses were notified of the planned event.

Parking. Applicants will be required to work with the Nevada City Police Department to facilitate ingress/egress requirements for event participants.

Restrooms. Public restrooms are limited to two for downtown events, one at Robinson Plaza and one in the Commercial Street parking lot. If your event is planned for more than 50 people or in an area away from either public restroom, you may be required to provide restroom accommodations and hand washing facilities for event attendees in the quantity prescribed by the City.

Waste Management/Recycling. You are responsible for properly disposing of all waste and garbage throughout the term of your event, and immediately upon conclusion of the event the area must be returned to a clean condition. Therefore, the City may require the applicant to provide trash and recycling containers if the event involves food or drink vendors. Should cleanup be inadequate or damage to City property occurs, you will be billed at full recovery rates, plus overhead for cleanup and repair.

Runs/Walks/Bicycle. If you put chalk, stickers or other directional markings on streets, sidewalks or trails, these markings must all be removed at the end of your event.

CHECKLIST

Before you submit your application to the City of Nevada City, please make sure you have completed the following steps:

___ Sign AND date your Application/Contract.

___ Attach a detailed event description and additional information as needed

___ Secure required insurance for the event.

___ Include a Notification Certification confirming businesses and residents have been notified of the planned event.

___ Calculate and include the applicable fee.

Submit your completed application to:

City of Nevada City, Attn. Special Event Applications, 317 Broad Street, Nevada City, CA 95959

CONSTITUTION DAY PARADE

SUNDAY

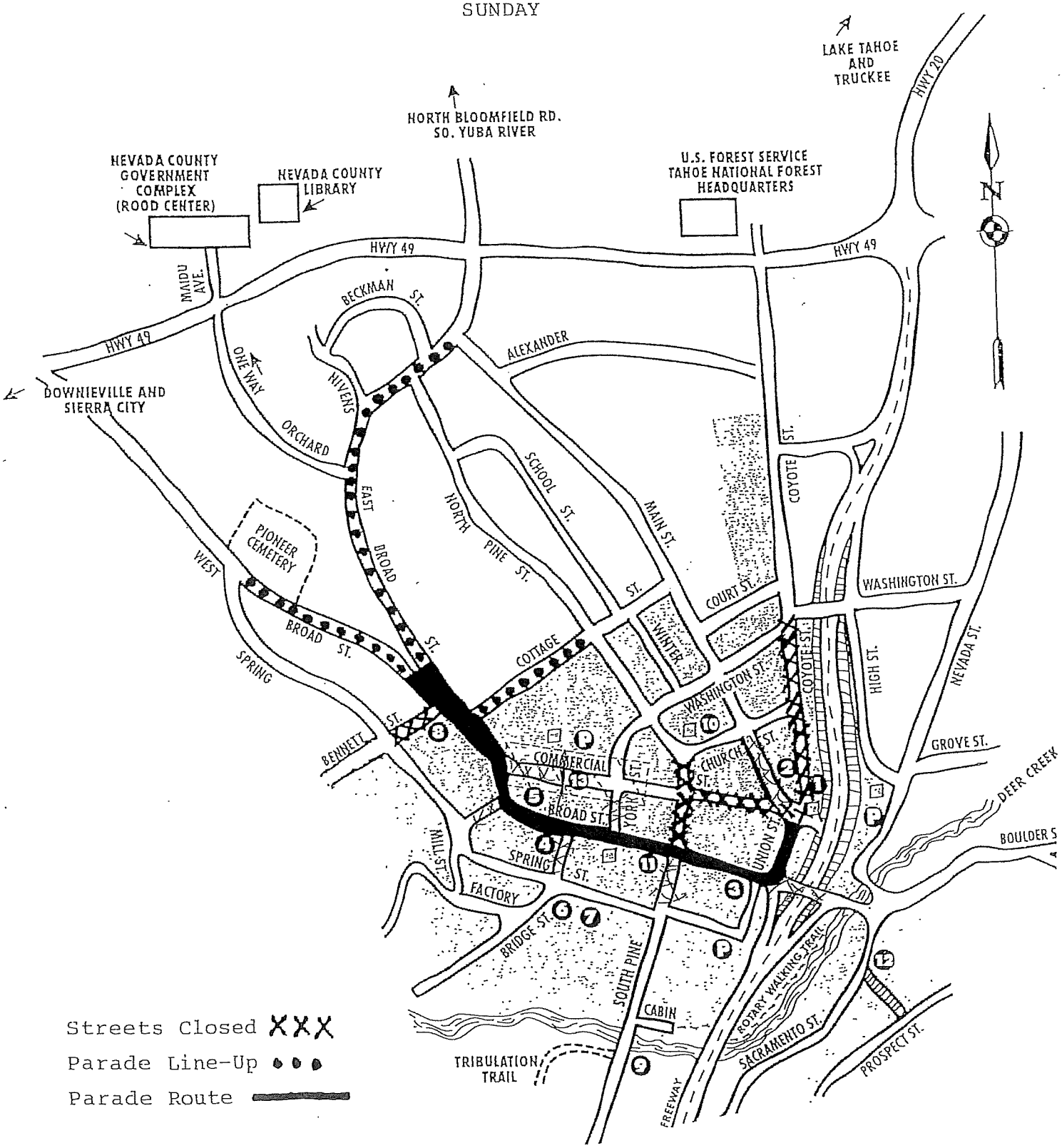

APPLICANT INFORMATION

Sponsoring Organization/Company CITY OF NEVADA CITY & NEVADA LODGE #13

Name of Applicant/Responsible Party CATHY WHITTLESEY

Street Address 108½ N. PINE ST. Apt/Unit/Suite _____

City NEVADA CITY State CA Zip Code 95959

Email _____

Daytime Phone _____ Cell Phone _____

Does the sponsoring organization have experience producing similar events? Yes / No (Circle One)

Event Contact for Public Information

Name NEVADA CITY CHAMBER Contact Phone 530.265.2692

Email info@nevadacitychamber.com

Website www.nevadacitychamber.com

Day of Event Contact Information

On-site Contact Name CATHY WHITTLESEY

On-site Contact Cell Number 530.913.7064

Day of Event ALTERNATE Contact Information

On-site Contact Name _____

On-site Contact Cell Number _____

APPLICATION FEES

The City requires the payment of a non-refundable application fee upon submission of your completed application. Late fees apply to applications filed less than 90 days in advance of an event. The City does not guarantee any application submitted less than 45 days in advance will be able to be submitted to the City Council for consideration prior to the planned event. Please select from the following table the fee(s) that apply to your application:

_____ $100 Timely application for single new event OR old event with new sponsor
_____ $50 Timely application for repeat of event with same sponsor
_____ $25 For each additional application for new event by the same sponsor
_____ $10 For each additional application for repeat of event with same sponsor
_____ $75 Additional fee for applications filed less than 90 days in advance of an event
_____ $100 Rental Fee for Robinson Plaza or Calanan Park
_____ $100 Cleaning Deposit for use of Robinson Plaza or Calanan Park

$_____ Total Fees

APPLICANT AUTHORIZATION AND INDEMNITY

To the extent allowed by law, Applicant agrees to defend, indemnify, and hold harmless the City of Nevada City, its agents, officials, and employees from and against all claims, damages, losses, injuries, illness, accidents relating to, arising out of, or resulting from, the use of this Special Event Application and the information contained therein, and any resulting Contract.

Applicant acknowledges that the information provided in this Application is true and accurate to the best of Applicant's knowledge and belief.

I have read, understand and agree to comply with all the information provided in the Special Event Application (attached) and any resulting permits and Special Event Contract if approved by the City Council.

Cathy Duffley — 2.27.20

Signature of Applicant/Responsible Party — *Date*

Constitution Day Parade

The 54th Annual Constitution Day Parade tops a weekend of festivities September 19 & 20, 2020 in this historic California Gold Rush town.

Nevada City's Constitution Day Parade has been a local tradition since 1967 and is reported to be the oldest and largest Constitution observance in western America.

The 2pm Sunday parade features more than 50 to 60 entries and culminates other activities including Revolutionary War Living History in Pioneer Park, the Gold Country Duck Race on Deer Creek.

The parade through the downtown historic district includes marching bands, floats, antique autos, equestrians, politicians and perennial crowd favorites such as the Famous Marching Presidents of Nevada City, a humorous but reverent group that portrays each U.S. President, the Ben Ali Shriners and all the local school bands.

CITY OF NEVADA CITY
SPECIAL EVENT GUIDELINES

OVERVIEW

Thank you for choosing the City of Nevada City as the location for your event. The City requires the submittal of a Special Event Application as a pre-condition of considering whether to enter into an agreement to grant temporary use of all or any portion of a public street, sidewalk or alley.

Application materials must be completed in full and submitted to the City at least 90 days prior to your event date, and no more than one year in advance of the event date. Applications are accepted on a first-come, first-served basis. A non-refundable application fee must be paid upon submission of your completed application. Use "NA" for "not applicable" to questions or sections that do not apply to your event. Incomplete applications will not be accepted and will delay processing which could affect the availability of your preferred event date or location. Please note the information you provide becomes public information.

City staff review the Application/Contract. Notes from Police, Fire, Public Works and Parks & Recreation will be presented to City Council for consideration. City Council approves or disapproves your Application/Contract at a formal noticed public meeting. Applicants are strongly encouraged to attend the designated City Council meeting in order to discuss their proposed event and answer related questions. Please ensure you have City Council approval before marketing or advertising your event.

EVENT REQUIREMENTS

Alcohol. If alcohol is sold at your event, an Alcohol Permit from California Alcohol Beverage Control (ABC) is required. Please contact ABC at (916) 419-1319.

Amplified Sound. If the event will have amplified sound, applicant is required to have an event staff member responsible for monitoring sound levels to assure compliance with City noise standards when sound/music/noise may be audible beyond the event venue.

Business License. All vendors participating in an event held in Nevada City must obtain a current business license. For information about business license requirements, call City Hall at (530) 265-2496 x100.

Form of Payment. The City accepts payment in the form of cash, personal/business check, money order or cashier's check. Please note there will be a $25 service charge for all returned checks.

Insurance. The applicant and/or the sponsoring organization is required to provide proof of insurance. A current or valid Certificate of General Liability Insurance in the amount of $1,000,000 and an endorsement (CG2026 or equivalent) naming the City of Nevada City as additional insured will be required at least 30 days prior to the event.

Event Notification. An event can change the normal flow of residential and business activity potentially causing a negative impact on the community. As the event organizer, you are responsible for notifying those residents and businesses that are adjacent to the planned closure prior to submission of your Application. Applicants must meet the Event Notification requirements unless the event is sponsored by the Nevada City Chamber of Commerce or has been approved and held annually in the same manner for three or more years. The preferred method of notification is the Requested Special Event Notification Form (Addendum A). Unless otherwise exempt, your application materials must include a signed Notification Certification (Addendum B) confirming adjacent residents and businesses were notified of the planned event.

Parking. Applicants will be required to work with the Nevada City Police Department to facilitate ingress/egress requirements for event participants.

Restrooms. Public restrooms are limited to two for downtown events, one at Robinson Plaza and one in the Commercial Street parking lot. If your event is planned for more than 50 people or in an area away from either public restroom, you may be required to provide restroom accommodations and hand washing facilities for event attendees in the quantity prescribed by the City.

Waste Management/Recycling. You are responsible for properly disposing of all waste and garbage throughout the term of your event, and immediately upon conclusion of the event the area must be returned to a clean condition. Therefore, the City may require the applicant to provide trash and recycling containers if the event involves food or drink vendors. Should cleanup be inadequate or damage to City property occurs, you will be billed at full recovery rates, plus overhead for cleanup and repair.

Runs/Walks/Bicycle. If you put chalk, stickers or other directional markings on streets, sidewalks or trails, these markings must all be removed at the end of your event.

CHECKLIST

Before you submit your application to the City of Nevada City, please make sure you have completed the following steps:

___ Sign AND date your Application/Contract.

___ Attach a detailed event description and additional information as needed

___ Secure required insurance for the event.

___ Include a Notification Certification confirming businesses and residents have been notified of the planned event.

___ Calculate and include the applicable fee.

Submit your completed application to:

City of Nevada City, Attn. Special Event Applications, 317 Broad Street, Nevada City, CA 95959

CITY OF NEVADA CITY

SPECIAL EVENT APPLICATION / CONTRACT

EVENT NAME: VICTORIAN CHRISTMAS SUNDAYS DEC 6, 13 & 20, 2020 WEDNESDAYS DEC 16 & 23, 2020

EVENT INFORMATION. Please attach a detailed description of your event to this application (e.g. Overall summary, open to the public? How being publicized? Kid/family friendly? Rain or shine? Etc.)

Type of Event (Check all that apply)

___ Parade/Procession ___ Concert ✓ Street Festival/Block Party
___ Run/Walk/Bicycle ___ Fundraiser ___ Other: _____

Has this event been produced before? (Yes) No
Is this an annual event? (Yes) No
Will there be an admission or entry fee? Yes (No)
If yes, fee per adult: $_____ Fee per child: $_____

Event Date(s) SUNDAYS DEC 6, 13 & 20, 2020 WEDNESDAYS DEC 16 & 23, 2020

Expected number of:
Attendees 2000 Participants 125 Volunteers 25
Units and floats for parade: _____

Event Hours Start SUNDAY 1:30pm WED 5:00pm End 6:00pm 9:00pm

Set-up Date SUNDAY WED Time 12:15 - 1:30pm 4:00 - 5:00pm

Break Down Date SUNDAY WED Time 6 - 7:30pm 9 - 10:30pm

Names of street(s), sidewalk(s), alley(s) proposed to be closed (Attach additional pages or a map if necessary). Note that it may be necessary to consult with a Police Lieutenant (265-2626) and/or the Public Works Superintendent (265-2496) to accurately identify requested street closures.

_____ between _____ & _____
_____ between _____ & _____

See attached map

Additional Facilities Requested

Event organizers may be asked to complete a Facility Rental Contract with details about use of these additional facilities. Rental fees & cleaning deposits may apply.

___ Robinson Plaza ___ Calanan Park ___ Other: _____

Please note whether your event includes any of the following. If any apply, attach details.

___ Amplified sound ✓ Concessions ✓ Food Vendors
✓ Stages/Platforms ✓ Food Cooking ✓ Alcohol sales
✓ Tents/Temporary Structures ___ Animals will be present ✓ Temporary Lighting

VICTORIAN CHRISTMAS

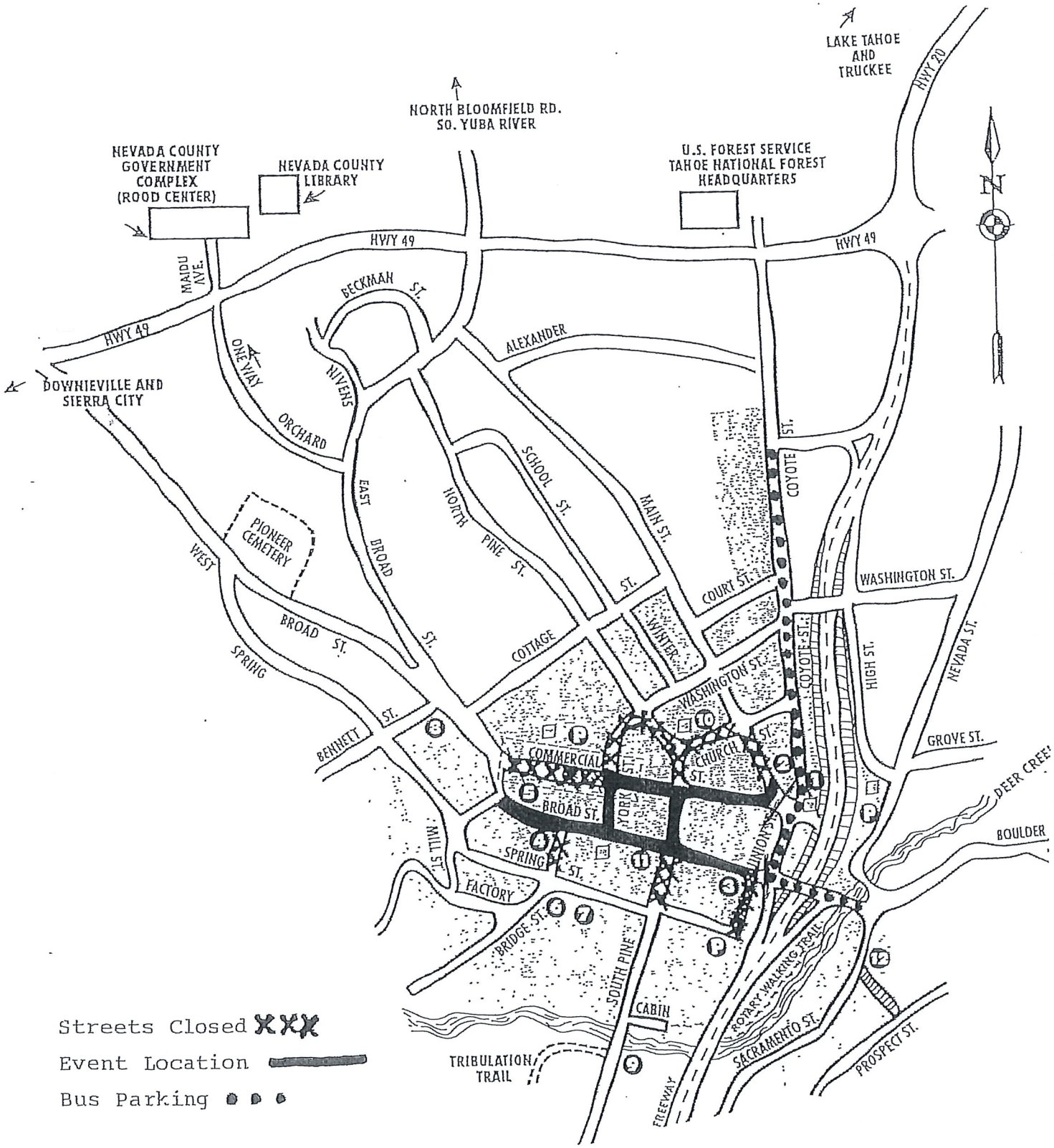

Victorian Christmas

The enticing aromas of roasted chestnuts and hearty holiday foods fill the air, along with cries of street vendors hawking their wares and lamp-lit streets filled to overflowing with authentic Christmas treasures — hand-crafted candy, jewelry, pottery, perfume, dolls, and over 100 different items in all. It's the one & only Victorian Christmas-full of new shows, sights, sounds and attractions.

Welcome the holiday season in style in historic Nevada City, a quaint, Gold Rush town nestled in the foothills of the snow-capped Sierra where each year the town's picturesque downtown transforms into a genuine Christmas card come to life. It's a magical setting of hilly streets outlined with twinkling white lights and authentic gas lamps, wandering minstrels and carolers dressed in Victorian attire, and a myriad of visitors sharing holiday cheer and good tidings.

This annual, family tradition takes place 2 Wednesday evenings and 3 Sunday afternoons in December and features holiday activities for all ages: live entertainment, savory yuletide treats and libations, and of course, Father Christmas!

2018 Victorian CHRISTMAS

Nevada City, California

Romance of Christmas Past

December 12th & 19th
Wednesdays 5:00 - 9:00 PM
December 9th, 16th, & 23rd
Sundays 1:30 - 6:00 PM

2018 Victorian CHRISTMAS

An Old-Fashioned Holiday in Historic Downtown Nevada City

Santa & Strolling Carolers • Carriage Rides
Children's Activities • Victorian Characters
Roasted Chestnuts • Holiday Shopping
Handcrafted Christmas Gifts
Delicious Foods • and much more!

Fine Shops & Restaurants

Wednesday Evenings
December 12th & 19th
5:00 - 9:00pm

Sunday Afternoons
December 9th, 16th, & 23rd
1:30 - 6:00pm

Shuttle Service (see map)
$5 Round Trip, Free for ages 15 & under

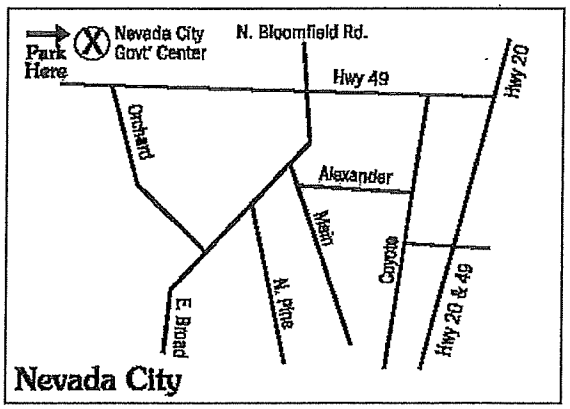

Nevada City Chamber of Commerce (530)265-2692
www.nevadacitychamber.com

CITY OF NEVADA CITY
SPECIAL EVENT APPLICATION / CONTRACT

EVENT NAME: MARDI GRAS PARADE & STREET FAIRE FEB 14, 2021

EVENT INFORMATION. Please attach a detailed description of your event to this application (e.g. Overall summary, open to the public? How being publicized? Kid/family friendly? Rain or shine? Etc.)

Type of Event (Check all that apply)

✓ Parade/Procession ___ Concert ✓ Street Festival/Block Party
___ Run/Walk/Bicycle ___ Fundraiser ___ Other: _____

Has this event been produced before? (Yes) No
Is this an annual event? (Yes) No
Will there be an admission or entry fee? Yes (No)
If yes, fee per adult: $_____ Fee per child: $_____

Event Date(s) FEBRUARY 14, 2021

Expected number of:
Attendees 2000 Participants 100 Volunteers 35
Units and floats for parade: APPROX 35 (49 is limit)

	PARADE		STREET FAIRE
Event Hours	Start 2pm	End 3:30	11am – 4pm
Set-up	Date 2.14.21	Time 12:15-2pm	9am – 11am
Break Down	Date 2.14.21	Time 3:30-5pm	4pm – 5pm

Names of street(s), sidewalk(s), alley(s) proposed to be closed (Attach additional pages or a map if necessary). Note that it may be necessary to consult with a Police Lieutenant (265-2626) and/or the Public Works Superintendent (265-2496) to accurately identify requested street closures.

_____ between _____ & _____
_____ between _____ & _____

(See attached maps)

Additional Facilities Requested
Event organizers may be asked to complete a Facility Rental Contract with details about use of these additional facilities. Rental fees & cleaning deposits may apply.

___ Robinson Plaza ___ Calanan Park ___ Other: _____

Please note whether your event includes any of the following. If any apply, attach details.

✓ Amplified sound ✓ Concessions ✓ Food Vendors
___ Stages/Platforms ✓ Food Cooking ___ Alcohol sales
✓ Tents/Temporary Structures ___ Animals will be present ___ Temporary Lighting

MARDI GRAS STREET FAIRE

MAP 1

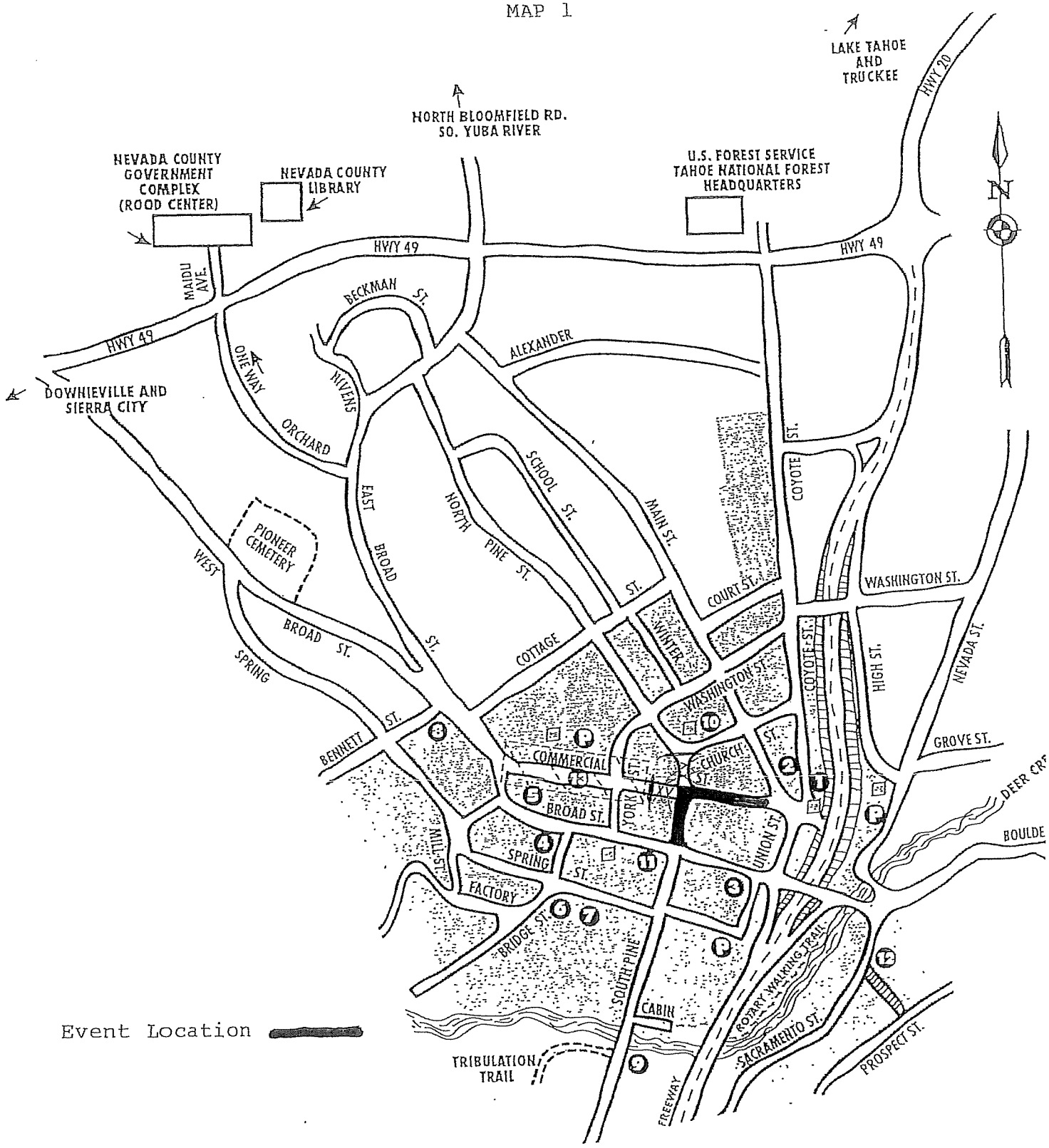

MARDI GRAS PARADE

MAP 2

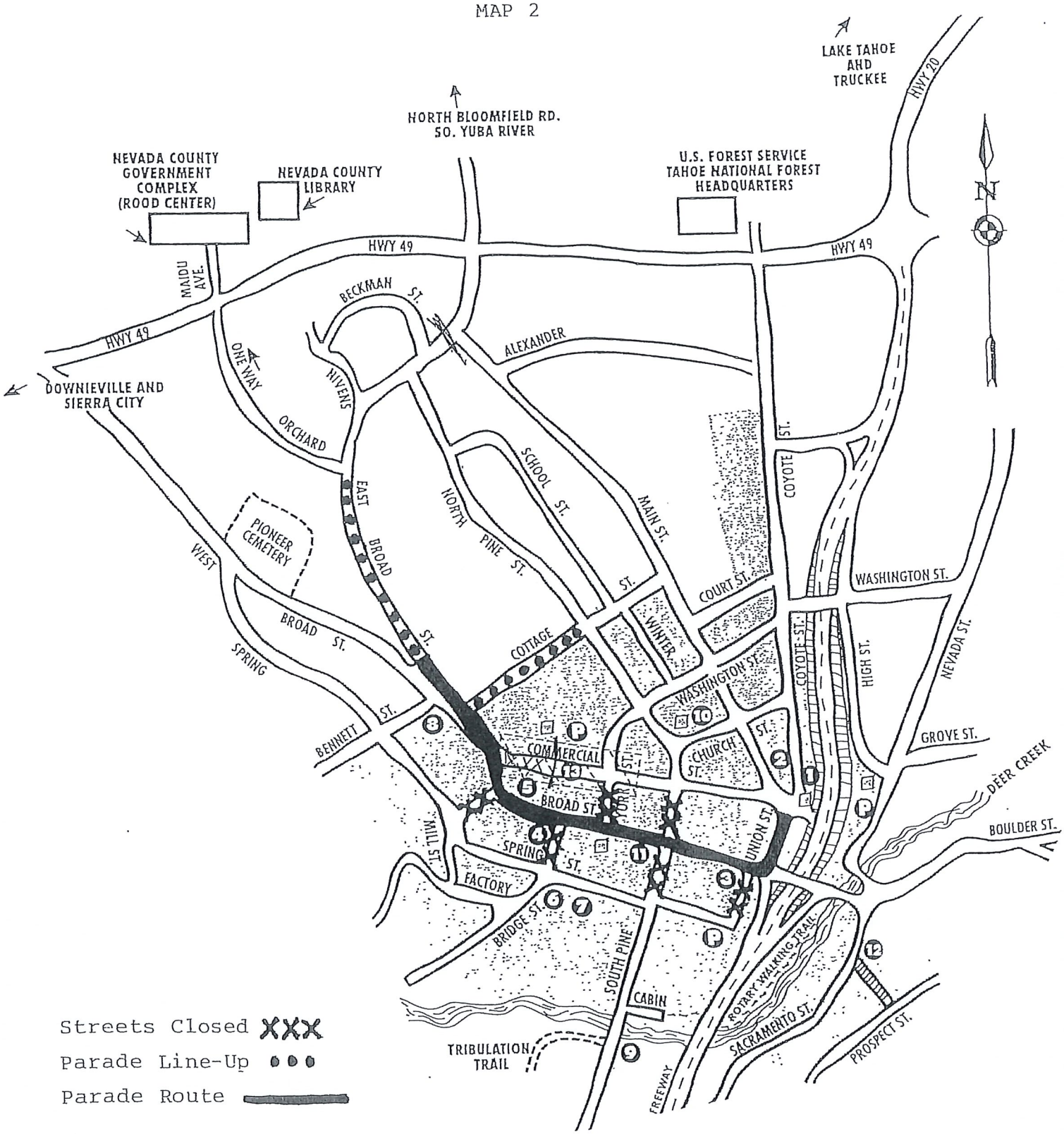

Mardi Gras Parade & Street Faire

On Sunday, the Mardi Gras Street Faire will be held on North Pine Street, in Historic Downtown Nevada City, from 11:00 a.m. to 4 p.m. There will be food, drink, crafts, and clothing.

The Mardi Gras Parade begins at 2 p.m. Sunday and moves down Broad Street through the center of town. It is a rain or shine event. Merry spectators of all ages line the parade route while gaily masked societies parade through the historic district handing out beads, toys, trinkets, bangles and more. Everyone is encouraged to attend in festive Mardi Gras attire.

APPLICANT INFORMATION

Sponsoring Organization/Company NEVADA CITY CHAMBER

Name of Applicant/Responsible Party NEVADA CITY CHAMBER

Street Address 132 MAIN ST. Apt/Unit/Suite _____

City NEVADA CITY State CA Zip Code 95959

Email info@nevadacitychamber.com

Daytime Phone 530.265.2692 Cell Phone _____

Does the sponsoring organization have experience producing similar events? Yes / No (Circle One)

Event Contact for Public Information

Name NEVADA CITY CHAMBER Contact Phone 530.265.2692

Email info@nevadacitychamber.com

Website www.nevadacitychamber.com

Day of Event Contact Information

On-site Contact Name CATHY WHITTLESEY

On-site Contact Cell Number 530.913.7064

Day of Event ALTERNATE Contact Information

On-site Contact Name CINDY MOON

On-site Contact Cell Number 530.263.4613

APPLICATION FEES

The City requires the payment of a non-refundable application fee upon submission of your completed application. Late fees apply to applications filed less than 90 days in advance of an event. The City does not guarantee any application submitted less than 45 days in advance will be able to be submitted to the City Council for consideration prior to the planned event. Please select from the following table the fee(s) that apply to your application:

_____ $100 Timely application for single new event OR old event with new sponsor
_____ $50 Timely application for repeat of event with same sponsor
_____ $25 For each additional application for new event by the same sponsor
_____ $10 For each additional application for repeat of event with same sponsor
_____ $75 Additional fee for applications filed less than 90 days in advance of an event
_____ $100 Rental Fee for Robinson Plaza or Calanan Park
_____ $100 Cleaning Deposit for use of Robinson Plaza or Calanan Park

$_____ **Total Fees**

APPLICANT AUTHORIZATION AND INDEMNITY

To the extent allowed by law, Applicant agrees to defend, indemnify, and hold harmless the City of Nevada City, its agents, officials, and employees from and against all claims, damages, losses, injuries, illness, accidents relating to, arising out of, or resulting from, the use of this Special Event Application and the information contained therein, and any resulting Contract.

Applicant acknowledges that the information provided in this Application is true and accurate to the best of Applicant's knowledge and belief.

I have read, understand and agree to comply with all the information provided in the Special Event Application (attached) and any resulting permits and Special Event Contract if approved by the City Council.

Cathy Dwyer Clesey

Signature of Applicant/Responsible Party

2.27.20

Date

CITY OF NEVADA CITY
SPECIAL EVENT GUIDELINES

OVERVIEW

Thank you for choosing the City of Nevada City as the location for your event. The City requires the submittal of a Special Event Application as a pre-condition of considering whether to enter into an agreement to grant temporary use of all or any portion of a public street, sidewalk or alley.

Application materials must be completed in full and submitted to the City at least 90 days prior to your event date, and no more than one year in advance of the event date. Applications are accepted on a first-come, first-served basis. A non-refundable application fee must be paid upon submission of your completed application. Use "NA" for "not applicable" to questions or sections that do not apply to your event. Incomplete applications will not be accepted and will delay processing which could affect the availability of your preferred event date or location. Please note the information you provide becomes public information.

City staff review the Application/Contract. Notes from Police, Fire, Public Works and Parks & Recreation will be presented to City Council for consideration. City Council approves or disapproves your Application/Contract at a formal noticed public meeting. Applicants are strongly encouraged to attend the designated City Council meeting in order to discuss their proposed event and answer related questions. Please ensure you have City Council approval before marketing or advertising your event.

EVENT REQUIREMENTS

Alcohol. If alcohol is sold at your event, an Alcohol Permit from California Alcohol Beverage Control (ABC) is required. Please contact ABC at (916) 419-1319.

Amplified Sound. If the event will have amplified sound, applicant is required to have an event staff member responsible for monitoring sound levels to assure compliance with City noise standards when sound/music/noise may be audible beyond the event venue.

Business License. All vendors participating in an event held in Nevada City must obtain a current business license. For information about business license requirements, call City Hall at (530) 265-2496 x100.

Form of Payment. The City accepts payment in the form of cash, personal/business check, money order or cashier's check. Please note there will be a $25 service charge for all returned checks.

Insurance. The applicant and/or the sponsoring organization is required to provide proof of insurance. A current or valid Certificate of General Liability Insurance in the amount of $1,000,000 and an endorsement (CG2026 or equivalent) naming the City of Nevada City as additional insured will be required at least 30 days prior to the event.

Event Notification. An event can change the normal flow of residential and business activity potentially causing a negative impact on the community. As the event organizer, you are responsible for notifying those residents and businesses that are adjacent to the planned closure prior to submission of your Application. Applicants must meet the Event Notification requirements unless the event is sponsored by the Nevada City Chamber of Commerce or has been approved and held annually in the same manner for three or more years. The preferred method of notification is the Requested Special Event Notification Form (Addendum A). Unless otherwise exempt, your application materials must include a signed Notification Certification (Addendum B) confirming adjacent residents and businesses were notified of the planned event.

Parking. Applicants will be required to work with the Nevada City Police Department to facilitate ingress/egress requirements for event participants.

Restrooms. Public restrooms are limited to two for downtown events, one at Robinson Plaza and one in the Commercial Street parking lot. If your event is planned for more than 50 people or in an area away from either public restroom, you may be required to provide restroom accommodations and hand washing facilities for event attendees in the quantity prescribed by the City.

Waste Management/Recycling. You are responsible for properly disposing of all waste and garbage throughout the term of your event, and immediately upon conclusion of the event the area must be returned to a clean condition. Therefore, the City may require the applicant to provide trash and recycling containers if the event involves food or drink vendors. Should cleanup be inadequate or damage to City property occurs, you will be billed at full recovery rates, plus overhead for cleanup and repair.

Runs/Walks/Bicycle. If you put chalk, stickers or other directional markings on streets, sidewalks or trails, these markings must all be removed at the end of your event.

CHECKLIST

Before you submit your application to the City of Nevada City, please make sure you have completed the following steps:

___ Sign AND date your Application/Contract.

___ Attach a detailed event description and additional information as needed

___ Secure required insurance for the event.

___ Include a Notification Certification confirming businesses and residents have been notified of the planned event.

___ Calculate and include the applicable fee.

Submit your completed application to:

City of Nevada City, Attn. Special Event Applications, 317 Broad Street, Nevada City, CA 95959

From:	Bubba Highsmith
To:	Tanya Horton; Paul Rohde; Sam Goodspeed
Subject:	RE: Just a Reminder about -Chamber of Commerce Street Closure Request /Special Request- 10 Applications
Date:	Wednesday, March 4, 2020 2:16:38 PM

Please make sure 72hr. Notices are on parking meters 72hr prior to event start time see responsible parties below.
Nevada City Village Market Day: Event Group Will hang 72hrs notices on Parking meters
First Friday Art Walk: Event group Will hang 72hr. Notices on Parking Meters
On the rest of the events DPW will hang the 72hr Notices.

logo

Bubba Highsmith
City Of Nevada City
Superintendent of Public Works
bubba.highsmith@nevadacityca.gov
office: (530) 265-2496 ext. 148
Cell: (530) 277-0278

CONFIDENTIALITY NOTICE: This communication with its contents may contain confidential and/or legally privileged information. It is solely for the use of the intended recipient(s). Unauthorized interception, review, use or disclosure is prohibited and may violate applicable laws including the Electronic Communications Privacy Act. If you are not the intended recipient, please contact the sender and destroy all copies of the communication.

From: Tanya Horton <Tanya.Horton@nevadacityca.gov>
Sent: Tuesday, March 3, 2020 1:10 PM
To: Paul Rohde <Paul.Rohde@nevadacityca.gov>; Bubba Highsmith <bubba.highsmith@nevadacityca.gov>; Sam Goodspeed <Sam.Goodspeed@nevadacityca.gov>
Subject: Just a Reminder about -Chamber of Commerce Street Closure Request /Special Request- 10 Applications
Importance: High

Hi,

Just wanted to send a reminder out regarding the above street closures. Catrina wanted to see if we could get a response so she can put them on the Agenda Thursday.

Thank You,

Tanya Horton
City of Nevada City
Customer Service Representative
530-265-2496 x100
www.nevadacityca.gov

From: Tanya Horton
Sent: Monday, March 02, 2020 3:34 PM
To: Paul Rohde <Paul.Rohde@nevadacityca.gov>; Bubba Highsmith <bubba.highsmith@nevadacityca.gov>; Sam Goodspeed <Sam.Goodspeed@nevadacityca.gov>
Subject: Chamber of Commerce Street Closure Request /Special Request- 10 Applications
Importance: High

Hello,

Please see the attached 10 requests we received from the Chamber Of Commerce. Catrina is trying to get all departments to respond before Thursday so she can get them on the next agenda. Please advise. Thanks!

Thank You,

Tanya Horton
City of Nevada City
Customer Service Representative
530-265-2496 x100
www.nevadacityca.gov

From: Sam Goodspeed
To: Tanya Horton
Subject: Street Closure Requests
Date: Tuesday, March 3, 2020 1:29:16 PM

Tanya,

The Nevada City Fire Department has the following conditions for the proposed;

Mardi Gras Parade and Street Faire	February 14, 2021
First Friday Art Walk	May 1, 2020, June 5, 2020, July 3, 2020 and August 7, 2020
Nevada City Village Market	May 17, 2020
Nevada City Classic Brewfest	June 13, 2020
Nevada City Bicycle Classic	June 14, 2020
4th of July Parade	July 4, 2020
Summer Nights in Nevada City	July 15, 2020, July 22, 2020, July 29, 2020
Constitution Day Concert	September 19, 2020
Constitution Day Parade	September 20, 2020
Victorian Christmas	December 6, 2020, December 13, 2020, December 16, 2020, December 23, 2020

1. Must maintain 14 ft. FIRE LANES.
2. No parking in RED ZONES.
3. No blocking of FIRE HYDRANTS.

Sincerely,

Sam Goodspeed
Division Chief
Grass Valley / Nevada City Fire Department
Office: (530) 265-2351 ext. 11
Mobile: (530) 957-9892
sam.goodspeed@nevadacityca.gov

Confidentiality Notice: The information contained in this e-mail may be confidential and legally privileged. It is intended **only** for use of the individual(s) named. If you are not the intended recipient, you are hereby notified that the disclosure, copying, distribution, or taking of any action in regards to the contents of this e-mail – except its direct delivery to the intended recipient – is strictly prohibited. If you have received this e-mail in error, please notify the sender immediately and destroy this e-mail and any attachments, and delete from your system, if applicable.

From:	Paul Rohde
To:	Tanya Horton
Subject:	RE: Just a Reminder about -Chamber of Commerce Street Closure Request /Special Request- 10 Applications
Date:	Wednesday, March 4, 2020 1:56:10 PM

Tanya; theses are typical straight forward requests. The only thing I am going to add is to be sure all street closures are marked 72 hours in advance. Without proper notice vehicles will not be towed.

PAUL ROHDE EMAIL BANNER

From: Tanya Horton
Sent: Tuesday, March 3, 2020 1:10 PM
To: Paul Rohde <Paul.Rohde@nevadacityca.gov>; Bubba Highsmith <bubba.highsmith@nevadacityca.gov>; Sam Goodspeed <Sam.Goodspeed@nevadacityca.gov>
Subject: Just a Reminder about -Chamber of Commerce Street Closure Request /Special Request- 10 Applications
Importance: High

Hi,

Just wanted to send a reminder out regarding the above street closures. Catrina wanted to see if we could get a response so she can put them on the Agenda Thursday.

Thank You,

Tanya Horton
City of Nevada City
Customer Service Representative
530-265-2496 x100
www.nevadacityca.gov

From: Tanya Horton
Sent: Monday, March 02, 2020 3:34 PM
To: Paul Rohde <Paul.Rohde@nevadacityca.gov>; Bubba Highsmith <bubba.highsmith@nevadacityca.gov>; Sam Goodspeed <Sam.Goodspeed@nevadacityca.gov>
Subject: Chamber of Commerce Street Closure Request /Special Request- 10 Applications
Importance: High

Hello,

Please see the attached 10 requests we received from the Chamber Of Commerce. Catrina is trying to get all departments to respond before Thursday so she can get them on the next agenda. Please advise. Thanks!

Thank You,

Tanya Horton
City of Nevada City
Customer Service Representative
530-265-2496 x100
www.nevadacityca.gov

REPORT TO CITY COUNCIL

City of Nevada City
317 Broad Street
Nevada City, CA 95959
www.nevadacityca.gov

March 11, 2020

TITLE: Resolution 2020-XX Establishing a Nevada City Fire Safety Advisory Committee

RECOMMENDATION: Pass Resolution 2020-XX, a Resolution of the City of Nevada City, City Council establishing a Nevada City Fire Safety Advisory Committee.

CONTACT: Catrina Olson, City Manager

BACKGROUND/DISCUSSION:
On February 10, 2020, the City Council, Planning Commission and executive staff held a planning retreat to focus on the three-year goals for the organization and identification of the six-month strategic objectives.

Vice Mayor Minett has been working with the three Nevada City Firewise communities for over a year now on vegetation management and fire mitigation. The three Firewise community organizations put forward a proposal for consideration at the Strategic Planning Retreat to create a Nevada City Fire Safety Advisory Committee.

The proposed Resolution establishes a standing Nevada City Fire Safety Advisory Committee with the following guidelines governing its membership, function, and mission:

- Comprised of seven members consisting of one Council Member who will serve as the Chairperson, one City staff member, and five (5) members of the community, such as Firewise members, residents, business owners, etc. Diversity on the committee is pivotal. Staff recommends that the Council appoint Vice Mayor Minett as the initial Council member committee member and Division Chief Sam Goodspeed as the City staff member committee member.

- Committee members will serve two-year terms.

- To promote public fire safety and community involvement to protect Nevada City residents, business owners, visitors and structures from wildfire.

- Establish objectives to support overall vegetation management and wildfire mitigation, identify funding sources, and promote public education and awareness.

- Hold two (2) to three (3) meetings within the first month of creation of the committee and once per month thereafter.

- The City Manager or Deputy City Clerk will accept applications from parties interested in serving on the committee until March 17, 2020. The five at-large

committee members will be chosen by the procedures set forth in Resolution 2020-16 ("City Council Standards and Procedures.") The City Council will appoint by motion and a majority vote the Council member and City staff member to serve on the Committee.

- The Committee is subject to the Brown Act, and will comply with all meeting noticing and other applicable legal requirements.

ENVIRONMENTAL CONSIDERATIONS: Not applicable.

FINANCIAL CONSIDERATIONS: Not applicable.

ATTACHMENTS:

- ✓ Resolution 2020-XX, a Resolution of the City of Nevada City, City Council Establishing a Nevada City Fire Safety Advisory Committee

RESOLUTION NO. 2020-XX

A RESOLUTION FOR OF THE CITY OF NEVADA CITY, CITY COUNCIL ESTABLISHING A NEVADA CITY FIRE SAFETY ADVISORY COMMITTEE

WHEREAS, the City of Nevada City held a Strategic Planning Session on February 10, 2020; and

WHEREAS, at each six-month planning session City executive staff, City Council and Planning Commission review the City's three-year goals and develops objectives to support these goals; and

WHEREAS, one of the established three-year goals is to improve safety and security of the City residents and visitors; and

WHEREAS, one of the objectives developed during this planning session for this three-year goal was to establish an Nevada City Fire Safety Advisory Committee; and

NOW THEREFORE, BE IT RESOLVED, the City Council of Nevada City does hereby resolve, determine and order as follows:

Section 1. A standing Fire Safety Advisory Committee is hereby established.

Section 2. The Committee will be comprised of seven members consisting of one Council Member who will serve as the Chairperson, one City staff member, and five (5) at-large members of the community, such as Firewise members, residents, business owners, etc. The five at-large committee members will be chosen by the procedures set forth in Resolution 2020-16. ("City Council Standards and Procedures.") The City Council will appoint by motion and a majority vote the Council member and City staff member to serve on the Committee. Committee members will serve for two-year terms.

Section 3. The purpose of the Fire Safety Advisory Committee shall be to promote public fire safety and community involvement to protect Nevada City residents, business owners, visitors and structures from wildfire.

Section 4. The Committee will establish objectives to support the creation of an overall comprehensive vegetation management plan for wildfire mitigation plan and healthy forests, funding strategies and grant opportunities for City owned property vegetation management and maintenance, along with residential vegetation management and maintenance and public education and awareness.

Section 5. The committee shall meet two (2) to three (3) times within the 1st month beginning April 2020 and shall meet once a month thereafter unless the committee choses to change the meeting frequency. All committee meetings shall be noticed and conducted in accordance with the Brown Act.

Section 5. The committee shall provide updates to City Council quarterly regarding committee activity, unless the committee needs Council approval for any suggested projects before the next quarterly update.

Section 6. Applications for inaugural committee memberships are available on the Nevada City website and should be forwarded to the City Manager or Deputy City Clerk by March 17, 2020.

Section 7. Vice Mayor Erin Minett is hereby appointed as the inaugural City Council member committee member/Chairperson of the committee.

Section 8. Fire Division Chief Goodspeed is hereby appointed as the inaugural City staff member committee member of the committee.

PASSED AND ADOPTED at the regularly scheduled meeting of the Nevada City, City Council held on the 11th day of March, 2020 by the following vote:

AYES:

NOES:

ABSENT:

ABSTAIN:

Reinette Senum, Mayor

ATTEST:

Niel Locke, City Clerk

REPORT TO CITY COUNCIL

City of Nevada City
317 Broad Street
Nevada City, CA 95959
www.nevadacityca.gov

March 11, 2020

TITLE: Prop 68 Application Update and Pioneer Park Project List

RECOMMENDATION: Approve the updated Project List for Pioneer Park.

CONTACT: Dawn Zydonis, Parks & Recreation Manager

BACKGROUND / DISCUSSION:
The City applied for grant funds through Proposition 68: Statewide Park Program to make improvements and add new amenities to Pioneer Park. The grant application included:

- Construction of trails/walkways and access points throughout the Park
- Construction of two pickleball courts
- Renovation of the lower ballfield - drainage improvements
- Renovation of Seaman's Lodge
- Playground improvements
- Renovation of tennis courts and lighting
- Renovation of parking lots
- Renovation of Looser Fountain

On February 27th, the City received notification that we had not been awarded funds through this grant application. The State received 478 grant applications requesting a total of $2.3 billion, which greatly exceeded the $254.9 million available. There will be future opportunities to apply for funds, but those deadlines have not been set yet.

Until that time, City staff would like to update the Pioneer Park – Project List. The Pioneer Park Master Plan was adopted December 12, 2012 and includes the Project Priority List. The Plan states the following about that Project List:

> *"Appendix E is the Project List for Pioneer Park. The list is updated and approved annually by the City Council. Projects will be completed when needed and/or when funding is available. Items on the list that have an asterisk (*) will have further explanation attached. It is understood that the projects on the Pioneer Park Project List would need sufficient funding, completion of detailed environmental impact studies and public review before proceeding with construction or development. Appendix E also includes projects that have been completed at Pioneer Park during the last 5 years. The City updates its Capital Improvement Plan (CIP) every 5 years. Projects from the Pioneer Park Project List will be included on the City's CIP as appropriate."*

The list was last updated by City Council in December 2015. Staff updated the list in February 2019 for use at public workshops as we collected information from the public

for the Prop 68 Grant Application. A copy of the 2019 list is attached to this staff report along with staff's Proposed List for 2020. In addition, staff have provided a list of projects that have been completed at the Park. Although there are many things that we want to accomplish at Pioneer Park, it's important to note that a lot of work has been completed in recent years.

ENVIRONMENTAL CONSIDERATIONS: No project will be completed without the required environmental review for that project.

FISCAL IMPACT: There is currently no proposed funding for any of the projects on the list. Projects will not be completed unless the appropriate funds are acquired or budgeted.

ATTACHMENTS:

- ✓ Letter from the state regarding the City's Prop 68 grant application
- ✓ Pioneer Project List – Updated by staff February 2019
- ✓ Pioneer Project List – Proposed March 2020
- ✓ List of completed Projects at Pioneer Park

State of California • Natural Resources Agency
DEPARTMENT OF PARKS AND RECREATION
P.O. Box 942896 • Sacramento, CA 94296-0001
(916) 653-7423

Gavin Newsom, *Governor*
Lisa Ann L. Mangat, *Director*

FEB 20 2020

RECEIVED
FEB 27 2020
CITY OF NEVADA CITY

Loree McCay
Administrative Services Manager
City of Nevada City
317 Broad Street
Nevada City, CA 95959

Re: City of Nevada City Pioneer Park Improvements - Proposition 68 Statewide Park Development and Community Revitalization Program (SPP)

Dear Loree McCay:

Thank you for your interest in the SPP program. The Office of Grants and Local Services (OGALS) has completed its multi-level review process of the SPP "Round Three" applications. Unfortunately, the project application listed above was not selected for funding.

SPP "Round Three" was the most competitive grant program in OGALS' nearly fifty-year history of grant administration. **A total of $2.3 billion was requested through 478 project applications. The amount requested greatly exceeded the $254.9 million available in this round.** OGALS believes that each application highlights a statewide need for local parks.

At this time, the application deadline for SPP "Round Four" is not yet established. OGALS will announce a series of statewide Application Workshops to share lessons learned from this current round of applications, and to assist applicants in preparing for the next round. Information about the SPP will be posted at www.parks.ca.gov/spp

OGALS looks forward to reviewing your "Round Four" grant application. If you have any questions about this project or the SPP, please contact the SPP Competitive Review Supervisor Natalie Bee at Natalie.Bee@parks.ca.gov or 916-651-0564.

Sincerely,

Sedrick Mitchell, Deputy Director
Community Engagement Division

cc: Project file

Pioneer Park - Project List

Adopted: December 2015 (Updates Feb. 2019)

Items with an asterisk (*) have further explanation attached.

	PROJECT	NOTES	EST. COST
1	Bike Racks - near playground/pool	completed	
2	Renovation of Seaman's Lodge - roof	completed	
3	Renovation of Seaman's Lodge - bathrooms		
4	Renovation of Seaman's Lodge - windows		
5	Renovation of Seaman's Lodge - upgraded fire system on stove hood	completed	
6	Renovation of Seaman's Lodge - upgrade kitchen (possibly to commercial standards)		
7	Renovation of Seaman's Lodge - fireplace		
8	Renovation of Seaman's Lodge - baffling or some other material to assist with absorbing sound waves		
9	Seaman's Lodge - paint outside and repair shudders		
10	Walk/bike path around perimeter of park *	see attached explanation	
11	Expansion of swimming pool area - move back fence *	see attached explanation	$42,000
12	Expansion of park *	see attached explanation	
13	Slide or other feature for the swimming pool		
14	Upgrade field for better drainage	some completed, but more could be done	
15	Carriage House (move Carriages to Railroad Museum, create usable space in current building)		$80,000
16	Renovation of bathrooms at tennis courts & picnic area	in progress	
17	Cottage - new roof (before completion of this project review the benefits of having the cottage in the park…is it beneficial to invest in the building?)		

Pioneer Park - Project List
Adopted: December 2015 (Updates Feb. 2019)

	PROJECT	NOTES	EST. COST
18	remove/refurbish decorative fountain		
19	Updated map of Pioneer Park - based on Record of Survey	completed by City Engineer	
20	wifi/internet access at Seaman's Lodge/park		
21	lights at tennis courts		
22	More parking (map 1974 - picnic right, Silva, Park Ave)		
23	Remove non-functioning sink in Picnic-Right; replace with a permanent structure similar to Picnic-Left	completed	
24	Swimming Pool shell rehabilitation	completed	
25	Upgrades to picnic area designed for people who have disabilities - improved pathway, new BBQ with counter, shade structure	in progress	
26	Picnic-right: remove old stone BBQ pits; put in a small playground; possibly exercise equipment	BBQ's have been removed	
27	Picnic area at bottom of stairs by playground: Make it function better; possible shade structure; and clean up hillside		
28	Upper Picnic Area: "counter" by BBQ		
29	Develop area behind Seaman's Lodge		
30	Stairs/improve walkway behind mower shed		
31	Portable fencing for lower ball field		

The following are explanations of the noted items on the Pioneer Park Project List.

~~#2: Seaman's Lodge Roof~~

~~It is recommended that the fire system on the stove hood be completed at the same time as the roof. If this is completed at a later time, there is a small risk of causing new issues with the roof. Also, if any changes are being made to the fireplace, this would be the appropriate time to make those changes as well for the same reason.~~

#10: Walk/bike path around perimeter of park

51% of the respondents on the Pioneer Park Survey say that they come through the park on their walks.
41% of respondents would like to see a bike/walk path added to the park.

#11: Expansion of swimming pool area - move back fence

By moving the fence on the south side of the swimming pool up towards Memorial Grove, seating spaces for patrons could be added and the immediate deck space by the swimming pool could be kept clear for safety.

#12: Expansion of park

a. There is a private residence in the center of the park. The current homeowners have been good neighbors of the park, but it is not ideal to have this private property in the middle of a public park. The City has had the purchase of the house on their priority list for many years. If able to purchase this property, the City plans to add a recreational amenity in this location. However, currently the .26 acres is zoned R1 and would need to undergo the planning review process to allow public use. This item can be removed. The City purchased the property in 2017.

b. The property located on the corner of Nimrod and Silva Avenue would complete the corner of the park and would be an ideal location for additional parking. – This property was purchased, the owners began construction of a home on the site, but didn't finish. It is for sale at this time.

c. As properties are developed along Little Deer Creek, the City should request that spaces along the creek be deeded to the City as open space or an easement should be provided, so that the City can expand the non-designated trail that currently runs along the creek.

Pioneer Park - Project List
Proposed March 2020

	PROJECT	NOTES	EST. COST
1	A new lawn mower		$8,000
2	New lights at tennis courts		$122,000
3	Renovate lower field for better drainage - outfield area of ballfield		
4	Renovation of Seaman's Lodge - bathrooms, kitchen, fireplace, sound absorbing materials, paint outside and repair shudders		$495,000
5	Renovate The Wagon Shed - move carriages to museum; fix roof to create covered picnic area		
6	Renovate Looser Fountain		$20,000
7	Renovate bathrooms at swimming pool - possibly also the office		
8	Develop area behind Seaman's Lodge - Pickleball Courts		$340,000
9	Trails/walkways and access points with lighting		$436,500
10	Renovate Parking Lots		$382,500
11	Playground Improvements (remove sand, add shade, ADA swing)		$422,000
12	Picnic area at bottom of stairs by playground: Make it function better; possible shade structure; and clean up hillside		
13	Upper Picnic Area: "counter" by BBQ		
14	Portable fencing for lower ball field	Little League is currently working on this	
15	Slide or other feature for the swimming pool		
16	Cottage - new roof (before completion of this project review the benefits of having the cottage in the park…is it beneficial to invest in the building?)		
17	A Plan for 425 Nimrod		

Pioneer Park - Project List
Proposed March 2020

	PROJECT	NOTES	EST. COST
1	A new lawn mower		$8,000
2	New lights at tennis courts		$122,000
3	Renovate lower field for better drainage - outfield area of ballfield		
4	Renovation of Seaman's Lodge - bathrooms, kitchen, fireplace, sound absorbing materials, paint outside and repair shudders		$495,000
5	Renovate The Wagon Shed - move carriages to museum; fix roof to create covered picnic area		
6	Renovate Looser Fountain		$20,000
7	Renovate bathrooms at swimming pool - possibly also the office		
8	Develop area behind Seaman's Lodge - Pickleball Courts		$340,000
9	Trails/walkways and access points with lighting		$436,500
10	Renovate Parking Lots		$382,500
11	Playground Improvements (remove sand, add shade, ADA swing)		$422,000
12	Picnic area at bottom of stairs by playground: Make it function better; possible shade structure; and clean up hillside		
13	Upper Picnic Area: "counter" by BBQ		
14	Portable fencing for lower ball field	Little League is currently working on this	
15	Slide or other feature for the swimming pool		
16	Cottage - new roof (before completion of this project review the benefits of having the cottage in the park…is it beneficial to invest in the building?)		
17	A Plan for 425 Nimrod		

REPORT TO CITY COUNCIL

City of Nevada City
317 Broad Street
Nevada City, CA 95959
www.nevadacityca.gov

March 11, 2020

TITLE: Update Regarding the Consideration of Ordinance Amendments for the Regulation of Wireless Telecommunication Facilities in the City

RECOMMENDATION: Provide staff direction on whether or not to have the Consulting Attorney incorporate requested Ordinance amendments and continue a first reading of a draft Ordinance to March 25, 2020.

CONTACT: Catrina Olson, City Manager
Amy Wolfson, City Planner

BACKGROUND / DISCUSSION:
At a second reading on September 25, 2019, the City Council, by a vote of 4 in favor and 1 abstention, approved Ordinance No. 2019-06, an Ordinance for the Regulation of Wireless Telecommunication Facilities in the City amending Chapter 17.150 and renaming it "Wireless Telecommunication Facilities in the City."

At the City Council meeting on November 13, 2019, Council discussed a table outlining results of a privately sponsored public workshop along with a "tracked-changes" version of the Ordinance provided by Mayor Senum. Councilmember Strawser advised that he had met with members of the public regarding the requested changes and they had come to a consensus over amendments to send to the Baron Bettenhausen Consulting Attorney and Robert Ross of CMS for consideration, which were provided to each of them following the meeting.

Baron Bettenhausen and Bob Ross both responded with their comments on the amendments. This information was forwarded to the working group on February 4, 2020 for review with a follow-up meeting (date to be determined) with Council Member, Strawser and finally Baron Bettenhausen.

This item was continued at the February 12, 2020 meeting to March 11, 2020.

The working group met with Council Member Strawser and Mayor Senum on March 6, 2020. There is an agreement on the amendments to the Telecom Ordinance that will be proposed and reviewed by Baron Bettenhausen and Bob Ross. City Manager, Catrina Olson is working to set a video conference with the entire working group and Council Members the Week of March 9, 2020 to review the final proposed amendments with Baron and Bob. Once consensus has been met with the working group Council members, Baron Bettenhausen and Bob Ross regarding the amendments, a final draft will be prepared by Baron Bettenhausen.

A request of continuance of this item to a future meeting is in order to avoid the expense of re-noticing this item. Staff recommends continuing this item to a date certain of March 25, 2020.

ENVIRONMENTAL CONSIDERATIONS: Not applicable at this time.

FINANCIAL CONSIDERATIONS: Protracted involvement of the Attorneys in drafting and changing the Wireless Facilities Ordinance is resulting in higher than average Attorney billings. It has been guesstimated by Bettenhausen that additions of amendments to the Ordinance could result in an additional 4 – 6 hours at $175 per hour. Noting again this is a guesstimate.

ATTACHMENTS:

- ✓ Public Working Group Ordinance Legal Notes 3-6-20
- ✓ Notes from the Public Working Group 3-2-20

The Legal Argument for a Revised Wireless Telecommunication Ordinance for Nevada City, CA

Page 1:

- FCC Orders: FCC 18-111 and FCC18-133

Page 1-2:

- Legal Advice Given to Nevada City by Jones and Mayer, and CMS
- Historical Development of the Wireless Telecommunication Ordinance and the Public Working Group

Page 2-3:

- Local Authority Protections Under the 1996 Telecommunications Act, Section 704

Page 3:

- FCC's Purpose and Authority

Page 4-8:

- Current 9th Circuit Court Case Argument that the FCC Orders: FCC 18-111 and FCC18-133 are in Violation of the 1996 Telecommunications Act

Page 9-10:

- Congressional Conference Report: Facilities siting: Radio Frequency Emission Standards, Pages 207-209 [To accompany S. 652] SECTION 704

Page 11-12:

- Shot Clocks and Batched Applications

Page 13:

- Conditional Use Zoning Permit Requirement for Small Cell Wireless Facilities
- Spacing Between Small Wireless Facilities

Page 13-15:

- Acceptable Zoning Regulations for Small Cells

Page 15-22

- Requiring Effective Radiated Power Limits

Page 23-25

- Ordinance Language regarding Non-Ionizing Electromagnetic Radiation (NIER)

The Legal Argument for a Revised Wireless Telecommunication Ordinance for Nevada City, CA
Nevada City Public Working Group – 3/6/2020

FCC Orders: FCC 18-111 and FCC 18-133 - *Accelerating Wireless Broadband Deployment by Removing Barriers to Infrastructure Investment; Declaratory Ruling and Third Report and Order; WT Docket No. 17-79; WC Docket No. 17-84.*

At its September 2018 open meeting, the FCC adopted a report and order (collectively, the "Order") in its ongoing proceeding to streamline the rollout of infrastructure for broadband services, including small cells for 4G and 5G wireless service. The Order has two parts:

(1) an new set of regulations (the "Rules") that govern shot clocks and other limited aspects of the rollout of small wireless facilities (a/k/a "small cells") and,

(2) a Declaratory Ruling that does not enact any new regulations but is the FCC's interpretation of how the provisions of Section 253 and 332(c)(7) of the Communications Act that limit state or local regulations that "effectively prohibit" the provision of wireless services should be applied. The Declaratory Ruling portion of the Order adopts the position that a state or local government need only "materially inhibit" a particular small wireless facility deployment in order for its action to constitute an "effective prohibition" under Section 253 or 332(c)(7).

Based on this conclusion, the Declaratory Ruling provides guidance on fees local governments may charge and on how they may regulate ancillary rollout issues such as tower spacing, equipment design and other aesthetic concerns. **In lay terms, this means the FCC is making it easier for private companies to take local governments to court if they believe municipal policies are effectively prohibiting network investment.**

Legal Advice Given to Nevada City by Jones & Mayar, CMS, and the Development of the Ordinance and Public Working Group:

Based on this perception of litigious risk, the writing of Nevada City's Wireless Telecommunications Ordinance by Baron Bettenhausen, legal counsel for Jones and Mayer and hired by the City, took a cautionary approach. Consultants Robert Ross and Rusty Monroe from the Center for Municipal Solutions also contributed to the ordinance. As a strong reminder to the City Council and City Manager, local officials are **advised** by attorneys and consultants, the City doesn't report to them, nor are is the City obligated to accept their advice or ordinances written by them.

It was revised twice, Ordinance No. 2019-02 and Ordinance No. 2019-06, before being voted on by the City Council on September 11, 2019 and accepted, and again voted upon and accepted after an agendized discussion on September 25, 2019.

Public concern was expressed at the September 11, 2019 City Council meeting and subsequent City Council meetings regarding the ordinance development process, the lack of public input, the removal of certain protections between the first and second versions, and **the perceived weakness of the ordinance which does not utilize the City's current full Federal legal authority.**

The unofficial *Nevada City Wireless Telecommunications Ordinance Public Working Group (PWG)* was formed after the September 25, 2020 vote, comprised of members of the public who are working towards adoption of amendments to the ordinance. The amendment suggestions take into account the current Federal law and are following the example of existing wireless telecommunication ordinances

within California that address the latest FCC Order. At the December 10, 2019 City Council Meeting, the City agreed to having the PWG's suggested amendments, which were written into a copy of existing ordinance as a draft, reviewed by Bettenhausen and Ross and directed them to provide feedback in the form of written comments. The PWG's submission was done on December 11, 2019 via email to the City Manager and City Council.

On January 9, 2020, Catrina Olson, the City Manager received the feedback from Ross. On January 22, 2020, she received Bettenhausen's feedback. On January 23, 2020, the PWG emailed Olson and the City Council, asking for the feedback. On January 30, 2020, Council Member Duane Strawser emailed saying Olsen would be emailing the feedback to the PWG. Almost a month later, on February 4, 2020, Olson sent the feedback from both Bettenhausen and Ross to the PWG. The PWG reviewed the feedback and began development of their response on February 5, 2020.

On February 12, 2020, the PWG and Olson decided to move that night's City Council Agenda Item regarding the Amendments to the March 11, 2020 City Council meeting. This was so a meeting could be scheduled between the PWG, Bettenhausen, Ross and the City to discuss the amendment suggestions, the subsequent feedback and come to agreements on what would be included in a version that the Council could vote upon. A request to set this meeting was sent by the PWG to Olsen on February 18, 2020. On February 20, 2020 Olson responded that she will reach out to Bettenhausen and Ross to schedule, and required the PWG to meet with Council Member Duane Strawser first. On March 2, 2020, Strawser reached out to the PWG to set a meeting scheduled for March 6, 2020. The delay in meeting with Strawser delays the meeting with Bettenhausen and Ross, which delays the amendment review at the March 11, City Council meeting. Olson suggested that the PWG give an update to the Council on the Amendment review process at the March 11th meeting, and then reschedule the first reading of the amendments at the March 25, 2020 City Council meeting, giving the PWG time to meet with Bettenhausen and Ross.

When the amendments come up for the City Council vote, they will have been written by Bettenhausen. The PWG was given assurance by the City Manager that the version to be voted upon will be the final version that is worked on by the PWG and Bettenhausen, and that the PWG will have an opportunity to review carefully the tracked changes that have been worked on, compared to the final version to be voted on. Similar to the Nevada City Cannabis ordinance process, the public will verify that the final version to be voted upon is vetted for accuracy, to ensure a transparent and efficient process.

Legal Authority – The FCC, 1996 Telecommunication Act and Local Governments

In the following pages, the PWG is making the case to Bettenhausen, Ross and the City that the cautionary approach to a perceived risk of litigation by a telecommunications carrier is not in the best interest of Nevada City. The PWG's suggested amendments will create a stronger ordinance utilizing the full authority of the City's legal rights, backed by current Federal law and the precedence of existing California municipal ordinances.

Ultimate Version of the Telecommunications Act (S.652 passed in Feb 1996):
Section 253(a) provides that "[n]o State or local statute or regulation, or other State or local legal requirement, may prohibit or have the effect of prohibiting the ability of any entity to provide any interstate or intrastate telecommunications service." Section 332(c)(7) provides that "[t]he regulation of the placement, construction, and modification of personal wireless service facilities by any State or local

government or instrumentality thereof—(I) shall not unreasonably discriminate among providers of functionally equivalent services; and (II) shall not prohibit or have the effect of prohibiting the provision of personal wireless services."

The *1996 Telecommunications Act Amendments, in Section 704 of the Facilities Siting; Radio Frequency Emission Standards* states:
(a) National Wireless Telecommunications Siting Policy. — Section 332(c) (47 U.S.C. 332(c)) is amended by adding at the end the following new paragraph:
(7) **Preservation of local zoning authority.** —
(A) General authority. — Except as provided in this paragraph, **nothing in this Act shall limit or affect the authority of a State or local government** or instrumentality thereof over decisions regarding the **placement, construction, and modification** of personal wireless service facilities.

FCCs Purpose and Authority

U.S. Code Title 47 § 151 **Purposes of Federal Communications Commission**. LII –> U.S. Code –> Title 47. TELECOMMUNICATIONS –> Chapter 5. WIRE OR RADIO COMMUNICATION –> Subchapter I. GENERAL PROVISIONS –> Section 151. Purposes of Federal Communications Commission

For the purpose of regulating
- **interstate** commerce and
- **foreign** commerce

. . . in **communication by wire** **and radio**
. . . so as to make available, so far as possible, to all the people of the United States without discrimination on the basis of race, color, religion, national origin, or sex, a rapid, efficient, Nation-wide, and world-wide wire and radio communication service with **adequate facilities at reasonable charges,**
- for the purpose of the national defense,
- for the purpose of **promoting safety of life and property**

. . . through the use of wire and radio communications,
. . . and for the purpose of securing a more effective execution of this policy by centralizing authority heretofore granted by law to several agencies and by granting additional authority with respect to interstate and foreign commerce in wire and radio communication, there is created a commission to be known as the "**Federal Communications Commission**", which shall be constituted as hereinafter provided, and which shall execute and enforce the provisions of this chapter.
(June 19, 1934, ch. 652, title I, § 1, 48 Stat. 1064; May 20, 1937, ch. 229, § 1, 50 Stat. 189; Pub. L. 104–104, title I, § 104, Feb. 8, 1996, 110 Stat. 86.)

Note: the FCC's purpose does not grant the FCC authority over matters of intrastate commerce.

DRAFT

Current Litigation

February 11, 2020: U.S. Court of Appeals, Ninth Circuit Case 19-70144 et al. in Pasadena, CA.

Hearing on: *18-72689 Loc. Gov vs. FCC - Plaintiff seeks to Repeal FCC 18-111 and FCC 18-133*

The PWG agrees with the Plaintiff's position - the presumptive claims of FCC 18-111 and 18-133 are fragile; local authority is not constrained by the FCC Order of Aug. 2018. The Rule of Law, the Telecommunications Act of 1996 still holds.

- Per the FCC's interpretation of their Order: if the telecom carrier wants to replace a city utility pole to install a wireless facility, the city can't say no. The city can't ask carrier for proof of need; the city can't tell the applicant where to put it as an alternative; the city would have to accept and approve construction at any time; the city can't defend timing of construction.
- Under current law, Congress intended to preserve local authority; The FCC hasn't proven and defined standards of effective prohibition, aesthetics, or moratorium; they need to have limiting standards.

Four Flaws with the FCC Order as presented by the Plaintiffs:

1. The FCC is using a wrong definition of **effective prohibition;** a violation of the 1996 Telecommunications act of 1996, Sections 253A or 332C7; the city's action must directly prohibit. The FCC didn't apply an actual prohibition standard in adopting these rules. That is clear in the aesthetics discussion where the FCC says if they have to learn all the local rules and it causes them confusion, they argue they are prohibited. But their own case, 9th Circuit San Francisco vs. T-Mobile, it was determined that the mere cost does not rise to the occasion of prohibition.

   PWG Note: In the Small Cell Order, the FCC reaffirmed its interpretation that a locality can violate the "effective prohibition" language of Sections 253 and 332 by enacting regulations that merely "materially inhibit" the ability of wireless carriers to provide services. It specifically included in this category local regulations that affect carriers' ability to densify their networks or to add capacity to their networks. A regulation should not be seen as "materially inhibiting" any carrier's ability to offer its services, so long as a reasonable number of potential wireless facility locations would be available under the objective criteria. Such a regulation would be even more defensible if it has a "safety valve" that allows a carrier to meet capacity needs by allowing for placement of additional wireless facilities that do not meet the objective criteria. The regulation could even place the burden on the carrier to demonstrate the need for any additional non-compliant facility. A single "safety valve" decision would involve a limited geographic area and would be fact-specific, and should not be challengeable as a "material inhibition" on provision of wireless service in the locality.

2. Same thing with the **moratorium** – the FCC never considers if the city can plan around local construction prohibitions, which they can. FCC assumed that any delay in the permitting process is a material prohibition of putting in the type of facilities they want with the functional characteristics it wants in the time it wants. They failed to apply the standard the US Court of Appeals adopted based on plain language and preserving local zoning authority.

3. **Fees above cost:** FCC is assuming that if fees are above the $270 annual limit, it's a prohibition. Scenario – city denies permit for failure to pay their fee, applicant takes them to federal court to

DRAFT

show prohibition under 253D. The subsidy they say they will save from the above cost fee will go to rural less profitable areas is not proven by economic theory.

PWG NOTE: Within the Order, there is a presumed safe harbor for application and use fees, but no specific cap on fees:

- The safe harbor amounts are:
  (a) $500 for a single up-front application that includes up to five Small Wireless Facilities, with an additional $100 for each Small Wireless Facility beyond five,
  (b) $270 per Small Wireless Facility per year for all recurring fees, including any possible ROW access fee or fee for attachment to municipally-owned structures in the ROW, and
  (c) $1,000 for nonrecurring fees for a new pole.

The Order identifies application and usage fee amounts that are neither caps nor safe harbors, but simply what the FCC believes are levels at which carriers will not file legal challenges. The Order identifies $270 per year as a presumptively reasonable annual usage fee. This covers the right to attach an antenna to a pole or other facility and to locate associated equipment nearby. But if a city is providing not just the right to place antennas on city-owned poles, but ancillary facilities or services (such as access to electricity, existing underground ducts and underground casements at each pole), the FCC fee "guidelines" do not apply and the city can set the usage fees at any level it wishes. Cities should not be misled by carriers falsely claiming that the FCC's $270 annual usage fee includes anything other than the right to mount an antenna on a pole and put equipment nearby.

4. **The FCC must preserve local zoning authority per the Telecom Act – that is the intention of Congress.** Section 332 is the only provision that applies to the decisions regarding the placement of wireless facilities. The FCC made an error in saying otherwise. **Under Section 332c it's clear that what Congress was contemplating was a localized determination on a case by case basis of placement of facilities. The regulation of the operations of Wireless Telecommunications Facilities was never preempted from local zoning authority.**

PWG NOTE - See: *United States Supreme Court (2005) CITY OF RANCHO PALOS VERDES et al. v. ABRAMS (2005) No. 03-1601; Argued: January 19, 2005 | Decided: March 22, 2005 - CITY OF RANCHO PALOS VERDES, CALIFORNIA, et al., PETITIONERS v. MARK J. ABRAMS. . . on writ of certiorari to the United States Court of Appeals for the Ninth Circuit, March 22, 2005:*

Justice Scalia writes for the Supreme Court: *"Enforcement of §332(c)(7) through §1983 would distort the scheme of expedited judicial review and limited remedies created by §332(c)(7)(B)(v). We therefore hold that the 1996 Telecommunications Act — by providing a judicial remedy different from §1983 in §332(c)(7) itself — precluded resort to §1983. The judgment of the Ninth Circuit Court of Appeals which awarded attorneys fees is reversed, and the case is remanded for further proceedings consistent with this opinion...It is so ordered."*

Justice Breyer, with whom Justice O'Connor, Justice Souter and Justice Ginsburg join, concurring. *"I agree with the Court. It wisely rejects the Government's proposed rule that the availability of a private judicial remedy "*conclusively establishes *. . . a congressional intent to preclude (Rev. Stat. §1979, 42 U. S. C.) §1983 relief."* Ante*, at 8 …The statute books are too many, federal laws too diverse, and their purposes too complex, for any legal formula to provide more than general guidance. Cf.* Gonzaga Univ. *v.* Doe*, 536 U. S. 273, 291 (2002)… The Court today provides general guidance in the form of an "ordinary inference" that when Congress creates a specific judicial*

remedy, it does so to the exclusion of §1983. Ante*, at 8. I would add that context, not just literal text, will often lead a court to Congress' intent in respect to a particular statute. Cf.* ibid*. (referring to "implicit" textual indications). Context here, for example, makes clear that Congress saw a national problem, namely an "inconsistent and, at times, conflicting patchwork" of state and local siting requirements, which threatened "the deployment" of a national wireless communication system. H. R. Rep. No. 104-204, pt. 1, p. 94 (1995)…Congress initially considered a single national solution, namely a Federal Communications Commission wireless tower siting policy that would pre-empt state and local authority. Ibid.; see also H. R. Conf. Rep. No. 104-458, p. 207 (1996). But Congress ultimately rejected the national approach and substituted a system based on cooperative federalism. Id., at 207-208."*

Cooperative federalism is a concept of federalism in which federal, state, and local governments interact cooperatively and collectively to solve common problems, rather than making policies separately but more or less equally or clashing over a policy in a system dominated by the national government.

State and local authorities would remain free to make siting decisions. They would do so, however, subject to minimum federal standards of "placement, construction and modification of personal wireless facilities" — both substantive and procedural — as well as federal judicial review.

In the *Penultimate* Version of the TCA (HR 1555 from Fall 1995), in Section 107, the words operate and operation appear throughout. In the *Ultimate* Version of the TCA (S.652 passed in Feb 1996), in Section 704, the words operate and operations were removed, expressing Congressional intent:

1996 — SEC. 704. FACILITIES SITING; RADIO FREQUENCY EMISSION STANDARDS.
(a) National Wireless Telecommunications Siting Policy. — Section 332(c) (47 U.S.C. 332(c)) is amended by adding at the end the following new paragraph:
(7) **Preservation of local zoning authority.** —
(A) General authority. — Except as provided in this paragraph, **nothing in this Act shall limit or affect the authority of a State or local government** or instrumentality thereof over decisions regarding the **placement, construction, and modification** of personal wireless service facilities.
(B) Limitations. —

(i) The **regulation of the placement, construction, and modification** of personal wireless service facilities by any State or local government or instrumentality thereof —
(I) shall not unreasonably discriminate among providers of functionally equivalent services; and
(II) shall not prohibit or have the effect of prohibiting the provision of personal wireless services.

(ii) A State or local government or instrumentality thereof shall act on any request for authorization to **place, construct, or modify** personal wireless service facilities within a reasonable period of time after the request is duly filed with such government or instrumentality, taking into account the nature and scope of such request.

(iii) Any decision by a State or local government or instrumentality thereof to deny a request to **place, construct, or modify** personal wireless service facilities shall be in writing and supported by substantial evidence contained in a written record.

(iv) No State or local government or instrumentality thereof may regulate the **placement, construction, and modification** of personal wireless service facilities on the basis of the **environmental effects** of radio frequency emissions to the extent that such facilities comply with the Commission's regulations concerning such emissions.

(v) Any person adversely affected by any final action or failure to act by a State or local government or any instrumentality thereof that is inconsistent with this subparagraph may, within 30 days after such action or failure to act, commence an action in any court of competent jurisdiction. The court shall hear and decide such action on an expedited basis. Any person adversely affected by an act or failure to act by a State or local government or any instrumentality thereof that is inconsistent with clause (iv) may petition the Commission for relief.

(C) Definitions. — For purposes of this paragraph —

(i) the term '**personal wireless services**' means commercial mobile services, unlicensed wireless services, and common carrier wireless exchange access services;

(ii) the term '**personal wireless service facilities**' means facilities for the provision of personal wireless services; and

(iii) the term '**unlicensed wireless service**' means the offering of telecommunications services using duly authorized devices which do not require individual licenses, but does not mean the provision of direct-to-home satellite services (as defined in section 303(v))."

***18-72689 Loc. Gov vs. FCC*: Plaintiff's Argument Regarding Publicly Owned Utility Placements**

Section 224 of the Telecommunications Act – Congress stated the only grant of authority over electric utility poles in Telecommunications Act is found in section 224 which explicitly denies the FCC's authority with respect to public power utility poles. It grants the FCC authority to regulate rates, terms and conditions by cable companies to electric utility poles but was explicitly denied authority with respect to public power utilities and electric co-ops. As part of the '96 Telcom Act, Congress amended section 224 to expand the scope of it to telecom carriers in addition to cable operators, however it preserved the withholding of authority for electric co-ops and public power utilities. Significantly at the very same time as Congress enacted those amendments to section 224 it also adopted section 253 as well as amendment to section 332c7, neither of which address access to local government facilities.

The FCC bemoans the fact that they do not have control over local utility poles. The FCC is stating in their regulatory order that they do have this authority under section 253. In a single footnote, the FCC brushes aside arguments made about section 224 without elaboration and no meaningful statutory analysis. Specifically, the FCC states that Section 253 is an independent source of authority with respect to the very same poles that Section 224 expressly prohibits them from regulating. However, Section 253 is not a separate source of authority because Sec. 253 on its face only address government entities acting in a regulatory capacity and deals with state laws and regulations and legal requirements that are imposed in regulatory capacity and it doesn't in any way address access to facilities.

The FCC misapplied the Market Participant Doctrine which this Court has found to be application to Sec. 253. The Market Participant Doctrine under Boston Harbor and its progeny is that the presumption is that when a state or local government or entity is presumed to have the ability to act in a proprietary capacity as long as such conduct is analogous to other private entities in that space. The FCC has flipped

that and states that a government entity is not protected unless the statute "carves out an exception for proprietary activities." That's simply not what the Boston Harbor Market Participant Test says.

The FCC has regulatory authority over utilities for governing attachments and the section the court is talking about is a carve-out for the ability of the states to opt out the FCCs pole attachment authority by reverse preempting and saying we actually regulate utilities of this type on our own. The California PUC regulates private utility and so section 224c1 does not apply. Congress is talking about public facilities, and so that section does not apply. It states the public utility is not the type of utility subject to any FCC pole attachment authority. Section 253 doesn't say anything about facilities or utilities at all. Sec. 253 is general in authority to the FCC and Sec. 224 is a specific prohibition.

PWG NOTE: The Order does not impose non-discrimination requirements, i.e., it does not require municipalities to treat wireless carriers the same as they treat electric companies, cable companies or other utilities. The non-discrimination requirements identified in the Order are the FCC's interpretations of the language of Sections 253 and 332(C)(7), and are limited in scope. Section 253(a) addresses only state or local government actions (including discrimination) that effectively prohibit "any interstate or intrastate telecommunications service," while Section 332(c)(7)(B)(i)(II) is even narrower: only actions that effectively prohibit "personal wireless services," which is a small subset of telecommunications service. Thus, Section 253 only limits discrimination between providers of "telecommunications service," and the only type of discrimination that could potentially be problematic under Section 332(C)(7) would discrimination between "competing wireless services." Therefore, the Order does not (and the FCC could not) prohibit discrimination in fees, aesthetic requirements and application requirements as between wireless carriers and companies that do not provide "telecommunications service," a category that includes not only traditional utilities, but also cable companies and even wireline broadband Internet access providers (which under current FCC rules are not providers of telecommunications services).

***18-72689 Loc. Gov vs. FCC*: Plaintiff's Argument Regarding: Radio Frequency Issue**

In response to rule making comments by Montgomery County, MD that the FCC's RF exposure standards may not reflect the current safety research or account for this new 5G that we're going to see in the coming years and that the FCC must resolve those issues before accelerating the siting and the operation of these 5G small cells on public rights of way, the FCC offered a single sentence: It said it disagreed with any concerns that Montgomery County, MD or others have.

The burden of this court is heavy on the FCC – it has to show there is no possible way for this court to give any relief and so in our case we are asking the FCC to explain in the context of this order why RF is irrelevant or why it thinks it's important and how it's going to resolve this issue. No where in the rulemaking or 6 pages of 28J letters do they discuss the 5 G environment, densification, millimeter waves. In this case, we didn't get relief that we want. Our argument is they haven't addressed the issue. Montgomery County, MD wants to tell the residents 5G is safe that are being deployed, but the answer to safety is not answered. FCC didn't address the issue. They don't explain their decision, despite the huge record of concern. Two cases – in the 9th and DC Circuit – consolidating to DC in appeal to the order.

CURRENT LAW
FACILITIES SITING; RADIO FREQUENCY EMISSION STANDARDS Pages 207-209
CONGRESSIONAL CONFERENCE REPORT [To accompany S. 652] SECTION 704
See : https://www.congress.gov/104/crpt/hrpt458/CRPT-104hrpt458.pdf **(Summary Below)**

Senate bill: No provision.
House amendment: Section 108 of the House amendment required the Commission to issue regulations within 180 days of enactment for siting of CMS. A negotiated rulemaking committee comprised of State and local governments, public safety agencies and the affected industries were to have attempted to develop a uniform policy to propose to the Commission for the siting of wireless tower sites. The House amendment also required the Commission to complete its pending Radio Frequency (RF) emission exposure standards within 180 days of enactment. The siting of facilities could not be denied on the basis of RF emission levels for facilities that were in compliance with the Commission standard. The House amendment also required that to the greatest extent possible the Federal government make available to use of Federal property, rights-of-way, easements and any other physical instruments in the siting of wireless telecommunications facilities.

Conference agreement:

The conference agreement creates a new section 704 which **prevents Commission preemption of local and State land use decisions** and **preserves the authority of State and local governments over zoning and land use matters** except in the limited circumstances set forth in the conference agreement. The conference agreement also provides a mechanism for judicial relief from zoning decisions that fail to comply with the provisions of this section. It is the intent of the conferees that other than under section 332(c)(7)(B)(iv)of the Communications Act of 1934 as amended by this Act and section 704 of the Telecommunications Act of 1996 the **courts shall have exclusive jurisdiction over all other disputes arising under this section**. **Any pending Commission rulemaking concerning the preemption of local zoning authority over the placement, construction or modification of CMS facilities should be terminated.**

When utilizing the term ''functionally equivalent services'' the conferees are referring only to personal wireless services as defined in this section that directly compete against one another. The intent of the conferees is to ensure that a State or local government does not in making a decision regarding the **placement, construction and modification** of facilities of personal wireless services described in this section unreasonably favor one competitor over another. The conferees also intend that the phrase ''unreasonably discriminate among providers of functionally equivalent services'' will **provide localities with the flexibility to treat facilities that create different visual, aesthetic, or safety concerns differently to the extent permitted under generally applicable zoning requirements** even if those facilities provide functionally equivalent services. **For example, the conferees do not intend that if a State or local government grants a permit in a commercial district, it must also grant a permit for a competitor's 50-foot tower in a residential district.**

Actions taken by State or local governments shall not prohibit or have the effect of prohibiting the **placement, construction or modification** of personal wireless services. It is the intent of this section that bans or policies that have the effect of banning personal wireless services or facilities not be allowed and that decisions be made on a case-by-case basis.

DRAFT

Under subsection (c)(7)(B)(ii), decisions are to be rendered in a reasonable period of time, taking into account the nature and scope of each request. **If a request for placement of a personal wireless service facility involves a zoning variance or a public hearing or comment process, the time period for rendering a decision will be the usual period under such circumstances**. It is **not the intent of this provision** to give preferential treatment to the personal wireless service industry in the processing of requests, or **to subject their requests to any but the generally applicable time frames for zoning decision**.

The phrase ''substantial evidence contained in a written record'' is the traditional standard used for judicial review of agency actions.

The conferees intend section 332(c)(7)(B)(iv) to prevent a State or local government or its instrumentalities from basing the regulation of the **placement, construction or modification** of CMS facilities directly or indirectly on the environmental effects of radio frequency emissions if those facilities comply with the Commission's regulations adopted pursuant to section 704(b) concerning such emissions.

The limitations on the role and powers of the Commission under this subparagraph **relate to local land use regulations** and are not intended to limit or affect the Commission's general authority over radio telecommunications, including the authority to regulate the construction, modification and operation of radio facilities.

The conferees intend that the court to which a party appeals a decision under section 332(c)(7)(B)(v) may be the Federal district court in which the facilities are located or a State court of competent jurisdiction, at the option of the party making the appeal, and that the courts act expeditiously in deciding such cases. The term ''final action'' of that new subparagraph means final administrative action at the State or local government level so that a party can commence action under the subparagraph rather than waiting for the exhaustion of any independent State court remedy otherwise required.

With respect to the availability of Federal property for the use of wireless telecommunications infrastructure sites under section 704(c), the conferees generally adopt the House provisions, but substitute the President or his designee for the Commission.

It should be noted that the provisions relating to telecommunications facilities are not limited to commercial mobile radio licensees, but also will include other Commission licensed wireless common carriers such as point to point microwave in the extremely high frequency portion of the electromagnetic spectrum which rely on line of sight for transmitting communication services.

DRAFT

Shot Clocks and Batched Applications

The Order created four new shot clocks:

1. Collocation of small wireless facilities: Local government has 60 days to act upon to an application
2. Collocation of facilities other than small wireless facilities: 90 days.
3. Construction of new small wireless facilities: 90 days.
4. Construction of new facilities other than small wireless facilities: 150 days.

The order also provided for the resetting or pausing of the shot clock when a local government determines that an application is incomplete. If a municipality determines that an application is materially incomplete within ten day of filing and notifies the applicant of the deficiencies, the shot clock resets when the completed application is filed. In order to prevent last minute "pausing" of the shot clock by local governments, an incompleteness determination must be made by the 30th day after an application is filed, and within 10 days after resubmission if a re-submitted application is still incomplete.

The Order's shot clock requirements are not in compliance with the Federal intent. The CA state shot clock is 150 days.
" Under subsection (c)(7)(B)(ii), decisions are to be rendered in a reasonable period of time, taking into account the nature and scope of each request. If a request for placement of a personal wireless service facility involves a zoning variance or a public hearing or comment process, the time period for rendering a decision will be the usual period under such circumstances. It is not the intent of this provision to give preferential treatment to the personal wireless service industry in the processing of requests, or to subject their requests to any but the generally applicable time frames for zoning decision."

The shot clock deadlines have no direct legal effect. If an application is not acted on within the deadline, nothing happens unless a carrier either commences a formal complaint proceeding at the FCC or files a case in state or federal court. In either case, the carrier would have to demonstrate that the failure to act on the application amounts to an "effective prohibition" on wireless service under Section 253 or 332. The Order recognizes that the shot clock is only a presumption, and that local governments have the ability to demonstrate to a court that the delay is reasonable under the circumstances. If a court finds that a shot clock violation is an effective prohibition, it will most likely order the local government simply to make a decision by a specific date in the near future; a court is very unlikely to order a local government to grant a specific application.

Batched Applications are not a requirement under the FCC Order. In the discussion of batched applications, the Order makes clear that the applications can be either batched or individual:

> *IV. THIRD REPORT AND ORDER>103.> 2. Batched Applications for Small Wireless Facilities>113.* Given the way in which Small Wireless Facilities are likely to be deployed, in large numbers as part of a system meant to cover a particular area, we anticipate that some applicants will submit "batched" applications: multiple separate applications filed at the same time, each for one or more sites or a single application covering multiple sites. We define either scenario as "batching" for the purpose of our discussion here....Accordingly, when applications to deploy Small Wireless Facilities are filed in batches, the shot clock that applies to the batch is the same one that would apply had the applicant submitted individual applications. Should an applicant file a single application for a batch that includes both collocated and new construction of Small

> Wireless Facilities, the longer 90-day shot clock will apply, to ensure that the siting authority has adequate time to review the new construction sites.
>
> The FCC acknowledged that batched applications could strain local governments' resources and potentially justify a failure to meet shot clock deadlines. The FCC noted that under its "approach, in extraordinary cases, a siting authority, as discussed below, can rebut the presumption of reasonableness of the applicable shot clock period where a batch application causes legitimate overload on the siting authority's resources. Thus, contrary to some localities' arguments, our approach provides for a certain degree of flexibility to account for exceptional circumstances." The siting authority then will have an opportunity to rebut the presumption of effective prohibition by demonstrating that the failure to act was reasonable under the circumstances and, therefore, did not materially limit or inhibit the applicant from introducing new services or improving existing services.
>
> However, the Order continues to state: "In addition, consistent with, and for the same reasons as our conclusion below that Section 332 does not permit states and localities to prohibit applicants from requesting multiple types of approvals simultaneously, we find that Section 332(c)(7)(B)(ii) similarly does not allow states and localities to refuse to accept batches of applications to deploy Small Wireless Facilities. Order, ¶¶ 115

The FCC is misinterpreting Congress' intent when it concludes that Section 332 does not permit states and localities to prohibit applicants from requesting multiple types of approvals simultaneously and when they conclude that Section 332(c)(7)(B)(ii) does not allow states and localities to refuse to accept batches of applications to deploy Small Wireless Facilities. Within the legally binding parameters of the TAC 1996, a regulation should not be seen as "materially inhibiting" any carrier's ability to offer its services, so long as a reasonable number of potential wireless facility locations would be available under the objective criteria. The FCC is using a wrong definition of effective prohibition and is a violation of the 1996 Telecommunications Act of 1996, Sections 253A or 332C7. The local government's action must <u>directly</u> prohibit. The FCC did not apply an actual prohibition standard in adopting these rules.

Under current Federal Law, the 1996 Telecommunications Act of 1996, Sections 253A or 332C7, a local government could require individual applications rather than batched, and would be fulfilling its duty to:

> *… act on any request for authorization to **place, construct, or modify** personal wireless service facilities within a reasonable period of time after the request is duly filed with such government or instrumentality, taking into account the nature and scope of such request.*

DRAFT

Conditional Use Zoning Permit Requirement for Small Cell Wireless Facilities

Conditional Use Permits are not prohibited, and Administrative or Ministerial or Instant Approval are not required under the Order.

IV. THIRD REPORT AND ORDER> 4. When Shot Clocks Start and Incomplete Applications >144. "As noted above, multiple authorizations may be required before a deployment is allowed to move forward. For instance, a locality may require a zoning permit, a building permit, an electrical permit, a road closure permit, and an architectural or engineering permit for an applicant to place, construct, or modify its proposed personal wireless service facilities. All of these permits are subject to Section 332's requirement to act within a reasonable period of time, and thus all are subject to the shot clocks we adopt or codify here.

IV. THIRD REPORT AND ORDER> Subpart U—State and Local Government Regulation of the Placement, Construction, and Modification of Personal Wireless Service Facilities > § 1.6002 Definitions. (f) "Authorization means any approval that a siting authority must issue under applicable law prior to the deployment of personal wireless service facilities, including, but not limited to, zoning approval and building permit.

Spacing Between Small Wireless Facilities

The Order considers spacing requirements to be a subset of aesthetics requirements, and thus subject to same standard. The Order gives no guidance on what might be a reasonable spacing distance. Nevada City's Ordinance shall require: Each small cell must be at least **one thousand five hundred feet away** from the nearest small cell facility.

Acceptable Zoning for Small Cells

Legal argument regarding siting:

United States Supreme Court (2005)
CITY OF RANCHO PALOS VERDES et al. v. ABRAMS (2005) No. 03-1601
Argued: January 19, 2005 | Decided: March 22, 2005

> **"Congress initially considered a single national solution**, namely a Federal Communications Commission wireless tower siting policy that would pre-empt state and local authority. *Ibid.;* see also H. R. Conf. Rep. No. 104-458, p. 207 (1996). But **Congress ultimately rejected the national approach and substituted a system based on** cooperative federalism. *Id.*, at 207-208. View this Conference Report for the 1996 Telecommunications Act.

State and local authorities would remain free to make siting decisions. They would do so, however, **subject to minimum federal standards** [**just** "placement, construction and modification of personal wireless facilities" — both substantive and procedural — as well as federal judicial review.

The Nevada City Telecommunication Ordinance Public Working Group is not suggesting that the ordinance include a written "prohibition" to facilities in the PROW within residential zones as that would not meet compliance. However, the prohibition does apply to facilities

on public and private properties within residential zones. The City can regulate the construction, modification and operation of facilities in the PROW in residential zones for reasons of preserving the quiet enjoyment of streets, and can do so through a CUP process.

As the Court of Appeal noted (**T-Mobile West, supra, 3 Cal.App.5th at p. 351)**, **the word " 'incommode' " means " 'to give inconvenience or distress to: disturb**.' " (T-Mobile West, supra, 3 Cal.App.5th at p. 351, citing Merriam-Webster Online Dict., available at http://www.merriam-webster.com/dictionary/incommode [as of April 3, 2019].) The Court of Appeal also quoted the definition of "incommode" from the 1828 version of Webster's Dictionary. Under that definition, "incommode" means " '**[t]o give inconvenience to; to give trouble to; to disturb or molest in the quiet enjoyment of something, or in the facility of acquisition**.' " (T-Mobile West, supra, 3 Cal.App.5th at p. 351, citing Webster's Dict. 1828—online ed., available at <http://www.webstersdictionary1828.com/Dictionary/incommod e> [as of April 3, 2019].)

> The ruling: . . . ***the City has inherent local police power to determine the appropriate uses of land within its jurisdiction****. That power includes the authority to establish aesthetic conditions for land use . . . We also disagree with plaintiffs' contention that section 7901's incommode clause limits their right to construct [telephone] lines only if the installed lines and equipment would obstruct the path of travel. Contrary to plaintiffs' argument, the incommode clause need not be read so narrowly.*

For our purposes, it is sufficient to state that the meaning of incommode has not changed meaningfully since section 7901's enactment. Obstructing the path of travel is one way that telephone lines could disturb or give inconvenience to public road use. **But travel is not the sole use of public roads; other uses may be incommoded beyond the obstruction of travel**. (T-Mobile West, at pp. 355-356.) For example, lines or equipment might:

- generate **noise**,
- **cause negative health consequences**, or
- create **safety** concerns.

All these impacts could disturb public road use, or disturb its quiet enjoyment.

Localities can police the Quiet Enjoyment of Streets. Unfettered effective radiated power results in too much electromagnetic noise on our streets.

In order to preserve the quiet enjoyment of streets, a locality can pass an ordinance that limits the Effective Radiated Power (ERP) of Wireless Telecommunications Facilities (WTFs), using simple language, like the following:

"For any Close Proximity Microwave Radiation Antennas (CPMRA) Wireless Telecommunications Facility (WTF) that is

- installed in the public rights-of-way, or
- attached to any building, or
- has antennas installed at a height that is lower than 100 feet off the ground,

. . . the applicant **must** install **only** antennas, radios and other supporting equipment that **have no chance** of exceeding a total of **0.1 Watt of effective radiated power** from the face of the antenna shroud."

A cap of **0.1 Watt of ERP** for each qualifying CPMRA provides four main benefits:

1. Provides coverage for **Telecommunications service** for about 1/2 mile from the source antenna (more than **double** the distance of the industry-claimed need of 1,000 feet down the block)
2. **Does not effectively prohibit Telecommunications service, making this regulation legally defensible to wireless industry challenge**
3. Like City-regulated "speed limits," the ordinance can protect the quiet enjoyment of streets (part of the any city's police powers over **aesthetics**).
4. Complies with all FCC RF-EMR exposure guidelines.

Requiring Effective Radiated Power Limits

Definitions:

Altitude: the angle up or down from the horizon — a typical 48" tall small Wireless Telecommunications Facility antenna sprays wireless signal about 15° up and sprays wireless signal about 15° down from a horizontal plane located at the mid-point of the vertically-oriented antenna.

Antenna Gain — the ratio, usually expressed in decibels, of the power required at the input of a loss-free reference antenna to the power supplied to the input of the given antenna to produce, in a given direction, the same field strength or the same power density at the same distance. When not specified otherwise, the gain refers to the direction of maximum radiation. Gain may be considered for a specified polarization. Gain may be referenced to an isotropic antenna (dBi) or a half-wave dipole (dBd) antenna.

Antenna theory often starts with an isotropic antenna: an antenna that propagates in spherical shape from a point source. "Small Cell Antennas," in practice, are often a collection of vertically-oriented antennas, hidden behind an antenna shroud that is typically made of fiberglass to allow wireless signals to flow freely.

Azimuth: the angle formed between a reference direction and a line from the observer to a point of interest projected on the same plane as the reference direction orthogonal to the zenith.

Effective Radiated Power (ERP) — the product of the power supplied to the antenna and the antenna gain in a given direction relative to a half-wave dipole antenna.

A smart, effective, and legally incontestable local Municipal Wireless Code can and should limit the **Effective Radiated Power** which is:

Maximum Input Power (in Watts) × **Antenna-Gain** (a unitless fraction) =
Maximum Effective Radiated Power (in Watts ERP).

How can the City limit the Effective Radiated Power?

An Effective Radiated Power Limit of 0.1 Watts for all antennas within, and for all frequencies transmitted from, a Close Proximity Microwave Radiation Antenna Wireless Telecommunications Facilities shroud (a.k.a small cell) can be enforced 24/7 by a $5.00 Fuse that is under a locality's lock-and-key and placed on every CPMRA-WTF installation.

Localities can use their local police powers over the public rights-of-way to **preserve the quiet enjoyment of streets** by requiring two additional boxes on every CPMRA-WTF installation:

1. **A Fuse Box:** this gives control — and revenue (via policing fees) back to the locality (City or County)
2. **A Fiber Optic Sharing Box:** this ensures public benefit from fiber optic installations in the public rights-of-way. Sending Big Data (for video/music streaming, gaming or Internet) directly to homes via Wireline Fiber Optic cables and copper which uses **much less energy than via Wireless**. Private wireless will not be able to use of fiber optic cables in the public rights-of-way for their sole benefit. **The fiber optic cables, instead can be shared with the residents, as a condition for gaining access to the public rights-of-way. This is a fair rule that can apply to all Wireless providers in a non-discriminatory way.**

Localities can also **levy fines for ERP violations and set up a three-strikes-and-your-out program as a revenue-generating way** to police wireless carriers.

Regarding Wireless Routers

Review: FCC §15.223 Operation in the band 1.705-10 MHz.

(a) The field strength of any emission within the band 1.705-10.0 MHz **shall not exceed 100 microvolts/meter** (0.00003 $\mu W/m^2$) at a distance of 30 meters (98.5 feet).

Review: FCC ID: LZKM900D1 **From a Class B Approval**

- **Application:** Data Transceiver **Maximum output power**: **100 mW (0.1 Watt)**
- **Equipment Class:** DSS – Part 15 Spread Spectrum Transmitter

Review: §15.247 Operation within the following Wi-Fi Frequency bands

- 902-928 MHz,
- 2400-2483.5 MHz, and
- 5725-5850 MHz**.**

(a) Operation under the provisions of this Section is limited to

- frequency hopping intentional radiators
- digitally modulated intentional radiators

. . . that comply with the following provisions:

From Wikipedia: **Frequency-hopping spread spectrum** (**FHSS**) is a method of transmitting radio signals by rapidly changing the carrier frequency among many distinct frequencies occupying a large

spectral band. The changes are controlled by a code known to both transmitter and receiver. FHSS is used to avoid interference, to prevent eavesdropping, and to enable code-division multiple access (CDMA) communications.

- Since the FCC amended rules to allow FHSS systems in the unregulated 2.4 GHz band, many consumer devices in that band have employed various FHSS modes.
- FCC CFR 47 part 15.247 covers the regulations for 902-928 MHz, 2400-2483.5 MHz, and 5725-5850 MHz bands, and the requirements for frequency hopping
- Some walkie-talkies that employ FHSS technology have been developed for unlicensed use on the 900 MHz band.
- FHSS technology is also used in many hobby radio-controlled transmitters and receivers used for model cars, airplanes, and drones.
- **The transmitter will use all the channels in a fixed period of time**. The receiver can then find the transmitter by picking a random channel and listening for valid data on that channel. The transmitter's data is identified by a special sequence of data that is unlikely to occur over the segment of data for this channel.
- **FCC part 15** on unlicensed spread spectrum systems in the 902–928 MHz and 2.4 GHz bands permits **more power than is allowed for non-spread-spectrum systems**. **Both FHSS and direct-sequence spread-spectrum (DSSS) systems can transmit at 1 Watt**.

The FCC also prescribes a minimum number of frequency channels and a maximum dwell time for each channel:

Frequencies	**Channels**	**Dwell Time**	**Max Total Transmit Power**
902–928 MHz	50 or more	0.4 sec. in 10-20 sec. period	**1 Watt** for 50+ channels; **0.25 Watt** for 25-49 channels
2400-2483.5 MHz	15 or more	0.4 sec. in 0.4 sec. period × number of hopping channels used	**1 Watt** for 75+ channels; **0.125 Watt** for <75 channels
5725-5850 MHz	75 or more	0.4 sec. in 30 sec. period	**1 Watt** for 75+ channels

Based on the use of antennas with directional gains that do not exceed 6 dBi

A glance at today's Router Ranker shows products using four MIMO streams dominating the top ranker positions. This isn't because they have more power, because **all products must obey transmit power limits**, **which include effective gains due to antenna design and even beamforming.**

- The reason for the higher ranking of four stream products is the increased transmit spatial multiplexing gain and receive diversity gain provided by using more MIMO streams. A four-

DRAFT

stream product wireless router provides higher throughput at lower signal levels because it improves effective range, i.e. the area where you get throughput you can actually use.

- Cramming too many nodes in too small a space may result in degraded performance due to co-channel interference. More is not always better in the world of Wi-Fi.
- It **is illegal to mount Wi-Fi routers outside, like the Nighthawk Wi-Fi router (see image below) because it would cause interference**. It then logically follows that 100 milliWatts (0.1 Watt) of Effective Radiated Power is more than sufficient — in fact, sufficient to provide telecommunications service in a ½-mile radius.

FCC Office of Engineering & Technology Bulletin No. 62: **Digital devices fall into two categories — Class A and Class B**

- **Class A** digital devices are ones that are marketed exclusively for use in business, industrial and commercial environments.
- **Class B** digital devices are ones that are marketed for use anywhere, including residential environments.

The technical standards for Class B equipment are stricter than those for Class A equipment because the Class B equipment may be located closer to radios, TVs, and other receivers that tend to be susceptible to interference. The Class B technical standards are designed to protect against interference being caused to a receiver located about 10 meters away (around 33 feet).

Q: What is the difference between a Class A and Class B digital device? If a digital device will be sold to anyone who is likely to use it in a residential environment then it is a Class B digital device. When determining whether a particular device should be classified as Class A or Class B, the Commission normally considers the following three questions, in this order:

The FCC rules are contained in Title 47 of the Code of Federal Regulations (47 CFR), Part 2 and Part 15 are applicable to computers and other digital devices. Digital devices that connect to the public switched telephone network are subject to Part 68 registration requirements.

RF channel	Auto for 2.4GHz, CH 44 for WW SKU and CH 153 for North America SKU
Operating mode	Up to 800 Mbps at 2.4 GHz, 1733 Mbps at 5 GHz

Power adapter	• North America: 100-240V, 50/60 Hz input • UK, Australia: 100-240V, 50/60 Hz, input • Europe: 100-240V, 50/60 Hz input • All regions (output): 12V/3.5A DC output
Dimensions	11.22 x 7.26 x 1.97 in. (285 x 184.5 x 50 mm)
Weight	1.65 lb (750 g)

Electromagnetic emissions	FCC Part 15 Class B EN 55 022 (CISPR 22), Class B C-Tick N10947

Data encoding standards	• IEEE® 802.11 b/g/n 2.4 GHz–256 QAM support • IEEE® 802.11 a/n/ac 5.0 GHz
Maximum computers per WiFi network	Limited by the amount of WiFi network traffic generated by each node (typically 50–70 nodes).
Operating frequency range	AC2600 WiFi[3] • 800 Mbps @2.4GHz–256 QAM • 1733 Mbps @5 GHz 11ac
802.11 security	WPA2-PSK and WPA/WPA2
FCC Channels	• **Band 1**. 36, 40, 44, and 48 • **Band 2 (supports DFS)**. 52, 56, 60, and 64 • **Band 3 (supports DFS)**. 100, 104, 108, 112, 116, 120, 124, 128, 132, 136, and 140 • **Band 4**. 149,153,157, and 161

§15.15 **General technical requirements.**

(a) An intentional or unintentional radiator shall be constructed in accordance with good engineering design and manufacturing practice. Emanations from the device shall be suppressed as much as practicable, but in no case shall the emanations exceed the levels specified in these rules.

(b) Except as follows, an intentional or unintentional radiator must be constructed such that the **adjustments of any control that is readily accessible by or intended to be accessible to the user will not cause operation of the device in violation of the regulations**. Access BPL equipment shall comply

with the applicable standards at the control adjustment that is employed. The measurement report used in support of an application for Certification and the user instructions for Access BPL equipment shall clearly specify the user-or installer-control settings that are required for conformance with these regulations.

(c) Parties responsible for equipment compliance should note that the limits specified in this part will not prevent harmful interference under all circumstances. Since the operators of part 15 devices are required to cease operation should harmful interference occur to authorized users of the radio frequency spectrum, the **parties responsible for equipment compliance are encouraged to employ the minimum field strength** necessary for communications, to provide greater attenuation of unwanted emissions than required by these regulations, and to advise the user as to how to resolve harmful interference problems (for example, see §15.105(b))

§15.209 **Radiated emission limits; general requirements.**

(a) Except as provided elsewhere in this subpart, the emissions from an intentional radiator shall not exceed the field strength levels specified in the following table:

Using the PowerWatch Calculator here:

Frequency (MHz)	Field strength (µV/m)	Measurement distance (meters)	Volts per meter (V/m)	Millionths of a volt per meter (µV/m)	Millionths of Watt per square meter (µW/m²)
			61.4	61,400,000	10 ,000,000
			6.14	6,140,000	100,000
216 to 960	200	3	0.614	614,000	1,000
			0.0614	61,400	10
Above 960	500	3	0.00614	6,140	0.1
			0.000614	614	0.001
			0.000500	500	0.00066
			0.000500	200	0.00011

(e) The provisions in §15.31, §15.33, and §15.35 for measuring emissions at distances other than the distances specified in the above table, determining the frequency range over which radiated emissions are to be measured, and limiting peak emissions apply to all devices operated under this part.

§15.33 **Frequency range of radiated measurements.**

(a) For an intentional radiator, the spectrum shall be investigated from the lowest radio frequency signal generated in the device, without going below 9 kHz, up to at least the frequency shown in this paragraph:

(1) If the intentional radiator operates below 10 GHz: to the tenth harmonic of the highest fundamental frequency or to 40 GHz, whichever is lower.

(2) If the intentional radiator operates at or above 10 GHz and below 30 GHz: to the fifth harmonic of the highest fundamental frequency or to 100 GHz, whichever is lower.

(3) If the intentional radiator operates at or above 30 GHz: to the fifth harmonic of the highest fundamental frequency or to 200 GHz, whichever is lower, unless specified otherwise elsewhere in the rules.

(4) If the intentional radiator operates at or above 95 GHz: To the third harmonic of the highest fundamental frequency or to 750 GHz, whichever is lower, unless specified otherwise elsewhere in the rules.

(5) If the intentional radiator contains a digital device, regardless of whether this digital device controls the functions of the intentional radiator or the digital device is used for additional control or function purposes other than to enable the operation of the intentional radiator, the frequency range shall be investigated up to the range specified in paragraphs (a)(1) through (4) of this section or the range applicable to the digital device, as shown in paragraph (b)(1) of this section, whichever is the higher frequency range of investigation.

§15.35 **Measurement detector functions and bandwidths.**

The conducted and radiated emission limits shown in this part are based on the following, unless otherwise specified in this part:

(a) On any frequency or frequencies below or equal to 1000 MHz, the limits shown are based on measuring equipment employing a CISPR quasi-peak detector function and related measurement bandwidths, unless otherwise specified. The specifications for the measuring instrumentation using the CISPR quasi-peak detector can be found in ANSI C63.4-2014, clause 4 (incorporated by reference, see §15.38). As an alternative to CISPR quasi-peak measurements, the responsible party, at its option, may demonstrate compliance with the emission limits using measuring equipment employing a peak detector function as long at the same bandwidth as indicated for CISPR quasi-peak measurements are employed.

(b) Unless otherwise specified, on any frequency or frequencies above 1000 MHz, the radiated emission limits are based on the use of measurement instrumentation employing an average detector function. Unless otherwise specified, measurements above 1000 MHz shall be performed using a minimum resolution bandwidth of 1 MHz. When average radiated emission measurements are specified in this part, including average emission measurements below 1000 MHz, there also is a limit on the peak level of the radio frequency emissions. Unless otherwise specified, e.g., see §§15.250, 15.252, 15.253(d), 15.255, 15.256, and 15.509 through 15.519, the limit on peak radio frequency emissions is 20 dB above the maximum permitted average emission limit applicable to the equipment under test. This peak limit applies to the total peak emission level radiated by the device, e.g., the total peak power level. Note that the use of a pulse desensitization correction factor may be needed to determine the total peak emission level. The instruction manual or application note for the measurement instrument should be consulted for determining pulse desensitization factors, as necessary.

(c) Unless otherwise specified, e.g., §§15.255(b), and 15.256(l)(5), when the radiated emission limits are expressed in terms of the average value of the emission, and pulsed operation is employed, the measurement field strength shall be determined by averaging over one complete pulse train, including blanking intervals, as long as the pulse train does not exceed 0.1 seconds. As an alternative (provided the transmitter operates for longer than 0.1 seconds) or in cases where the pulse train exceeds 0.1 seconds, the measured field strength shall be determined from the average absolute voltage during a 0.1 second interval during which the field strength is at its maximum value. The exact method of calculating the average field strength shall be submitted with any application for certification or shall be retained in the measurement data file for equipment subject to Supplier's Declaration of Conformity.

Example of Petaluma's Current Ordinance
Language regarding Non-Ionizing Electromagnetic Radiation (NIER)

Example Ordinance Language:

Definition: NIER is non-ionizing electromagnetic radiation

Telecommunications facilities — Minimum application requirements.

The planning director shall establish and maintain a list of information that must accompany every application for the installation of a telecommunications facility. Said information may include, but shall not be limited to, completed supplemental project information forms, a specific maximum requested gross cross-sectional area, or silhouette, of the facility; service area maps, network maps, alternative site analysis, visual impact demonstrations including mock-ups and/or photomontages, visual impact analysis, **NIER (non-ionizing electromagnetic radiation) exposure studies**, title reports identifying legal access, security considerations, lists of other nearby telecommunications facilities known to the city, master plan for all related facilities within the city limits of Petaluma and within one-quarter mile therefrom; and facility design alternatives to the proposal and deposits for peer review, if deemed necessary by the director. The planning director may release an applicant from having to provide one or more of the pieces of information on this list upon a finding that in the specific case involved said information is not necessary to process or make a decision on the application being submitted

Telecommunications facilities — NIER exposure.

A. No telecommunication facility shall be sited or operated in such a manner that it poses, either by itself or in combination with other such facilities, a potential threat to public health. To that end no telecommunication facility or combination of facilities shall produce at any time power densities in any inhabited area as this term is defined in Section XXXXXX that exceed the ANSI (American National Standards Institute) C95.l-1992 standard for human exposure or any more restrictive standard subsequently adopted or promulgated by the city, county, the state of California, or the federal government.

B. Initial compliance with this requirement shall be demonstrated for any facility within five hundred feet of residential uses or sensitive receptors such as schools, churches, hospitals, etc. and all broadcast radio and television facilities, **regardless of adjacent land uses**, **through submission, at the time of application for the necessary permit or entitlement**, of NIER (Nonionizing Electromagnetic Radiation calculations) specifying NIER levels in the inhabited area where the levels produced are projected to be highest. If these calculated NIER levels exceed

eighty percent of the NIER standard established by this section, the applicant shall hire a qualified electrical engineer licensed by the state of California to measure NIER levels at said location after the facility is in operation. A report of these measurements and his/her findings with respect to compliance with the established NIER standard shall be submitted to the planning director. Said facility shall not commence normal operations until it complies with, or has been modified, to comply with this standard. Proof of said compliance shall be a certification provided by the engineer who prepared the original report. In order to assure the objectivity of the analysis, the city may require, at the applicant's expense, independent verification of the results of the analysis.

C. Every telecommunication facility within five hundred feet of an inhabited area and all broadcast radio and television facilities shall demonstrate continued compliance with the NIER standard established by this section. Every five years a report listing each transmitter and antenna present at the facility and the effective radiated power radiated shall be submitted to the planning director. If either the equipment or effective radiated power has changed, calculations specifying NIER levels in the inhabited areas where said levels are projected to be highest shall be prepared. NIER calculations shall also be prepared every time the adopted NIER standard changes. If calculated levels in either of these cases exceed eighty percent of the standard established by this section, the operator of the facility shall hire a qualified electrical engineer licensed by the state of California to measure the actual NIER levels produced. A report of these calculations, required measurements, if any, and the author's/engineer's findings with respect to compliance with the current NIER standard shall be submitted to the planning director within five years of facility approval and every five years thereafter. In the case of a change in the standard, the required report shall be submitted within ninety days of the date said change becomes effective.

D. Failure to supply the required reports or to remain in continued compliance with the NIER standard established by this section shall be grounds for revocation of the use permit or other entitlement.

Minor facilities — Basic requirements.

Minor facilities as defined in Section XXXX of this chapter may be installed, erected, maintained and/or operated <u>in any commercial or industrial zoning district where such antennas are permitted under this title</u>, upon the issuance of a minor conditional use permit, so long as all the following conditions are met:

A. The minor antenna use involved is accessory to the primary use of the property which is not a telecommunications facility.

B. **The combined effective radiated power radiated by all the antenna present on the parcel is less than one thousand five hundred watts.**

C. **The combined NIER levels produced by all the antennas present on the parcel do not exceed the NIER standard established in Section XXXXX of this chapter.**

D. **The antenna is not situated between the primary building on the parcel and any public or private street adjoining the parcel, so as to create a negative visual impact.**

E. **The antenna is located outside all yard and street setbacks specified in the zoning district in which the antenna is to be located and no closer than twenty feet to any property line.**

DRAFT

F. None of the guy wires employed are anchored within the area in front of the primary structure on the parcel.
G. **No portion of the antenna array extends beyond the property lines or into the area in front of the primary building on the parcel, so as to create a negative visual impact.**
H. At least ten feet of horizontal clearance exists between the antenna and any power lines, unless more clearance is required to meet CPUC standards.
I. All towers, masts and booms are made of a noncombustible material and all hardware such as brackets, turnbuckles, clips, and similar type equipment subject to rust or corrosion has been protected either by galvanizing or sheradizing after forming.
J. The materials employed are not unnecessarily bright, shiny or reflective and are of a color and type that blends with the surroundings to the greatest extent possible.
K. The installation is in compliance with the manufacturer's structural specifications and the requirements of the Uniform Building Code including Section 507.
L. The height of the facility shall include the height of any structure upon which it is placed, unless otherwise defined within this chapter.
M. No more than two satellite dishes are allowed on the parcel, one of which may be over three feet in diameter, but no larger than eight feet in diameter, with adequate screening, at the discretion of the planning director.
O. Any ground mounted satellite dish with a diameter greater than four feet that is situated less than five times its actual diameter from adjoining property lines has screening treatments located along the antenna's non-reception window axes and low-level landscape treatments along its reception window axes.
P. Any roof mounted panel antenna with a face area greater than three and one-half square feet shall be located so as to be effectively unnoticeable.
Q. Sufficient anti-climbing measures have been incorporated into the facility, as needed, to reduce potential for trespass and injury.
R. **The facility is located more than 500 feet *(OR 1500 FEET as needed in Nevada City)* from any residential dwelling unit, unless recognized as an exempt facility as set forth in Section xxxxx.**
S. No trees larger than twenty inches in diameter measured at four and one-half feet high on the tree would have to be removed.
T. **The site has an average cross slope of ten percent or less.**
V. **All utility lines to the facility from public or private streets shall be underground.**
W. If located within a recognized historic district, or on a structure recognized as a historic landmark, that adequate screening has been provided.
X. The general criteria set forth in this chapter are met.

DRAFT

NEVADA CITY TELECOM ORDINANCE PUBLIC WORKING GROUP
Feedback to Comments Submitted by
Baron Bettenhausn (Jones & Mayer), and Robert Ross (CMS)

DISCUSSION POINTS

- **REQUESTING NEW AMENDMENT TO BE ADDED: FCC CLAUSE**: Include a clause voiding relevant sections of the ordinance, or requiring modification, in the event of a regulatory change or overturning of the FCC Order (see San Diego County Ordinance). City has authority to change ordinance based on changes in federal regulations. The municipaltites could be operating in a very different environment in Fall 2020 (with FCC 18-111 and FCC 18-133 fully or partially vacated). Also include a **SEVERABILITY** clause.

17.150.020 Definitions:

7-Hills Business District - ALL ARE IN ACCEPTANCE THAT WE NEED TO INCLUDE: ***"7-Hills Business District"*** *means the areas shown on Exhibit A of the ordinance which codified the chapter; said exhibit is incorporated by this reference.* **– NEED TO INLCUDE EXHIBIT A.**

Base Station-
In response to Baron's comment, **do we keep the full definition or limit definition, as it may change in the future? KEEP ADDITION OF** (iv) …*categorical exclusion of radio frequency…***BUT A FULL DEFINITION IS NEEDED PER NEPA/CEQA.**

DAS: Keep final 2 sentences, we need the public who will be reading this ordinance to understand how fiber optic is used in the DAS. These "small cell" regulations and notice of permit requirements also include: DAS nodes (Distributed Antenna Systems) which applications often do not refer to small cells but which are, in fact (according to FCC definition*) small cells.

Effective Radiated Power (ERP) — the product of the power supplied to the antenna and the antenna gain in a given direction relative to a half-wave dipole antenna.

Small Cell: We would like the expanded definition to be included. **BARON: Please explain "Recitals." We want an "out" in case the law changes.** These "small cell" regulations and notice of permit requirements also include: strand-mounted small antennas that are on cables owned by telecom companies but that hover over the PROW and are suspended between utility poles, lampposts, etc.

Stealth: You state that there are signage limitations required by Feds. However, our city ordinance can and should include a requirement of a wireless warning sign at 5 ft level which we believe can still be a responsibility of the applicant, or at the very least a responsibility of the city. We can include in the ordinance that additional signs be placed on poles, in the opposite direction, to inform people on the sidewalk, what is installed on the pole. Should a

sign be damaged, Permitteeshall replace it within 5 business days. (Town of Hempstead NY required a 4 foot warning sign on each pole.)

Substantial Modification
3C: WE ADDED: *The proposed co-location or modification includes a change in power density (wattage), and changes in transmission on additional or different radio, microwave and millimeter wavelength frequencies. The Wireless Carrier must install only antennas, radios and other supporting equipment that have no chance of exceeding a total of 150 milliwatts of Effective Radiated Power (ERP) from the face of the antenna shroud, for all of the equipment operating at or connected to this WTF. (40 milliwattts emitting at the face of the antenna shroud is all that is needed)* **Clarification- Let's have a conversation then about power limits as it relates to the amount of energy output, heat generated, fire and public safety. Our ordinance CAN dictate how much energy output we allow per facility.**

Undergrounding of Accessory Equipment We agree definition of "underground" should be move to standards and requirements. However, we would like a definition of "underground" inserted. Can Robert provide one based on his comment: "*Underground Vaults have a different air flow requirement than is proposed. Recommend that the standard Telecom Vault specifications be used."* We understand that city regulations requiring all utility facilities (including antennas) to be placed underground would effectively prohibit wireless services because antennas have to be placed above ground in order to function. Regulations requiring all wireless equipment other than antennas to be placed underground would be permissible, so long as they are applied on a nondiscriminatory basis to other service providers, e.g. telco and cable companies. It is not clear what sorts of poles or other above ground antenna facilities a local government would have to allow access to in order to avoid being considered "effectively prohibiting wireless service." Examples of regulated underground for other industry: PG&E, Gas Stations

17.150.040 Wireless Telecommunications Facility Permit Requirements.

A. General Rule: Conditional Use Permit Required

Regarding the Table we added and Baron's comments – he states: "*You can't require CUP for new small cells in the ROW. Section 17.150.040(B) as originally drafted establishes administrative permits for the smallest subset required under federal law. This subsection (A) as originally drafted said everything else is a CUP…" and "It is not recommended to mention other Municipalities ordinances by name..." and "There is state law which allows city to regulate aesthetics. That does not supersede federal requirements to administratively permit certain facilities. As originally drafted, the ordinance limited the administrative permits as tightly as possible under existing law.*"

- We wouldn't mention the other municipalities- agreed.
- However, the table we included delineating which zones require a CUP vs. Administrative Permit and which zones are allowing/prohibiting small cells IS being used by a standing ordinance in Mill Valley and they are not in litigation

- So is Sonoma: **Conditional Use Permits**: Maintain that each wireless facility requires a Conditional Use Permit (Planning Dept, ZAB, or Public Works) followed by an encroachment permit which is reopened every 3 years (Sonoma City)
- And Petaluma: **Example as in the Petaluma Municipal Code, current through Ordinance 2674, passed November 19, 2018:**

  Definition: Telecommunications facility - small cell" means a telecommunications facility that is pole mounted to existing public utility infrastructure.

  Small cell facilities may be installed, erected, maintained and/or operated in any commercial or industrial zoning district where such antennas are permitted under this title, ***upon the issuance of a minor conditional use permit,*** *so long as all the following conditions are met:*

  A. The small cell antenna must connect to an ***already existing utility pole*** *that can support its weight.*

  B. All new wires needed to service the small cell must be installed within the width of the existing utility pole so as to ***not exceed the diameter and height of the existing utility pole.***

  C. ***All ground-mounted equipment not installed inside the pole must be undergrounded, flush to the ground, within three feet of the utility pole.***

  D. Each small cell must be at least ***one thousand five hundred feet away*** *from the nearest small cell facility.*

  E. Aside from the transmitter/antenna itself, ***no additional equipment may be visible****.*

  F. Each small cell must be ***at least five hundred feet away from any existing or approved residence.***

  G. An encroachment permit must be obtained for any work in the public right-of-way.

- **Laws, permits, and re-certifications need to be CONDITIONAL**, so that they may be revoked or modified if out of compliance or if/when federal law is modified. (Fairfax, Sonoma City)

Power Output

- We need our ordinance to put limits on energy power output and include 1500 feet distance between each facility. See legal discussion of power output on Legal Notes Document: Here is the summary of what we can include:

Localities can police the Quiet Enjoyment of Streets. Unfettered effective radiated power results in too much electromagnetic noise on our streets.

In order to preserve the quiet enjoyment of streets, a locality can pass an ordinance that limits the Effective Radiated Power (ERP) of Wireless Telecommunications Facilities (WTFs), using simple language, like the following:

"For any Close Proximity Microwave Radiation Antennas (CPMRA) Wireless Telecommunications Facility (WTF) that is

- installed in the public rights-of-way, or
- attached to any building, or
- has antennas installed at a height that is lower than 100 feet off the ground,

. . . the applicant **must** install **only** antennas, radios and other supporting equipment that **have no chance** of exceeding a total of **0.1 Watt of effective radiated power** from the face of the antenna shroud."

A cap of **0.1 Watt of ERP** for each qualifying CPMRA provides four main benefits:

1. Provides coverage for **Telecommunications service** for about 1/2 mile from the source antenna (more than **double** the distance of the industry-claimed need of 1,000 feet down the block)
2. **Does not effectively prohibit Telecommunications service, making this regulation legally defensible to wireless industry challenge**
3. Like City-regulated "speed limits," the ordinance can protect the quiet enjoyment of streets (part of the any city's police powers over **aesthetics**).
4. Complies with all FCC RF-EMR exposure guidelines.

Batched Application

Page 16 Sec. C - We are in complete opposition to Batched Applications. See Legal argument attached. **Batched Applications are not a requirement under the FCC Order.** In the discussion of batched applications, the Order makes clear that the applications can be either batched or individual.

Sec. D The City still holds the right to determine how applications are processed. We understand the issue of "shot clock". Batched applications may or may not help cities manage the shot clock but Nevada City adhere to the shot clock without Batched Applications.

17.150.050 Application for Wireless Telecommunications Facility Permit
General App Requirements

- A1 Regarding first mention of "Instant Application." Baron states: *"Instant application is intended to mean the application in front of the person looking at it."* This is a very poor reference and does not explain much. Baron: "*Cannot approve this revision as City may not*

require CUP for all applicaitons without violating federal law." Mill Valley, Sonoma and Petaluma, Fairfax are doing it.

- A7: We want that requirement to say that a list of frequencies because these are just equipment specifications. – See attachment
- A16: We agree it's ok to put definition of "categorical exclusion." Can you give us the language?
- A17: We agreed with Bob's comment of a knowledgeable individual- We want an independent consultant who is not connected to applicant and a qualified staff member.
- 23B: We agree to 1500 feet in favor of doubling the 300 to 600 feet.
- Shall notice installation of mock up at least 10 business days prior to installation to owners of record and occupants.
- 23B1: We don't agree with addition of your comment regarding PROW because a master lease could be entered into between city and telecom and now you have a lease. Seems like a loophole.
- C. 1. General Liability – Baron - What amount do you suggest? What are other cities doing? What certificates of coverage do you suggest we use?
- C. 10 (our added #10) – per Baron's question – what are these certifications – These are the certs for renewing the permit and Compliance Certifications. We have to monitor annual compliance to ensure and that the standards are being maintained. i.e. power outage, disruption, natural disaster, and FCC RF compliance. Per last comment regarding rejecting current apps from existing permit holders for others facilities, we understand.
- C12.c – we understand the fee is between carriers.
- C13. – We can remove Residential as a preference. See attachment. Why is 7 Hills prohibited? And how this determined?
- F. Independent Expert. 1. – Robert reminded us we need to include the RF Compliance Checklist
- F. Final paragraph – the checklist will include all requirements of a completed application, including RF Compliance report and Power Density Calculation worksheet for the Certification of Completion.

<u>Review Procedure</u>

- Review Procedure: A. Last sentence – per comment of staff internal discussion protection, sensitive information can be redacted, prior to public review
- Requirement for Facilities – A. We agree, we just put that there as background information supporting local authority. We agree it should be placed in Recitals rather than standards. However in the standards, we do leave language regarding not incommoding the PROW. See attachement.
- 3. Blending methods - refer back to the notes. We want the city to put another sign up.
- 4- Equipment: Go back and look at original wording for height.
- 5- Poles (b) **strand mounted NOT allowed in our city**
- (h) Accessory equipment under-grounding. Baron says FCC doesn't allow it. Regulations requiring all wireless equipment other than antennas to be placed underground would be permissible, so long as they are applied on a nondiscriminatory basis to other service providers, e.g. telco and cable companies. It is not clear what sorts of poles or other above ground

antenna facilities a local government would have to allow access to in order to avoid being considered "effectively prohibiting wireless service."

- 8- Obstructions- Baron, we agree with creating a minimum of visual obstructions but you cannot have a PHYSICAL obstruction to pedestrians or vehicles. Again, show us the law.
- 10- (f) We want you to refer back to request for city sign on the pole and we will edit this ordinance to remove all mention of screening so as to be consistent.
- 11- c- Accessory Equip- We need discussion of what Mill Valley is doing because it is in theirs
- 15- (b) Noise – See Effective Radiated Power and Noise in attachment.

General Guidelines

We added D. regarding 1500 ft separation – Baron's comment: "You can do this, as long as you understand that the farther out on the limb you go (stricter requirements) the more likely you are of being challenged. **There is no specific guidance (yet) on how far a separation is too far.** The more cities who go 1,500 the safer you will be (or at least the more likely someone else gets sued first giving you time to adjust IF necessary)."

Findings:

- Baron accepted E & F, and suggested we put back in G. and H. We agree.
- No Dangerous Condition: Refer back to our request for an additional City Sign
- Local Prohibitions and Preferences: B: - Baron says we can't prohibit: why is 7 Hill and Historical? and we CAN take out preference of Residential. See Mill Valley.
- Local Prohibitions and Preferences: E: If you are allowing the amendment that requires a CUP for the Scenic Corridor, we do a CUP for the other areas of the PROW.
- Local Prohibitions and Preferences: D: Maybe move this to the other section so it's not repeated twice – re: 1500 ft apart from each other. Move it to the Standards. Agree with Baron.

12.150.220 – Non-Conforming Wireless…

- Baron wrote in the ordinance "CEQA. This Ordinance is exempt from the California Environmental Quality Act (CEQA) under CEQA Guidelines section 15061 because CEQA only applies to projects **which have the potential to have a significant impact on the environment** and **because the environmental impact of each individual project will be analyzed at the time that the project is submitted**."
- Baron also wrote into the ordinance: "*There are no impacts of this ordinance which have the potential to cumulatively cause a significant effect on the environment because the city is so small, and it is not anticipated that there will be enough facilities to cause such an impact.*" **HOW COULD YOU POSSIBLY KNOW THAT? THIS SENTENCE IS COMPLETELY SUBJECTIVE AND NEEDS TO BE REMOVED.**
- We don't understand this comment: *"First, this CEQA finding applies to the discretionary adoption of this ordinance and not in regard to later applications submitted under this ordinance except to the extent that the City cannot later use discretion. But even then, the ordinance, as I had drafted it, gave city maximum discretion and only removed discretion where required by federal law. As such the City dis not exercising discretion in adopting procedural*

requirements consistent with federal requirements and the CEQA exemption 15061 is appropriate."

- We Agree: "*Second, while probably unnecessary, in abundance of caution, planning staff should probably conduct initial evaluation under NEPA and determine if an appropriate federal exemption or categorical exclusion applies."*
- WE NEED CUP'S TO ENSURE THAT THE EI STUDIES REGARDING NEPA/CEQA REQUIRED UNDER A CUP PROCESS WOULD BE INITIATED. Agree / Discuss: *"Third, the FCC had previously said that certain wireless facilities were exempt from local environmental or historical preservation review. They were challenged that they didn't have sufficient basis to make that ruling and they rolled back that blanket statement of exemption. That means that locally we must apply CEQA like we would in any other situation. What this means is that staff must conduct an initial Staff will first conduct an initial study to determine if CEQA applies under state law and whether there is a statutory or categorical exemption. Council will then use its authority make the official finding, which could include exemption up to requiring an EIR. However, there is good basis for believing that 15061 exemption would apply. This ordinance is mandated by federal law as such the City is not using discretion in adopting standards for administrative permits. Where it requires CUPS, than CEQA will be evaluated at that time. Ultimately, the CEQA finding is at Council's discretion based on advice from planning."*

REPORT TO CITY COUNCIL

City of Nevada City
317 Broad Street
Nevada City CA 95959
www.nevadacityca.gov

March 11, 2020

TITLE: Resolution 2020-XX, a Resolution of the City Council of the City of Nevada City Proclaiming a Local Emergency and Ratifying the Civil Defense and Disaster Council's Proclamation of a Local Emergency in the City of Nevada City and Request for Assistance Under the California Disaster Assistance Act

RECOMMENDATION: Pass Resolution 2020-XX, a Resolution of the City Council of the City of Nevada City Proclaiming a local emergency and ratifying the Civil Defense and Disaster Council's Proclamation of a local emergency in the City of Nevada City and request for assistance under the California Assistance Act.

CONTACT: Catrina Olson, City Manager

BACKGROUND / DISCUSSION:
The Governor of California declared a Statewide state of emergency due to the COVID-19 virus on Wednesday March 4, 2020. The County of Nevada followed suit and declared a local health emergency after the announcement of a death in Placer County due to COVID-19.

Safety personnel and the City Managers of Grass Valley and Nevada City participated in a phone conference on March 5, 2020 to discuss joint efforts and strategies relating to safety response and mitigation measures in minimizing the risk of exposure to COVID-19.

Several items were discussed, one of those being the delivery of a unified message regarding he COVID-19 virus to the community in a joint press release of the two agencies. The joint press release is attached and was sent out March 5, 2020 at 5PM. During the phone conference the agencies acknowledged the conditions of extreme risk to the safety of community members and property resulting from the spread of the COVD-19 virus and agreed to join in declaring a local emergency in Grass Valley and Nevada City and request assistance under the California Assistance Act.

The City's Municipal Code Section 2.44.050 (A)(1) authorizes the Director of Civil Defense and Disaster Council, Mayor Senum, to proclaim the existence of a local emergency to be followed by the City Council's ratification of the emergency through passing the attached Resolution. The date of the local emergency declaration is March 5, 2020.

ENVIRONMENTAL CONSIDERATIONS: Not applicable.

FISCAL IMPACT: Not applicable.

ATTACHMENTS:
- ✓ Resolution 2020-XX, a Resolution of the City Council of the City of Nevada City Proclaiming a Local Emergency and Ratifying the Civil Defense and Disaster Council's Proclamation of a Local Emergency in the City of Nevada City and Request for Assistance Under the California Disaster Assistance Act with Emergency Declaration
- ✓ Joint Press Release regarding the COVID-19 virus

RESOLUTION NO. 2020-XX

A RESOLUTION OF THE CITY COUNCIL OF THE CITY OF NEVADA CITY PROCLAIMING A LOCAL EMERGENCY AND RATIFYING THE CIVIL DEFENSE AND DISASTER COUNCIL'S PROCLAMATION OF A LOCAL EMERGENCY IN THE CITY OF NEVADA CITY AND REQUEST FOR ASSISTANCE UNDER THE CALIFORNIA DISASTER ASSISTANCE ACT

WHEREAS, Nevada City Municipal Code Section 2.44.030, et seq. creates the Civil Defense and Disaster Council of the City of Nevada City, and empowers the Civil Defense and Disaster Council to develop and implement emergency and mutual aid plans and to proclaim the existence or threatened existence of, conditions of disaster or of extreme peril to the safety of persons and property within the City of Nevada City that result in a local emergency; and

WHEREAS, Section 2.44.050 (A)(1) of the Nevada City Municipal Code empowers the Director of the Civil Defense and Disaster Council to proclaim the existence, or threatened existence, of a local emergency if the City Council is unavailable and requires the City Council to ratify the proclamation within at the earliest practicable time by the City Council; and

WHEREAS, conditions of extreme peril to the safety of persons or property have arisen within the City of Nevada City as a result of the spread of the COVID-19 virus throughout the State of California, including a death due to the virus in neighboring Placer County on Wednesday, March 4; and

WHEREAS, the Governor of California declared a Statewide state of emergency due to the COVID-19 virus on Wednesday, March 4; and

WHEREAS, the Director of the Civil Defense and Disaster Council did proclaim the existence of a local emergency within the City of Nevada City on the 5th Day of March, 2020, a copy of which is attached hereto as "Exhibit A" and incorporated herein by this reference; and

WHEREAS, the City Council does hereby find the aforesaid conditions of extreme peril did warrant and necessitate the proclamation of the existence of a local emergency in the City of Nevada City; and

WHEREAS, the City Council does hereby find that local resources are unable to cope with the effects of said emergency; and

NOW, THEREFORE, IT IS HEREBY RESOLVED AND ORDERED, that the City Council hereby proclaims a local emergency due to the existence or threatened existence of conditions of disaster or of extreme peril to the safety of persons and property within the City of Nevada City; and

IT IS FURTHER RESOLVED AND ORDERED, that the Director of the Civil Defense and Disaster Council's Proclamation of Existence of a Local Emergency and request to the Governor to provide assistance through the California Disaster Assistance Act, as issued by the Director of Emergency Services, is hereby ratified and confirmed; and

IT IS FURTHER RESOLVED AND ORDERED, that the local emergency shall be deemed to continue to exist until its termination is proclaimed by the City Council of the City of Nevada City; and

IT IS FURTHER RESOLVED AND ORDERED, that during the existence of said local emergency the powers, functions and duties of the Civil Defense and Disaster Council of the City of Nevada City and its Director of Civil Defense and Disaster shall be those prescribed by state law, ordinances, and resolutions of this City,

IT IS FURTHER ORDERED, that a copy of this Resolution be forwarded to the State Director of the Office of Emergency Services.

IT IS FURTHER ORDERED, that Reinette Senum, Director of Civil Defense and Disaster of the City of Nevada City, is hereby designated as the authorized representative of the City of Nevada City for the purpose of receipt, processing, and coordination of all inquiries and requirements necessary to obtain available State and Federal assistance.

PASSED AND ADOPTED by the City Council of the City of Nevada City at a regular meeting of the City Council held the 11th of March 2020, by the following vote:

AYES:

NOES:

ABSENT:

ABSTAIN:

_____

Reinette Senum, Mayor
City of Nevada City

ATTEST:

_____

Niel Locke, City Clerk
City of Nevada City

APPROVED AS TO FORM:

_____

Crystal V. Hodgson, City Attorney
City of Nevada City

Proclamation of Existence of a Local Emergency by the City of Nevada City's Director of Civil Defense and Disaster Council

I, Reinette Senum, as the City of Nevada City's Director of Civil Defense and Disaster Council, under the authority provided to me by Nevada City Municipal Code Section 2.44.050 (A)(1), do hereby proclaim the existence of a local emergency this 5th day of March 2020, which emergency exists because conditions of extreme peril to the safety of persons or property have arisen within the City of Nevada City as a result of the spread of the COVID-19 virus throughout the State of California, including a death due to the virus in neighboring Placer County on Wednesday, March 4.

Executed on March 5, 2020, at Nevada City, California.

Reinette Senum

Reinette Senum, Mayor and
Director of Civil Defense and Disaster Council of Nevada City, CA

CITY OF GRASS VALLEY
CITY OF NEVADA CITY

JOINT PRESS RELEASE

March 5, 2020

As news and concerns about the novel coronavirus (COVID-19) continue to build up, we want our citizens to know the City of Grass Valley and Nevada City are taking every precaution necessary to ensure their safety. While there are no known cases of the virus in Nevada County, our first responders and public safety agencies are getting fully prepared *should* this impact our community. Our Fire and Police Departments are fully staffed, and each City has prepared a Declaration of Emergency to ensure we can obtain equipment and resources in the most timely and effective manner so our emergency personnel are protected and prepared.

It is important for our community members to understand the important role they play in this readiness plan. To help prevent the spread of germs and any illness, all standard precautions should be observed with care in the coming weeks. Remember to wash your hands often for at least 20 seconds with soap and warm water, stay home if you feel ill, and avoid touching your eyes, nose and mouth. The Nevada County Public Health Department has activated Connecting Point's Call Center to answer community questions and to provide up-to-date information about the virus and available resources, simply dial 2-1-1 to reach a representative.

We understand that everyone's worried and we encourage our community members to follow this evolving situation via reliable sources such as Nevada County Public Health (https://www.mynevadacounty.com/551/Public-Health).

REPORT TO CITY COUNCIL

City of Nevada City
317 Broad Street
Nevada City CA 95959
www.nevadacityca.gov

March 11, 2020

TITLE: Ordinance No. 2020-XX, Adding Section 2.04.030 "Conduct While Addressing the City Council" and Section 2.36.075 "Conduct While Addressing the Planning Commission" to the Nevada City Municipal Code

RECOMMENDATION: Waive reading of Ordinance, read by title only and introduce for first reading Ordinance No. 2020-XX, an Ordinance of the City of Nevada City adding Section 2.04.030 "Conduct While Addressing the City Council" and Section 2.36.075 "Conduct While Addressing the Planning Commission" to the Nevada City Municipal Code.

CONTACT: Catrina Olson, City Manager
Crystal Hodgson, City Attorney

BACKGROUND / DISCUSSION:
At times during City Council and Planning Commission meetings, members of the public are "disruptive" by speaking out-of-turn or off subject, refusing to cease speaking when their time is up or when it is no longer time for public comment, speaking negatively about other members of the public or verbally attacking City staff or officials. Such conduct is not protected by the Brown Act or under free speech jurisprudence and it impedes the orderly conduct of such public meetings.

In an effort to create efficiency in running meetings and expectation of meeting decorum, the City Council adopted Resolution 2016-16 City Council Standards and Procedures, which includes Section 9, Procedures for the Conduct of Public Meetings, Section 11, Decorum and Section 12, Enforcement of Decorum. This establishes the procedures by which the Mayor and Council members conduct the public meetings. The proposed ordinance would expand on this policy and codify it into the Municipal Code.

The proposed Ordinance would protect the Free Speech rights of all meeting attendees, while prohibiting disruptive public conduct, so the City Council is able to conduct the necessary City business at public meetings, by adding Section 2.040.030 and 2.36.075 to the Nevada City Municipal Code which defines and prohibits "disruptive conduct" while addressing the City Council and Planning Commission during public meetings, and establishes procedures for the meeting chairs to follow to address disruptive members of the public during public meetings. The City of Nevada City has the authority under its police power to enact this ordinance to protect the public peace, morals and welfare of the City, Cal. Const. art. XI, § 7.

City staff recommends that the City Council hold a first reading of the Ordinance.

ENVIRONMENTAL CONSIDERATIONS: Not applicable.

FISCAL IMPACT: Not applicable.

ATTACHMENTS:
- ✓ Ordinance No. 2020-XX Adding Section 2.04.030 "Conduct While Addressing the City Council" and Section 2.36.075 "Conduct While Addressing the Planning Commission" to the Nevada City Municipal Code

ORDINANCE NO. 2020-XX

AN ORDINANCE OF THE CITY OF NEVADA CITY ADDING, SECTION 2.04.030 "CONDUCT WHILE ADDRESSING THE CITY COUNCIL" AND SECTION 2.36.075 "CONDUCT WHILE ADDRESSING THE PLANNING COMMISSION" TO THE NEVADA CITY MUNICIPAL CODE

WHEREAS, the City of Nevada City has the authority under its police power, to enact regulations for the public peace, morals, and welfare of the city, Cal. Const. art. XI, § 7; and

WHEREAS, the City Council of the City of Nevada City finds that conduct by persons addressing the City Council during City Council meetings or the Planning Commission during Planning Commission meetings which interferes with, disrupts, disturbs or otherwise impedes the orderly conduct of such meetings, prevents the City Council and the Planning Commission from conducting their business, and inhibits the ability of Nevada City's citizens to petition their government for the redress of grievances; and

WHEREAS, City Council and Planning Commission meetings are limits public fora, White v. Norwalk, 900 F.2d 1421 (9th Cir. 1990), and the Council may adopt regulations related to conduct at City Council and Planning Commission meetings that are reasonable to the purpose of the forum and viewpoint neutral. Norse v. City of Santa Cruz, 629 F.3d 966, 975 (9th Cir. 2010); and

WHEREAS, prohibited conduct at public meetings must be limited to conduct that actually disrupts the orderly operation of such meetings. Acosta v. City of Costa Mesa, 718 F.3d 800 (2013).

NOW THEREFORE, THE CITY COUNCIL OF THE CITY OF NEVADA CITY DOES ORDAIN AS FOLLOWS:

SECTION 1. Section 2.04.030 of the Nevada City Municipal Code entitled "Conduct While Addressing the City Council" is hereby added to read as follows:

"2.04.030. Conduct while addressing the city council.

(a) Any person who engages in disorderly behavior that actually disrupts, disturbs or otherwise impedes the orderly conduct of any city council meeting shall, upon an order by the presiding officer or a majority of the city council, be barred from further audience before the city council during that meeting, pursuant to the provisions of subdivision (c), below.

(b) Disorderly behavior under subdivision (a) may include, but is not limited to, the following:

(1) Speaking without being recognized by the presiding officer.

(2) Continuing to speak after the allotted time has expired.

(3) Speaking on an item at a time not designated for discussion by the public of that item.

(4) Throwing objects.

(5) Speaking on an issue that is not within the jurisdiction of the city council.

(6) Attempting to engage the audience rather than the city council.

(7) Refusing to modify conduct after being advised by the presiding officer that the conduct is disrupting the meeting, or disobeying any other lawful order of the presiding officer or a majority of the city council.

(c) Enforcement. The rules of conduct while addressing the city council set forth above shall be enforced in the following manner:

(1) Call to order and warning to desist. Whenever practicable, the presiding officer or a majority of the city council shall give a warning to the person who is breaching the rules of conduct to be orderly and to comply with the rules of conduct hereunder. Such a warning shall articulate the rule of conduct being violated and the manner in which the person must comply.

A warning shall not be necessary when it would not be effective under the circumstances, including when, but not limited to, the disturbance is such that the warning cannot be heard above the noise, or the conduct of the person or persons constitutes an immediate threat to public safety, such as the throwing of objects or specific threats of harm and the apparent, present ability to carry out such threats. A warning shall also not be necessary when an individual violates the rules of conduct more than once during a council meeting, or continuously violates the rules of conduct council meeting after council meeting.

(2) Order barring person from meeting. A person who engages in disorderly behavior shall be barred from the remainder of that council meeting by the presiding officer or a majority of the city council when that person: (i) continues the disorderly behavior after receiving a warning pursuant to subdivision (c)(1); (ii) ceases the disorderly behavior upon receiving a warning pursuant to subdivision (c)(1), but later in the same council meeting resumes such disorderly behavior; or (iii) engages in disorderly behavior and no warning is practicable under the circumstances, pursuant to subdivision (c)(1).

The continuation of disorderly behavior after receiving a warning, repeated disorderly behavior during a council meeting, disorderly behavior at council meeting after council meeting, or disorderly behavior that is so significant that a warning cannot be given, constitutes the type of

behavior that actually disrupts, disturbs or otherwise impedes the orderly conduct of a city council meeting.

(3) Removal. If the person barred from the meeting does not voluntarily remove him/herself upon being instructed to do so by the presiding officer or a majority of the city council, the presiding officer or the majority of the city council may direct the sergeant-at-arms to remove that person from the council chambers.

(d) The following conduct is unlawful and shall be punishable as a misdemeanor:

(1) Continuing to engage in disorderly conduct, which disrupts, disturbs or otherwise impedes the orderly conduct of any city council meeting, after receiving a warning pursuant to subdivision (c)(1) of this section.

(2) Refusing to leave a city council meeting after being directed to do so pursuant to subdivision (c)(2) of this section.

(3) Returning to a council meeting after being barred, removed or directed to leave such meeting pursuant to subdivisions (c)(2) and (c)(3) of this section."

SECTION 2. Section 2.36.075 of the Nevada City Municipal Code entitled "Conduct While Addressing the Planning Commission" is hereby added to read as follows:

"2.36.075. Conduct while addressing the planning commission.

(a) Any person who engages in disorderly behavior that actually disrupts, disturbs or otherwise impedes the orderly conduct of any planning commission meeting shall, upon an order by the presiding officer or a majority of the planning commission, be barred from further audience before the planning commission during that meeting, pursuant to the provisions of subdivision (c), below.

(b) Disorderly behavior under subdivision (a) may include, but is not limited to, the following:

(1) Speaking without being recognized by the presiding officer.

(2) Continuing to speak after the allotted time has expired.

(3) Speaking on an item at a time not designated for discussion by the public of that item.

(4) Throwing objects.

(5) Speaking on an issue that is not within the jurisdiction of the planning commission.

(6) Attempting to engage the audience rather than the planning commission.

(7) Refusing to modify conduct after being advised by the presiding officer that the conduct is disrupting the meeting, or disobeying any other lawful order of the presiding officer or a majority of the planning commission.

(c) Enforcement. The rules of conduct while addressing the planning commission set forth above shall be enforced in the following manner:

(1) Call to order and warning to desist. Whenever practicable, the presiding officer or a majority of the planning commission shall give a warning to the person who is breaching the rules of conduct to be orderly and to comply with the rules of conduct hereunder. Such a warning shall articulate the rule of conduct being violated and the manner in which the person must comply.

A warning shall not be necessary when it would not be effective under the circumstances, including when, but not limited to, the disturbance is such that the warning cannot be heard above the noise, or the conduct of the person or persons constitutes an immediate threat to public safety, such as the throwing of objects or specific threats of harm and the apparent, present ability to carry out such threats. A warning shall also not be necessary when an individual violates the rules of conduct more than once during a planning commission, or continuously violates the rules of conduct council meeting after planning commission.

(2) Order barring person from meeting. A person who engages in disorderly behavior shall be barred from the remainder of that planning commission by the presiding officer or a majority of the planning commission when that person: (i) continues the disorderly behavior after receiving a warning pursuant to subdivision (c)(1); (ii) ceases the disorderly behavior upon receiving a warning pursuant to subdivision (c)(1), but later in the same commission meeting resumes such disorderly behavior; or (iii) engages in disorderly behavior and no warning is practicable under the circumstances, pursuant to subdivision (c)(1).

The continuation of disorderly behavior after receiving a warning, repeated disorderly behavior during a planning commission meeting, disorderly behavior at planning commission after planning commission, or disorderly behavior that is so significant that a warning cannot be given, constitutes the type of behavior that actually disrupts, disturbs or otherwise impedes the orderly conduct of a planning commission meeting.

(3) Removal. If the person barred from the meeting does not voluntarily remove him/herself upon being instructed to do so by the presiding officer or a majority of the planning commission, the presiding officer or the majority of the planning commission may direct the sergeant-at-arms to remove that person from the council chambers.

(d) The following conduct is unlawful and shall be punishable as a misdemeanor:

(1) Continuing to engage in disorderly conduct, which disrupts, disturbs or otherwise impedes the orderly conduct of any planning commission meeting, after receiving a warning

pursuant to subdivision (c)(1) of this section.

(2) Refusing to leave a planning commission meeting after being directed to do so pursuant to subdivision (c)(2) of this section.

(3) Returning to a planning commission after being barred, removed or directed to leave such meeting pursuant to subdivisions (c)(2) and (c)(3) of this section."

SECTION 3. Severability. If any portion of this ordinance is found to be unenforceable, each such provision shall be severed, and all remaining portions of this ordinance shall be enforced to the maximum extent legally permissible.

SECTION 4. Effective Date. The City Clerk shall certify to the adoption of this Ordinance and shall cause a copy of the same to be published at least once in the official newspaper of the City within fifteen (15) days after its adoption. This Ordinance shall become effective on the 31st day after adoption.

PASSED AND ADOPTED at the regular meeting of the City Council of the City of Nevada City on the ___ day of _____, 2020 by the following vote:

AYES:

NOES:

ABSENT

ABSTAIN:

_____
Reinette Senum, Mayor

ATTEST:

_____
Niel Locke, City Clerk

APPROVED AS TO FORM

_____
Crystal V. Hodgson, City Attorney

CITY MANAGER'S UPDATE MARCH 6, 2020

The City of Nevada City is working hard on a variety of projects and activities to serve the community. This correspondence provides the City Council and citizens with a periodic update on citywide activities and events.

~ Catrina Olson, City Manager

FAREWELL

- **Scott Clendenen**
  Join me in saying farewell to a dedicated employee that the Nevada City was lucky to have as a public servant since 2013. Officer Clendenen started with the City as a part-time Reserve Officer for the Nevada City Police Department on February 17, 2013. On August 28, 2014 the Police Department had a fortunate gain, the City offered Officer Clendenen a full-time position. Officer Clendenen provided excellent public service with a smile and positive attitude for almost 4 years. In May 2018 Officer Clendenen retired but loved the City so much decided to stay on for special assignments in the Police Department. He has now decided to move on and is leaving the City to move to Georgia to be near his family. What a great time we've all had working with Scott Clendenen. He will be missed by all. Farewell to Officer Clendenen thank you for all of the fun, memories and excellent public service to the City of Nevada City. Good luck and stay in touch with us.

COMPLETED AND ONGOING CITY PROJECTS

- **Residential Chipping Program**
  The program has slowed down but is still available. Take advantage of this program. Just because fire season is at a close, doesn't mean that the vegetation clean up shouldn't continue throughout the year.

- **New Fire Engine**
  The new Nevada City Fire Engine is here, it arrived on February 27, 2020. Come see it at the City's Birthday Party on April 16, 2020 on Broad St.

- **PG&E Power Line Project**
  Division Chief Goodspeed has continued working with PG&E regarding a power line that runs through the Deer Creek Canyon west of Nevada City that is lacking fire clearance and creating a hazard. Nevada City Fire Department has a working group consisting of PG&E, immediate property owners, City and County elected officials, local fire districts and Firewise Communities. They are currently working with affected property owners to get permission to do the clearing under the lines. This project is a work in progress.

- **Police Department Activity**
  The Police Chief Ellis is currently working on coordinating a clean-up day at Sugarloaf Mountain. The Police Department received $3,000 from Rotary to use for new hires.

- **Providence Mine Vegetation Clean-Up**
  Division Chief Goodspeed with the Washington Ridge Crew has completed 50% of the vegetation clearing for a fuel break at Providence Mine past the gate to the creek.

- **Unenforced Smoking Areas Pilot Project**
  Signs and receptacles are in…the unenforced smoking area pilot project is in full swing. An update on this program is scheduled for the March 25, 2020 Council meeting.

- **Commercial Street and York Street One-Way Pilot Project**
  At the January 8, 2020 meeting Council voted to permanently make Commercial Street and York Street one way. The RFP for the underground utility work will go out next week and should go to Council for bid award at the March 25, 2020 meeting. City Staff met with Architect Rebecca Coffman and Bethany, a member of FoNC, to discuss updating the Commercial streetscape rendering considering the feedback provided at the January 23, 2019 meeting.

- **Wastewater Treatment Plant and Water Treatment Plant Activity**
  As part of the Wastewater Treatment Compliance with the State Regional Water Board Administrative Civil Liability several projects for plant modification are happening such as; (1) mechanical clarifier weir washers, (2) activated sludge blower pipe repairs, (3) filtration process flow modulation/equalization basin repairs, (4) engineering consulting for treatment process optimization, (5) sludge wasting day tank, and (6) improvements to the belt press. BLM received notification of grant funding for vegetation management. Currently BLM is prioritizing projects and will be working with the City to clean-up the vegetation at the water treatment plant.

- **South Pine Street Railing, Sidewalks and Wall Rebuild**
  The sidewalk replacement portion of the project is complete. The top railing and paneling are complete. The final step will be to add a mid-rail on the railing that doesn't require paneling.

- **Solar at the Old Airport**
  Staff, with City Council input has added the final City desired solar objectives to the RFP. The City is continuing to working with SEED and Sustainable Committee members to finalize the RFP for distribution to potentially find developers interested in a solar project at the Old Airport.

- **Planning**
  Currently reviewing an application for Purist a volatile manufacturing business. Also under review are two applications for amendment to existing cannabis businesses. Highest health is changing from ethanol extraction to hydrocarbon and Emerald Bay is adding two new principles to their business.

- **Proposition 64 Public Health and Safety Grant Program**
  Police Chief Ellis submitted a letter of intent on March 6, 2020 that Nevada City would be participating in submitting for grant funding associated to Cannabis business and its impact on the local agency as it relates to public health and safety. The proposal for submission is due April 4, 2020.

- **Proposition 68 Per Capita Grant Program**

The City submitted a questionnaire in June 2019 to receive determination if the City is eligible for funding through this program. The City is eligible to receive recreational funds in the ratio of the City's population as to the combined total of the State's population with the minimum allocation of $200,000. The City continues to wait to hear about the funding.

- **FEMA Firefighter Assistance Grant**
  Division Chief Goodspeed is submitting a grant application to assist the Fire Department in replacing Self Contained Breathing Apparatus (SCBA). The grant is due no later than March 13, 2020.

- **Picnic Area Bathroom Remodel**
  This project has been started and a portion of the demolition has occurred. The walls will be cut out next week. Expected completion of the project June 1, 2020.

- **Community Development Block Grant (CDBG) Curb Cuts for American Disabilities Act (ADA)**
  The bid for the curb cut work was awarded at the February 12, 2020 City Council meeting. The Contractors are currently working on sidewalks and curb cuts.

- **Department of Public Works Dump Truck Replacement**
  The replacement dump truck for the one that was stolen from the Corporation Yard on December 31, 2019 has been ordered along with a new snowplow and sander attachment.

- **Department of Public Works**
  Public Works Superintendent, Bubba Highsmith is working on bids for partial replacement of the Firehouse #2 roof. Public Works Superintendent is exploring options for a Christmas Tree this upcoming holiday season and will be bringing these options forward to Council at the March 25, 2020 meeting.

- **Clampers Square**
  The Nevada County Narrow Gauge Railroad Museum has done a lot of work installing the Rail Exhibit at Clampers Square. The rail is in, the sidewalk is complete, the Kiosk is being installed and the crosswalk will be completed within the next two weeks.

- **Boulder Street Sidewalk Replacement and Waterline**
  Replacement of the Boulder Street sidewalk continues. The rock wall is currently being built. This project will be complete in approximately 1 month. Continued detours around Boulder Street during the project work is still underway. One lane is being left open whenever possible. The installation of the Boulder St. waterline replacement should be complete within the next two weeks.

- **Parking Meter Rates and Employee Parking Permits**
  DPW has completed the programming increase the fees at the meters. All meters are now $.50/hr. At the February 12, 2020 Council meeting an increase to the Employee Parking Permit was approved to go from $15/mo. to $40/mo.

- **Sugarloaf**
  There have been volunteers working with BYLT chipping the cleared brush there has also been burning vegetation created by the trail alignment. The Recreational Trail Program (RTP) grant for funding to be used toward the installation of the trail has

been submitted. The City should hear if funding will be awarded sometime this summer. Staff is currently working with Nevada City Engineering for easement permits.

- **Clark Street**
  Staff is currently working on a survey and site plan for the City owned parking area off Clark Street. Staff is planning a meeting with neighborhood residents on both matters for input. Staff will be reaching out to residents to set a meeting to gather input on both of these items.

Upcoming City Projects

- **Sign Committee**
  Council Members, Valerie Moberg and Duane Strawser met with City Manager, Catrina Olson, to discuss "sprucing" up and adding new signage in Nevada City. Staff is working on reviewing intersections on Commercial Street to begin updating signage. Currently the Department of Public Works Superintendent, Bubba Highsmith is working on a phased plan to begin replacing City street signs and adding directional signage. This is scheduled to be presented to Council at the March 25, 2020 meeting. Stay tuned.

- **Tabletop Crosswalks**
  At the Planning Commission, meeting on February 20, 2020 a design for tabletop crosswalks was approved at Railroad Avenue. The approved design will be used for slowing traffic on Zion Street and Sacramento Street. The focus will be on the crosswalk near the Tour of Nevada City Bike Shop, the crosswalk at Zion Street and Sacramento Street and the crosswalk at Forest Hill Charter School. Staff will be looking into tabletop crosswalks and flashing signage.

- **Water Bottle Station**
  Coming before summer staff is working towards changing out the water fountain at the swimming pool with a water bottle filling station.

- **Parking Structure at Spring Street**
  The City Council and the Parking Committee have reviewed a very initial design schematic for a parking structure at Spring Street. Staff has met with Bruce Boyd and has discussed next steps. The City will be putting out an RFQ for an architect as the City moves forward and the City Manager is researching funding avenues. **Bicycle Parking – Spring 2020**

- **Nevada Street Bridge Rehabilitation**
  The Bridge project will likely start this summer with City funded utility relocations (which can be reimbursed later when bridge is fully funded). This will ensure that the bridge is programmed for full funding in November 2020 (the strategy is to start construction which moves us to the front of the line for funding).

Administration

- **COVID-19**
  City staff have been communicating and working jointly with Grass Valley and Nevada County to keep the community and City staff updated on the COVID-19 virus, and how to mitigate the chances of contracting/coming into contact with the virus.

- **Budget**
  Budgeting season is here. The City Council will adopted the budget calendar at the February 25, 2020 meeting. Work on the FY 20/21 budget is underway. The budget workshop will be held May 14, 2020 at 9am.

- **Extreme Weather Shelter**
  The extreme weather shelter agreement became active November 1, 2019. The agreement runs through March 31, 2019. The Extreme Weather Shelter was open at the Veteran's Building January 28-29, 2020 for the Point in Time Count. It also opened again on February 2-3, 2020 for extreme weather conditions at the Veteran's Building.

- **Audited Financials FY 18/19**
  The audited financials for FY 18/19 will be presented at the March 25, 2020 by the audit Firm R.J. Ricciardi, Inc.

- **Campaign Season is Almost at it's Conclusion**
  Candidates in the running….David "Sparky" Parker – Incumbent, Reinette Senum – Incumbent, Daniela Fernandez, Rick Ewald, Douglass Fleming, Lorraine Reich and Niel Locke for City Clerk – Incumbent. Some members of staff have met with a couple of the candidates running for Council. As of the last update the top votes received were by Doug Flemming, in second Daniela Fernandez and up for the 3rd seat is incumbent Reinette Senum. Votes are still being counted, anything can change. Except Niel Locke will be the City Clerk for another 4 years!

COMING SOON….

- **Website Refresh…coming soon**
  City Manager, Catrina Olson, Administrative Services Manager, Loree' McCay, and Parks & Recreation Manager, Dawn Zydonis, will be working with MunicipalCMS, LLC. on an update and "refresh" to the Nevada City website.

- **Ordinance for No Camping in Certain in City Locations – On Hold**
  Police Chief Ellis is looking into creating an Ordinance similar to an Ordinance Yuba County put into place implementing camping in certain areas of the City where there is potential for public safety health risks such as contaminated waterways and fire.

- **Pre-Treatment Discharge Ordinance for Wastewater – April 2020**
  The City will be looking to setting regulations for discharge related to business/industry that have significant impacts on the Wastewater Treatment Plant. This will help create processing efficiencies for the City's plant facility. The City has sent letters to heavy commercial dischargers to begin the discussion about mitigating impacts on the Wastewater Treatment Plant. Currently the City is in sampling mode collecting data throughout Nevada City to help better inform.

- **Soap Box Derby**
  Soap Box Derby has been handed off (by Rich Bodine) to Nevada County Search and Rescue. This organization has both the volunteers to adequately staff the event and will be the recipient of the fundraising.

DON'T FORGET AND MISCELLANEOUS INFO

- **City Birthday**
  Currently staff with Council Member Parker are working on the details to throw another awesome City Birthday Party. There is going to be a silent auction during the birthday party for old Parks and Recreation playground equipment. Tentative date Thursday April 16, 2020. Mark your Calendars!!

- **Vote for the Nevada City Film Festival**
  Nevada City Film Festival (NCFF) has been nominated in USA Today's 2020 10Best Readers Choice travel awards. Their expert panel selected NCFF as a contender for Best Film Festival winners will be announced on 10Best on Friday, March 13th.

- **Home and Garden Show**
  The First Friday Night Artwalk begins May 1, 2020 and will be held June 5, July 3 and August 7, 2020.

- **Home and Garden Show**
  The home and garden show will be held May 16th and 17th around Nevada City. Soroptimist will be providing a shuttle from the City's Clark Street parking lot for those areas where there isn't parking.