REGULAR CITY COUNCIL MEETING
MEETING AGENDA
WEDNESDAY, April 11, 2018

Closed Session – 6:15 PM
Regular Meeting - 6:30 PM

City Hall – Beryl P. Robinson, Jr. Conference Room
317 Broad Street, Nevada City, CA 95959

MISSION STATEMENT
The City of Nevada City is dedicated to preserving and enhancing its small town character and historical architecture while providing quality public services for our current and future residents, businesses and visitors.

Duane Strawser, Mayor

Reinette Senum, Council Member **David Parker, Vice Mayor**
Evans Phelps, Council Member **Valerie Moberg, Council Member**

The City Council welcomes you to its meetings which are scheduled at 6:30 PM on the 2nd and 4th Wednesdays of each month. Your interest is encouraged and appreciated. This meeting is recorded on DVD and is televised on local public television Channel 17. Other special accommodations may be requested to the City Clerk 72 hours in advance of the meeting. Please turn off all cell phones or similar devices. Action may be taken on any agenda item. Agenda notices are available at City Hall. Materials related to an item on this Agenda submitted to the Council after distribution of the agenda packet are available for public inspection in the City Hall at 317 Broad Street, Nevada City, CA during normal business hours.

ANY MEMBER OF THE PUBLIC DESIRING TO ADDRESS THE COUNCIL ON ANY ITEM ON THIS AGENDA: After receiving recognition from the Mayor, give your name and address, and then your comments or questions. Please direct your remarks to the Councilmembers. In order that all interested parties have an opportunity to speak, please limit your comments to the specific item under discussion. All citizens will be afforded an opportunity to speak, consistent with their Constitutional rights. Time limits shall be at the Mayor's discretion.
IF YOU CHALLENGE the Council's decision on any matter in court, you will be limited to raising only those issues you or someone else raised at the meeting or Public Hearing described on this agenda, or in written correspondence delivered to the City Council at, or prior to, the meeting or Public Hearing.

CLOSED SESSION – 6:15 PM

1. Pursuant to Government Code Section 54957(b)(1) a closed session is requested with City Manager Catrina Olson and City Attorney Hal DeGraw on a personnel matter.

REGULAR MEETING – 6:30 PM - Call to Order

Roll Call: Moberg, Phelps, Senum, Vice Mayor Parker, & Mayor Strawser

PLEDGE OF ALLEGIANCE

PROCLAMATIONS:

PRESENTATIONS:

BUSINESS FROM THE FLOOR

1. **PUBLIC COMMENT**

   Under Government Code Section 54954.3, members of the public are entitled to address the City Council concerning any item within the Nevada City Council's subject matter jurisdiction. Comments on items NOT ON THE AGENDA are welcome at this time. Normally, public comments are limited to no more than three minutes each. **Except for certain specific exceptions, the City Council is prohibited from discussing or taking action on any item not appearing on the posted agenda.**

2. **COUNCIL MEMBERS REQUESTED ITEMS AND COMMITTEE REPORTS:**

3. **CONSENT ITEMS:**

All matters listed under the Consent Calendar are to be considered routine by the City Council and will be enacted by one motion in the form listed. There will be no separate discussion of these items unless, before the City Council votes on the motion to adopt, members of the Council, City staff or the public request specific items to be removed from the Consent Calendar for separate discussion and action.

A. **Subject:** Accounts Payable Activity Report – March 2018
Recommendation: Receive and file.

B. **Subject:** Nevada City Farmer's Market Street Closure Request
Recommendation: Review and authorize Nevada City Farmers Market street closure request per application.

C. **Subject:** 3rd Quarter 2017 Sales Tax Update
Recommendation: Receive and file.

D. **Subject:** Award Of Contract For Adams Street And Nile Street Improvements In Nevada City
Recommendation: Pass Resolution 2018-XX Awarding a contract to Simpson & Simpson Inc. in the amount of $404,763.00 plus $35,000.00 contingencies for Adams Street and Nile Street Improvements in Nevada City and authorize the Mayor to sign.

E. **Subject:** Award Of Contract For Sewer Replacement At Sacramento Street In Nevada City
Recommendation: Pass Resolution 2018-XX Awarding a contract to Escheman Construction in the amount of $42,818.63 plus $8,000.00 contingencies for Sewer Replacement at Sacramento Street in Nevada City and authorize the Mayor to sign.

F. **Subject:** Award Of Contract For Water Replacement At Jordan Street In Nevada City
Recommendation: Pass Resolution 2018-XX Awarding a contract to C&D Contractors, Inc. in the amount of $26,530.00 plus $4,000.00 contingencies for Water Replacement at Jordan Street in Nevada City and authorize the Mayor to sign.

G. **Subject:** A Resolution Of The City Council Of Nevada City To Adopt A Determination Of A CalPERS Member's Industrial Disability Retirement For Police Officer Shane Franssen
Recommendation: Pass Resolution 2018-XX to adopt a determination of CalPERS member's industrial disability retirement for Police Officer Shane Franssen.

H. **Subject:** A Resolution Of The City Council Of Nevada City To Adopt A Determination Of A CalPERS Member's Industrial Disability Retirement For Police Officer Gary Scott Clendenen

Recommendation: Pass Resolution 2018-XX to adopt a determination of CalPERS member's industrial disability retirement for Police Officer Gary Scott Clendenen.

I. **Subject:** Award Of Contract For Water Repairs At 317 Broad Street In Nevada City
Recommendation: Pass Resolution 2018-XX Awarding a contract to Springsteen Construction in the amount of $10,104.00 plus $2,000.00 contingencies for Water Repairs at 317 Broad Street in Nevada City and authorize the Mayor to sign.

J. **Subject:** Award Of Contract Change Order For Professional Environmental Consulting Services For Nevada Street Bridge Over Deer Creek In Nevada City
Recommendation: Pass Resolution 2018-XX awarding a contract change order to LSA Associates, Inc. in the amount of $9,000 for Professional Environmental Consulting Services for Nevada Street Bridge in Nevada City and authorize the Mayor to sign

4. APPROVAL OF ACTION MINUTES:

A. City Council Meeting – March 28, 2018

5. DEPARTMENT REQUESTED ACTION ITEMS AND UPDATE REPORTS:

A. **Subject:** Monthly Update On City Council Six-Month Strategic Objectives
Recommendation: Receive and file.

6. PUBLIC HEARINGS:

7. OLD BUSINESS:

A. **Subject:** Progress Report For Design Of Nevada Street Bridge Replacement Project In Nevada City
Recommendation: No action requested.

B. **Subject:** Final Map Check For Recordation Of The Tentatively Approved Nevada City Tech Center Phase 3 Final Map For Subdivision Into Three (3) Commercial Lots
Recommendation: After reviewing and considering the approved Mitigation Measures and Conditions of Approval, adopt Resolution 2018-XX to approve for filing the Final Map for Nevada City Tech. Center LLC – Phase 3 and authorize the Mayor to sign the map.

C. **Subject:** LAFCo Meeting Update
Recommendation: Receive and file.

D. **Subject:** Medical Cannabis Business Permit Format And Indemnification Agreement
Recommendation:
- Review the draft Indemnification Agreement prepared by the City Attorney and provide direction.
- Make a motion to pass Resolution 2018-XX, authorizing a permit format to be used for permitting any qualifying medical cannabis business.
- Provide direction to staff to move forward in creating a permit fee/deposit.

E. **Subject:** An Ordinance Of The City Of Nevada City Amending Chapter 9.22 Of The Nevada City Municipal Code Relating To Restrictions On Medical Commercial Cannabis Businesses And Limiting Activity That May Occur Under The City's Medical Cannabis Cultivation Permit

Recommendation: Hold a first reading for an Ordinance amending Chapter 9.22.110 with Subsection H, allowing activities related to nursery growing of immature plants and allowing processing of cannabis flower within city limits and adding Chapter 9.22.115 to prohibit commercial medical cannabis cultivation activities related to growing mature plants.

8. NEW BUSINESS:

A. Subject: Review Of Community And Economic Support Program Applications
Recommendation: Review proposals and provide direction related to the funding requests and the amount of funding to incorporate into the Fiscal Year 2018/19 budget.

9. CORRESPONDENCE: Regarding Medical Cannabis Business Applications

10. ANNOUNCEMENTS:

11. CITY MANAGER'S REPORT:

12. ADJOURNMENT

Certification of Posting of Agenda
I, Loree' McCay, Deputy City Clerk for the City of Nevada City, declare that the foregoing agenda for the April 11th, 2018 Regular Meeting of the Nevada City City Council was posted April 6th, 2018 at the entrance of City Hall. The agenda is also posted on the City's website www.nevadacityca.gov.

Signed April 6th, 2018 at Nevada City, California

_____
Loree' McCay, Deputy City Clerk

CITY OF NEVADA CITY
City Council
Long Range Calendar

April 25, 2018	Regular Council Meeting
May 9, 2018	Regular Council Meeting
May 23, 2018	Regular Council Meeting
June 13, 2018	Regular Council Meeting
June 27, 2018	Regular Council Meeting

NOTE: This list is for planning purposes; items may shift depending on timing and capacity of a meeting.

NOTICE: *As presiding officer, the Mayor has the authority to preserve order at all City Council meetings, to remove or cause the removal of any person from any such meeting for disorderly conduct, or for making personal, impertinent, or slanderous remarks, using profanity, or becoming boisterous, threatening or personally abusive while addressing said Council and to enforce the rules of the Council.*

REPORT TO CITY COUNCIL

City of Nevada City
317 Broad Street
Nevada City CA 95959
www.nevadacityca.gov

APRIL 11, 2018

TITLE: Accounts Payable Activity Report – March 2018

RECOMMENDATION: Receive and file.

CONTACT: Loree' McCay, Administrative Services Manager

BACKGROUND / DISCUSSION: The attached Accounts Payable Activity Report includes all the cash disbursements associated with the City-wide Expenditures for the month of March 2018.

ENVIRONMENTAL CONSIDERATIONS: Not applicable.

FISCAL IMPACT: Varies Monthly.

ATTACHMENTS:

- ✓ Accounts Payable Activity Report – March 2018

Period	Vendor # (Name)	Invoice Number	Invoice Date	Due Date	Disc. Terms	Gross Amount	Description
03-18	ACE03 (ACE WELDING, INC.)	8702	01/30/18	/ /		1407.92	TRASH CANS
03-18	ADV11 (ADVANTAGE GEAR, INC.)	123857	02/22/18	/ /		261.05	UNIFORM ALLOWANCE S.GOODSPEED
03-18	ALH02 (ALHAMBRA & SIERRA SPRINGS)	030818	03/08/18	/ /		29.44	DPW WATER FEB 2018
03-18	ALL18 (ALL ELECTRIC MOTORS, INC.)	20895	02/26/18	/ /		2358.15	MIXER REPAIR
03-18	ALL25 (ALL STAR AUTOMOTIVE)	16834	02/19/18	/ /		361.68	#29 REPAIR
03-18	AMA00 (SYNCB/AMAZON)	458976368	02/02/18	/ /		67.59	SAFETY
		537465953	01/28/18	/ /		152.36	SAFETY
		679764343	02/08/18	/ /		115.98	PARKING METERS
		788576466C	02/02/18	/ /		61.71-	SAFETY VEST REFUND
			Vendor's Total ----->			274.22	
03-18	AME19 (AMERICAN FIDELITY)	B729983	03/01/18	/ /		1003.24	STD/LTD BENEIFTS MARCH 2018
03-18	AME24 (AMERICAN UNITED LIFE INSURA	MAR 2018	03/21/18	/ /		441.12	LIFE INS 3/1-3/31/18
03-18	AQU01 (AQUA SIERRA CONTROLS INC)	28579	02/08/18	03/10/18	A	1514.25	WASTING VALVES WIRING
		28612REV	02/22/18	03/24/18	A	1600.98	PLC PROGRAM COPYING
			Vendor's Total ----->			3115.23	
03-18	ARA01 (ARAMARK)	635835651	02/01/18	/ /		71.69	CITY HALL/DPW MATS
03-18	AT&15 (AT&T CALNET 3)	10901487	02/10/18	/ /		991.94	BAN#9391023504 1/10-2/9/18
		11040909	03/10/18	/ /		990.34	2/1-3/9/18 BAN#9391023504
			Vendor's Total ----->			1982.28	
03-18	AT&16 (AT&T)	MAR 2018	02/28/18	/ /		94.99	WWTP INTERNET SVC 3/1-3/31/18
03-18	ATO01 (A TO Z SUPPLY)	336071	02/12/18	03/14/18	A	905.69	LIME
		336521	02/22/18	03/24/18	A	90.49	PLUMBING PARTS
		336560	02/23/18	03/25/18	A	119.71	PLUMBING PARTS
			Vendor's Total ----->			1115.89	
03-18	B&C01 (B & C TRUE VALUE HOME CTR)	310002	02/12/18	03/14/18	A	102.91	OP MAT
		310208C	02/13/18	03/15/18	A	23.31-	OP MAT REFUND
		311990	02/28/18	03/30/18	A	36.99	PLUMBING PARTS
		312358	03/03/18	04/02/18	A	44.83	OP MAT
			Vendor's Total ----->			161.42	
03-18	BAN01 (JOHN PEKAREK, BANNER COMMUN	34281	03/01/18	03/31/18	A	50.00	WWTP RADIO REPEATERS FEB 2018
03-18	BEA01 (BEACH RETREAT & LODGE AT TA	031918	03/19/18	/ /		331.65	TOP DOG POLICE K-9 SUPERVISOR COURSE
03-18	BEA02 (BEAM SECURITY SYSTEMS)	180819	03/01/18	/ /		126.00	BLDG MAINT
03-18	BIG02 (BIG 1)	95494	03/07/18	/ /		1457.25	WASHER/DRYER
03-18	BLU05 (BLUE SHIELD OF CALIFORNIA)	APR 2018	03/14/18	/ /		43581.63	HEALTH INS APRIL 2018 INV#180730012800
03-18	BOS03 (NANCY BOSTIC)	030818	03/08/18	/ /		33.00	OVERPAYMENT REFUND NC010005413
03-18	BUS02 (BUSINESS CARD/B OF A VISA)	0207-0306	03/06/18	/ /		909.91	MISC DEPT PURCHASES 2/7-3/6/18
03-18	CAL55 (CALIFORNIA SOCIETY OF MUNIC	2018	01/01/18	/ /		110.00	2018 CSMFO MEMBERSHIP C.OLSON

Period	Vendor # (Name)	Invoice Number	Invoice Date	Due Date	Disc. Terms	Gross Amount	Description
03-18	CAN03 (SYLVIA J. CANO)	022518	02/25/18	/ /		1100.00	JANITOR CITY/VETS HALL FEB 2018
03-18	CAN05 (CANON FINANCIAL SERVICES, I	18410491	03/13/18	/ /		668.09	CONTRACT 3/1-3/31/18 USAGE 2/1-2/28/18
03-18	CAN06 (STELLA CANFIELD)	032018	03/20/18	/ /		100.00	VETS BLDG 3/4/18-3/9/18
03-18	CAR01 (GREGORY CARMICHAEL)	030518	03/05/18	/ /		100.00	SEAMANS LDGE 03/04/18
03-18	CAS08 (CASH)	JAN-FEB18	03/16/18	/ /		51.20	PETTY CASH REIMB JAN-MAR 2018
03-18	CHA18 (MICHAEL CHAU)	021918	02/19/18	/ /		200.00	TRAINING REIMB
03-18	CHE08 (CHEMTRADE CHEMICALS US LLC)	92303819	02/13/18	/ /		2403.07	ALUMINUM
03-18	CLI03 (SID CLIFFORD)	022618	02/26/18	/ /		100.00	SEAMANS LDGE 2/17/18
03-18	COL16 (JEFFREY COLLIGNON)	0224-0309	03/12/18	/ /		120.00	FIRE INTERN SVCS 2/24-3/9/18
		0310-0323	03/26/18	/ /		120.00	INTERN SVCS 03/10-03/23/18
			Vendor's Total ----->			240.00	
03-18	COM08 (COMCAST CABLE)	320-419	03/15/18	/ /		30.45	MONTHLY TV CHG/MTG REC 3/20-4/19/18
		0302-0401	02/27/18	/ /		75.26	DPW MNTHLY INTERNET SVC 3/2-4/1/18
			Vendor's Total ----->			105.71	
03-18	COM09 (COMMERCIAL PUMP SERVICE, IN	9599	02/08/18	/ /		1140.00	PUMP REPAIR
03-18	CON02 (CONSOLIDATED ELECTRICAL)	583446	02/21/18	03/23/18	A	139.34	LIGHTS
03-18	CON11 (CME SERVICES)	64659	02/19/18	/ /		40798.00	SEWER/STORM DRAIN REPLACEMENT @ W BROAD ST
03-18	COR01 (CORBIN WILLITS SYSTEMS)	B802151	02/15/18	03/17/18	A	423.54	MONTHLY OPS SYS MARCH 2018
		B803151	03/15/18	04/14/18	A	423.54	MONTHLY OPS SYS APRIL 2018
			Vendor's Total ----->			847.08	
03-18	COU05 (COUNTY OF NEVADA)	#217/18	02/23/18	03/25/18	A	1060.41	132 MAIN ST SOLIDA WASTE REMOVAL FY 17/18
		#2 17/18	02/23/18	03/25/18	A	1060.41	427 NIMROD SOLID WASTE REMOAL FY 17/18
		#2*17/18	02/23/18	03/25/18	A	42.41	412 COMMERCIAL ST SOLID WASTE REMOVAL FY 17/
		#2-17/18	02/23/18	03/25/18	A	88.37	775 ZION ST SOLID WASTE REMOVAL FY 17/18
		#2.17/18	02/23/18	03/25/18	A	14.14	211 PINE ST SOLID WASTE REMOVAL FY 17/18
			Vendor's Total ----->			2265.74	
03-18	COU12 (COUNTRY COPY PRINT SHOP)	3285382-0	03/05/18	04/04/18	A	22.84	WATER EX PUNCH CARDS
03-18	COU23 (NEVADA COUNTY COLLECTIONS)	FEB 2018	03/21/18	04/20/18	A	2952.00	PARKING TIX/POC FOR FEB 2018
03-18	CRA01 (CRANMER ENGINEERING, INC.)	170961	01/31/18	03/02/18	A	726.50	LAB TESTING
		171424	02/28/18	03/30/18	A	1466.00	LAB TESTING
		171502	02/28/18	03/30/18	A	315.00	LAB TESTING
			Vendor's Total ----->			2507.50	
03-18	CRA12 (CRAIG JOHNSON PLUMBING&DRAI	15260	02/28/18	/ /		2690.35	FIREHOUSE #2 NEW GAS LINES
03-18	CUN00 (GREGORY CUNDIFF)	011292017u	03/14/18	/ /		600.00-	Ck# 033003 Reversed
		11292017.	11/29/17	/ /		600.00	NEW HIRE POLYGRAPH C.LEWIS W.GOIN
			Vendor's Total ----->			.00	
03-18	CWS00 (CWS ELECTRICAL)	18-015	03/04/18	/ /		65.00	ELECTRIC REPAIR
03-18	DAT01 (DATA TICKET, INC.)	86179	02/28/18	03/30/18	A	985.14	TICKET PROCESSING JAN 2018

Period	Vendor # (Name)	Invoice Number	Invoice Date	Due Date	Disc. Terms	Gross Amount	Description
03-18	DEL08 (DELTA INDUSTRIAL SOLUTIONS)	22197	02/09/18	/ /		671.00	TRASH BAGS
		22349	03/01/18	/ /		811.36	SUPPLIES
			Vendor's Total ----->			1482.36	
03-18	DEP06 (DEPT OF FORESTRY & FIRE)	148669	02/08/18	/ /		28.13	BROADCAST DISPATCH 1ST QTR FY 17/18 ADDL PMN
03-18	DEP08 (DEPT OF INDUSTRIAL RELATION	1231274	02/26/18	/ /		3050.00	WWTP SETTLEMENT INSPECTION#1231274
03-18	DEP13 (DEPARTMENT OF JUSTICE)	283762	02/05/18	/ /		137.00	BLOOD & ALCOHOL ANALYSIS
		287189	02/22/18	/ /		70.00	BLOOD & SLCOHOL ANALYSIS
		292335	03/05/18	/ /		70.00	BLOOD & ALCOHOL ANALYSIS FEB 2018
			Vendor's Total ----->			277.00	
03-18	DEP17 (DEPT OF TOXIC SUBSTANCES CO	17SM1994	02/02/18	/ /		842.32	INDIAN FLAT LOT PROJ CODE 101377
03-18	DOK01 (DOKKEN ENGINEERING)	32633	02/21/18	/ /		4588.05	NEVADA STREET BRIDGE DESIGN JAN 2018
		32764	03/08/18	/ /		3576.48	NEVADA STREET BRIDGE DESIGN FEB 2018
			Vendor's Total ----->			8164.53	
03-18	DUN01 (DUNCAN PARKING TECHNOLOGIES	111517u	03/14/18	/ /		4126.50-	Ck# 032780 Reversed
		DPT030904	01/31/18	03/02/18	A	4735.78	PARKING METERS
			Vendor's Total ----->			609.28	
03-18	ECO01 (ECONOMY PEST CONTROL INC)	57570	02/21/18	03/23/18	A	140.00	BLDG MAINT
03-18	ELL01 (CONNOR ELLISON)	0224-0309	03/12/18	/ /		170.00	FIRE INTERN SVCS 2/24-3/9/18
		0310-0323	03/26/18	/ /		120.00	FIRE INTERN SVCS 03/10-03/23/18
			Vendor's Total ----->			290.00	
03-18	ENG06 (ENGINEERED FIRE SYSTEMS, IN	13493	03/02/18	/ /		150.00	FIRE PLAN REVIEW @ 228 COMMERCIAL ST
		13532	03/10/18	/ /		200.00	FIRE PLAN REVIEW @ 569 SEARLS
			Vendor's Total ----->			350.00	
03-18	ETH00 (ETHAN WADE GRAPHICS)	44723	10/02/17	/ /		516.08	HATS
03-18	EVE01 (EVERGUARD SYSTEMS)	A57961	01/22/18	/ /		90.00	CHAMBER FIRE ALARM SVC 2/1-4/30/18
		A58246	02/19/18	/ /		90.00	MUSEUM FIRE ALARM SVC 3/1-5/31/18
			Vendor's Total ----->			180.00	
03-18	EXT00 (EXTREME ROOFING)	030218	03/02/18	/ /		1000.00	ROOF REPAIR @ FH#1 RAT REPAIR
03-18	GAL01 (GALLS, LLC)	7862813C	07/07/17	08/06/17	A	138.05-	UNIFORM ALLOWANCE CREDIT K.HESS
		8031598	08/04/17	09/03/17	A	130.94	UNIFORM ALLOWANCE K.HESS
		9445759	03/03/18	04/02/18	A	472.89	LT UNIFORM ALLOWANCE C.ELLIS
		9445760	03/03/18	04/02/18	A	283.15	LT UNIFORM ALLOWANCE C.ELLIS
		9445763	03/03/18	04/02/18	A	173.37	LT UNIFORM ALLOWANCE C.ELLIS/CSO CLENDENEN
		9463853	03/06/18	04/05/18	A	114.63	UNIFORM ALLOWANCE C.ELLIS
			Vendor's Total ----->			1036.93	
03-18	GOL19 (GOLDEN STATE FLOW)	021C	03/13/17	/ /		8.60-	CHANGE IN SALES TAX RATE INV#I-053443
		I-056443	03/12/18	/ /		152.72	HANDHELD BATTERY
			Vendor's Total ----->			144.12	
03-18	GOL20 (GOLD COUNTRY WATER)	0178799	02/02/18	/ /		11.50	WATER COOLER RENTAL
03-18	GOO02 (SAM GOODSPEED)	022218	02/22/18	03/24/18	A	68.00	EMT RE-CERT
03-18	GRA01 (GRAY ELECTRIC COMPANY)	048616	02/27/18	03/29/18	A	26.00	CITY HALL ALARM SVC MAR 2018
		048617	02/27/18	03/29/18	A	28.00	SEAMANS LDGE ALARM SVC MAR 2018
			Vendor's Total ----->			54.00	

Period	Vendor # (Name)	Invoice Number	Invoice Date	Due Date	Disc. Terms	Gross Amount	Description
03-18	GRA10 (GRAINGER)	970665507	02/21/18	03/23/18	A	158.50	AIR SYSTEM PARTS
03-18	GRA14 (CITY OF GRASS VALLEY FIRE	DFD2118018	03/07/18	04/06/18	A	1268.74	SALARY NON PERM 02/11/18 ARMSTRONG
03-18	GRA24 (GRASS VALLEY AIR)	57761	03/06/18	/ /		118.00	425 NIMROD HEATER
03-18	GRE16 (GUY GREEVER SR.)	021218	02/12/18	/ /		100.00	SEAMANS LFGE 02/10/18 KYLE W GREEVER
03-18	HAE01 (HAEMMIG CONSTRUCTION INC.)	2000	02/16/18	/ /		3890.39	FINAL ROOF REPAIR @ 775 ZION
		2001	02/16/18	/ /		3214.20	CITY YARDS CLEAN-UP
			Vendor's Total ----->			7104.59	
03-18	HBE01 (HBE RENTALS)	391618	02/15/18	03/17/18	A	174.00	LIGHT REPAIR
03-18	HDL00 (HINDERLITER, deLLAMAS & ASS	0028569IN	02/27/18	/ /		1532.11	AUDIR SVCS 3RD QTR 2017 1ST QTR SALES TAX
03-18	HEN03 (TADHG ANDREW HENNESSY)	030818	03/08/18	/ /		38.00	OVERPAYMENT REIMB NC020007469
03-18	HIG07 (WILLIAM HIGHSMITH)	032118	03/21/18	/ /		641.36	TOOL CHEST REIMB
03-18	HIL02 (HILLS FLAT LUMBER CO.)	482173/1	01/26/18	02/25/18	A	4.33	POOL KEYS
		483696/1	02/02/18	03/04/18	A	166.22	SMALL TOOLS & FASTENERS
		486613/1	02/17/18	03/19/18	A	50.08	TOWELS, FAN & MOP
		487252/1	02/20/18	03/22/18	A	544.29	EXTENSION CORDS & HEATER
		487253/1	02/20/18	03/22/18	A	126.13	HEATER PROPANE
		487972/1	02/23/18	03/25/18	A	65.71	GLOVES
		491035/1	03/13/18	04/12/18	A	60.35	GARDEN HOSE
		781990/1	03/23/18	04/22/18	A	675.24	UNIFORMS
		783414/1	02/01/18	03/03/18	A	224.35	UNIFORMS ALL DEPTS
		803800/1	02/02/18	03/04/18	A	480.97	TOOL CHEST/CABINET
			Vendor's Total ----->			2397.67	
03-18	HIL10 (HILL BROTHERS CHEMICAL CO.)	7032639	02/01/18	/ /		1691.86	MAG
		7032640	02/07/18	/ /		1508.09	THIO GUARD
		7033061	02/07/18	/ /		730.14	LIME PUMP
		7033063	02/14/18	/ /		1616.19	MAG SOLUTION
		7033213	02/20/18	/ /		1508.09	MAG SOLUTION
		07033692	02/26/18	/ /		1508.09	MAG SOLUTION
		07033912	03/05/18	/ /		1562.14	MAG
			Vendor's Total ----->			10124.60	
03-18	HIR00 (HIRERIGHT, LLC)	H0125526	02/28/18	/ /		35.01	BACKGROUND CHECK DPW 2/22/18 J. BLANSCET
03-18	INT07 (INTERSTATE SALES)	17559	03/02/18	04/01/18	A	1713.86	STREET SAFETY
		17562	03/02/18	04/01/18	A	1049.61	STREET SIGNS
		17563	03/02/18	04/01/18	A	113.73	STENCILS
			Vendor's Total ----->			2877.20	
03-18	INT18 (INTERNATIONAL ASSOCIATION)	100128484	03/07/18	/ /		150.00	IACP MEMBER RENEW 1/1-12/31/18 INV#100128484
03-18	IRO01 (IRON MOUNTAIN)	PWE3515	02/28/18	/ /		114.45	RECORDS RETENTION CUST#RSJ9T 1/24-2/20/18
03-18	JAC03 (JACKSON LEWIS P.C.)	7084011	02/28/18	/ /		1008.00	LEGAL SVCS DEC 2017-FEB 2018
03-18	JHP00 (JH PETROLEUM)	784670	01/31/18	/ /		37.96	PD FUEL K9 UNTI #20 JAN 2018
		785615	02/28/18	/ /		40.85	K9 FUEL FEB 2018
			Vendor's Total ----->			78.81	
03-18	JON00 (JONES & MAYER)	022818	02/28/18	/ /		6121.00	LEGAL SVCS FED 2018
03-18	JUD01 (JUDD BUICK CONSTRUCTION)	0001	02/20/18	/ /		38293.00	2/12-2/19/18 CLEARING @ THE BURN DUMP/BUS LI

Period	Vendor # (Name)	Invoice Number	Invoice Date	Due Date	Disc. Terms	Gross Amount	Description
03-18	KEL01 (CHARI KELSEY)	030518	03/05/18	/ /		425.00	SEAMANS LDGE 03/03/18
03-18	LAR05 (DAVID LARKIN)	030818	03/08/18	/ /		33.00	VIOLATION DISMISSED REFUND NC010003278
03-18	LCA01 (LC ACTION POLICE SUPPLY)	031918	03/19/18	04/18/18	A	489.31	SAFETY PROGRAM S.SCRIMAGER GLOCK 17 GEN 5
03-18	LEE09 (ANDREA LEE)	030818	03/08/18	/ /		50.00	OVERPAYMENT REIMB NC010005279
03-18	LEX01 (RELX INC. DBA LEXIS NEXIS)	309121052	11/30/17	/ /		90.00	ONLINE ATTORNEY SVC NOV 2017
		309125573	12/31/17	/ /		90.00	ONLINE ATTORNEY SVC DEC 2017
		309130163	01/31/18	/ /		90.00	ONLINE ATTORNEY SVC JAN 2018
			Vendor's Total ----->			270.00	
03-18	LIF01 (LIFE ASSIST)	840600	02/09/18	03/11/18	A	53.26	OP MAT
		844398	03/05/18	04/04/18	A	106.34	FD EXAM GLOVES
			Vendor's Total ----->			159.60	
03-18	LOW01 (ANNA LOW)	030818	03/08/18	/ /		86.00	OVERPAYMENT REIMB NC020002416
03-18	MCA00 (BRYAN MCALISTER)	031318	03/13/18	/ /		300.04	NOTARY/OVERNIGHT REIMB
03-18	MOT04 (MOTOR ELECTRIC SERVICE)	114950	03/12/18	04/11/18	A	26.08	VEH REPAIR
03-18	MOZ01 (DENISE MOZZETTI)	031218	03/12/18	/ /		200.00	SEAMANS LDGE 03/12/18 +OVERPAYMENT
03-18	MUN05 (MUNICIPAL EMERGENCY SERVICE	IN1191139	01/04/18	/ /		58.66	OP MAT
		IN1201838	02/12/18	/ /		138.94	FIT TESTING
			Vendor's Total ----->			197.60	
03-18	MUS05 (MUSTANG FIREARMS & SPORTING	031918	03/19/18	/ /		489.31	SAFETY PROGRAM GLOCK 17 GEN5 S.SCRIMAGER
		031918u	03/27/18	/ /		489.31-	Ck# 033224 Reversed
		032618	03/26/18	/ /		700.00	SAFETY PROGRAM STAG COMPLETE KIT S.SCRIMAGER
		032618u	03/27/18	/ /		700.00-	Ck# 033224 Reversed
		032718	03/27/18	/ /		700.00	SAFETY PROG S.SCRIMAGER STAG COMPLETE KIT
			Vendor's Total ----->			700.00	
03-18	NCT00 (NEVADA CO. DIGITAL MEDIA CE	287)	03/01/18	/ /		840.00	VIDEO SVCS-CC FEB 2018
03-18	NEV02 (NEVADA IRRIGATION DISTRCT)	0102*0227	02/27/18	03/29/18	A	61.95	WATER SVC 5 KIDDER 1/2-2/27/18 ACCT#38493-00
		0102-0227	02/27/18	03/29/18	A	39.80	WATER SVC 5 KIDDER 1/2-2/27/18 ACCT#38626-00
		0102.0227	02/27/18	03/29/18	A	97.60	WATER SVC 201 PROV 1/2-2/27/18 ACCT#37256-00
		0102/0227	02/27/18	03/29/18	A	37.40	WATER SVC 201 PROV 1/2-2/27 ACCT#37398-00
			Vendor's Total ----->			236.75	
03-18	NEV06 (NEVADA CITY ENGINEERING)	27711	03/05/18	04/04/18	A	955.50	NEVADA STREET BRIDGE REPLACEMENT FEB 2018
03-18	NEV17 (NEVADA COUNTY FIRE AGENCY)	2017-02	02/22/18	03/24/18	A	782.25	FD DUES
03-18	NEV40 (NEVADA COUNTY CONSOLIDATED	201718114 I	03/02/18	04/01/18	A	484.16	SALARY NON PERM COVERAGE FOR D.PAULUS 1/23/1
		201718116	03/02/18	04/01/18	A	13.50	TELEPHONE
		201718119	03/02/18	04/01/18	A	303.35	VEH MAINT
		201718121	03/02/18	04/01/18	A	175.91	VEH MAINT
		201718122	03/02/18	04/01/18	A	279.73	VEH MAINT
		201718126	03/02/18	04/01/18	A	30.00	ID CARDS
		6-FY 1718	03/13/18	04/12/18	A	522.37	ANNUAL PMNT FOR ZONEA-NSIDE ANNEX/B-GRACIE C
			Vendor's Total ----->			1809.02	
03-18	NEV54 (COUNTY OF NEVADA)	131655	03/15/18	/ /		3717.50	IT SVCS 9/24-12/30/17
03-18	NOR30 (NORTH STATE CONSULTING)	18-02	02/28/18	/ /		5056.00	ENGINEER CONSULTING MEASURE S FEB 2018

Period	Vendor #	(Name)	Invoice Number	Invoice Date	Due Date	Disc. Terms	Gross Amount	Description
03-18	NOR33	(WILLIAM J. FALCONI, DBA NOR	18-02	02/28/18	/ /		1408.00	ENGINEER CONSULTING FEB 2018
03-18	OCT00	(OCT WATER QUALITY ACADEMY)	WQA4100	03/06/18	/ /		190.00	2 DAY REVIEW
03-18	P.S00	(P. SCOTT BROWNE, ATTORNEY)	PE 021518	02/15/18	/ /		2572.20	NC B&B LIT P/E 2/15/18
			PE 031518	03/15/18	/ /		1356.00	NC B&B LIT P/E 03/15/18
				Vendor's Total ----->			3928.20	
03-18	PAC02	(PACIFIC GAS & ELECTRIC)	0113-0213	02/23/18	03/25/18	A	16753.95	GAS/ELECT SVC 1/13-2/13/18
			0131-0228	03/05/18	04/04/18	A	1423.68	SVC#8071-9,5674-1&1982-6 1/31-2/28/18
				Vendor's Total ----->			18177.63	
03-18	PER01	(CALPERS - FISCAL SERVICES D	MAR 2018	03/01/18	03/31/18	A	17077.48	CALPERS UNFUNDED LIABILITY MARCH 2018
03-18	PIT03	(PITNEY BOWES SUPPLIES)	100674068	03/09/18	/ /		114.19	EQUIP RENTAL 12/30/17-03/29/18
03-18	PIT04	(PITNEY BOWES POSTAGE BY PHO	FEB 2018	03/05/18	/ /		230.99	GENERAL POSTAGE FEB 2018
03-18	PLA01	(PLAZA TIRE CO., INC.)	3224153	02/15/18	03/17/18	A	628.42	K9 VEH TIRES 2016 CHEVY TAHOE
03-18	PLA13	(PLATT)	P659831	02/19/18	/ /		66.25	LIGHTS
			P695600	02/13/18	/ /		160.40	LIGHTS CORP YARD
			P747489	02/19/18	/ /		1069.63	LIGHTS CORP YARD
			P753734	02/19/18	/ /		7.31	LIGHTS CORP YARD
				Vendor's Total ----->			1303.59	
03-18	POR03	(PORTER ENGINEERING)	030618	03/06/18	/ /		547.50	PROVIDENCE QUARTZ MILL GRANT PROJECT 2/21-3/
03-18	PRE05	(PREMIER ACCESS INSURANCE CO	APR 2018	03/11/18	/ /		2861.20	DENTAL BENEFITS APRIL 2018
03-18	PRI07	(BRAD GONZALES)	031218	03/12/18	/ /		1427.00	OFFICE CARPET/COUNCIL CHAIR CLEANING 3/10/18
03-18	RAY01	(RAY MORGAN CO)	1973012	03/05/18	/ /		36.48	CONTRACT USAGE 2/1-2/2/18
03-18	REA00	(REAL GRAPHIC)	49987	02/15/18	/ /		29.17	AS-BUILT PLANS
03-18	REE02	(REED'S LOCKSMITHING, INC.)	2331	02/10/18	03/12/18	A	212.44	LOCK REKEY
			2378	03/02/18	04/01/18	A	40.23	KEYS
				Vendor's Total ----->			252.67	
03-18	RIE02	(RIEBE'S NAPA AUTO PARTS)	781876	02/05/18	03/07/18	A	32.64	VACTRON
			781898	02/05/18	03/07/18	A	95.19	SWEEPER
			781938	02/05/18	03/07/18	A	13.70	JETTER
			783195	02/15/18	03/17/18	A	24.51	SWEEPER
			783199	02/15/18	03/17/18	A	18.72	SWEEPER
			783588	02/20/18	03/22/18	A	47.96	VEH MAINT
			783796	02/21/18	03/23/18	A	82.20	#36
			784312	02/27/18	03/29/18	A	36.15	SANDER
			784361	02/27/18	03/29/18	A	12.23	SANDER
			784442	02/28/18	03/30/18	A	54.78	MISC SMALL TOOLS
			784472	02/28/18	03/30/18	A	24.53	VEH REPAIR
				Vendor's Total ----->			442.61	
03-18	RIP01	(ANGELA RIPLEY)	022018	02/20/18	/ /		100.00	VETS BLDG 2/17/18
03-18	ROB03	(ROBINSON ENTERPRISES, INC.)	14768	02/15/18	03/17/18	A	3076.80	SOLID HAUL WWTP CUST#141130 INV#IN00014768 2
			14988	02/28/18	03/30/18	A	1188.60	SOLID HAUL CUST#141130 INV#IN00014988 02/28/
			18021374	02/15/18	03/17/18	A	657.19	DPW FUEL CUST#141100 INV#FI18021374 2/1-2/15
			18021375	02/15/18	03/17/18	A	1168.14	PD FUEL CUST#141120 INV#FI18021375 2/1-2/15/
			18021376	02/15/18	03/17/18	A	129.72	WWTP FUEL CUST#141130 INV#FI18021376 2/1-2/1
			18021379	02/15/18	03/17/18	A	420.55	FD FUEL CUST#141217 INV#FI18021379 2/1-2/15/
			18022365	02/28/18	03/30/18	A	769.73	DPW FUEL CUST#141100 INV#FI18022365 2/15-2/2
			18022366	02/28/18	03/30/18	A	1128.18	PD FUEL CUST#141120 INV#FI18022366 2/15-2/28
			18022367	02/28/18	03/30/18	A	101.74	WWTP FUEL CUST#141130 INV#FI18022367 2/15-2/

Period	Vendor #	(Name)	Invoice Number	Invoice Date	Due Date	Disc. Terms	Gross Amount	Description
03-18	ROB03	(ROBINSON ENTERPRISES, INC.)	18022370	02/28/18	03/30/18	A	513.16	FD FUEL CUST#141217 INV#FI18022370 2/15-2/28
				Vendor's Total ----->			9153.81	
03-18	ROB04	(ROBINSON ENTERPRISES INVEST	129488	02/27/18	03/29/18	A	39.49	FD VEH REPAIR CUST#141217 INV#IN00129488 02/
			129506	02/28/18	03/30/18	A	100.00	GEN.INSPECTION WWTP CUST#141130 INV#IN001295
				Vendor's Total ----->			139.49	
03-18	ROH00	(PAUL ROHDE)	031918	03/19/18	/ /		403.46	REIMB UNIFORM ALLOWANCE
03-18	ROS08	(ROSE WATER SYSTEM MANAGEMEN	779	03/06/18	/ /		852.50	CABY-WASHINGTON CONSULTING SVCS JAN/FEB 2018
03-18	SIE25	(THATCHER COMPANY, INC)	247896	02/16/18	03/18/18	A	2538.36	S02 TONNER & 4X1 ACID
			247900C	02/14/18	03/16/18	A	1000.00-	CYLINDER RETURN
				Vendor's Total ----->			1538.36	
03-18	SIE26	(SIERRA CHEMICAL COMPANY)	116014	03/09/18	04/08/18	A	179.79	POOL CHEMICALS
03-18	SIE67	(SIERRA STREAMS INST.)	030718	03/07/18	/ /		498.00	LDC RESTORATION SSI PROJECT FEB 2018
			030818	03/08/18	/ /		3381.00	BROWNSFIELD QUARTZ MILL SSI FEB 2018
			021218A	02/12/18	/ /		4168.34	BROWNSFIELD QUARTZ MILL SSI JAN 2018
			021218B	02/12/18	/ /		748.00	LDC RESTORATION SSI PROJECT JAN 2018
				Vendor's Total ----->			8795.34	
03-18	SIM08	(JULIE SIMS)	030618	03/06/18	/ /		23.00	DISMISSED REFUND PARTIAL NC010007363
03-18	SIM09	(SIMPLY COUNTRY)	5957	01/09/18	/ /		126.75	HAY BALE CONTAINMENT
03-18	SMA02	(SMARTERBROADBAND, INC.)	13102	03/14/18	/ /		140.00	BROADBAND MNTHLY SVC APR 2018
03-18	SMI13	(SMITH & NEWELL CPA'S)	022218	02/22/18	/ /		7405.00	25% AUDIT SERVICES FY 16/17
03-18	SOL05	(SOLENIS LLC)	131271982	02/19/18	/ /		3254.86	POLYMER
03-18	SPD01	(SPD MARKETS)	04335459	02/20/18	03/22/18	A	71.29	INMATE SUPPLIES
			05477252	02/12/18	03/14/18	A	163.28	OP MAT
			05479195	02/16/18	03/18/18	A	25.98	INMATE SUPPLIES
			07427116	02/06/18	03/08/18	A	85.89	STRATEGIC PLANNING SUPPLIES 2/8/18
			08313200	02/22/18	03/24/18	A	1.95	OP MAT
				Vendor's Total ----->			348.39	
03-18	SPD02	(SPD SAW SHOP)	110129	01/24/18	02/23/18	A	134.26	CHAIN FOR SAWS
03-18	SPI03	(SPIRAL)	51311	03/01/18	/ /		61.95	INTERNET SVC 4/1-5/1/18
03-18	STE12	(STERICYCLE, INC.)	300417459	03/01/18	/ /		20.78	SHARPS MNTHLY COLLECTION/MED WASTE FEB 2018
03-18	SUN01	(SUNRISE ENVIRONMENTAL)	83757	02/12/18	03/14/18	A	793.62	SUPPLIES
			84011	02/21/18	03/23/18	A	359.61	SUPPLY
				Vendor's Total ----->			1153.23	
03-18	SWR01	(SWRCB)	LW1015227	12/26/17	01/25/18	A	6882.00	STATE COMPLIANCE FEES 7/1/17-6/30/18
03-18	THE10	(THE AUTO SHOP)	22056	02/08/18	/ /		716.59	K9 UNIT BRAKES
			22302	03/08/18	/ /		581.83	#24 REPAIR
				Vendor's Total ----->			1298.42	
03-18	THO17	(THOMSON REUTERS)	837705631	02/04/18	/ /		125.61	PENAL CODE BOOKS 01/05/18-02/04/18
03-18	TOO01	(THE TOOL SHED)	83076	02/23/18	03/25/18	A	194.38	BATTERIES FOR DRILL

Period	Vendor # (Name)	Invoice Number	Invoice Date	Due Date	Disc. Terms	Gross Amount	Description
03-18	TOP01 (TOP DOG POLICE K9)	031918	03/19/18	/ /		379.00	K-9 SUPERVISOR TRAINING 4/24/18-4/26/18
03-18	TRI06 (TRI COUNTIES BANK)	MAR 2018	02/27/18	/ /		2274.05	LOAN#6020023160 425 NIMROD
03-18	UNI01 (THE UNION)	5172689	02/28/18	03/30/18	A	247.95	EMPLOYMENT MAINT WORKER AD#12953769
		5172690	02/28/18	03/30/18	A	50.00	FACILITY RENTAL AD#12951137
		5176005	03/08/18	04/07/18	A	150.43	PH NOTICE PROHIBIT CANNABIS CULT AD#12958331
		5176006	03/08/18	04/07/18	A	190.39	PH NOTICE PROPOSED RESID @165 GROVE AD#12958
		5176007	03/08/18	04/07/18	A	279.06	PH NOTICE VACATION OF NAT'L ALLEY AD#1295842
			Vendor's Total ----->			917.83	
03-18	UNI15 (UNITED ROTARY BRUSH CORP)	CI214719	02/22/18	/ /		792.29	SWEEPER
03-18	UNI18 (UNIVERSITY ENTERPRISES, INC	NEV-18-23	03/02/18	/ /		150.00	CULTURAL RESOURCES SEARCH FOR OLD AIRPORT
03-18	UPS00 (UPS)	A66920068	02/10/18	/ /		4.96	RETURN TRACKING # 1ZA669203594784101
03-18	USA01 (USA BLUE BOOK)	486727	02/07/18	03/09/18	A	779.15	PUMP PARTS
		492962	02/14/18	03/16/18	A	154.12	LAB SUPPLIES
		508322	03/05/18	04/04/18	A	922.07	REBUILD KITS FOR ANALYZERS
		509878	03/06/18	04/05/18	A	166.27	PLUMBING PARTS
			Vendor's Total ----->			2021.61	
03-18	VAL08 (VALLEY TOXICOLOGY SERV)	2914	02/28/18	/ /		670.00	BLOOD & ALCOHOL ANALYSIS FEB 2018
03-18	VER01 (VERIZON WIRELESS)	980233668	02/23/18	/ /		499.92	PD CELL SVCS 1/24-2/23/18 INV#9802336687
		980303166	03/07/18	/ /		63.83	WWTP&WTP ON CALL CELL 2/8-3/7/18
			Vendor's Total ----->			563.75	
03-18	VIR03 (CLAUDIA YASMIN VIRAMONTES)	030818	03/08/18	/ /		33.00	DISMISSED ISSUE REFUND NC020001930
03-18	VSP00 (VISION SERVICE PLAN-(CA))	MAR 2018	02/20/18	/ /		341.34	VISION BENEFITS MAR 2018
03-18	WAL01 (WALKER'S OFFICE SUPPLY)	3778	02/20/18	03/22/18	A	84.96	STRATEGIC PLANNING SUPPLIES
03-18	WIL02 (WILLIAMS STATIONERY)	0133502	02/08/18	03/10/18	A	106.64	PD OFFICE SUPPLIES
		0133602	02/16/18	03/18/18	A	13.98	BINDER CALENDAR FOR DPW
		0133808	03/01/18	03/31/18	A	207.17	PD OFFICE SUPPLIES
		0133914	03/09/18	04/08/18	A	96.29	PD WIRELESS KEYBOARD & MOUSE FOR M.BARBAO
		0133917	03/09/18	04/08/18	A	96.97	MISC OFFICE SUPPLIES
		0133924	03/12/18	04/11/18	A	80.96	PD FOOTREST FOR M.BARBAO
		0133930	03/12/18	04/11/18	A	227.39	PD KEYBOARD TRAY FOR M.BARBAO
		0133996	03/15/18	04/14/18	A	74.82	NEW DATE/RECEIVED STAMP
			Vendor's Total ----->			904.22	
03-18	WIL09 (DAN WILES)	030518	03/05/18	/ /		55.00	BOUNCE HOUSE DEPOSIT FOR CAMP FAIR
		032218	03/22/18	/ /		130.00	BALANCE FOR BOUNCE HOUSE FOR CAMP FAIR
			Vendor's Total ----->			185.00	
03-18	WOL02 (GREGORY WOLTERS)	031318A	03/13/18	04/12/18	A	196.50	PIONEER PARK BATH/TENNIS FEB 2018
		031318B	03/13/18	04/12/18	A	225.50	PIONEER PARK BATH/BRIDGE FEB 2018
			Vendor's Total ----->			422.00	
03-18	XIO00 (XIO, INC.)	201207258	02/15/18	/ /		265.00	CLOUD&SCADA SVC 3/2/18 MONTHLY
		201207342	03/15/18	/ /		265.00	CLOUD&SCADA SVC 3/15/18 MONTHLY
			Vendor's Total ----->			530.00	
03-18	ZEE01 (ZEE MEDICAL SERVICE CO.)	724901963	03/14/18	04/13/18	A	253.76	FIRST AID
03-18	ZYD02 (DAWN ZYDONIS)	032118	03/21/18	/ /		2063.99	P&R MISC PURCHASES REIMB
			Total of Purchases ->			329250.03	

REPORT TO CITY COUNCIL

City of Nevada City
317 Broad Street
Nevada City CA 95959
www.nevadacityca.gov

APRIL 11, 2018

TITLE: **Nevada City Farmer's Market Street Closure Request**

RECOMMENDATION: Review and authorize Nevada City Farmers Market street closure request per application.

CONTACT: Catrina Olson, City Manager

BACKGROUND / DISCUSSION: On March 1, 2018, the City received an application for the Saturday Nevada City Farmers Market series of events beginning June 2 and running through November 17. The proposed event hours are 8:30am to 1:00pm and the proposed street closures below are consistent with prior years:

- Union Street between Broad Street and Main
- Robinson Plaza

A summary of the specific event characteristics and recommended staff conditions are included in the application packet.

ENVIRONMENTAL CONSIDERATIONS: Not applicable.

FISCAL IMPACT: Not applicable.

ATTACHMENT:

- ✓ Street Closure/Special Event Application

CITY OF NEVADA CITY
MAR 01 2018
AMT. 50.00
RECEIVED
MAR 01
CITY OF NEVADA CITY

EVENT NAME: Nevada City Farmers Market

CITY OF NEVADA CITY SPECIAL EVENT

APPLICATION / CONTRACT

OVERVIEW

Thank you for choosing the City of Nevada City as the location for your event. The City requires the submittal of a Special Event Application as a pre-condition of considering whether to enter into an agreement to grant temporary use of all or any portion of a public street, sidewalk or alley.

Application materials must be completed in full and submitted to the City at least 90 days prior to your event date, and no more than one year in advance of the event date. Applications are accepted on a first-come, first-served basis. A non-refundable application fee must be paid upon submission of your completed application. Fees are described in the "Fees" section below. Use "NA" for "not applicable" to questions or sections that do not apply to your event. Incomplete applications will not be accepted and will delay processing which could affect the availability of your preferred event date or location. Please note the information you provide becomes public information.

City staff review application materials and prepare a Draft Special Event Contract (which may include additional requirements to ensure a safe event) for consideration by the City Council at a formal noticed public meeting. Applicants are strongly encouraged to attend the designated City Council meeting in order to discuss their proposed event and answer related questions. Please ensure you have City Council approval before marketing or advertising your event.

APPLICANT AUTHORIZATION AND INDEMNITY

To the extent allowed by law, Applicant agrees to defend, indemnify, and hold harmless the City of Nevada City, its agents, officials, and employees from and against all claims, damages, losses, injuries, illness, accidents relating to, arising out of, or resulting from, the use of this Special Event Application and the information contained therein, and any resulting Contract.

Applicant acknowledges that the information provided in this Application is true and accurate to the best of Applicant's knowledge and belief.

I have read, understand and agree to comply with all the information provided in the Special Event Application (attached) and any resulting permits and Special Event Contract if approved by the City Council.

Signature of Applicant — February 20, 2018 *Date*

Stephanie Stevens, Nevada City Framers Market Assoc. Market Manager

Printed Name and Title of Applicant

(Person signing must be the same person who is listed as the Applicant on page 2.)

APPLICANT INFORMATION

Name of Requested Event Nevada City Farmers Market

Name of Applicant/Responsible Party Stephanie Stevens
(Must match name on Page 1)

Sponsoring Organization/Company Nevada City Farmers Market Association, NCFMA

Street Address P O Box 2476 Apt/Unit/Suite

City Nevada City State CA Zip Code 95959

Email manager@ncfarmersmarket.org

Daytime Phone 530-206-3000 Cell Phone 530-206-3000

Does the sponsoring organization/party have experience producing similar events?

Yes / No (Circle One)

Event Contact for Public Information

Name Stephanie Stevens Contact Phone 530-206-3000

Email manager@ncfarmersmarket.org

Website ncfarmersmarket.org

Day of Event Contact Information

On-site Contact Name Stephanie Stevens

On-site Contact Cell Number 530-206-3000

Day of Event ALTERNATE Contact Information

On-site Contact Name Katy Gott

On-site Contact Cell Number 530-990-9403

EVENT DETAILS

Event Description. Please attach a detailed description of your event to this application (e.g. Overall summary, Is it open to the public? How will it be publicized? Is it kid/family friendly? Can it go forward rain or shine? Etc.) ***Attached***

Type of Event (Check all that apply)

___ Parade/Procession
___ Street Festival/Block Party
___ Fundraiser
___ Concert
___ Run/Walk/Bicycle
_X_ Other: farmers market

Has this event been produced before? Yes No
Is this an annual event? Yes No
Will there be an admission or entry fee? Yes No
If yes, fee per adult: $_____ Fee per child: $_____

[For Parades Only]
Number of units and floats for parade: _____

Event Date(s) Saturdays, June 2 to November 17, 2018

Expected number of:
Attendees 800 Participants 60 Volunteers 10

Event Hours Start 8:30 am End 1:00 pm

Set-up Date each Sat Time 6:30 am

Break Down Date each Sat Time 2:00 pm

Names of street(s), sidewalk(s), alley(s) proposed to be closed (attach additional pages or complete attached map if necessary). Note that it may be necessary to consult with a Police Sergeant (265-2626) and/or the Director of Public Works (265-2496) to accurately identify requested street closures. ***Map Attached***, page 14

Union Street between Broad & Main

Robinson Plaza between _____ & _____

_____ between _____ & _____

_____ between _____ & _____

Please note whether your event includes any of the following*:

_X_ Amplified sound
_X_ Food Vendors
_X_ Food Cooking
_X_ Alcohol sales
___ Temporary Lighting
_X_ Concessions
___ Stages/Platforms
_X_ Tents/Temporary Structures
___ Animals will be present

*If any of the above are checked, please include additional details below.

Amplified sound: There is a 10x10 tent in Robinson Plaza in front of the Pelton wheel. The sound level is monitored by the Market Booth on Union Street across from the Plaza.

Food Vendors: They are permitted and inspected by the Nevada County Department of Envir. Health.

Food Cooking: As above.

Alcohol Sales: If there is a wine vendor in the CFM (CDFA allows at most one per week), they have their own ABC permit.

Concessions: See detailed description of the market.

Tents: Vendors use 10x10 "easy-ups."

FEES

The City requires the payment of a non-refundable application fee upon submission of your completed application. Late fees apply to applications filed less than 90 days in advance of an event. The City does not guarantee any application submitted less than 45 days in advance will be able to be submitted to the City Council for consideration prior to the planned event. Please select from the following table the fee(s) that apply to your application:

_____ $100 Timely application for single new event OR old event with new sponsor
__X__ $50 Timely application for repeat of event with same sponsor
_____ $25 For each additional application for new event by the same sponsor
_____ $10 For each additional application for repeat of event with same sponsor
_____ $75 Additional fee for applications filed less than 90 days in advance of an event

$ 50 Total Fees

EVENT REQUIREMENTS

Alcohol. If alcohol is sold at your event, an Alcohol Permit from California Alcohol Beverage Control (ABC) is required. Please contact ABC at (916) 419-1319.

Amplified Sound. If the event will have amplified sound, applicant is required to have an event staff member responsible for monitoring sound levels to assure compliance with City noise standards when sound/music/noise may be audible beyond the event venue.

Business License. All vendors participating in an event held in Nevada City must obtain a current business license. For information about business license requirements, call City Hall at (530) 265-2496.

Event Notification. An event can change the normal flow of residential and business activity potentially causing a negative impact on the community. As the event organizer, you are responsible for notifying those residents and businesses that are adjacent to the planned closure prior to submission of your Application. Applicants must meet the Event Notification requirements unless the event is sponsored by the Nevada City Chamber of Commerce or has been approved and held annually in the same manner for three or more years. The preferred method of notification is the Requested Special Event Notification Form (Addendum A). Unless otherwise exempt, your application materials must include a signed Notification Certification (Addendum B) confirming adjacent residents and businesses were notified of the planned event.

Form of Payment. The City accepts payment in the form of cash, personal/business check, money order or cashier's check. Please note there will be a $25 service charge for all returned checks.

Insurance. The applicant and/or the sponsoring organization is required to provide proof of insurance. A current or valid Certificate of General Liability Insurance in the amount of $1,000,000 and an endorsement (CG2026 or equivalent) naming the City of Nevada City as additional insured will be required at least 30 days prior to the event.

Parking. Applicants will be required to work with the Nevada City Police Department to facilitate ingress/egress requirements for event participants.

Restrooms. Public restrooms are limited to two, one at Robinson Plaza and one in the Commercial Street parking lot. If your event is planned for more than 50 people or in an area away from either public restroom, you may be required to provide restroom accommodations and hand washing facilities for event attendees in the quantity prescribed by the City.

Waste Management/Recycling. You are responsible for properly disposing of all waste and garbage throughout the term of your event, and immediately upon conclusion of the event the area must be returned to a clean condition. Therefore, the City may require the applicant to provide trash and recycling containers if the event involves food or drink vendors. Should cleanup be inadequate or damage to City property occurs, you will be billed at full recovery rates, plus overhead for cleanup and repair.

CHECKLIST

Thank you for completing the Special Event Application. Before you submit your application to the City of Nevada City, please make sure you have completed the following steps:

✓ Sign AND date your application.

✓ Attach a detailed event description to the application. ***Attached, pages 11-12***

✓ Secure required insurance for the event. ***Attached, page 13***

___ Include a Notification Certification confirming businesses and residents have been notified of the planned event. **N/A Event has been approved and held annually in the same manner since 2008.**

✓ Calculate and include the applicable fee.

Submit your completed application to:

City of Nevada City
Attn. Special Event Applications
317 Broad Street
Nevada City, CA 95959

[Internal Use Only]

Police Comments:

Street Closure to be Posted 72 Hrs Prior to the Event.

DR

Fire Comments:

Must maintain 14 ft. FIRE LANES.

No parking in RED ZONES.

No blocking FIRE HYDRANTS.

Public Works Comments:

Must Put out 72 hr Sign.

Addendum A – Requested Street Closure/Special Event Notification Form

PLEASE NOTE. You have received this notification because your property/business is located adjacent to a requested temporary street, sidewalk or alley closure that is subject to City Council approval at a future City Council meeting. Please monitor future City Council agendas for consideration of the following request.

STREET CLOSURE/SPECIAL EVENT INFORMATION

Type of Event (Check all that apply)

___ Parade/Procession
___ Street Festival/Block Party
___ Fundraiser
___ Concert
___ Other: _____

Event Name/Description _____

_____

_____

_____

Event Date(s) _____ **Expected Attendance** _____

Event Hours Start _____ End _____

Set-up Date _____ Time _____

Break Down Date _____ Time _____

Names of street(s), sidewalk(s), alley(s) proposed to be closed:

_____ between _____ & _____

_____ between _____ & _____

_____ between _____ & _____

_____ between _____ & _____

_____ between _____ & _____

Sponsoring Organization _____

Event Contact _____ **Phone Number** _____

Event Website _____

Addendum B – Notification Certification

EVENT INFORMATION

Sponsoring Organization _____

Event Name _____

Event Date(s) _____

Event Location _____

Signature of Sponsor or Authorized Representative

I acknowledge I am responsible for providing notice of my requested event to all adjacent residents and businesses and certify that the entities listed below have been notified of the requested event. ***N/A Event has been approved and held annually in the same manner since 2008.***

Name (printed) Jane Sangwine-Yager

Signature _____

Name/Business	Address	Method of Notification
		☐ Email ☐ Hand Delivered ☐ Mail
		☐ Email ☐ Hand Delivered ☐ Mail
		☐ Email ☐ Hand Delivered ☐ Mail
		☐ Email ☐ Hand Delivered ☐ Mail
		☐ Email ☐ Hand Delivered ☐ Mail
		☐ Email ☐ Hand Delivered ☐ Mail
		☐ Email ☐ Hand Delivered ☐ Mail

[Attach additional pages as needed]

Nevada City Farmers Market Association
Description

The Nevada City Farmers Market Association's mission is: To advance consumer education by creating and supporting a meeting place for the community to have direct access to regional producers who practice sustainable agriculture; to create and support programs that provide free and low-cost food products to children seniors and low-income families; to serve the public interest by creating a meeting place for the community and social welfare organizations; and to originate and/or support other activities consistent with the above.

Each Saturday the Farmers Market consists of two separate events. See attached map.

The Certified Farmers Market, CFM: is on the east side of Union Street. Typically there are about 15 certified producers, that is, farmers, in single and double booths. Prior to 2008 there were several local farmers markets. These markets were either non-certified and/or admitted non-local producers; none considered farming practices as an admission criterion. The NCFMA was created to provide a venue where local producers who practice sustainable farming methods were competing amongst themselves for the following reasons:

- When an event is called a "farmers market" many consumers assume that the sellers are farmers. But at a non-certified market individuals may be resellers.
- We are adjacent to California's food basket, the Central Valley. In spring, at the beginning of the local market season when customer allegiances are being formed, the display at a Central Valley producer's booth will have greater variety than is possible at our elevation. Many consumers, accustomed to shopping at supermarkets, have lost knowledge of their local growing season.
- Sustainable and/or organic farming are typically more expensive than other methods of cultivation.

The Nevada County Ag Commissioner and the California Department of Food and Agriculture, CDFA, regulate the CFM. Our market manager, Stephanie Stevens, and our volunteer operations manager, Jane Sangwine-Yager, have both received training by these agencies.

The Community Event: occurs on the west side of Union Street and in Robinson Plaza. Typically there are about 16 vendors, 1 to 3 community booths, the market booth and, for part of the season, the Tasting Booth. By CDFA regulation, only certified producers may sell within a CFM. The Nevada County Department of Environmental Health regulates the community event. Our current market manager, Stephanie Stevens, and our past manager and current board member, Mali Dyck, have both received training by Environmental Health.

i. Vendors: The Community Event is held, in part, to support local non-producers. The vendors sell food and value-added products like hand made soap and crafts. The NCFMA selects non-producers who complement its mission: They are local and where applicable, they use locally grown, organic, or fair-trade ingredients.
ii. Community Groups: On a space available basis, the NCFMA provides booth space at no cost to various community groups to publicize their activities.
iii. Market Booth: In addition to being the information and management center of the market, the Market Booth dispenses Electronic Benefits Transfer, EBT. At the request of its members, the NCFMA became the first CFM in Nevada County to participate in the EBT (food stamps) program. EBT clients use a point-of-sale machine to purchase one-dollar wooden tokens as market script.
iv. Tasting Booth: At the request of its members, in 2013 the NCFMA began a tasting booth at the Farmers Market. At the beginning of each market, produce is collected from producers, cut up for raw samples or cooked, and made available at no cost to consumers. The Tasting Booth is permitted and inspected by the Nevada County Department of Environmental Health.

Volunteers: The NCFMA supports a group of local residents who volunteer. At any given market there will be 10 to 12 volunteers participating in all or part of setup, managing the market booth and takedown. They set out tables and chairs, decorate the street with flags, set up the Market and Tasting Booths, and assist with traffic control.

NEVAD-1 OP ID: CG

CERTIFICATE OF LIABILITY INSURANCE

DATE (MM/DD/YYYY) 10/20/2017

THIS CERTIFICATE IS ISSUED AS A MATTER OF INFORMATION ONLY AND CONFERS NO RIGHTS UPON THE CERTIFICATE HOLDER. THIS CERTIFICATE DOES NOT AFFIRMATIVELY OR NEGATIVELY AMEND, EXTEND OR ALTER THE COVERAGE AFFORDED BY THE POLICIES BELOW. THIS CERTIFICATE OF INSURANCE DOES NOT CONSTITUTE A CONTRACT BETWEEN THE ISSUING INSURER(S), AUTHORIZED REPRESENTATIVE OR PRODUCER, AND THE CERTIFICATE HOLDER.

IMPORTANT: If the certificate holder is an ADDITIONAL INSURED, the policy(ies) must be endorsed. If SUBROGATION IS WAIVED, subject to the terms and conditions of the policy, certain policies may require an endorsement. A statement on this certificate does not confer rights to the certificate holder in lieu of such endorsement(s).

PRODUCER
Pro Insur,Inc. dba
Campbell Risk Management
9595 Whitley Drive, Suite 204
Indianapolis, IN 46240
Larry Spilker ext 203

CONTACT NAME: Larry Spilker ext 203
PHONE (A/C, No, Ext): 317-848-9075 FAX (A/C, No): 317-848-9093
E-MAIL ADDRESS: lspilker@campbellrisk.com

INSURER(S) AFFORDING COVERAGE	NAIC #
INSURER A : Capitol Indemnity Corporation	10472
INSURER B :	
INSURER C :	
INSURER D :	
INSURER E :	
INSURER F :	

INSURED
Nevada City Farmers Market
426 Commercial Street
Nevada City, CA 95959

COVERAGES CERTIFICATE NUMBER: REVISION NUMBER:

THIS IS TO CERTIFY THAT THE POLICIES OF INSURANCE LISTED BELOW HAVE BEEN ISSUED TO THE INSURED NAMED ABOVE FOR THE POLICY PERIOD INDICATED. NOTWITHSTANDING ANY REQUIREMENT, TERM OR CONDITION OF ANY CONTRACT OR OTHER DOCUMENT WITH RESPECT TO WHICH THIS CERTIFICATE MAY BE ISSUED OR MAY PERTAIN, THE INSURANCE AFFORDED BY THE POLICIES DESCRIBED HEREIN IS SUBJECT TO ALL THE TERMS, EXCLUSIONS AND CONDITIONS OF SUCH POLICIES. LIMITS SHOWN MAY HAVE BEEN REDUCED BY PAID CLAIMS.

INSR LTR	TYPE OF INSURANCE	ADDL INSD	SUBR WVD	POLICY NUMBER	POLICY EFF (MM/DD/YYYY)	POLICY EXP (MM/DD/YYYY)	LIMITS	
A	X COMMERCIAL GENERAL LIABILITY						EACH OCCURRENCE	$ 1,000,000
	CLAIMS-MADE X OCCUR	X		CP02742286	12/03/2017	12/03/2018	DAMAGE TO RENTED PREMISES (Ea occurrence)	$ 100,000
							MED EXP (Any one person)	$ 5,000
							PERSONAL & ADV INJURY	$ 1,000,000
	GEN'L AGGREGATE LIMIT APPLIES PER:						GENERAL AGGREGATE	$ 2,000,000
	X POLICY PRO-JECT LOC						PRODUCTS - COMP/OP AGG	$ 2,000,000
	OTHER:							$
	AUTOMOBILE LIABILITY						COMBINED SINGLE LIMIT (Ea accident)	$
	ANY AUTO						BODILY INJURY (Per person)	$
	ALL OWNED AUTOS / SCHEDULED AUTOS						BODILY INJURY (Per accident)	$
	HIRED AUTOS / NON-OWNED AUTOS						PROPERTY DAMAGE (Per accident)	$
								$
	UMBRELLA LIAB / OCCUR						EACH OCCURRENCE	$
	EXCESS LIAB / CLAIMS-MADE						AGGREGATE	$
	DED / RETENTION $							$
	WORKERS COMPENSATION AND EMPLOYERS' LIABILITY						PER STATUTE / OTH-ER	
	ANY PROPRIETOR/PARTNER/EXECUTIVE OFFICER/MEMBER EXCLUDED? Y/N (Mandatory in NH)	N/A					E.L. EACH ACCIDENT	$
	If yes, describe under DESCRIPTION OF OPERATIONS below						E.L. DISEASE - EA EMPLOYEE	$
							E.L. DISEASE - POLICY LIMIT	$

DESCRIPTION OF OPERATIONS / LOCATIONS / VEHICLES (ACORD 101, Additional Remarks Schedule, may be attached if more space is required)

The City of Nevada, is an additional Insured.

CERTIFICATE HOLDER

City of Nevada
317 Broad Street
Nevada, CA 95959

CANCELLATION

SHOULD ANY OF THE ABOVE DESCRIBED POLICIES BE CANCELLED BEFORE THE EXPIRATION DATE THEREOF, NOTICE WILL BE DELIVERED IN ACCORDANCE WITH THE POLICY PROVISIONS.

AUTHORIZED REPRESENTATIVE

© 1988-2014 ACORD CORPORATION. All rights reserved.

The ACORD name and logo are registered marks of ACORD

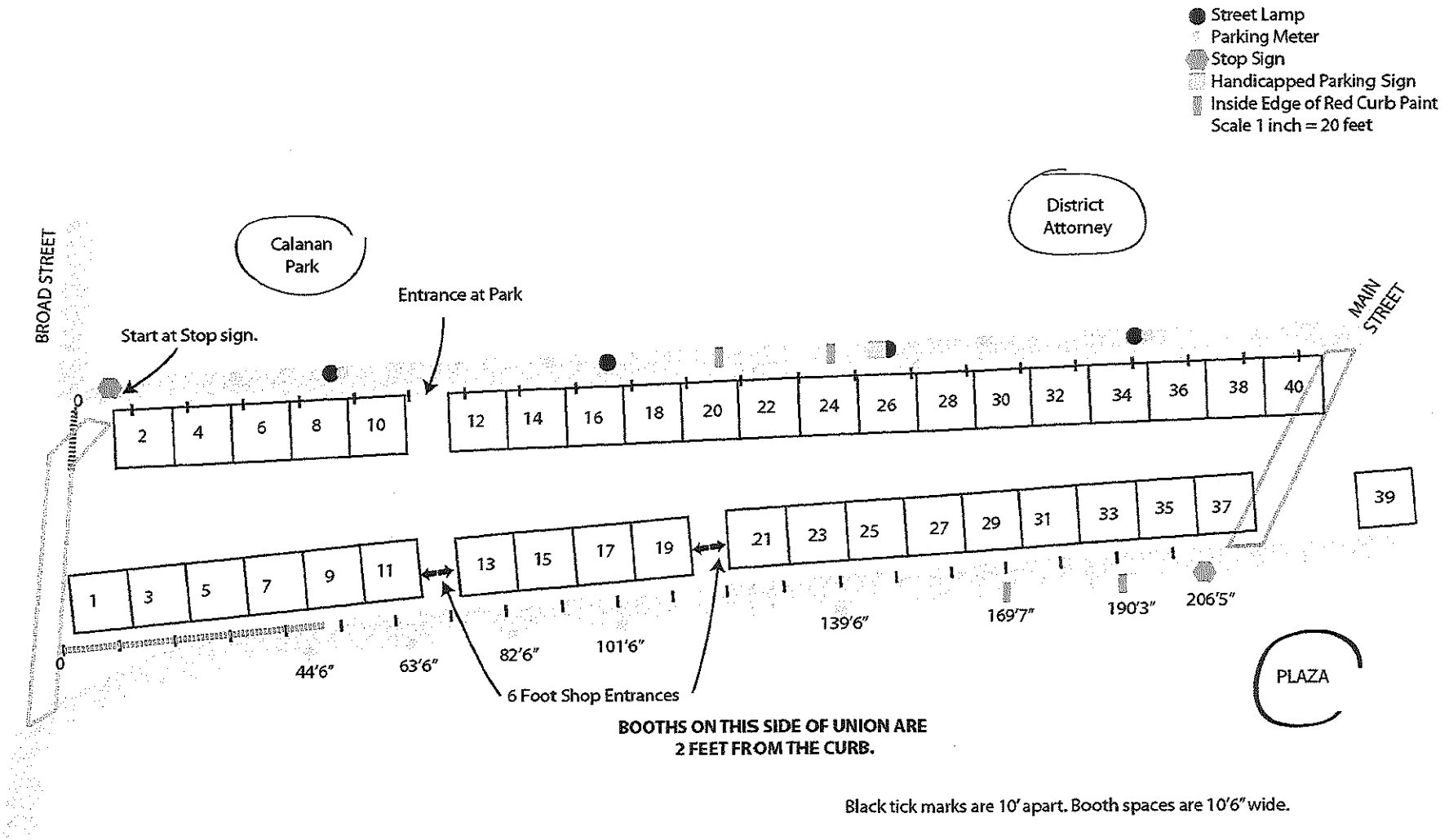

Black tick marks are 10' apart. Booth spaces are 10'6" wide.

Q3 2017

City of Nevada City Sales Tax *Update*

Fourth Quarter Receipts for Third Quarter Sales (July - September 2017)

Nevada City In Brief

Nevada City's receipts from July through September were 9.6% above the third sales period in 2016.

Periodic onetime sales accounted for the spike in the business and industry group and the overall gain in gross receipts. Fuel-related sectors benefited from higher prices while food and drugs posted positive returns.

Restaurant summer season performance was boosted by double payments. Once adjusted, actual revenues dipped 3.9%. The countywide use tax allocation pool has become a significant portion of the City's sales tax base.

Receipts from the City's three voter approved transaction taxes increased 45.5% compared to a year ago. Effective April 2017, Measure C contributed to this gain. The existing Measure L will expire in March 2018.

Net of aberrations, taxable sales for all of Nevada County grew 5.3% over the comparable time period; the Far North region was up 3.3%.

Sales Tax by Major Business Group

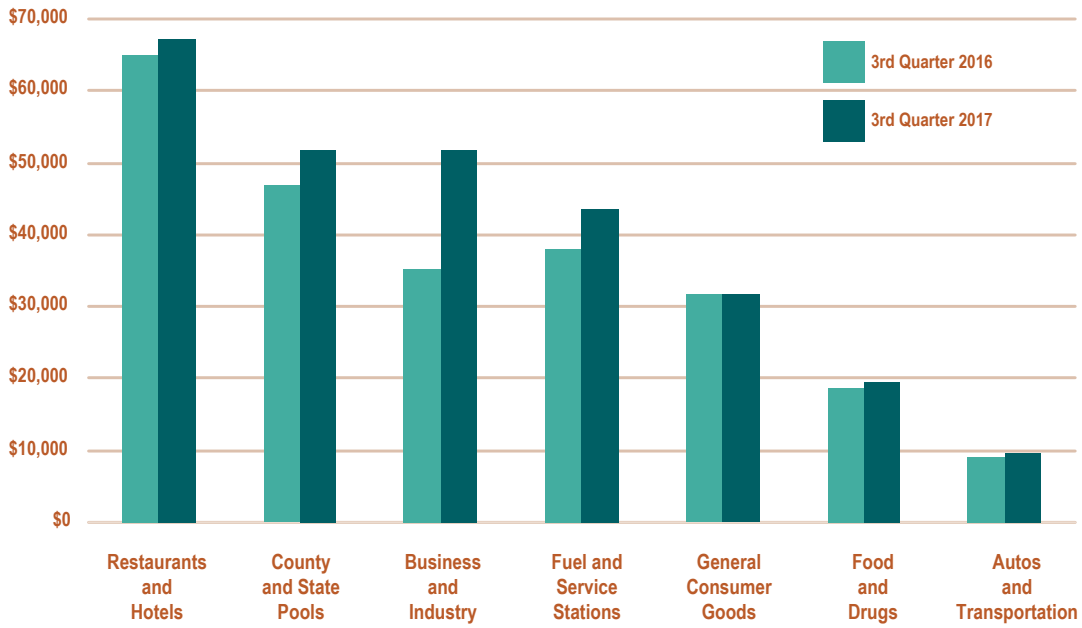

Top 25 Producers

In Alphabetical Order

- 49er Communications
- Bonanza Market
- California Organics
- Crazy Horse Saloon & Grill
- Express Mart & Liquor
- Friar Tucks Restaurant
- Golden Era
- Jernigans Tap House & Grill
- JH Petroleum
- Leftys Grill
- Mi Pueblo Taqueria
- New Moon Cafe
- Northridge of Nevada City
- Plaza Tire & Auto Service
- Port of Subs Express Market
- Riebes Auto Parts
- Robinson Enterprises
- Sierra Metal Fabricators
- Sopa Thai Cuisine
- SPD Market
- Stone House
- Telestream
- Three Forks Bakery & Brewing Company
- Tour of Nevada City Bicycle Shop
- Vital Garden Supply

Revenue Comparison

Two Quarters – Fiscal Year To Date

	2016-17	2017-18
Point-of-Sale	$414,396	$435,717
County Pool	93,829	99,405
State Pool	154	70
Gross Receipts	**$508,380**	**$535,192**

Published by HdL Companies in Winter 2018
www.hdlcompanies.com | 888.861.0220
HdL COMPANIES

NOTES

Statewide Trends

After factoring for accounting anomalies, local government's one-cent share of statewide sales and use tax from July through September sales was 3.6% higher than 2016's summer quarter.

Rising fuel prices, increased demand for building-construction materials and the continuing acceleration in online shopping for merchandise shipped from out-of-state that is expanding receipts from the countywide use tax allocation pools were the primary contributors to the overall increase.

This quarter marked the anticipated leveling off of auto sales while agriculture and transit-related purchases helped boost otherwise tepid gains in business-industrial receipts. Restaurant sales exhibited healthy overall gains of 3.5% although growth rates are slowing from previous quarters.

Receipts from consumer goods sold by brick and mortar stores were up 0.7% over the previous year while revenues from online purchases grew 13.3%.

Cannabis Taxation

A 15% excise tax on retail cannabis and cannabis products along with a cultivation tax and sales tax on recreational uses take effect on January 1, 2018.

Significant sales tax revenues are not expected until late 2018-19 as retail start-ups comply with lengthy state and local permitting processes. Although sales of medicinal cannabis became exempt in 2016 for purchasers with a state issued Medical Marijuana ID card, jurisdictions with dispensaries continue to receive sales tax from that source as most patients prefer to use a note from their physicians.

Some decline in revenues from medical dispensaries are expected as users' transition to new purchase options and because of lower prices caused by anticipated overproduction and the six month window that suppliers have to sell existing inventory grown under previous regulations.

Sales Tax and Natural Disasters

The recent firestorm tragedies have raised questions on potential bumps in sales tax revenues from reconstruction and recovery activities.

HdL analyzed the sales tax data from the 1991 Oakland Hills, 2003 San Diego Cedar and 2007 San Diego Witch fires which involved the combined loss of over 7,700 structures. Surprisingly, there were no identifiable gains in construction and auto-related purchases within the impacted areas during the five years after each event with receipts following normal economic cycles experienced by the state as a whole.

Further analysis suggests that though the individual losses are catastrophic, purchases of replacement items are a small fraction of the impacted area's total spending and is often spread to other jurisdictions where disaster victims relocate. Tax receipts from construction spending are defused over time because of lengthy claims and permitting processes that cause up to 40% of disaster victims to relocate leaving vacant lots that are not immediately redeveloped.

Sales Per Capita

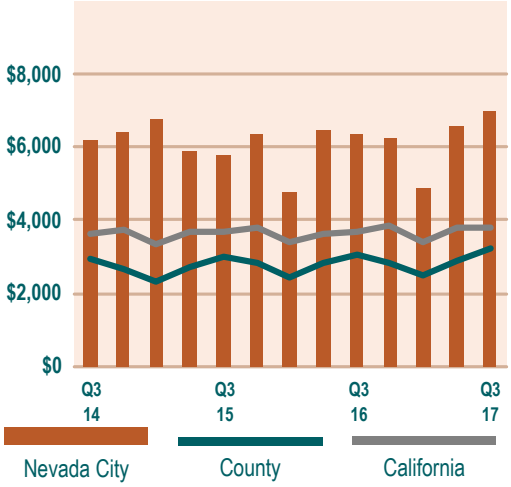

County Overall 3Q YOY Receipts % Change

Major Industry Groups	Cash	Adjusted*
Autos and Transportation	3.6%	5.5%
Building and Construction	7.2%	6.1%
Business and Industry	3.4%	-0.5%
Food and Drugs	4.2%	2.3%
Fuel and Service Stations	12.3%	15.5%
General Consumer Goods	-4.6%	-2.4%
Restaurants and Hotels	9.1%	4.0%
County and State Pools	6.5%	8.8%
Total	**5.4%**	**5.3%**

*Accounting anomalies factored out

Revenue By Business Group

Nevada City This Quarter

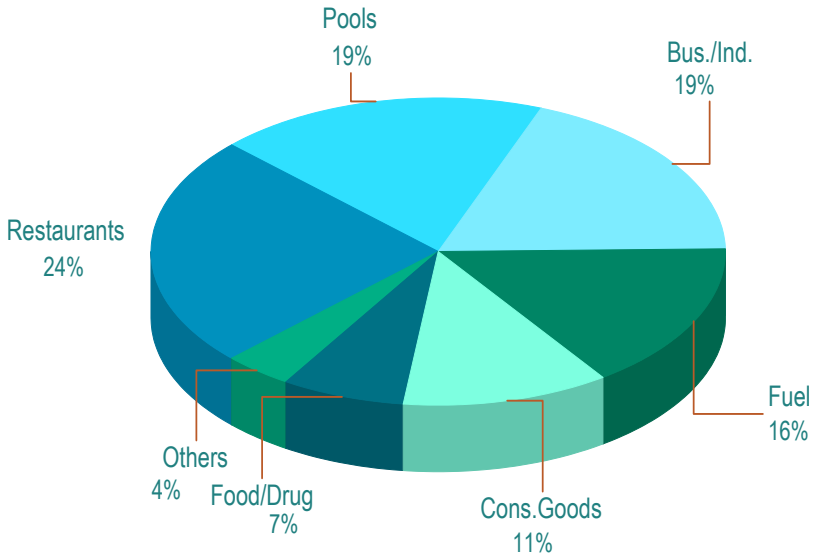

REPORT TO CITY COUNCIL

City of Nevada City
317 Broad Street
Nevada City CA 95959
www.nevadacityca.gov

APRIL 11, 2018

TITLE: Award Of Contract For Adams Street And Nile Street Improvements In Nevada City

RECOMMENDATION: Pass Resolution 2018-XX Awarding a contract to Simpson & Simpson Inc. in the amount of $404,763.00 plus $35,000.00 contingencies for Adams Street and Nile Street Improvements in Nevada City and authorize the Mayor to sign.

CONTACT: Bryan K. McAlister, City Engineer

BACKGROUND/DISCUSSION: Project Location: In the City of Nevada City, along Adams Street and Nile Street, from the intersection of Long/ Adams to the intersection of Nile/ Nimrod.

Project Scope: The project consists of new sidewalk on Adams Street and Nile Street with connections to sidewalks on adjacent streets. No sidewalk presently exists in this area. The project provides safe, convenient and efficient pedestrian access to residents and visitors to Pioneer Park.

City staff advertised with a public notice to contractors and received five competitive bids on March 27th 2018. Bids received are as follows:

- Simpson & Simpson, Newcastle CA $ 404,763.00
- Western Engineering, Loomis CA $ 703,050.00
- Central Valley Engineering, Roseville CA $ 551,545.00
- Hansen Bros. Enterprises, Grass Valley CA $ 524,607.00

Simpson & Simpson was selected as the lowest responsive and responsible bidder.

FISCAL CONSIDERATIONS: The project will be funded by CMAQ and Toll Credit funds for the amount of $310,000. The remainder will be funded with Measure S funds.

ATTACHMENT:

- ✓ Contract for Adams Street and Nile Street Improvements in Nevada City
- ✓ Resolution 2018-XX

CITY OF NEVADA CITY

NEVADA CITY, CALIFORNIA 95959

CONTRACT DOCUMENTS AND SPECIFICATIONS

FOR

STREET IMPROVEMENTS
ADAMS STREET AND NILE STREET

IN

NEVADA CITY

BRYAN MCALISTER, P.E., P.L.S.
CITY ENGINEER
317 BROAD STREET
NEVADA CITY, CALIFORNIA 95959
(530) 265-2496

TABLE OF CONTENTS

PART A - LEGAL AND PROCEDURAL DOCUMENTS

	Page No.
Notice to Contractor's	A-3
General Requirements	A-4
Information For Bidders	A-5
Bid Proposal	A-8
Bid Schedule	A-9
List of Subcontractors	A-10
Agreement	A-20
General Conditions	A-22

PART B - GENERAL CONDITIONS

Index		B-2
1	Definitions	B-6
2	Preliminary Matters	B-8
3	Correlation, Interpretation, and Intent of Contract Documents	B-9
4	Availability of Lands; Physical Conditions; Reference Points	B-10
5	Bonds of Insurance	B-11
6	Contractor's Responsibilities	B-14
7	Work by Others	B-21
8	Owner's Responsibilities	B-22
9	Engineer's Status During Construction	B-23
10	Changes in the Work	B-25
11	Change of the Contract Price	B-25
12	Change of the Contract Time	B-29
13	Warranty and Guarantee; Tests and Inspections; Correction, Removal or Acceptance of Defective Work	B-30
14	Payments and Completion	B-32
15	Suspension of Work and Termination	B-37
16	Arbitration	B-38
17	Miscellaneous	B-38

SUPPLEMENTARY CONDITIONS

1	Standard Codes	B-41
2	Abbreviations	B-41
3	Time of Completion	B-41
4	Damages for Avoidable Delay	B-42
5	Insurance Requirements	B-42
6	Indemnity	B-42
7.	General Notes	B-43
8.	Project Specifications	B-45
9.	Prevailing Wages	B-49
10.	Federal-Aid Contract Language	B-56

PART A

LEGAL AND PROCEDURAL DOCUMENTS

Item Number	Title	Page
1	Notice to Contractors	A-3
2	General Requirements	A-4
3	Information For Bidders	A-5
4	Bid Proposal	A-8
5	Bid Schedule	A-9
6	List of Subcontractors	A-10
7	Agreement	A-20
8	General Conditions	A-22

NOTICE TO CONTRACTOR'S

Sealed proposals for STREET IMPROVEMENTS ~ ADAMS STREET AND NILE STREET will be received by the City at the City Hall, 317 Broad Street, Nevada City, California, 95959, until **3:00 p.m. on March 27, 2018**, at which time, or as soon thereafter as practicable, all such proposals will be publicly opened and read in the Chambers of the City at said City Hall.

Bids shall be enclosed and sealed in an envelope addressed to the City of Nevada City at the above stated address and shall be marked "STREET IMPROVEMENTS ~ ADAMS STREET AND NILE STREET."

The work includes the furnishing of all labor, materials, and equipment required for the job in accordance with the plans, specifications and other contract documents as set forth by the City Engineer. Such documents are on file with the City at the City Hall and are available for inspection during office hours.

There is a **mandatory pre-bid meeting on March 15th, 2018 at 1PM** with a site walk beginning at the intersection of Nimrod and Adams Street.

The City reserves the right to reject all bids; or to accept any portion of bid schedule; to reject any bid which is incomplete or irregular; to determine which proposal is, in its judgment, the lowest responsible bid of a responsible bidder and to waive any informality or minor irregularity of any bid.

DATED: March 5, 2018

CITY OF NEVADA CITY

Bryan McAlister

Bryan McAlister, P.E.
City Engineer

DIVISION I

GENERAL REQUIREMENTS

This specification and accompanying drawings cover the material to be furnished and labor to be performed of STREET IMPROVEMENTS ~ ADAMS STREET AND NILE STREET, located in the City of Nevada City, State of California and shall consist of all work hereinafter specified and shown on the accompanying drawings.

1. General requirements of the specifications:

General requirements hereunder apply to the technical sections of the specifications as applicable whether repeated therein or not.

The term "Engineer" will hereinafter mean the office of the City Engineer preparing the drawings and specifications, or his authorized representatives. All correspondence and approvals, shop drawings, submittals, etc., called for in the specifications shall be directed to the designer.

All work shall be executed to the entire satisfaction of the Engineer, and shall consist of all work hereinafter specified and shown on the accompanying drawings.

Should any contractor be in doubt as to the intent and meaning of the drawings and specifications, he/she shall make written inquiry of Engineer regarding the portion or portions of the work in question, from whom he/she shall receive a written answer; and if the drawings and specifications are in error or do not fully explain the portion or portions of the work in question, the inquiry and answer will be sent to the contractor.

Neither the OWNER, engineer, or his/her representative will be responsible in any manner for any oral answers to inquiries or for any oral instruction whatsoever.

INFORMATION FOR BIDDERS

1. Inspection of Site

Each bidder shall inspect the site of the work in order to determine the location of the proposed work and the actual conditions of the site. If in the course of such inspection a bidder finds conditions which appear to conflict with the letter or intent of the contract documents, or with any other information furnished him, he may apply to the City for additional information or for clarification before submitting his bid.

The submission of a proposal by the bidder shall constitute an acknowledgment that, if awarded the contract, he has relied on his own knowledge of (a) the site of the work, (b) access to the site, (c) availability of existing utilities and (d) all other data and matters required for the performance of the contract. No claim for additional compensation will be allowed which is based upon a lack of knowledge of the above matters.

2. Examination of Contract Documents

Each bidder shall thoroughly examine the plans, specifications, and all other contract documents. The submission of a proposal shall constitute an acknowledgment that the bidder has made such examination, and the failure of a bidder to do so shall in no way relieve him from any obligation under the bid or the contract. No claim for additional compensation will be allowed which is based upon a lack of knowledge of any contract document.

3. Interpretation of Contract Documents; Addenda

No interpretation of the plans, specifications, or other contract documents will be made orally to any bidder. Oral interpretations or clarifications will be without legal effect. Each request for such interpretation shall be in writing addressed to City Engineer, City of Nevada City, 317 Broad Street, Nevada City, California 95959, and must be received by him at least five (5) days prior to the date fixed for the opening of bids. Any such interpretations, and any supplemental instructions, will be in the form of written addenda to the specifications, which, if issued, will be sent by certified mail, with return receipt requested, to all prospective bidders at their addresses furnished for such purposes, not later than three (3) days prior to the date fixed for the opening of bids. Failure of any bidder to receive any such addendum or interpretation shall not relieve such bidder from any obligation under his bid as submitted. All addenda so issued shall become part of the contract documents.

4. Proposals

Proposals shall be made on the Bid Proposal forms supplied herein. All proposals shall state the prices proposed, both in writing and in figures, shall give all other required information and shall be signed by the bidder or his authorized representative. If the proposal is made by an individual, his name, signature, and post office address shall be shown; if made by a partnership, the name and post office address of the firm and the signature of at least one of the general partners must be shown; if made by a corporation, the proposal shall show the name and post office address of the corporation, the state in which the corporation was formed and the title of the person signing on behalf of the corporation.

Each proposal shall be enclosed in a sealed envelope and marked as specified in the notice to CONTRACTOR'S. Any erasures, alterations, omissions, or irregularities of any kind may result in a rejection of the bid. No oral, telephonic, or telegraphic proposals or modifications will be considered.

5. Bid Prices

Bid prices shall include all costs and expenses necessary for the completion of the contract, including but not limited to the furnishing of all labor and services, superintendence, material, tools, equipment, power and water, and all federal, state and local taxes. In the event of a difference between the price quoted in words and a price quoted in figures for the same quotation, the words shall be the amount bid.

6. List of Subcontractors

As required by Section 4104 of the Government Code, each proposal shall include (on a sheet attached to the Bid Proposal form) a statement of the names and location of the place of business of each subcontractor who will perform work or labor or render service to the prime contractor in or about the construction of the work or improvement, or a subcontractor licensed by the State of California who, under subcontract to the prime contractor, specifically fabricates and installs a portion of the work of improvement according to detailed drawings contained in the plans and specifications, in an amount in excess of one-half of one percent of the prime contractor's total bid. Such statement shall show also the portion of the work which will be done by each such subcontractor.

7. Bidder's Security

No bid bond shall be required for this project.

8. Rejection of Bids

The City reserves the right to reject all bids; to reject any bid which is incomplete or irregular, or which is not accompanied by adequate bid security; to determine which proposal is, in its judgment, the lowest responsible bid of a responsible bidder; and to waive any informality or minor irregularity in any bid.

9. Award of Contract

Within forty-five (45) days after the time announced for the opening bid, the City will act either to accept a proposal or to reject all proposals. The acceptance of a proposal will be made by delivering in person or by certified mail to the successful bidder a written notice of award of the contract.

10. Execution of Contract

Within ten (10) days after receiving the notice of award of the contract, the successful bidder shall execute the Agreement, in duplicate, and furnish to the City all bonds and evidences of insurance, in proper form, as required by the General Conditions.

11. Forms required for Bid Proposal

In accordance with provisions of Federally Funded projects, the contractor shall provide these forms at time of bid:

- Signed Bid Proposal
- Bid Schedule
- Bidder's List of Subcontractors (DBE and Non-DBE)
- Exhibit 15-G Local Agency Bidder DBE Commitment
- Exhibit 15-H DBE Information - Good Faith Efforts (if DBE Goal not met)
- EEO Certification
- Public Contract Code Statements (if any exceptions taken)
- Noncollusion Affidavit
- Debarment and Suspension Certification
- Nonlobbying Certification for Federal-aid Contracts
- Disclosure of Lobbying Activities

The above listed documents and all Federal and State Labor Code requirements included herein are considered part of the Bid Proposal and Contract Agreement.

BID PROPOSAL

STREET IMPROVEMENTS ~ ADAMS STREET AND NILE STREET
Nevada City, CA

TO: City of Nevada City, City Hall, Nevada City, California.

The undersigned, as a bidder, submits the following proposal for the STREET IMPROVEMENTS ~ ADAMS STREET AND NILE STREET in the City of Nevada City, California, and offers to perform all work and furnish all labor, materials, tools, equipment, power and water as required for the completion of said project, in accordance with the plans, specifications and all other contract documents referred to in the Notice to CONTRACTOR'S. The bidder has inspected the project site and has examined all conditions affecting the proposed work. The bidder is licensed with Contractors State License Board and is registered as a public works contractor with the Department of Industrial Relations as required to bid on this contract.

If this bid is accepted, the bidder agrees to execute the Agreement, and furnish to the City all required bonds and evidences of insurance, within ten (10) days after receiving written notice of the award of contract, and complete the project within sixty (60) working days after receiving written notice to proceed.

Attached to this bid and made a part hereof is a list of proposed subcontractors, setting forth all information required by Section 4104 of the Government Code. Also attached are the following forms required for Federally funded projects: Exhibit 15-G Local Agency Bidder DBE Commitment, Exhibit 15-H DBE Information - Good Faith Efforts (if DBE Goal not met) , EEO Certification, Public Contract Code Statements (if any exceptions taken), Noncollusion Affidavit, Debarment and Suspension Certification, Nonlobbying Certification for Federal-aid Contracts and Disclosure of Lobbying Activities.

The bidder acknowledges receipt of the following addenda: BID Addendum NO. 1

The undersigned is (state whether individual, partnership or corporation) Corporation.

DATED: 3/27/2018

FIRM NAME: Simpson & Simpson, INC

ADDRESS: 10001 Ophir Road

Newcastle, CA 95658

PHONE: 530-885-4354

CONTRACTOR'S LICENSE NO: 184056

EXPIRATION: 12/31/2019

BY: _____
Signature of OWNER or Authorized Officer

Contact Person: Steve Simpson

BID SCHEDULE

CITY OF NEVADA CITY
STREET IMPROVEMENTS ~ ADAMS STREET AND NILE STREET

BID FORM

Item No.	Quantity	Unit	Item Description	Unit Price	Total Price
1	1	LS	Mobilization	$ LS	$ 15,000
2	11	EA	Tree Removal	1636.36	18,600
3	730	LF	Curb	31.15	22,740
4	1,120	LF	Curb & Gutter	45.06	50,472
5	5,800	SF	Sidewalk (including Driveways)	10.62	61,617
6	9	EA	Curb Ramp	1801.33	16,212
7	840	SF	Retaining Wall	130.95	110,000
8	1	LS	Grind Asphalt	LS	15,200
9	100	LF	Asphalt Dike	67.35	6735
10	125	TN	Asphalt Paving	186.89	23,362
11	2,600	SF	Aggregate Base / New Subgrade	12.85	33,410
12	2	EA	Drainage Inlet	3,000	6,000
13	1	LS	Signage and Striping	LS	7865
14	1	LS	Traffic Control	LS	18,000

TOTAL $404,763

LIST OF SUBCONTRACTORS

NAME (DBE Y/N)	PLACE OF BUSINESS CONTRACTORS LICENSE	BID ITEMS OF WORK % SUBCONTRACTED
1. Sierra Striping NO	9725 Del Road, Roseville 95747 License # 65190	Signage & Striping
2. Cyrus Tree Service NO	2036 Nev. City Hwy, GV 95945 License # 803287	Tree Removal
3. Dan Reinhart No	Nevada City License # 514635	Masonry
4. Bobby Jones Concrete	Grass Valley	Concrete Construction
5.		
6.		
7.		
8.		
9.		
10.		

EXHIBIT 15-G CONSTRUCTION CONTRACT DBE COMMITMENT

EXHIBIT 15-G CONSTRUCTION CONTRACT DBE COMMITMENT

1. Local Agency: City of Nevada City
2. Contract DBE Goal: 4.0%
3. Project Description: CML 5018(026) Adams / Nile Street Sidewalk Project
4. Project Location: Adams / Nile Streets in Nevada City
5. Bidder's Name: Simpson & Simpson, INC
6. Prime Certified DBE: ☐
7. Bid Amount: $404,763
8. Total Dollar Amount for **ALL** Subcontractors:
9. Total Number of **ALL** Subcontractors:

10. Bid Item Number	11. Description of Work, Service, or Materials Supplied	12. DBE Certification Number	13. DBE Contact Information (Must be certified on the date bids are opened)	14. DBE Dollar Amount

Local Agency to Complete this Section

21. Local Agency Contract Number:
22. Federal-Aid Project Number:
23. Bid Opening Date:
24. Contract Award Date:

Local Agency certifies that all DBE certifications are valid and information on this form is complete and accurate.

25. Local Agency Representative's Signature
26. Date
27. Local Agency Representative's Name
28. Phone
29. Local Agency Representative's Title

15. TOTAL CLAIMED DBE PARTICIPATION: $ 0 %

IMPORTANT: Identify all DBE firms being claimed for credit, regardless of tier. Names of the First Tier DBE Subcontractors and their respective item(s) of work listed above must be consistent, where applicable with the names and items of the work in the "Subcontractor List" submitted with your bid. Written confirmation of each listed DBE is required.

16. Preparer's Signature
17. Date: 3-30-16
18. Preparer's Name: C Petralia
19. Phone: 530 885 4354
20. Preparer's Title: admin assistant

DISTRIBUTION: 1. Original – Local Agency
2. Copy – Caltrans District Local Assistance Engineer (DLAE). Failure to submit to DLAE within 30 days of contract execution may result in de-obligation of federal funds on contract. Include additional copy with award package.

ADA Notice: For individuals with sensory disabilities, this document is available in alternate formats. For information call (916) 654-6410 or TDD (916) 654-3880 or write Records and Forms Management, 1120 N Street, MS-89, Sacramento, CA 95814.

EXHIBIT 15-H DBE INFORMATION —GOOD FAITH EFFORTS

DBE INFORMATION - GOOD FAITH EFFORTS

Project: STREET IMPROVEMENTS ~ ADAMS STREET AND NILE STREET

The City of Nevada City established a Disadvantaged Business Enterprise (DBE) goal of 4.0% for this project. The information provided herein shows that a good faith effort was made.

Lowest, second lowest and third lowest bidders shall submit the following information to document adequate good faith efforts. Bidders should submit the following information even if the "Local Agency Bidder DBE Commitment" form indicates that the bidder has met the DBE goal. This will protect the bidder's eligibility for award of the contract if the administering agency determines that the bidder failed to meet the goal for various reasons, e.g., a DBE firm was not certified at bid opening, or the bidder made a mathematical error.

Submittal of only the "Local Agency Bidder DBE Commitment" form may not provide sufficient documentation to demonstrate that adequate good faith efforts were made.

The following items are listed in the Section entitled "Submission of DBE Commitment" of the Special Provisions:

A. The names and dates of each publication in which a request for DBE participation for this project was placed by the bidder (please attach copies of advertisements or proofs of publication):

Publications	Dates of Advertisement

B. The names and dates of written notices sent to certified DBEs soliciting bids for this project and the dates and methods used for following up initial solicitations to determine with certainty whether the DBEs were interested (please attach copies of solicitations, telephone records, fax confirmations, etc.):

Names of DBEs Solicited	Date of Initial Solicitation	Follow Up Methods and Dates
Borg Fence	3/9/18	3/16/18 Call
CSI Engineering	3/9/18	3/16/18 Call

F. Efforts made to assist interested DBEs in obtaining necessary equipment, supplies, materials or related-assistance or services, excluding supplies and equipment the DBE subcontractor purchases or leases from the prime contractor or its affiliate:

G. The names of agencies, organizations or groups contacted to provide assistance in contacting, recruiting and using DBE firms (please attach copies of requests to agencies and any responses received, i.e., lists, Internet page download, etc.):

Name of Agency/Organization	Method/Date of Contact	Results
Sate of CA Business & Economic	3/9/18	Query Reports

Query was done online/not printed

H. Any additional data to support a demonstration of good faith efforts (use additional sheets if necessary):

NOTE: USE ADDITIONAL SHEETS OF PAPER IF NECESSARY.

Website used for query

www.dot.ca.gov

Office of Business & Economic Opportunity

CITY OF NEVADA CITY

EQUAL EMPLOYMENT OPPORTUNITY CERTIFICATION

The bidder, proposed subcontractor

Simpson & Simpson, INC, hereby certifies that he has / has not , participated in a previous contract or subcontract subject to the equal opportunity clauses, as required by Executive Orders 10925, 11114, or 11246, and that, where required, he has filed with the Joint Reporting Committee, the Director of the Office of Federal Contract Compliance, a Federal Government contracting or administering agency, or the former President's Committee on Equal Employment Opportunity, all reports due under the applicable filling requirements.

Note: The above certification is required by the Equal Employment Opportunity Regulations of the Secretary of Labor (41 CFR 60-1.7(b) (1)), and must be submitted by bidders and proposed subcontractors only in connection with contracts and subcontracts which are subject to the equal opportunity clause. Contracts and subcontracts which are exempt from the equal opportunity clause are set forth in 41 CFR 60-1.5. (Generally only contracts or subcontracts of $10,000 or under are exempt.)

Currently, Standard Form 100 (EEO-1) is the only report required by the Executive Orders or their implementing regulations.

Proposed prime contractors and subcontractors who have participated in a previous contract or subcontract subject to the Executive Orders and have not filed the required reports should note that 41 CFR 60-1.7(b) (1) prevents the award of contracts and subcontracts unless such contractor submits a report covering the delinquent period or such other period specified by the Federal Highway Administration or by the Director, Office of Federal Contract Compliance, U.S. Department of Labor.

CITY OF NEVADA CITY

PUBLIC CONTRACT CODE SECTION 10285.1 STATEMENT

In conformance with Public Contract Code Section 10285.1 (Chapter 376, Stats. 1985), the bidder hereby declares under penalty of perjury under the laws of the State of California that the bidder has_____ , has not ___X___ been convicted within the preceding three years of any offenses referred to in that section, including any charge of fraud, bribery, collusion, conspiracy, or any other act in violation of any state or Federal antitrust law in connection with the bidding upon, award of, or performance of, any public works contract, as defined in Public Contract Code Section 1101, with any public entity, as defined in Public Contract Code Section 1100, including the Regents of the University of California or the Trustees of the California State University. The term "bidder" is understood to include any partner, member, officer, director, responsible managing officer, or responsible managing employee thereof, as referred to in Section 10285.1.

Note: The bidder must place a checkmark after "has" or "has not" in one of the blank spaces provided. The above Statement is part of the Proposal. Signing this Proposal on the signature portion thereof shall also constitute signature of this Statement. Bidders are cautioned that making a false certification may subject the certifier to criminal prosecution.

PUBLIC CONTRACT CODE SECTION 10162 QUESTIONNAIRE

In conformance with Public Contract Code Section 10162, the Bidder shall complete, under penalty of perjury, the following questionnaire:

Has the bidder, any officer of the bidder, or any employee of the bidder who has a proprietary interest in the bidder, ever been disqualified, removed, or otherwise prevented from bidding on, or completing a federal, state, or local government project because of a violation of law or a safety regulation?

Yes No

If the answer is yes, explain the circumstances in the following space.

PUBLIC CONTRACT CODE 10232 STATEMENT

In conformance with Public Contract Code Section 10232, the Contractor, hereby states under penalty of perjury, that no more than one final unappealable finding of contempt of court by a federal court has been issued against the Contractor within the immediately preceding two-year period because of the Contractor's failure to comply with an order of a federal court which orders the Contractor to comply with an order of the National Labor Relations Board.

Note:
The above Statement and Questionnaire are part of the Proposal. Signing this Proposal on the signature portion thereof shall also constitute signature of this Statement and Questionnaire.
Bidders are cautioned that making a false certification may subject the certifier to criminal prosecution.

NONCOLLUSION AFFIDAVIT

(Title 23 United States Code Section 112 and
Public Contract Code Section 7106)

To the CITY of NEVADA CITY,
DEPARTMENT OF ENGINEERING PUBLIC WORKS.

In conformance with Title 23 United States Code Section 112 and Public Contract Code 7106 the bidder declares that the bid is not made in the interest of, or on behalf of, any undisclosed person, partnership, company, association, organization, or corporation; that the bid is genuine and not collusive or sham; that the bidder has not directly or indirectly induced or solicited any other bidder to put in a false or sham bid, and has not directly or indirectly colluded, conspired, connived, or agreed with any bidder or anyone else to put in a sham bid, or that anyone shall refrain from bidding; that the bidder has not in any manner, directly or indirectly, sought by agreement, communication, or conference with anyone to fix the bid price of the bidder or any other bidder, or to fix any overhead, profit, or cost element of the bid price, or of that of any other bidder, or to secure any advantage against the public body awarding the contract of anyone interested in the proposed contract; that all statements contained in the bid are true; and, further, that the bidder has not, directly or indirectly, submitted his or her bid price or any breakdown thereof, or the contents thereof, or divulged information or data relative thereto, or paid, and will not pay, any fee to any corporation, partnership, company association, organization, bid depository, or to any member or agent thereof to effectuate a collusive or sham bid.

Note:
The above Non-collusion Affidavit is part of the Proposal. Signing this Proposal on the signature portion thereof shall also constitute signature of this Non-collusion Affidavit.
Bidders are cautioned that making a false certification may subject the certifier to criminal prosecution.

DEBARMENT AND SUSPENSION CERTIFICATION

TITLE 49, CODE OF FEDERAL REGULATIONS, PART 29

The bidder, under penalty of perjury, certifies that, except as noted below, he/she or any other person associated therewith in the capacity of owner, partner, director, officer, manager:

- is not currently under suspension, debarment, voluntary exclusion, or determination of ineligibility by any Federal agency;
- has not been suspended, debarred, voluntarily excluded or determined ineligible by any Federal agency within the past 3 years;
- does not have a proposed debarment pending; and
- has not been indicted, convicted, or had a civil judgment rendered against it by a court of competent jurisdiction in any matter involving fraud or official misconduct within the past 3 years.

If there are any exceptions to this certification, insert the exceptions in the following space.

Exceptions will not necessarily result in denial of award, but will be considered in determining bidder responsibility. For any exception noted above, indicate below to whom it applies, initiating agency, and dates of action.

Notes: Providing false information may result in criminal prosecution or administrative sanctions.
The above certification is part of the Proposal. Signing this Proposal on the signature portion thereof shall also constitute signature of this Certification.

NONLOBBYING CERTIFICATION FOR FEDERAL-AID CONTRACTS

The prospective participant certifies, by signing and submitting this bid or proposal, to the best of his or her knowledge and belief, that:

(l) No Federal appropriated funds have been paid or will be paid, by or on behalf of the undersigned, to any person for influencing or attempting to influence an officer or employee of any Federal agency, a Member of Congress, an officer or employee of Congress, or an employee of a Member of Congress in connection with the awarding of any Federal contract, the making of any Federal grant, the making of any Federal loan, the entering into of any cooperative agreement, and the extension, continuation, renewal, amendment, or modification of any Federal contract, grant, loan, or cooperative agreement.

(2) If any funds other than Federal appropriated funds have been paid or will be paid to any person for influencing or attempting to influence an officer or employee of any Federal agency, a Member of Congress, an officer or employee of Congress, or an employee of a Member of Congress in connection with this Federal contract, grant, loan, or cooperative agreement, the undersigned shall complete and submit Standard Form-LLL, "Disclosure of Lobbying Activities," in conformance with its instructions.

This certification is a material representation of fact upon which reliance was placed when this transaction was made or entered into. Submission of this certification is a prerequisite for making or entering into this transaction imposed by Section 1352, Title 31, U.S. Code. Any person who fails to file the required certification shall be subject to a civil penalty of not less than $10,000 and not more than $100,000 for each such failure.

The prospective participant also agrees by submitting his or her bid or proposal that he or she shall require that the language of this certification be included in all lower tier subcontracts, which exceed $100,000 and that all such subrecipients shall certify and disclose accordingly.

AGREEMENT

THIS AGREEMENT is made this _____ day of _____, between the CITY OF NEVADA CITY, a municipal corporation, hereinafter called "City," and _____, hereinafter called "Contractor."

WHEREAS, City has caused to be prepared certain plans, specifications and other contract documents pertaining to the STREET IMPROVEMENTS ~ ADAMS STREET AND NILE STREET in said City: and

WHEREAS, after notice duly given, City has awarded the contract for such work to Contractor;

NOW, THEREFORE, IT IS AGREED by and between said parties as follows:

1. Scope of Work. The contractor agrees to furnish all labor, materials, tools and equipment, required to complete the STREET IMPROVEMENTS in Nevada City, California, in accordance with the plans, specifications and other contract documents hereinafter specified. All such work shall be performed in a good and workmanlike manner and to the satisfaction of the designer of said project.

2. Contract Price. As consideration for all such work, City agrees to pay to Contractor the total sum of _____ ($_____) Dollars, payable in the manner hereinafter set forth.

3. Contract Documents. The complete contract between the parties hereto consists of the Notice to CONTRACTOR'S, the Information to Bidders, the Bid Proposal, the Performance Bond, the Payment Bond, the General Conditions, the Plans and Specifications, and all other drawings and printed or written explanatory matter pertaining thereto. All of the foregoing documents are intended to cooperate, so that any work or requirement specified in any of them is to be carried out or observed the same as if mentioned in all.

4. Time for Performance. Within five (5) days after the execution of this Agreement, City shall give Contractor written Notice to Proceed, and thereafter Contractor shall commence the work and shall prosecute the same with due diligence until completion and acceptance by City; provided, however, that all such work shall be completed and ready for use within sixty (60) working days after Contractor receives said Notice to Proceed.

5. Extension of Time. If, because of adverse weather conditions, strikes, inability of the Contractor (through no fault on his/her part) to obtain necessary materials, or other cause beyond the reasonable control of Contractor, Contractor is unable to complete the required work within the allowed time, he shall be entitled to an extension or extensions of such time, commensurate with the unavoidable delay thus caused; provided, however that Contractor shall apply to City for approval of any such extension prior to the expiration of the time for performance as specified in the preceding paragraph.

6. Contractor's Failure to Complete Work. If Contractor fails to prosecute the work with such diligence as will insure its completion within the time hereinabove specified, or any extension thereof, or fails to complete such work within such time, or if Contractor shall otherwise violate this Agreement, City may give written notice to Contractor and his sureties of City's intention to terminate this Agreement unless, within five (5) days after services of such notice, satisfactory arrangements are made with the City for the completion of such work or the curing of such breach; and if such

arrangements are not made within such time, City may, at its option, terminate this Agreement by giving written notice of such termination to Contractor and his sureties.

7. Payments to Contractor. On or before the tenth day of each month during the progress of the work, Contractor shall submit to the Designer an itemized statement of all labor and materials incorporated into the improvement during the preceding month and the portion of the contract price applicable thereto. Upon the written approval of said statement by the Designer it shall be submitted to the City Council at its next regular or adjourned regular meeting, and within seven (7) days after approval by the City Council, City shall pay to Contractor a sum equal to ninety (90%) percent of the contract price apportionment. The remaining ten (10%) percent shall be paid to Contractor thirty-five (35) days after final acceptance of the work by City.

8. Indemnification. Contractor agrees to hold City, and its officers, agents, and employees harmless from any and all liability and claims for damages for death and personal injury, and for property damage, incident to or arising out of the operations of Contractor or any subcontractor under this Agreement, and Contractor further agrees to defend City, and its officers, agents, and employees in any and all lawsuits which may be brought for such damages caused, or alleged to have been caused, by such operations. In addition, Contractor agrees to furnish to the City evidences of insurance coverage as specified in the General Conditions. The approval of such insurance by City shall not constitute a waiver or limitation of any rights under this indemnity agreement, regardless of whether such insurance shall be held to be inapplicable to any such damage or claims therefore.

Executed in duplicate this _____ day of _____, _____.

ATTEST:

CITY OF NEVADA CITY
A Municipal Corporation

_____

By: _____
Mayor

_____
(Name of Contractor)

By: _____
(Signature of OWNER or
authorized officer)

GENERAL CONDITIONS

1. Inspection of Construction

The Engineer shall have access to the work and the site of the work at all times and the Contractor shall afford such access to the Engineer and shall furnish all relevant information requested by him. At the request of the Engineer the Contractor shall open for inspection any part of the work which has been covered up, and if any part of the work has been covered up in contravention of the instructions of the Engineer, or if on being opened up, is found not to be in accordance with the terms of the contract, the expense of opening and recovering shall be charged to the Contractor. If the work has been covered up but not in contravention of such instructions and is found to be in accordance with the terms of the contract, the actual cost of opening and recovering shall be borne by the City, and in such case, if the work of opening and recovering is done by the Contractor, it shall be considered as extra work and paid for accordingly.

2. Change Orders

If for any reason it becomes necessary or desirable to change the alignment, dimensions, or design of the work, the City shall have the right to issue written change orders therefore. If the Contractor considers that any such change involves extra work, he shall immediately so notify the Engineer in writing, and shall make claim for compensation for such work not later than the first day of the month following the month in which the work was performed. If, in the opinion of the Engineer, any change order results in a change in the amount of work performed, the contract price shall be adjusted for extra work or omitted work, as the case may be.

3. Contractor's Employees and Subcontractors

The Contractor shall at all times be responsible for the adequacy and efficiency of his employees and any subcontractor and the latter's employees. All workers shall have adequate skill and experience to perform properly the work assigned to them.

4. Errors and Omissions

If the Contractor in the course of the work becomes aware of any error or omission in the contract documents, or of any discrepancy between such documents and the physical conditions of the work site, he shall immediately inform the Engineer, who shall take such action as he may deem necessary in order to rectify the matter. Any work done after such discovery and without the authorization of the Engineer will be at the Contractor's risk.

5. Guaranty of Work

For a period of one (1) year after final acceptance of the work by the City, the Contractor shall make all repairs and replacements arising out of any defective workmanship or materials. If the Contractor fails to make such repairs or replacements within ten (10) days after receiving written notice to do so, or within such further time as may be allowed by the City, the City may undertake such repairs or replacements, in which case the Contractor shall be liable to the City for the cost thereof.

6. Contractor's Responsibility for Work

The Contractor shall be responsible for the proper care and protection of the work, and of all materials delivered to the work site, until completion of the work and its final acceptance by the City.

7. Performance Bond

A Performance bond shall be required for this project. This shall be provided at time of contract execution by a corporation incorporated under the laws of the State of California and licensed by the State to execute bonds and undertakings as sole SURETY. SURETY shall apply this bond for the faithful performance of any and all of the conditions and stipulations set forth in this bond and contract documents. In the case of any default in the performance of the conditions and stipulations of this undertaking, it is agreed that SURETY will apply the bond or any portion thereof, to the satisfaction of any damages, reclamation, assessments, penalties, or deficiencies arising by reason of such default.

8. Payment Bond

A payment (labor and materials) bond is required for public works contracts involving an expenditure in excess of twenty-five thousand dollars ($25,000). If the contract is in excess of this amount the contractor shall provide a payment bond to the City of Nevada City before commencement of work. Cost for the bond shall be included in the contractor bid proposal and no additional compensation will be provided.
A payment bond shall be in an amount not less than 100 percent of the total amount payable pursuant to the contract. The bond shall be in the form of a bond and not a deposit in lieu of a bond. The bond shall be executed by an admitted surety insurer.

9. Workmen's Compensation Insurance

The Contractor shall carry workmen's compensation insurance for all employees working on or about the site of the work, and if any work is subcontracted, the Contractor shall require each subcontractor to carry such insurance for all of the latter's employees, unless they are covered by the Contractor's insurance.

10. Public Liability Insurance

The Contractor shall carry public liability insurance insuring against all liability and claims for personal injury, death, and property damage incident to or arising out of the operations of the Contractor, or any subcontractor, under the contract, in the following amounts: $1,000,000.00 for personal injury or death of any one person, $1,000,000.00 for any one accident or occurrence; and $100,000.00 property damage. Such insurance shall include, as additional insureds, the City of Nevada City, its officers, agents, and employees.

11. Evidence of Insurance: Non-Cancellation Clause

The Contractor shall deliver to the City, concurrently with the execution of the contract, certificates evidencing all insurance required by the contract, and each such certificate shall include a provision to the effect that the policy or policies cannot be canceled or materially modified unless the insurer gives the City at least fifteen (15) days written notice thereof prior to such cancellation of modification.

PART B

GENERAL CONDITIONS

Article Number	Title	Page
1	Definitions	B-6
2	Preliminary Matters	B-8
3	Correlation, Interpretation and Intent of Contract Documents	B-9
4	Availability of Lands; Physical Conditions; Reference Points	B-10
5	Bonds of Insurance	B-11
6	Contractor's Responsibilities	B-14
7	Work by Others	B-21
8	Owner's Responsibilities	B-22
9	Engineer's Status During Construction	B-23
10	Changes in the Work	B-25
11	Change of the Contract Price	B-25
12	Change of the Contract Time	B-29
13	Warranty and Guarantee; Tests and Inspections; Correction, Removal or Acceptance of Defective Work	B-30
14	Payments and Completion	B-32
15	Suspension of Work and Termination	B-37
16	Arbitration	B-38
17	Miscellaneous	B-38

INDEX TO GENERAL CONDITIONS

	Article or Paragraph Number
Access to the Work	13.5
Addenda--definition of (see definition of Specifications)	1
Agreement--definition of	1
Agreement, Execution of	2.1
Application for Payment--definition of	1
Application for Payment, Final	14.12
Application for Progress Payment	14.2
Approval of Final Payment	14.13, 14.14
Approval of Payments--in general	14.4 thru 14.7.5
Arbitration	16
Availability of Lands	4.1
Award--Notice of--defined	1
Before Starting Construction	2.7 thru 2.9
Bid--definition	1
Bidder--definition	1
Bonds, Additional and Insurance	5.12
Bonds and Insurance--in general	5
Bonds--definition of	1
Bonds, Delivery of	2.2
Bonds, Performance and Payment	5.1, 5.2
Cash Allowances	11.9
Change Order--definition of	1
Changes in the Work	10
Claims, Waiver of	14.16
Clarifications and Interpretations	9.3
Cleaning	6.29
Completion, Payments and	14
Completion, Substantial	14.8, 14.9
Contract Documents--definition of	1
Contract Price, Change of	11
Contract Price--definition of	1
Contract Time, Change of	12
Contract Time--Commencement of	2.5
Contract Time--definition of	1
Contractor--definition of	1
Contractor May Stop Work or Terminate	15.5
Contractor, Neglected Work by	13.12
Contractor's Continuing Obligation	14.15
Contractor's Fee	11.6
Contractor's Liability Insurance	5.3
Contractor's Pre-Start Representations	2.4
Contractor's Responsibilities--in general	6
Contractor's Warranty of Title	14.3
Copies of Documents	2.3
Correction or Removal of Defective Work	13.9
Correction Period, One Year	13.10
Correction, Removal or Acceptance of Defective Work--in general	13
Correlation, Interpretation and Intent of Contract Documents	3
Cost of Work	11.4, 11.5
Costs, Supplemental	11.4.5
Day--definition of	1
Defective Work, Acceptance of	13.11

Defective Work, Correction or Removal of	13.9
Defective Work--definition of	9.4
Defective Work--in general	13
Defective Work, Rejecting	9.4
Definitions	1
Delivery of Bonds	2.2
Disagreements, Decisions by Engineer	9.9, 9.10
Documents, Copies of	2.3
Drawings--definition of	1
Drawings, Record	6.19
Emergencies	6.22
Engineer--definition of	1
Engineer's Responsibilities, Limitations on	9.11 thru 9.13
Engineer's Status During Construction--in general	9
Execution of Agreement	2.1
Fee, Contractor's	11.6
Field Order--definition of	1
Field Order--issued by Engineer	10.2
Final Acceptance for Payment	14.12
Final Inspection	14.11
Final Payment, Approval of	14.13, 14.14
General--Miscellaneous Provisions	17.3 thru 17.7
Giving Notice	17.1
Guarantee	13.1
Indemnification	6.30 thru 6.32
Inspection, Final	14.11
Inspection, Tests and	13.2, 13.3
Insurance--Additional Bonds and	5.12
Insurance, Bonds and--in general	5
Insurance--Certificates of	2.9 and 5
Insurance, Contractor's Liability	5.3
Insurance, OWNER's Liability	5.4
Insurance, Property	5.5 thru 5.11
Interpretations and Clarifications	9.3
Labor, Materials and Equipment	6.3 thru 6.6
Laws and Regulations	6.15
Limitations on Engineer's Responsibilities	9.11 thru 9.13
Local Conditions--Contractor's familiarity with	2.4
Materials and Equipment--furnished by Contractor	6.3
Materials or Equipment, Substitute	6.7
Miscellaneous Provisions	17
Modification--definition of	1
Neglected Work by Contractor	13.12
Notice, Giving of	17.1
Notice of Award--definition of	1
Notice to Proceed--definition of	1
Notice to Proceed--giving of	2.5
"Or-Equal" Items	6.7
OWNER--definition of	1
OWNER May Stop Work	13.8
OWNER May Suspend Work, Terminate	15.1 thru 15.4
OWNER's Liability Insurance	5.4
OWNER's Representative--Engineer to serve as	9.1

OWNER's Responsibilities--in general 8

Partial Utilization 14.10
Patent Fees and Royalties 6.13
Payments and Completion--in general 14
Payments, Approval of 14.4 thru 14.7.5
Performance, Payment and other Bonds 5.1 thru 5.2
Permits 6.14, 6.15
Physical Conditions--Surveys and Reports 4.2
Physical Conditions, Unforeseen 4.3
Preconstruction Conference 2.9
Premises, Use of 6.17, 6.18
Price--Change of Contract 11
Price--Contract--definition of 1
Progress Payment, Applications for 14.2
Progress Schedule 2.8, 14.1
Project--definition of 1
Project Representative, Resident--definition of 1
Project Representative, Resident--provision of 9.8
Project, Starting 2.6
Property Insurance 5.5 thru 5.11
Protection, Safety and 6.20 thru 6.21

Record Drawings 6.19
Reference Points 4.4
Regulations, Laws and 6.15
Rejecting Defective Work 9.4
Removal or Correction of Defective Work 13.9
Resident Project Representative--definition of 1
Resident Project Representative--provision of 9.8
Responsibilities, Contractor's 6
Responsibilities, OWNER's 8
Royalties, Patent Fees and 6.13

Safety and Protection 6.20 thru 6.21
Samples 6.23
Schedule of Shop Drawings Submissions 2.8, 14.1
Schedule of Values 14.1
Shop Drawings and Samples 6.23 thru 6.28
Shop Drawings--definition of 1
Site inspection--by Contractor 2.8
Site, Visits to--by Engineer 9.2
Specifications--definition of 1
Starting Construction, Before 2.7 thru 2.9
Stopping Work--by Contractor 15.5
Stopping Work--by OWNER 13.8
Subcontractor--definition of 1
Subcontractors--in general 6.8 thru 6.12
Substantial Completion--certification of 14.8
Substantial Completion--definition of 1
Substitute Materials or Equipment 6.7
Subsurface Conditions 4.2, 4.3
Supplemental Costs 11.4.5
Surety--consent to payment 14.12, 14.14
Surety--qualification of 5.1, 5.2
Suspending Work, by OWNER 15.1
Suspension of Work and Termination--in general 15
Superintendent--Contractor's 6.2
Supervision and Superintendence 6.1, 6.2

Taxes 6.16

Termination--by Contractor	15.5
Termination--by OWNER	15.2 thru 15.4
Termination, Suspension of Work and--in general	15
Tests and Inspections	13.2, 13.3, 13.7
Time, Change of Contract	12
Time, Computation of	17.2
Time, Contract--definition of	1
Uncovering Work	13.6, 13.7
Use of Premises	6.17, 6.18
Values, Schedule of	14.1
Visits to Site--by Engineer	9.2
Waiver of Claims	14.16
Warranty and Guarantee--by Contractor	13.1
Warranty of Title, Contractor's	14.3
Work, Access to	13.5
Work by Others--in general	7
Work, Cost of	11.4
Work--definition of	1
Work, Neglected by Contractor	13.12
Work, Stopping by Contractor	15.5
Work, Stopping by OWNER	15.1 thru 15.4

GENERAL CONDITIONS

ARTICLE 1 - DEFINITIONS

Whenever used in these General Conditions or in the other Contract Documents, the following terms have the meanings indicated which are applicable to both the singular and plural thereof:

Agreement - The written agreement between OWNER and CONTRACTOR covering the Work to be performed; other Contract Documents are attached to the Agreement.

Application for Payment - The form furnished by ENGINEER which is to be used by CONTRACTOR in requesting progress payments and which is to include the schedule of values required by paragraph 14.1 and an affidavit of CONTRACTOR that progress payments therefore received on account of the Work have been applied by CONTRACTOR to discharge in full all of CONTRACTOR's obligations reflected in prior Applications for Payment.

Bid - The offer or proposal of the Bidder submitting on the prescribed form setting forth the prices for the Work to be performed.

Bidder - Any person, firm, or corporation submitting a Bid for the Work.

Bonds - Bid, performance, and payment bonds and other instruments of security, furnished by CONTRACTOR and his surety in accordance with the Contract Documents.

Change Order - A written order to CONTRACTOR signed by OWNER authorizing an addition, deletion, or revision in the Work, or an adjustment in the Contract Price or the Contract Time issued after execution of the Agreement.

Contract Documents - The Agreement, Addenda (whether issued prior to the opening of Bid or the execution of the Agreement), Instructions to Bidders. CONTRACTOR's Bid, the Bonds, the Notice of Award, these General Conditions, the Supplementary Conditions, the Specifications, Drawings and Modifications.

Contract Price - The total moneys payable to CONTRACTOR under the Contract Documents.

Contract Time - The number of days stated in the Agreement for the completion of the Work, computed as provided in paragraph 17.2.

CONTRACTOR - The person, firm, or corporation with whom OWNER has executed the Agreement.

Day - A calendar day of twenty-four hours measured from midnight to the next midnight.

Drawings - The drawings which show the character and scope of the Work to be performed and which have been prepared or approved by ENGINEER and are referred to in the Contract Documents.

ENGINEER - The person, firm or corporation named as such in the Agreement.

Field Order - A written order issued by ENGINEER which clarifies or interprets the Contract Documents in accordance with paragraph 9.3 or orders minor changes in the Work in accordance with paragraph 10.2.

Modification - (a) A written amendment of the Contract Documents signed by both parties, (b) a Change

Order, (c) a written clarification or interpretation issued by ENGINEER in accordance with paragraph 9.3, or (d) a written order for a minor change or alteration in the Work issued by ENGINEER pursuant to paragraph 10.2. A Modification may only be issued after execution of the Agreement.

Notice of Award - The written notice by OWNER to the apparent successful Bidder stating that upon compliance with the conditions precedent to be fulfilled by him within the time specified, OWNER will execute and deliver the Agreement to him.

Notice to Proceed - A written notice given by OWNER to CONTRACTOR (with a copy to ENGINEER) fixing the date on which the Contract Time will commence to run and on which CONTRACTOR shall start to perform his obligations under the Contract Document.

OWNER - A public body or authority, corporation, association, partnership, or individual for whom the Work is to be performed.

Project - The entire construction to be performed as provided in the Contract Documents.

Resident Project Representative - The authorized representative of ENGINEER who is assigned to the Project site or any part thereof.

Shop Drawings - All drawings, diagrams, illustrations, brochures, schedules, and other data which are prepared by CONTRACTOR, a Subcontractor, manufacturer, supplier, or distributor and which illustrate the equipment, material, or some portion of the Work.

Specifications - Those portions of the Contract Documents consisting of written technical descriptions of materials, equipment, construction systems, standards, and workmanship as applied to the Work. The specifications are customarily organized in 16 divisions in accordance with the Uniform System for Construction Specifications endorsed by the Construction Specifications Institute. [*Note: the term "Technical Provisions" formerly described what is now referred to as the Specifications. For uniformity with the usage of other professional societies the term "Project Manual" is used to describe the volume formerly referred to as "The Specifications." The Project Manual contains documents concerning bidding requirements which in general govern relationships prior to the execution of the Agreement (such as the Invitation to Bid, Instructions to Bidders, and Notice of Award) and the other portions of the Contract Documents.*]

Subcontractor - An individual, firm, or corporation having a direct contract with CONTRACTOR or with any other Subcontractor for the performance of a part of the Work at the site.

Substantial Completion - The date as certified by ENGINEER when the construction of the Project or a specified part thereof is sufficiently completed, in accordance with the Contract Documents, so that the Project or specified part can be utilized for the purpose for which it was intended: or if there be no such certification, the date when final payment is due in accordance with paragraph 14.13.

Work - Any and all obligations, duties and responsibilities necessary to the successful completion of the Project assigned to or undertaken by CONTRACTOR under the Contract Documents, including all labor, materials, equipment and other incidentals, and the furnishing thereof.

ARTICLE 2 - PRELIMINARY MATTERS

Execution of Agreement:

2.1 At least three counterparts of the Agreement and such other Contract Documents as practicable will be executed and delivered by CONTRACTOR to OWNER within fifteen days of the Notice of Award: and OWNER will execute and deliver one counterpart to CONTRACTOR within ten days of receipt of the executed Agreement from CONTRACTOR. ENGINEER will identify those portions of the Contract Documents not so signed and such identification will be binding on all parties. OWNER, CONTRACTOR, and ENGINEER shall each receive an executed counterpart of the Contract Documents and additional conformed copies as required.

Delivery of Bonds:

2.2 When he delivers the executed Agreement to OWNER, CONTRACTOR shall also deliver to OWNER such Bonds as he may be required to furnish in accordance with paragraph 5.1.

Copies of Documents:

2.3 OWNER shall furnish to CONTRACTOR up to ten copies (unless otherwise provided in the Supplementary Conditions) of the Contract Documents as are reasonably necessary for the execution of the Work. Additional copies will be furnished, upon request, at the cost of reproduction.

Contractor's Pre-Start Representations:

2.4 CONTRACTOR represents that he has familiarized himself with, and assumes full responsibility for having familiarized himself with, the nature and extent of the Contract Documents, Work, locality, and with all local conditions and federal, state, and local laws, ordinances, rules, and regulations that may in any manner affect performance of the Work, and represents that he has correlated his study and observations with the requirements of the Contract Documents. CONTRACTOR also represents that he has studied all surveys and investigation reports of subsurface and latent physical conditions referred to in the General Requirements (Division 1) of the Specifications and made such additional surveys and investigations as he deems necessary for the performance of the Work at the Contract Price in accordance with the requirements of the Contract Documents and that he has correlated the results of all such data with the requirements of the Contract Documents.

Commencement of Contract Time: Notice to Proceed:

2.5 The Contact Time will commence to run on the thirtieth day after the day on which the executed Agreement is delivered by OWNER to CONTRACTOR: or if Notice to Proceed is given, on the day indicated in the Notice to Proceed; but in no event shall the Contract Time commence to run later than the ninetieth day after the day of Bid opening or the thirtieth day after the day on which OWNER delivers the executed Agreement to CONTRACTOR. A Notice to Proceed may be given at any time within thirty days after the day on which OWNER delivers the executed Agreement to CONTRACTOR.

Starting the Project:

2.6 CONTRACTOR shall start to perform his obligations under the Contract Documents on the date when the Contract Time commences to run. No Work shall be done at the site prior to the date on which the Contract Time commences to run.

Before Starting Construction:

2.7 Before undertaking each part of the Work, CONTRACTOR shall carefully study and compare the Contract Documents and check and verify pertinent figures shown thereon and all applicable field measurements. He shall at once report in writing to ENGINEER any conflict, error, or discrepancy which he may discover, however, he shall not be liable to OWNER or ENGINEER for his failure to discover any conflict, error, or discrepancy in the Drawings or Specifications.

2.8 Within ten days after delivery of the executed Agreement by OWNER to CONTRACTOR, CONTRACTOR shall submit to ENGINEER for approval, an estimated progress schedule indicating the starting and completion dates of the various stages of the Work, and a preliminary schedule of Shop Drawing submissions.

2.9 Before starting the Work at the site, CONTRACTOR shall furnish OWNER and ENGINEER certificates of insurance as required by Article 5. Within twenty days after delivery of the executed Agreement by OWNER to CONTRACTOR, but before starting the Work at the site, a conference will be held to review the above schedules to establish procedures for handling Shop Drawings and other submissions and for processing Applications for Payment, and to establish a working understanding between the parties as to the Project. Present at the conference will be OWNER or his representative, ENGINEER, Resident Project Representatives, CONTRACTOR, and his Superintendent.

ARTICLE 3 - CORRELATION, INTERPRETATION, AND INTENT OF CONTRACT DOCUMENTS

3.1 It is the intent of the Specifications and Drawings to describe a complete Project to be constructed in accordance with the Contract Documents. The Contract Documents comprise the entire Agreement between OWNER and CONTRACTOR. They may be altered only by a Modification.

3.2 The Contract Documents are complementary; what is called for by one is as binding as if called for by all. The CONTRACTOR finds a conflict, error, or discrepancy in the Contract Documents, he shall call it to ENGINEER's attention in writing at once and before proceeding with the Work affected thereby; however, he shall not be liable to OWNER or ENGINEER for his failure to discover any conflict, error, or discrepancy in the Specifications or Drawings. In resolving such conflicts, errors, or discrepancies, the documents shall be given precedence in the following order: Agreement, Modifications, Addenda, Supplementary Conditions, Specifications and Drawings. Figure dimensions on Drawings shall govern over scale dimensions, and detailed Drawings shall govern over general Drawings. Any Work that may reasonably be inferred from the Specifications or Drawings as being required to produce the intended result shall be supplied whether or not it is specifically called for. Work, materials, or equipment described in words which so applied have a well-known technical or trade meaning shall be deemed to refer to such recognized standards.

ARTICLE 4 - AVAILABILITY OF LANDS; PHYSICAL CONDITIONS; REFERENCE POINTS

Availability of Lands:

4.1 OWNER shall furnish, as indicated in the Contract Documents and not later than the date when needed by CONTRACTOR, the lands upon which the Work is to be done, rights-of-way thereto, and such other lands which are designated for the use of CONTRACTOR. Easements for permanent structures or permanent changes in existing facilities will be obtained and paid for by OWNER, unless otherwise specified in the Contract Documents. If CONTRACTOR believes that any delay in OWNER's furnishing these lands or easements entitles him to an extension of the Contract Time, he may make a claim therefore as provided in Article 12. CONTRACTOR shall provide for all additional lands and access thereto that may be required for temporary construction facilities or storage of materials and equipment.

Physical Conditions - Surveys and Reports:

4.2 Reference is made to the General Requirements (Division 1) of the Specifications for identification of those surveys and investigation reports of subsurface and latent physical conditions at the Project site or otherwise affecting performance of the Work which have been relied upon by ENGINEER in preparation of the Drawings and Specifications.

Unforeseen Physical Conditions:

4.3 CONTRACTOR shall promptly notify OWNER and ENGINEER in writing of any subsurface or latent physical conditions at the site differing materially from those indicated in the Contract Documents. ENGINEER will promptly investigate those conditions and advise OWNER in writing if further surveys or subsurface tests are necessary. Promptly thereafter, OWNER shall obtain the necessary additional surveys and tests and furnish copies to ENGINEER and CONTRACTOR. If ENGINEER finds that the results of such surveys or tests indicate that there are subsurface or latent physical conditions which differ materially from those intended in the Contract Documents, and which could not reasonably have been anticipated by CONTRACTOR, a Change Order shall be issued incorporating the necessary revisions.

Reference Points:

4.4 OWNER shall provide engineering surveys for construction to establish reference points which in his judgment are necessary to enable CONTRACTOR to proceed with the Work. CONTRACTOR shall be responsible for surveying and laying out the Work (unless otherwise provided in the Supplementary Conditions), and shall protect and preserve the established reference points and shall make no changes or relocations without the prior written approval of OWNER. He shall report to ENGINEER whenever any reference point is lost or destroyed or requires relocation because of necessary changes in grades or locations. CONTRACTOR shall replace and accurately relocate all reference points so lost, destroyed, or moved.

ARTICLE 5 - BONDS AND INSURANCE

Performance, Payment, and Other Bonds:

5.1 CONTRACTOR shall furnish performance and payment Bonds as security for the faithful performance and payment of all his obligations under the Contract Documents. These Bonds shall be in amounts at least equal to the Contract Price, and (except as otherwise provided in the Supplementary Conditions) in such form and with such sureties as are licensed to conduct business in the state where the Project is located and are named in the current list of "Surety Companies Acceptable on Federal Bonds" as published in the Federal Register by the Audit Staff Bureau of Accounts, U.S. Treasury Department.

5.2 If the surety on any Bond furnished by CONTRACTOR is declared a bankrupt or becomes insolvent or its right to do business is terminated in any state where any part of the Project is located is revoked, CONTRACTOR shall within five days thereafter substitute another Bond and surety, both of which shall be acceptable to OWNER.

Contractor's Liability Insurance:

5.3 CONTRACTOR shall purchase and maintain such insurance as will protect him from claims under workman's compensation laws, disability benefit laws, or other similar employee benefit laws; from claims for damages because of bodily injury, occupational sickness or disease, or death of his employees, and claims insured by usual personal injury liability coverage; and from claims for injury to or destruction of tangible property, including loss of use resulting therefrom – any or all of which may arise out of or result from CONTRACTOR's operations under the Contract Documents, whether such operations be by himself or by any Subcontractor or anyone directly or indirectly employed by any of them or for whose acts any of them may be legally liable. This insurance shall include the specific coverages and be written for not less than any limits of liability and maximum deductibles specified in the Supplementary Conditions or General Requirements (Division 1) or required by law, whichever is greater, shall include parties. Before starting Work, CONTRACTOR shall file with OWNER and ENGINEER certificates of such insurance, acceptable to OWNER; these certificates shall contain a provision that the coverage afforded under the policies will not be cancelled or materially changed until at least fifteen days prior written notice has been given to OWNER and ENGINEER.

Any deductibles or self-insured retentions must be declared to and approved by the OWNER. At the option of the OWNER, either: the insurer shall reduce or eliminate such deductibles or self-insured retentions as respects the OWNER, its officers, officials, employees and volunteers; or the CONTRACTOR shall provide a financial guarantee satisfactory to the OWNER guaranteeing payment of losses and related investigations, claim administration and defense expenses.

The general liability and automobile liability policies are to contain, or be endorsed to contain, the following provisions:

1. The ENGINEER and the OWNER, its officers, officials, employees, and volunteers are to be covered as insureds with respect to liablity arising out of automobiles owned, leased, hired or borrowed by or on behalf of the CONTRACTOR; and with respect to liability arising out of work or operations performed by or on behalf of the CONTRACTOR including materials, parts or equipment furnished in connection with such work or operations. General liability coverage can be provided in the form of an endorsement to the CONTRACTOR's insurance.

2. For any claims related to this project, the CONTRACTOR's insurance coverage shall be primary insurance

as respects the ENGINEER and the OWNER, its officers, officials, employees, and volunteers. Any insurance or self-insurance maintained by the ENGINEER and the OWNER, its officers, officials, employees, or volunteers shall be excess of the CONTRACTOR's insurance and shall not contribute with it.

3. Each insurance policy required by this clause shall be endorsed to state that coverage shall be cancelled by either party, except after fifteen (15) days prior written notice by certified mail, return receipt requested, has been given to the OWNER and the ENGINEER.

4. Coverage shall not extend to any indemnity coverage for the active negligence of the additional insured in any case where an agreement to indemnify the additional insured would be invalid under *Subdivision (b) of Section 2782 of the Civil Code*.

Insurance is to be placed with a current A.M. Best's rating of no less than A:VII.

CONTRACTOR shall furnish the OWNER with original certificates and amendatory endorsements effecting coverage required by this clause. The endorsements should be on forms provided by the OWNER or on other than the OWNER's forms, provided those endorsements or policies conform to the requirements. All certificates and endorsements are to be received and approved by the OWNER before work commences. The OWNER reserved the right to require complete, certified copies of all required insurance policies, including endorsements effecting the coverage required by these specifications at any time.

CONTRACTOR shall include all Subcontractors as insureds under its policies or shall furnish separate certificates and endorsements for each Subcontractor. All coverages for Subcontractors shall be subject to all of the requirements stated herein.

OWNER's Liability Insurance:

5.4 OWNER shall be responsible for purchasing and maintaining his own liability insurance and, at his option, may purchase and maintain such insurance as will protect him against claims which may arise from operations under the Contract Documents.

Property Insurance:

5.5 Unless otherwise provided, OWNER shall purchase and maintain property insurance upon the Project to the full insurable value hereof. This insurance shall include the interests of OWNER, CONTRACTOR, and Subcontractors in the Work, shall insure against the perils of Fire, Extended Coverage, Vandalism, and Malicious Mischief, and such other perils as may be specified in the Supplementary Conditions or General Requirements (Division 1), and shall include damages, losses, and expenses arising out of or resulting from any insured loss or incurred in the repair or replacement of any insured property (including fees and charges of engineers, architects, attorneys, and other professionals).

5.6 OWNER shall purchase and maintain such steam boiler and machinery insurance as may be required by the Supplementary Conditions or by law. This insurance shall include the interests of OWNER, CONTRACTOR, and Subcontractors in the Work.

5.7 Any insured loss under the policies of insurance required by paragraphs 5.5 and 5.6 is to be adjusted with OWNER and made payable to OWNER as trustee for the insureds, as their interests may appear, subject to the requirements of any applicable mortgage clause and of paragraph 5.11.

5.8 OWNER shall file a copy of all policies with CONTRACTOR before an exposure to loss may

occur. If OWNER does not intend to purchase such insurance, he shall inform CONTRACTOR in writing prior to commencement of the Work. CONTRACTOR may then effect insurance which will protect the interests of himself and his Subcontractors in the Work, and by appropriate Change Order the cost thereof shall be charged to OWNER. If CONTRACTOR is damaged by failure of OWNER to purchase or maintain such insurance and so to notify CONTRACTOR, then OWNER shall bear reasonable costs properly attributable thereto.

5.9 If CONTRACTOR requests in writing that other special insurance be included in the property insurance policy, OWNER shall, if possible, include such insurance and the cost thereof shall be charged to CONTRACTOR by appropriate Change Order.

5.10 OWNER and CONTRACTOR waive all rights against each other for damages caused by fire or other perils to the extent covered by insurance provided under paragraphs 5.5 through 5.11, inclusive, except such rights as they may have to the proceeds of such insurance held by OWNER as trustee. CONTRACTOR shall require similar waivers by Subcontractors in accordance with paragraph 6.12.

5.11 OWNER as trustee shall have power to adjust and settle any loss with the insurers unless one of the parties in interest shall object in writing within five days after the occurrence of loss to OWNER's exercise of this power, and if such objection be made, arbitrators shall be chosen as provided in Article 16. OWNER as trustee shall, in that case, make settlement with the insurers in accordance with the directions of such arbitrators. If distribution of the insurance proceeds by arbitration is required, the arbitrators will direct such distribution.

Additional Bonds and Insurance:

5.12 Prior to delivery of the executed Agreement by OWNER to CONTRACTOR, OWNER may require CONTRACTOR to furnish such other Bonds and such additional insurance, in such form and with such sureties or insurers as OWNER may require. If such other Bonds or such other insurance are specified by written instructions given prior to opening of Bids, the premiums shall be paid by CONTRACTOR; if subsequent thereto, they shall be paid by OWNER (except as otherwise provided in paragraph 6.7).

ARTICLE 6 - CONTRACTOR'S RESPONSIBILITIES

Supervision and Superintendence:

6.1 CONTRACTOR shall supervise and direct the Work efficiently and with his best skill and attention. He shall be solely responsible for the means, methods, techniques, sequences, and procedures of construction, but he shall not be solely responsible for the negligence of others in the design or selection of a specific means, method, technique, sequence, or procedure of construction which is indicated in and required by the Contract Documents. CONTRACTOR shall be responsible to see that the finished Work complies accurately with the Contract Documents.

6.2 CONTRACTOR shall keep on the Work at all times during its progress a competent resident superintendent, who shall not be replaced without written notice to OWNER and ENGINEER except under extraordinary circumstances. The superintendent will be CONTRACTOR's representative at the site and shall have authority to act on behalf of CONTRACTOR. All communications given to the superintendent shall be as binding as if given to CONTRACTOR.

Labor, Materials, and Equipment:

6.3 CONTRACTOR shall provide competent, suitably qualified personnel to survey and lay out the Work and perform personnel to survey and lay out the Work and perform construction as required by the Contact Documents. He shall at all times maintain good discipline and order at the site.

6.4 CONTRACTOR shall furnish all materials, equipment, labor, transportation, construction equipment, and machinery, tools, appliances, fuel, power, light, heat, telephone, water, and sanitary facilities and all other facilities and incidentals necessary for the execution, testing, initial operation, and completion of the Work.

6.5 All materials and equipment shall be new, except as otherwise provided in the Contract Documents. If required by ENGINEER, CONTRACTOR shall furnish satisfactory evidence as to the kind and quality of materials and equipment.

6.6 All materials and equipment shall be applied, installed, connected, erected, used, cleaned, and conditioned in accordance with the instructions of the applicable manufacturer, fabricator, or processors, except as otherwise provided in the Contract Documents.

Substitute Materials or Equipment:

7.1 If the General Requirements (Division 1 of the Specifications), law, ordinance, or applicable rules or regulations permit CONTRACTOR to furnish or use a substitute that is equal to any material or equipment specified, and if CONTRACTOR wishes to furnish or use a proposed substitute, he shall, prior to the conference called for by paragraph 2.9 (unless another time is provided in the General Requirements), make written application to ENGINEER for approval of such substitute certifying in writing that the proposed substitute will perform adequately the functions called for by the general design, be similar and of equal substance to that specified and be suited to the same use and capable of performing the same function as that specified; stating whether or not its incorporation in or use in connection with the Project is subject to the payment of any license fee or royalty; and identifying all variations of the proposed substitute from that specified and indicating available maintenance service. No substitute shall be ordered or installed without the written approval of ENGINEER who will be the judge of equality and may require CONTRACTOR to furnish such other data about the proposed substitute as he considers pertinent. No substitute shall be ordered

or installed without such performance guarantee and bonds as OWNER may require which shall be furnished at CONTRACTOR's expense.

Concerning Subcontractors:

6.8 CONTRACTOR shall not employ any Subcontractor or other person or organization (including those who are to furnish the principal items of materials or equipment), whether initially or as a substitute, against whom OWNER or ENGINEER may have reasonable objection. A Subcontractor or other person or organization identified in writing to OWNER and ENGINEER by CONTRACTOR prior to the Notice of Award and not objected to in writing by OWNER or ENGINEER prior to the Notice of Award will be deemed acceptable to OWNER and ENGINEER. Acceptance of any Subcontractor, other person or organization by OWNER or ENGINEER shall not constitute a waiver of any right of OWNER or ENGINEER to reject defective Work or Work not in conformance with the Contract Documents. If OWNER or ENGINEER after due investigation has reasonable objection to any Subcontractor, other person or organization proposed by CONTRACTOR after the Notice of Award. CONTRACTOR shall submit an acceptable substitute and the Contract Price shall be increased or decreased by the difference in cost occasioned by such substitution, and an appropriate Change Order shall be issued. CONTRACTOR shall not be required to employ any Subcontractor, other person or organization against whom he has reasonable objection. CONTRACTOR shall not without the consent of OWNER and ENGINEER make any substitution for any Contractor, other person or organization who has been accepted by OWNER and ENGINEER unless ENGINEER determines that there is good cause for doing so.

6.9 CONTRACTOR shall be fully responsible for all acts and omissions of his Subcontractors and of persons and organizations directly or indirectly employed by them and of persons and organizations for whose acts any of them may be liable to the same extent that he is responsible for the acts and omissions of persons directly employed by him. Nothing in the Contract Documents shall create any contractual relationship between OWNER or ENGINEER and any Subcontractor or other person or organization having a direct contract with CONTRACTOR, nor shall it create any obligation on the part of OWNER or ENGINEER or pay or to see to the payment of any moneys due any Subcontractor or other person or organization, except as may otherwise be required by law. OWNER or ENGINEER may furnish to any Subcontractor or other person or organization, to the extent practicable, evidence of amounts paid to CONTRACTOR on account of specific Work done in accordance with the schedule of values.

6.10 The divisions and sections of the Specifications and the identifications of any Drawings shall not control CONTRACTOR in dividing the Work among Subcontractors or delineating the Work to be performed by any specific trade.

6.11 CONTRACTOR agrees to bind specifically every Subcontractor to the applicable terms and conditions of the Contract Documents for the benefit of OWNER.

6.12 All Work performed for CONTRACTOR by a Subcontractor shall be pursuant to an appropriate agreement between CONTRACTOR and the Subcontractor which shall contain provisions that waive all rights the contracting parties may have against one another for damages caused by fire or other perils covered by insurance provided in accordance with paragraphs 5.5 through 5.11, inclusive, except such rights as they may have to the proceeds of such insurance held by OWNER as trustee under paragraph 5.9. CONTRACTOR shall pay each Subcontractor a just share of any insurance moneys received by CONTRACTOR under paragraph 5.5 through 5.11, inclusive.

Patent Fees and Royalties:

6.13 CONTRACTOR shall pay all license fees and royalties and assume all costs incident to the use in

the performance of the Work of an invention, design, process, product, or device which is the subject of patent rights or copyrights held by others. If a particular invention, design, process, product, or device is specified in the Contract Documents for use in the performance of the Work and if to the actual knowledge of OWNER or ENGINEER its use is subject to patent rights or copyrights calling for the payment of any license fee or royalty to others, the existence of such rights shall be disclosed by OWNER in the Contract Documents. CONTRACTOR shall indemnify and hold harmless OWNER and ENGINEER and anyone directly or indirectly employed by either of them from and against all claims, damages, losses, and expenses (including attorneys' fees) arising out of any infringement of patent rights or copyrights incident to the use in the performance of the Work or resulting from the incorporation in the Work of any invention, design, process, product, or device not specified in the Contract Documents, and shall defend all such claims in connection with any alleged infringement of such rights.

Permits:

6.14 CONTRACTOR shall obtain and pay for all construction permits and licenses and shall pay all governmental charges and inspection fees necessary for the prosecution of the Work, which are applicable at the time of his Bid. OWNER shall assist CONTRACTOR, when necessary, in obtaining such permits and licenses. CONTRACTOR shall also pay all public utility charges.

Laws and Regulations:

6.15 CONTRACTOR shall give all notices and comply with all laws, ordinances, rules, and regulations applicable to the Work. If CONTRACTOR observes that the Specifications and Drawings are at variance therewith, he shall give ENGINEER prompt written notice thereof, and any necessary changes shall be adjusted by an appropriate Modification. If CONTRACTOR performs any Work knowing it to be contrary to such laws, ordinances, rules, and regulations, and without such notice to ENGINEER, he shall bear all costs arising therefrom; however, it shall not be his primary responsibility to make certain that the Specifications and Drawings are in accordance with such laws, ordinances, rules, and regulations.

Taxes:

6.16 CONTRACTOR shall pay all sales, consumer, use, and other similar taxes required to be paid by him in accordance with the law of the place where the Work is to be performed.

Use of Premises:

6.17 CONTRACTOR shall confine his equipment, the storage of materials and equipment, and the operations of his workmen to areas permitted by law, ordinances, permits, or the requirements of the Contract Documents, and shall not unreasonably encumber the premises with materials or equipment.

6.18 CONTRACTOR shall not load nor permit any part of any structure to be loaded with weights that will endanger the structure, nor shall he subject any part of the Work to stresses or pressures that will endanger it.

Record Drawings:

6.19 CONTRACTOR shall keep one record copy of all Specifications, Drawings, Addenda, Modifications, and Shop Drawings at the site in good order and annotated to show changes made during the construction process. These shall be available to ENGINEER and shall be delivered to him for OWNER upon completion of the Project. [*Note: Further provisions in respect of such record drawings may be included in the General Requirements (Division 1).*]

Safety and Protection:

6.20 CONTRACTOR shall be responsible for initiating, maintaining, and supervising all safety precautions and programs in connection with the Work. He shall take all necessary precautions for the safety of, and shall provide the necessary protection to prevent damage, injury, or loss to:

6.20.1 all employees on the Work and other persons who may be affected thereby,

6.20.2 all the Work and all materials or equipment to be incorporated therein, whether in storage on or off the site and

6.20.3 other property at the site or adjacent thereto, including trees, shrubs, lawns, walks, pavements, roadways, structures, and utilities not designated for removal, relocation, or replacement in the course of construction.

CONTRACTOR shall comply with all applicable laws, ordinances, rules, regulations, and orders of any public body having jurisdiction for the safety of persons or property or to protect them from damage, injury, or loss. He shall erect and maintain, as required by the conditions and progress of the Work, all necessary safeguards for its safety and protection. He shall notify OWNERs of adjacent utilities when prosecution of the Work may affect them. All damage, injury, or loss to any property referred to in paragraph 6.20.2 or 6.20.3 caused, directly or indirectly, in whole or in part, by CONTRACTOR, any Subcontractor or anyone directly or indirectly employed by any of them or anyone for whose acts any of them may be liable, shall be remedied by CONTRACTOR: except damage or loss attributable to the fault of Drawings or Specifications or to the acts or omissions of OWNER or ENGINEER or anyone employed by either of them or anyone for whose acts either of them may be liable, and not attributable, directly or indirectly, in whole or in part, to the fault or negligence of CONTRACTOR. CONTRACTOR's duties and responsibilities for the safety and protection of the Work shall continue until such time as all the Work is completed and ENGINEER has issued a notice to OWNER and CONTRACTOR in accordance with paragraph 14.13 that Work is acceptable

6.21 CONTRACTOR shall designate a responsible member of his organization at the site whose duty shall be the prevention of accidents. This person shall be CONTRACTOR's superintendent unless otherwise designated in writing by CONTRACTOR to OWNER.

Emergencies:

6.22 In emergencies affecting the safety of persons or the Work or property at the site or adjacent thereto, CONTRACTOR, without special instruction or authorization from ENGINEER or OWNER, is obligated to act, at his discretion, to prevent threatened damage, injury, or loss. He shall give ENGINEER prompt written notice of any significant changes in the Work or deviations from the Contract Documents caused thereby, and a Change Order shall thereupon be issued covering the changes and deviations involved. If CONTRACTOR believes that additional work done by him in any emergency which arose from causes beyond his control entitles him to an increase in the Contract Price or an extension of the Contract Time, he may make a claim therefore as provided in Articles 11 and 12.

Shop Drawings and Samples:

6.23 After checking and verifying all field measurements. CONTRACTOR shall submit to ENGINEER for approval, in accordance with the accepted schedule of Shop Drawing submissions (see paragraph 2.8) five copies (or at ENGINEER's option, one reproducible copy) of all Shop Drawings, which shall have been checked by and stamped with the approval of CONTRACTOR and identified as ENGINEER may require. The data shown on the Shop Drawings will be complete with respect to dimensions, design criteria, materials of construction, and the like to enable ENGINEER to review the information as required.

6.24 CONTRACTOR shall also submit to ENGINEER for approval with such promptness as to cause no delay in Work, all samples required by the Contract Documents. All samples will have been checked by and stamped with the approval of CONTRACTOR, identified clearly as to material, manufacturer, any pertinent catalog numbers and the use for which intended.

6.25 At the time of submission, CONTRACTOR shall in writing call ENGINEER's attention to any deviations that the Shop Drawing or sample may have from the requirements of the Contract Documents.

6.26 ENGINEER will review and approve with reasonable promptness Shop Drawings and samples, but his review and approval shall be only for conformance with the design concept of the Project and for compliance with the information given in the Contract Documents. The approval of a separate item as such will not indicate approval of the assembly in which the item functions. CONTRACTOR shall make any corrections required by ENGINEER and shall return the required number of corrected copies of Shop Drawings and resubmit new samples until approved. CONTRACTOR shall direct specific attention in writing or on resubmitted Shop Drawings to revisions other than the corrections called for by ENGINEER on previous submissions. CONTRACTOR's stamp of approval on any Shop Drawing or sample shall constitute a representation to OWNER and ENGINEER that CONTRACTOR has either determined and verified all quantities, dimensions, field construction criteria, materials, catalog numbers, and similar data or he assumes full responsibility for doing so, and that he has reviewed or coordinated each Shop Drawing or sample with the requirements of the Work and the Contract Documents.

6.27 Where a Shop Drawing or sample submission is required by the Specifications, no related Work shall be commenced until the submission has been approved by ENGINEER. A copy of each approved Shop Drawing and each approved sample shall be kept in good order by CONTRACTOR at the site and shall be available to ENGINEER.

6.28 ENGINEER's approval of Shop Drawings or samples shall not relieve CONTRACTOR from his responsibility for any deviations from the requirements of the Contract Documents unless CONTRACTOR has in writing called ENGINEER's attention to such deviation at the time of submission and ENGINEER has given written approval to the specific deviation, nor shall any approval by ENGINEER relieve CONTRACTOR from responsibility for errors or omissions in the Shop Drawings.

[*Note: Further provisions in respect to Shop Drawings and samples may be included in the General Requirements (Division 1).]*

Cleaning:

6.29 CONTRACTOR shall keep the premises free from accumulations of waste materials, rubbish, and other debris resulting from the Work, and at the completion of the Work he shall remove all waste materials, rubbish, and debris from and about the premises as well as all tools, construction equipment and machinery, and surplus materials, and shall leave the site clean and ready for occupancy by OWNER. CONTRACTOR shall restore to their original condition those portions of the site not designated for alteration by the Contract Documents. [*Note: Further provisions in respect to cleaning may be included in the General Requirements (Division 1).]*

Indemnification:

6.30 CONTRACTOR shall indemnify and hold harmless OWNER and ENGINEER and their agents and employees from and against all claims, damages, losses, and expenses including attorneys' fees arising out of or resulting from the performance of the Work, provided that any such claim, damage, loss, or expense (a) is attributable to bodily injury, sickness, disease or death, or to injury to or destruction of tangible property (other than the Work itself) including the loss of use resulting therefrom and (b) is caused in whole or in part by any negligent act or omission of CONTRACTOR, any Subcontractor, anyone directly or indirectly employed by any of them or anyone for whose acts any of them may be liable, regardless of whether or not it is caused in part by a party indemnified hereunder.

6.31 In any and all claims against OWNER or ENGINEER or any of their agents or employees by an employee of CONTRACTOR, any Subcontractor, anyone directly or indirectly employed by any of them or anyone for whose acts any of them may be liable, the indemnification obligation under paragraph 6.30 shall not be limited in any way by any limitation on the amount or type of damages, compensation, or benefits payable by or for CONTRACTOR or any Subcontractor under workmen's compensation acts, disability benefit acts or other employee benefit acts.

6.32 The obligations of CONTRACTOR under paragraph 6.30 shall not extend to the liability of ENGINEER, his agents, or employees arising out of (a) the preparation or approval of maps, drawings, opinions, reports, surveys, Change Orders, designs or specifications or (b) the giving of or the failure to give directions or instructions by ENGINEER, his agents, or employees provided such giving or failure to give is the primary cause of injury or damage.

ARTICLE 7 - WORK BY OTHERS

7.1 OWNER may perform additional work related to the Project by himself, or he may let other direct contracts therefore which shall contain General Conditions similar to these. CONTRACTOR shall afford the other CONTRACTOR'S who are parties to such direct contracts (or OWNER, if he is performing the additional work himself), reasonable opportunity for the introduction and storage of materials and equipment and the execution of work, and shall properly connect and coordinate his Work with theirs.

7.2 If any part of CONTRACTOR's Work depends for proper execution or results upon the work of any such other contractor (or OWNER), CONTRACTOR shall inspect and promptly report to ENGINEER in writing any defects or deficiencies in such work that render it unsuitable for such proper execution and results. His failure so to report shall constitute an acceptance of the other work as fit and proper for the relationship of his Work except as to defects and deficiencies which may appear in the other work after the execution of his Work.

7.3 CONTRACTOR shall do all cutting, fitting, and patching of his Work that may be required to make its several parts come together properly and fit it to receive or be received by such other work. CONTRACTOR shall not endanger any work by others by cutting, excavating, or otherwise altering their work and will only cut or alter their work with the written consent of ENGINEER and of the other CONTRACTOR'S whose work will be affected.

7.4 If the performance of additional work by other CONTRACTOR'S or OWNER is not noted in the Contract Documents prior to the execution of the contract, written notice thereof shall be given to CONTRACTOR prior to starting any such additional work. If CONTRACTOR believes that the performance of such additional work by OWNER or others involves him in additional expenses or entitles him to an extension of the Contract Time, he may make a claim therefore as provided in Articles 11 and 12.

ARTICLE 8 - OWNER'S RESPONSIBILITIES

8.1 OWNER shall issue all communications to CONTRACTOR through ENGINEER.

8.2 In case of termination of the employment of ENGINEER, OWNER shall appoint an engineer against whom CONTRACTOR makes no reasonable objections, whose status under the Contract Documents shall be that of the former ENGINEER. Any dispute in connection with such appointment shall be subject to arbitration.

8.3 OWNER shall furnish the data required of him under the Contract Documents promptly and shall make payments to CONTRACTOR promptly after they are due as provided in paragraph 14.4 and 14.13.

8.4 OWNER's duties in respect to providing lands and easements and providing engineering surveys to establish reference points are set forth in paragraphs 4.1 and 4.4. Paragraph 4.2 refers to OWNER's identifying and making available to CONTRACTOR copies of surveys and investigation reports of subsurface and latent physical conditions at the site or otherwise affecting performance of the Work which have been relied upon by ENGINEER in preparing the Drawings and Specifications.

8.5 OWNER's responsibilities in respect of liability and property insurance are set forth in paragraph 5.4 and 5.5.

8.6 In addition to his rights to request changes in the Work in accordance with Article 10, OWNER (especially in certain instances as provided in paragraph 10.4) shall be obligated to execute Change Orders.

8.7 OWNER's responsibility in respect of certain inspections, tests, and approvals is set forth in paragraph 13.2.

8.8 In connection with OWNER's right to stop Work or suspend Work, see paragraphs 13.8 and 15.1. Paragraph 15.2 deals with the OWNER's right to terminate services of CONTRACTOR under certain circumstances.

ARTICLE 9 - ENGINEER'S STATUS DURING CONSTRUCTION

OWNER's Representative:

9.1 ENGINEER will be OWNER's representative during the construction period. The duties and responsibilities and the limitations of authority of ENGINEER as OWNER's representative during construction are set forth in Articles 1 through 17 of these General Conditions and shall not be extended without written consent of OWNER and ENGINEER.

Visits to Site:

9.2 ENGINEER will make periodic visits to the site to observe the progress and quality of the executed Work and to determine, in general, if the Work is proceeding in accordance with the Contract Documents. He will not be required to make exhaustive or continuous on-site inspections to check the quality or quantity of the Work. His efforts will be directed toward providing assurance for OWNER that the completed Project will conform to the requirements of the Contract Documents. On the basis of his on-site observations as an experienced and qualified design professional, he will keep OWNER informed of the progress of the Work and will endeavor to guard OWNER against defects and deficiencies in the Work of CONTRACTOR'S.

Clarifications and Interpretations:

9.3 ENGINEER will issue with reasonable promptness such written clarifications or interpretations of the Contract Documents (in the form of Drawings or otherwise) as he may determine necessary, which shall be consistent with or reasonably inferable from the overall intent of the Contract Documents. If CONTRACTOR believes that a written clarification or interpretation entitles him to an increase in the Contract Price, he may make a claim therefore as provided in Article 11.

Rejecting Defective Work:

9.4 ENGINEER will have authority to disapprove or reject Work which is "defective" (which term is hereinafter used to describe Work that is unsatisfactory, faulty, or defective, or does not conform to the requirements of the Contract Documents or does not meet the requirements of any inspection, test or approval referred to in paragraph 13.2 or has been damaged prior to approval of final payment). He will also have authority to require special inspection or testing of the Work as provided in paragraph 13.7, whether or not the Work is fabricated, installed, or completed.

Shop Drawings, Change Orders and Payments:

9.5 In connection with ENGINEER's responsibility for Shop Drawings and samples, see paragraphs 6.23 through 6.28 inclusive.

9.6 In connection with ENGINEER's responsibility for Change Orders, see Articles 10, 11, and 12.

9.7 In connection with ENGINEER's responsibilities in respect of Applications for Payment, etc., see Article 14.

Resident Project Representative:

9.8 If OWNER and ENGINEER agree, ENGINEER will furnish a Resident Project Representative and assistants to assist ENGINEER in carrying out his responsibilities at the site. The duties, responsibilities, and limitations of authority of any such Resident Project Representative and assistants shall be as set forth in an exhibit to be incorporated in the Contract Documents.

Decisions on Disagreements:

9.9 ENGINEER will be the interpreter of the requirements of the Contract Documents and the judge of the performance thereunder. In his capacity as interpreter and judge he will exercise his best efforts to insure faithful performance by both OWNER and CONTRACTOR. He will not show partiality to either and will not be liable for the result of any interpretation or decision rendered in good faith. Claims, disputes, and other matters relating to the execution of or performance under the Contract Documents shall be referred to ENGINEER for decision; which he will render in writing within a reasonable time.

9.10 Either OWNER or CONTRACTOR may demand arbitration with respect to any such claim, dispute or other matter that has been referred to ENGINEER, except any which have been waived by the making or acceptance of final payment as provided in paragraph 14.16, such arbitration to be in accordance with Article 14.16, such arbitration to be in accordance with Article 16. However, no demand for arbitration of any such claim, dispute, or other matter shall be made until the earlier of (a) the date on which ENGINEER has rendered his decision or (b) the tenth day after the parties have presented their evidence to ENGINEER if he has not rendered his written decision before that date. No demand for arbitration shall be made later than thirty days after the date on which ENGINEER rendered his written decision in respect to the claim, dispute, or other matter as to which arbitration is sought; and the failure to demand arbitration within said thirty days' period shall result in ENGINEER's decision being final and binding upon OWNER and CONTRACTOR. If ENGINEER renders a decision after arbitration proceedings have been initiated, such decision may be entered as evidence but shall not supersede the arbitration proceedings, except where the decision is acceptable to the parties concerned.

Limitations on ENGINEER's Responsibilities:

9.11 Neither ENGINEER's authority to act under this Article 9 or elsewhere in the Contract Documents nor any decision made by him in good faith either to exercise or not exercise such authority shall give rise to any duty or responsibility of ENGINEER to CONTRACTOR, any Subcontractor, any materialman, fabricator, supplier, or any of their agents or employees any other person performing any of the Work.

9.12 ENGINEER will not be responsible for CONTRACTOR's means, methods, techniques, sequences or procedures of construction, or the safety precautions and programs incident thereto, and he will not be responsible for CONTRACTOR's failure to perform the Work in accordance with the Contract Documents.

9.13 ENGINEER will not be responsible for the acts or omissions of CONTRACTOR, or any Subcontractors, or any of his or their agents or employees, or any other persons at the site or otherwise performing any of the Work.

ARTICLE 10 - CHANGES IN THE WORK

10.1 Without invalidating the Agreement, OWNER may, at any time or from time to time, other additions, deletions, or revisions in the Work; these will be authorized by Change Orders. Upon receipt of a Change Order, CONTRACTOR shall proceed with the Work involved. All such Work shall be executed under the applicable conditions of the Contract Documents. If any Change Order causes an increase or decrease in the Contract Price or an extension or shortening of the Contract Time, an equitable adjustment will be made as provided in Article 11 or Article 12 on the basis of a claim made by either party.

10.2 ENGINEER may authorize minor changes or alterations in the Work not involving extra cost and not inconsistent with the overall intent of the Contract Documents. These may be accomplished by a Field Order. If CONTRACTOR believes that any minor change or alteration authorized by ENGINEER entitles him to an increase in the Contract Price, he may make a claim therefore as provided in Article 11.

10.3 Additional Work performed by CONTRACTOR without authorization of a Change Order will not entitle him to an increase in the Contract Price or an extension of the Contract Time, except in the case of an emergency as provided in paragraph 6.22 and except as provided in paragraphs 10.2 and 13.7.

10.4 OWNER shall execute appropriate Change Orders prepared by ENGINEER covering changes in the Work to be performed as provided in paragraph 4.3, and Work performed in an emergency as provided in paragraph 6.22 and any other claim of CONTRACTOR for a change in the Contract Time or the Contract Price which is approved by ENGINEER.

10.5 It is CONTRACTOR's responsibility to notify his Surety of any changes affecting the general scope of the Work or change in the Contract Price and the amount of the applicable Bonds shall be adjusted accordingly. CONTRACTOR shall furnish proof of such adjustment to OWNER.

ARTICLE 11 - CHANGE OF THE CONTRACT PRICE

11.1 The Contract Price constitutes the total compensation payable to CONTRACTOR for performing the Work. All duties, responsibilities, and obligations assigned to or undertaken by CONTRACTOR shall be at his expense without change in the Contract Price.

11.2 The Contract Price may only be changed by a Change Order. Any claim for an increase in the Contract Price shall be based on written notice delivered to OWNER and ENGINEER within fifteen days of the occurrence of the event giving rise to the claim. Notice of the amount of the claim with supporting data shall be delivered within forty-five days of such occurrence unless ENGINEER allows an additional period of time to ascertain accurate cost data. All claims for adjustments in the Contract Price shall be determined by ENGINEER if OWNER and CONTRACTOR cannot otherwise agree on the amount involved. Any change in the Contract Price resulting from any such claim shall be incorporated in a Change Order.

11.3 The value of any Work covered by a Change Order or of any claim for an increase or decrease in the Contract Price shall be determined in one of the following ways:

11.3.1 Where the Work involved is covered by unit prices contained in the Contract Documents, by application of unit prices to the quantities of the items involved.

11.3.2 By mutual acceptance of a lump sum.

11.3.3 On the basis of the Cost of the Work (determined as provided in paragraphs 11.4 and 11.5) plus a Contractor's Fee for overhead and profit (determined as provided in paragraph 11.6).

Cost of the Work:

11.4 The term Cost of the Work means the sum of all costs necessarily incurred and paid by the CONTRACTOR in the proper performance of the Work. Except as otherwise may be agreed to in writing by OWNER, such costs shall be in amounts no higher than those prevailing in the locality of the Project, shall include only the following items and shall not include any of the costs itemized in paragraph 11.5:

11.4.1 Payroll costs for employees in the direct employ of CONTRACTOR in the performance of the Work under schedules of job classifications agreed upon by OWNER and CONTRACTOR. Payroll costs for employees not employed full time on the Work shall be apportioned on the basis of their time spent on the Work. Payroll costs shall include, but not be limited to, salaries and wages plus the cost of fringe benefits which shall include social security contributions, unemployment, excise and payroll taxes, workmen's compensation, health and retirement benefits, bonuses, sick leave, vacation and holiday pay applicable thereto. Such employees shall include superintendents and foreman at the site. The expenses of performing work after regular working hours on Sunday or legal holidays shall be included in the above to the extent authorized by OWNER.

11.4.2 Cost of all materials and equipment furnished and incorporated in the Work, including costs of transportation and storage thereof, and manufacturers' field services required in connection therewith. All cash discounts shall accrue to CONTRACTOR unless OWNER deposits funds with CONTRACTOR with which to make payments, in which case the cash discounts shall accrue to OWNER. All trade discounts, rebates and refunds, and all returns from sale of surplus materials and equipment shall accrue to OWNER, and CONTRACTOR shall make provisions so that they may be obtained.

11.4.3 Payments made by CONTRACTOR to the Subcontractors for Work performed by Subcontractors. If required by OWNER, CONTRACTOR shall obtain competitive bids from Subcontractors acceptable to him and shall deliver such bids to OWNER who will then determine with the advice of ENGINEER, which bids will be accepted. If a subcontract provides that the Subcontractor is to be paid on the basis of Cost of the Work Plus a Fee, the Cost of the Work shall be determined in accordance with paragraphs 11.4 and 11.5. All subcontracts shall be subject to the other provisions of the Contract Documents insofar as applicable.

11.4.4 Costs of special consultants (including, but not limited to, engineers, architects, testing laboratories, surveyors, lawyers, and accountants) employed for services specifically related to the Work.

11.4.5 Supplemental costs including the following:

11.4.5.1 The proportion of necessary transportation, traveling, and subsistence expenses of CONTRACTOR's employees incurred in discharge of duties connected with the Work.

11.4.5.2 Cost, including transportation and maintenance, of all materials, supplies, equipment, machinery, appliances, office and temporary facilities at the site and hand tools not owned by the workmen, which are consumed in the performance of the Work, and cost less market value of such items used but not consumed which remain the property of CONTRACTOR.

11.4.5.3 Rentals of all construction equipment and machinery and the parts thereof whether rented from CONTRACTOR or others in accordance with rental agreements approved by OWNER with the advice of ENGINEER, and the costs of transportation, loading, unloading, installation, dismantling and removal thereof--all in accordance with terms of said rental agreements. The rental of any such equipment, machinery or parts shall cease when the use thereof is no longer necessary for the Work.

11.4.5.4 Sales, use or similar taxes related to the Work, and for which CONTRACTOR is liable, imposed by any governmental authority.

11.4.5.5 Deposits lost for causes other than CONTRACTOR's negligence, royalty payments and fees for permits and licenses.

11.4.5.6 Losses, damages and expenses, not compensated by insurance or otherwise, sustained by CONTRACTOR in connection with the execution of, and to, the Work, provided they have resulted from causes other than the negligence of CONTRACTOR, any Subcontractor, or anyone directly or indirectly employed by any of them for whose acts any of them may be liable. Such losses shall include settlements made with the written consent and approval of OWNER. No such losses, damages and expenses shall be included in the Cost of the Work for the purpose of determining Contractor's Fee. If, however, any such loss or damage requires reconstruction and CONTRACTOR is placed in charge thereof, he shall be paid for his services a fee proportionate to that stated in paragraph 11.6.2.

11.4.5.7 The cost of utilities, fuel and sanitary facilities at the site.

11.4.5.8 Minor expenses such as telegrams, long distance telephone calls, telephone service at the site, expressage and similar petty cash items in connection with the Work.

11.4.5.9 Cost of premiums for bonds and insurance which OWNER is required to pay in accordance with paragraph 5.12.

11.5 The term Cost of the Work shall not include any of the following:

11.5.1 Payroll costs and other compensation of CONTRACTOR's officers, executives, principals (of partnership and sole proprietorships), general managers, engineers, architects, estimators, lawyers, auditors, accountants, purchasing and contracting agents, expeditors, timekeepers, clerks and other personnel employed by CONTRACTOR whether at the site or in his principal or a branch office for general administration of the Work and not specifically included in the schedule referred to in

subparagraph 11.4.1--all of which are to be considered administrative costs covered by the Contractor's Fee.

11.5.2 Expenses of CONTRACTOR's principal and branch offices other than his office at the site.

11.5.3 Any part of CONTRACTOR's capital expenses, including interest on CONTRACTOR's capital employed for the Work and charges against CONTRACTOR for delinquent payments.

11.5.4 Cost of premiums for all bonds and for all insurance policies whether or not CONTRACTOR is required by the Contract Documents to purchase and maintain the same (except as otherwise provided in subparagraph 11.4.5.9).

11.5.5 Costs due to negligence of CONTRACTOR, any Subcontractor, or anyone directly or indirectly employed by any of them or for whose acts any of them may be liable, including but not limited to, the correction of defective work, disposal of materials or equipment wrongly supplied and making good any damage to property.

11.5.6 Other overhead or general expense costs of any kind and the costs of any item not specifically and expressly included in paragraph 11.4.

Contractor's Fee:

11.6 The Contractor's Fee which shall be allowed to CONTRACTOR for his overhead and profit shall be determined as follows:

11.6.1 a mutually acceptable fixed fee; or if none can be agreed upon,

11.6.2 a fee based on the following percentages of the various portions of the Cost of the Work:

11.6.2.1 for costs incurred under paragraphs 11.4.1 and 11.4.2, the Contractor's Fee shall be ten percent,

11.6.2.2 for costs incurred under paragraph 11.4.3, the Contractor's Fee shall be five percent; and if a subcontract is on the basis of Cost of the Work Plus a Fee, the maximum allowable to the Subcontractor as a fee for overhead and profit shall be ten percent, and

11.6.2.3 no fee shall be payable on the tasks of costs itemized under paragraphs 11.4.4, 11.4.5 and 11.5.

11.7 The amount of credit to be allowed by CONTRACTOR to OWNER for any such change which results in a net decrease in cost, will be the amount of the actual net decrease. When both additions and credits are involved in any one change, the combined overhead and profit shall be figured on the basis of the net increase, if any.

11.8 Whenever the cost of any Work is to be determined pursuant to paragraphs 11.4 and 11.5, CONTRACTOR will submit in form prescribed by ENGINEER an itemized cost breakdown together with supporting data.

Cash Allowance:

11.9 It is understood that CONTRACTOR has included in the Contract Price all allowances so named in the Contract Documents and shall cause the Work so covered to be done by such materialmen, suppliers or Subcontractors and for such sums within the limit of the allowances as ENGINEER may approve. Upon final payment, the Contract Price shall be adjusted as required and an appropriate Change Order issued. CONTRACTOR agrees that the original Contract Price includes such sums as he deems proper for costs and profit on account of cash allowances. No demand for additional cost or profit in connection therewith will be allowed.

ARTICLE 12 - CHANGE OF THE CONTRACT TIME

12.1 The Contract Time may only be changed by a Change Order. Any claim for an extension in the Contract Time shall be based on written notice delivered to OWNER and ENGINEER within fifteen days of the occurrence of the event giving rise to the claim. Notice of the extent of the claim with supporting data shall be delivered within forty-five days of such occurrence unless ENGINEER allows an additional period of time to ascertain more accurate data. All claims for adjustment in the Contract Time shall be determined by ENGINEER if OWNER and CONTRACTOR cannot otherwise agree. Any change in the Contract Time resulting from any such claim shall be incorporated in a Change Order.

12.2 The Contract Time will be extended in an amount equal to time lost due to delays beyond the control of CONTRACTOR if he makes a claim therefore as provided in paragraph 12.1. Such delays shall include, but not be restricted to, acts or neglect by any separate contractor employed by OWNER, fires, floods, labor disputes, epidemics, abnormal weather conditions, or acts of God.

12.3 All time limits stated in the Contract Documents are of the essence of the Agreement. The provisions of this Article 12 shall not exclude recovery for damages (including compensation for additional professional services) for delay by either party.

ARTICLE 13 - WARRANTY AND GUARANTEE; TESTS AND INSPECTIONS; CORRECTION, REMOVAL OF ACCEPTANCE OF DEFECTIVE WORK

Warranty and Guarantee:

13.1 CONTRACTOR warrants and guarantees to OWNER and ENGINEER that all materials and equipment will be new unless otherwise specified and that all Work will be of good quality and free from faults or defects and in accordance with the requirements of the Contract Documents and of any inspections, tests or approvals referred to in paragraph 13.2. All unsatisfactory Work, all faulty or defective Work, and all Work not conforming to the requirements of the Contract Documents at the time of acceptance thereof or of such inspections, test or approvals, shall be considered defective. Prompt notice of all defects shall be given to CONTRACTOR. All defective Work, whether or not in place, may be rejected, corrected or accepted as provided in this Article 13.

Tests and Inspections:

13.2 If the Contract Documents, laws, ordinances, rules, regulations or orders of any public authority having jurisdiction require any Work to specifically be inspected, tested, or approved by some public body, CONTRACTOR shall assume full responsibility therefore, pay all costs in connection therewith and furnish ENGINEER the required certificates of inspection, testing or approval. All other inspections, tests and approvals required by the Contract Documents shall be performed by organizations acceptable to OWNER and CONTRACTOR and the costs thereof shall be borne by OWNER unless otherwise specified.

13.3 CONTRACTOR shall give ENGINEER timely notice of readiness of the Work for all inspections, tests or approvals. If any such Work required so to be inspected, tested or approved is covered without written approval of ENGINEER, it must, if requested by ENGINEER, be uncovered for observation, and such uncovering shall be at CONTRACTOR's expense unless CONTRACTOR has given ENGINEER timely notice of his intention to cover such Work and ENGINEER has not acted with reasonable promptness in response to such notice.

13.4 Neither observations by ENGINEER nor inspections, tests or approvals by persons other than CONTRACTOR shall relieve CONTRACTOR from his obligations to perform the Work in accordance with the requirements of the Contract Documents.

Access to Work:

13.5 ENGINEER and his representatives and other representatives of OWNER will at reasonable times have access to the Work. CONTRACTOR shall provide proper and safe facilities for such access and observation of the Work and also for any inspection or testing thereof by others.

Uncovering Work:

13.6 If any Work is covered contrary to the written request of ENGINEER, it must, if requested by ENGINEER, be uncovered for his observation and replaced at CONTRACTOR's expense.

13.7 If any Work has been covered which ENGINEER has not specifically requested to observe prior to its being covered, or if ENGINEER considers it necessary or advisable that covered Work be inspected or tested by others, CONTRACTOR, at ENGINEER's request, shall uncover, expose or otherwise make available for observation, inspection or testing as ENGINEER may require, that portion of the Work in question, furnishing all necessary labor, material and equipment. If it is found that such Work is defective, CONTRACTOR shall bear all the expenses of such uncovering, exposure, observation, inspection and testing

and of satisfactory reconstruction, including compensation for additional professional services, and an appropriate deductive Change Order shall be issued. If, however, such Work is not found to be defective, CONTRACTOR shall be allowed an increase in the Contract Price or an extension of the Contract Time, or both, directly attributable to such uncovering, exposure, observation, inspection, testing and reconstruction if he makes a claim therefore as provided in Articles 11, and 12.

OWNER May Stop the Work:

13.8 If the Work is defective, or CONTRACTOR fails to supply sufficient skilled workmen or suitable materials or equipment, or if CONTRACTOR fails to make prompt payments to Subcontractors or for labor, materials or equipment, OWNER may order CONTRACTOR to stop the Work, or any portion thereof, until the cause for such order has been eliminated; however, this right of OWNER to stop the Work shall not give rise to any duty on the part of OWNER to exercise this right for the benefit of CONTRACTOR or any other party.

Correction or Removal of Defective Work:

13.9 If required by ENGINEER prior to approval of final payment, CONTRACTOR shall promptly, without cost to OWNER and as specified by ENGINEER, either correct or defective Work, whether or not fabricated, installed or completed, or, if the Work has been rejected by ENGINEER, remove it from the site and replace it with nondefective Work. If CONTRACTOR does not correct such defective Work or remove and replace such rejected Work within a reasonable time, all as specified in a written notice from ENGINEER, OWNER may have the deficiency corrected or the rejected Work removed and replaced. All direct or indirect costs of such correction or removal and replacement, including compensation for additional professional services, shall be paid by CONTRACTOR, and an appropriate deductive Change Order shall be issued. CONTRACTOR shall also bear the expenses of making good all Work of others destroyed or damaged by his correction, removal or replacement of his defective Work.

One Year Correction Period:

13.10 If after the approval of final payment and prior to the expiration of one year after the date of Substantial Completion or such longer period of time as may be prescribed by law or by the terms of any applicable special guarantee required by the Contract Documents, any Work is found to be defective, CONTRACTOR shall promptly, without cost to OWNER and in accordance with OWNER's written instructions, either correct such defective Work, or, if it has been rejected by OWNER, remove it from the site and replace it with nondefective Work. If CONTRACTOR does not promptly comply with the terms of such instructions, OWNER may have the defective Work corrected or the rejected Work removed and replaced, and all direct and indirect costs of such removal and replacement, including compensation for additional professional services, shall be paid by CONTRACTOR.

Acceptance of Defective Work:

13.11 If instead of requiring correction or removal and replacement of defective Work, OWNER (and, prior to approval of final payment, also ENGINEER) prefers to accept it, he may do so. In such case, if acceptance occurs prior to approval of final payment, a Change Order shall be issued incorporating the necessary revisions in the Contract Documents, including appropriate reduction in the Contract Price; or, if the acceptance occurs after approval of final payment, an appropriate amount shall be paid by CONTRACTOR to OWNER.

Neglected Work by Contractor:

13.12 If CONTRACTOR shall fail to prosecute the Work in accordance with the Contract Documents, including any requirements of the progress schedule, OWNER, after seven days' written notice to CONTRACTOR may, without prejudice to any other remedy he may have, make good such deficiencies and the cost thereof (including compensation for additional professional services) shall be charged against CONTRACTOR if ENGINEER approves such action, in which case a Change Order shall be issued incorporating the necessary revisions in the Contract Documents including an appropriate reduction in the Contract Price. If the payments then or thereafter due CONTRACTOR are not sufficient to cover such amount, CONTRACTOR shall pay the difference to OWNER.

ARTICLE 14 - PAYMENTS AND COMPLETION

Schedules:

14.1 At least ten days prior to submitting the first Application for a progress payment, CONTRACTOR shall submit a progress schedule, a final schedule of Shop Drawing and a schedule of values of the Work. These schedules shall be satisfactory in form and substance to ENGINEER. The schedule of values shall include quantities and unit prices aggregating the Contract Price, and shall subdivide the Work into component parts in sufficient detail to serve as the basis for progress payments during construction. Upon approval of the schedules of values by ENGINEER, it shall be incorporated into the form of Application for Payment furnished by ENGINEER.

Application for Progress Payment:

14.2 At least ten days before such progress payment falls due (but not more often than once a month), CONTRACTOR shall submit to ENGINEER for review an Application for Payment filled out and signed by CONTRACTOR covering the Work completed as of the date of the Application and accompanied by such data and schedules as ENGINEER may reasonably require. If payment is requested on the basis of materials and equipment not incorporated in the Work but delivered and suitably stored at the site or at another location agreed to in writing, the Application for Payment shall also be accompanied by such data, satisfactory to OWNER, as will establish OWNER's title to the material and equipment and protect his interest therein, including applicable insurance. Each subsequent Application for Payment shall include an affidavit of CONTRACTOR stating that all previous progress payments received on account of the Work have been applied to discharge in full all of CONTRACTOR's obligations reflected in prior Applications for Payment.

Contractor's Warranty of Title:

14.3 CONTRACTOR warrants and guarantees that title to all Work, materials and equipment covered by any Application for Payment, whether incorporated in the Project or not, will pass to OWNER at the time of payment free and clear of all liens, claims, security interests and encumbrances (hereafter in these General Conditions referred to as "Liens").

Approval of Payments:

14.4 ENGINEER will, within ten days after receipt of each Application for Payment, either indicate in writing his approval of payment and present the Application to OWNER, or return the Application to CONTRACTOR indicating in writing his reasons for refusing to approve payment. In the latter case,

CONTRACTOR may make the necessary corrections and resubmit the Application. OWNER shall, within ten days of presentation to him of an approved Application for Payment, pay CONTRACTOR the amount approved by ENGINEER.

14.5 ENGINEER's approval of any payment requested in an Application for Payment will constitute a representation by him to OWNER, based on ENGINEER's on-site observations of the Work in progress as an experienced and qualified design professional and on his review of the Application for Payment and the accompanying data and schedules that the Work has progressed to the point indicated; that, to the best of his knowledge, information and belief, the quality of the Work is in accordance with the Contract Documents (subject to the evaluation of the Work as a functioning Project upon Substantial Completion, to the results of any subsequent tests called for in the Contract Documents and any qualifications stated in his approval); and that CONTRACTOR is entitled to payment of the amount approved. However, by approving any such payment ENGINEER will not thereby be deemed to have represented that he made exhaustive or continuous on-site inspections to check the quality or the quantity of the Work, or that he has reviewed the means, methods, techniques, sequences, or procedures of construction, or that he has made any examination to ascertain how or for what purpose CONTRACTOR has used the moneys paid or to be paid to him on account of the Contract Price, or that title to any Work, materials or equipment has passed to OWNER free and clear of any Liens.

14.6 ENGINEER's approval of final payment will constitute an additional representation by him to OWNER that the conditions precedent to CONTRACTOR's being entitled to final payment as set forth in paragraph 14.13 have been fulfilled.

14.7 ENGINEER may refuse to approve the whole or any part of any payment if, in his opinion, it would be incorrect to make such representations to OWNER. He may also refuse to approve any such payment, or, because of subsequently discovered evidence or the results of subsequent inspections or tests, nullify any such payment previously approved, to such extent as may be necessary in his opinion to protect OWNER from loss because:

14.7.1 the Work is defective, or completed Work has been damaged requiring correction or replacement,

14.7.2 claims or Liens have been filed or there is reasonable cause to believe such may be filed,

14.7.3 the Contract Price has been reduced because of Modifications,

14.7.4 OWNER has been required to correct defective Work or complete the Work in accordance with paragraph 13.11, or

14.7.5 of unsatisfactory prosecution of the Work, including failure to furnish acceptable submittals or to clean up.

Substantial Completion:

14.8 Prior to final payment, CONTRACTOR may, in writing to OWNER and ENGINEER, certify that the entire Project is substantially complete and request that ENGINEER issue a certificate of Substantial Completion. Within a reasonable time thereafter, OWNER, CONTRACTOR and ENGINEER shall make an inspection of the Project to determine the status of completion. If ENGINEER does not consider the Project substantially complete, he will notify CONTRACTOR in writing giving his reasons therefore. If ENGINEER considers the Project substantially complete, he will prepare and deliver to OWNER a tentative certificate of Substantial Completion which shall fix the date of Substantial Completion and the responsibilities between OWNER and CONTRACTOR for maintenance, heat and utilities. There shall be attached to the certificate a tentative list of items to be completed or corrected before final payment, and the certificate shall fix the time within which such items shall be completed or corrected, said time to be within the Contract Time. OWNER shall have seven days after receipt of the tentative certificate during which he may make written objection to ENGINEER as to any provisions of the certificate or attached list. If, after considering such objections, ENGINEER concludes that the Project is not substantially complete, he will within fourteen days after submission of the tentative certificate to OWNER notify CONTRACTOR in writing, stating his reasons therefore. If, after consideration of OWNER's objections, ENGINEER considers the Project substantially complete, he will within said fourteen days execute and deliver to OWNER and CONTRACTOR a definitive certificate of Substantial Completion (with a revised tentative list of items to be completed or corrected) reflecting such changes from the tentative certificate as he believes justified after consideration of any objections from OWNER.

14.9 OWNER shall have the right to exclude CONTRACTOR from the Project after the date of Substantial Completion, but OWNER shall allow CONTRACTOR reasonable access to complete or correct items on the tentative list.

Partial Utilization:

14.10 Prior to final payment, OWNER may request CONTRACTOR in writing to permit him to use a specified part of the Project which he believes he may use without significant interference with construction of the other parts of the Project. If CONTRACTOR agrees, he will certify to OWNER and ENGINEER that said part of the Project is substantially complete and request ENGINEER to issue a certificate of Substantial Completion for that part of the Project. Within a reasonable thereafter OWNER, CONTRACTOR and ENGINEER shall make an inspection of that part of the Project to determine its status of completion. If ENGINEER does not consider that it is substantially complete, he will notify OWNER and CONTRACTOR in writing giving his reasons therefore. If ENGINEER considers that part of the Project to be substantially complete, he will execute and deliver to OWNER and CONTRACTOR a certificate to that effect, fixing the date of Substantial Completion as to that part of the Project, attaching thereto a tentative list of items to be completed or corrected before final payment and fixing the responsibility between OWNER and CONTRACTOR for maintenance, heat and utilities as to that part of the Project. OWNER shall have the right to exclude CONTRACTOR from any part of the Project which ENGINEER has so certified to be substantially complete, but OWNER shall allow CONTRACTOR reasonable access to complete or correct items on the tentative list.

Final Inspection:

14.11 Upon written notice from CONTRACTOR that the Project is complete, ENGINEER will make a final inspection with OWNER and CONTRACTOR and will notify CONTRACTOR in writing of all particulars in which this inspection reveals that the Work is incomplete or defective. CONTRACTOR shall immediately take such measures as are necessary to remedy such deficiencies.

Final Application for Payment:

14.12 After CONTRACTOR has completed all such corrections to the satisfaction of ENGINEER and delivered all maintenance and operating instructions, schedules, guarantees, Bonds, certificates of inspection and other documents--all as required by the Contract Documents, he may make application for final payment following the procedure for progress payments. The final Application for Payment shall be accompanied by such data and schedules as ENGINEER may reasonably require, together with complete and legally effective releases or waivers (satisfactory to OWNER) of all Liens arising out of the Contract Documents and the labor and services performed and the material and equipment furnished thereunder. In lieu thereof and as approved by OWNER, CONTRACTOR may furnish receipts or releases in full; an affidavit of CONTRACTOR that the releases and receipts include all labor, services, materials and equipment for which a Lien could be filed, and that all payrolls, material and equipment bills, and other indebtedness connected with the Work for which OWNER or his property might in any way be responsible, have been paid or otherwise satisfied; and consent of the Surety, if any, to final payment. If any Subcontractor, materialman, fabricator or supplier fails to furnish a release or receipt in full, CONTRACTOR may furnish a Bond or other collateral satisfactory to OWNER to indemnify him against any Lien.

Approval of Final Payment:

14.13 If, on the basis of his observation and review of the Work during construction, his final inspection and his review of the final Application for Payment--all as required by the Contract Documents, ENGINEER is satisfied that the Work has been completed and CONTRACTOR has fulfilled all his obligations under the Contract Documents, he will, within ten days after receipt of the final Application for Payment, indicate in writing his approval of payment and present the Application to OWNER for payment. Thereupon ENGINEER will give written notice to OWNER and CONTRACTOR that the Work is acceptable subject to the provisions of paragraph 14.16. Otherwise, he will return the Application to CONTRACTOR, indicating in writing his reasons for refusing to approval final payment, in which case CONTRACTOR shall make the necessary corrections and resubmit the Application. OWNER shall, within ten days of presentation to him

of an approved final Application for Payment, pay CONTRACTOR the amount approved by ENGINEER.

14.14 If after Substantial Completion of the Work final completion thereof is materially delayed through no fault of CONTRACTOR, and ENGINEER so confirms, OWNER shall, upon certification by ENGINEER, and without terminating the Agreement, make payment of the balance due for that portion of the Work fully completed and accepted. If the remaining balance for Work not fully completed or corrected is less than the retainage stipulated in the Agreement, and if Bonds have been furnished as required in paragraph 5.1, the written consent of the Surety to the payment of the balance due for that portion of the Work fully completed and accepted shall be submitted by the CONTRACTOR to the ENGINEER prior to certification of such payment. Such payment shall be made under the terms and conditions governing final payment, except that it shall not constitute a waiver of claims.

Contractor's Continuing Obligation:

14.15 CONTRACTOR's obligation to perform the Work and complete the Project in accordance with the Contract Documents shall be absolute. Neither approval or any progress or final payment by ENGINEER, nor the issuance of a certificate of Substantial Completion, nor any payment by OWNER to CONTRACTOR under the Contract Documents, nor any use or occupancy of the Project or any part thereof by OWNER, nor any act of acceptance by OWNER nor any failure to do so, nor any correction of defective work by OWNER shall constitute an acceptance of Work not in accordance with the Contract Documents.

Waiver of Claim:

14.16 The making and acceptance of final payment shall constitute:

14.16.1 a waiver of all claims by OWNER against CONTRACTOR other than those arising from unsettled Liens, from defective work appearing after final inspection pursuant to paragraph 14.11 or from failure to comply with the requirements of the Contract Documents or the terms of any special guarantees specified therein, and

14.16.2 a waiver of all claims by CONTRACTOR against OWNER other than those previously made in writing and still unsettled.

ARTICLE 15 - SUSPENSION OF WORK AND TERMINATION

OWNER May Suspend Work:

15.1 OWNER may, at any time and without cause, suspend the Work or any portion thereof for a period of not more than ninety days by notice in writing to CONTRACTOR and ENGINEER which shall fix the date on which Work shall be resumed. CONTRACTOR shall resume the Work on the date so fixed. CONTRACTOR will be allowed an increase in the Contract Price or an extension of the Contract Time, or both, directly attributable to any suspension if he makes a claim therefore as provided in Articles 11 and 12.

OWNER May Terminate:

15.2 If CONTRACTOR is adjusted a bankrupt or insolvent, or if he makes a general assignment for the benefit of his creditors, or if a trustee or receiver is appointed for CONTRACTOR or for any of his property, or if he files a petition to take advantage of any debtor's act, or to reorganize under the bankruptcy or similar laws, or if he repeatedly fails to supply sufficient skilled workmen or suitable materials or equipment, or if he repeatedly fails to make prompt payments to Subcontractors or for labor, materials or equipment or if he disregards laws, ordinances, rules, regulations or orders of any public body having jurisdiction, or if he disregards the authority of ENGINEER, or if he otherwise violates any provision of the Contract Documents, then OWNER may, without prejudice to any other right or remedy and after giving CONTRACTOR and his Surety seven days' written notice, terminate the services of CONTRACTOR and take possession of the Project and of all materials, equipment, tools, construction equipment and machinery thereon owned by CONTRACTOR, and finish the Work by whatever method he may deem expedient. In such case CONTRACTOR shall not be entitled to receive any further payment until the Work is finished. If the unpaid balance of the Contract Price exceeds the direct and indirect costs of completing the Project, including compensation for additional professional services, such excess shall be paid to CONTRACTOR. If such costs exceed such unpaid balance, CONTRACTOR shall pay the difference to OWNER. Such costs incurred by OWNER shall be determined by ENGINEER and incorporated in a Change Order.

15.3 Where CONTRACTOR's services have been so terminated by OWNER, said terminations shall not affect any rights of OWNER against CONTRACTOR then existing or which may thereafter accrue. Any retention or payment of moneys by OWNER due CONTRACTOR will not release CONTRACTOR from liability.

15.4 Upon seven days' written notice to CONTRACTOR and ENGINEER, OWNER may, without cause and without prejudice to any right or remedy, elect to abandon the Project and terminate the Agreement. In such case, CONTRACTOR shall be paid for all Work executed and any expense sustained plus a reasonable profit.

Contractor May Stop Work or Terminate:

15.5 If, through not act or fault of CONTRACTOR, the Work is suspended for a period of more than ninety days by OWNER or under an order of court or other public authority, or ENGINEER fails to act on any Application for Payment within thirty days after it is submitted, or OWNER fails to pay CONTRACTOR any sum approved by ENGINEER or awarded by arbitrators within thirty days of its approval and presentation, then CONTRACTOR may, upon seven days' written notice to OWNER and ENGINEER, terminate the Agreement and recover from OWNER payment for all Work executed and any expense sustained plus a reasonable profit. In addition and in lieu of terminating the Agreement, if ENGINEER has failed to act on an Application for Payment or OWNER has failed to make any payment as aforesaid, CONTRACTOR may upon seven days' notice to OWNER and ENGINEER stop the Work until he has been paid all amounts then due.

ARTICLE 16 - ARBITRATION

16.1 All claims, disputes and other matters in question arising out of, or relating to, this Agreement or the breach thereof except for claims which have been waived by the making or acceptance of final payment as provided by paragraph 14.16, shall be decided by arbitration in accordance with the Construction Industry Arbitration Rules of the American Arbitration Association then obtaining. This Agreement so to arbitrate shall be specifically enforceable under the prevailing arbitration law. The award rendered by the arbitrators shall be final, and judgment may be entered upon it in any court having jurisdiction thereof.

16.2 Notice of the demand for arbitration shall be filed in writing with the other party to the Agreement and with the American Arbitration Association, and a copy shall be filed with ENGINEER. The demand for arbitration shall be made within the thirty-day period specified in paragraph 9.10 where applicable, and in all other cases within a reasonable time after the claim, dispute or other matter in question has arisen, and in no event shall it be made after institution of legal or equitable proceedings based on such claim, dispute or other matter in question would be barred by the applicable statute of limitations.

16.3 CONTRACTOR will carry on the Work and maintain the progress schedule during any arbitration proceedings, unless otherwise agreed by him and OWNER in writing.

ARTICLE 17 - MISCELLANEOUS

Giving Notice:

17.1 Whenever any provision of the Contract Documents requires the giving of written notice it shall be deemed to have been validly given if delivered in person to the individual or to a member of the firm or to an officer of the corporation for whom it is intended, or if delivered at or sent by registered or certified mail, postage prepaid, to the last business address known to him who gives the notice.

Computation of Time:

17.2 When any period of time is referred to in the Contract Documents by days, it shall be computed to exclude the first and include the last day of such period. If the last day of such period falls on a Saturday or Sunday or on a day made a legal holiday by the law of the applicable jurisdiction, such day shall be omitted from the computation.

General:

17.3 All moneys not paid when due hereunder shall bear interest at the maximum rate allowed by law at the place of the Project.

17.4 All Specifications, Drawings and copies thereof furnished by ENGINEER shall remain his property. They shall not be used on another Project, and, with the exception of those sets which have been signed in connection with the execution of the Agreement, shall be returned to him on request upon completion of the Project.

17.5 The duties and obligations imposed by these General Conditions and the rights and remedies available hereunder, and, in particular but without limitation, the warranties, guarantees and obligations imposed upon CONTRACTOR by paragraphs 6.30, 13.1, 13.10 and 14.3 and the rights and remedies available to OWNER and ENGINEER thereunder, shall be in addition to, and shall not be construed in any way as a limitation of, any rights and remedies available to them which are otherwise imposed or available by law, by special guarantees or by other provisions of the Contract Documents.

17.6 Should OWNER or CONTRACTOR suffer injury or damage to his person or property because of any error, omission or act of the other or of any of his employees or agents or others for whose acts he is legally liable, claim shall be made in writing to the other party within a reasonable time of the first observance of such injury or damage.

17.7 The Contract Documents shall be governed by the law of the place of the Project.

TABLE OF CONTENTS OF SUPPLEMENTARY CONDITIONS

Article Number	Title	Page
1	Standard Codes	B-41
2	Abbreviations	B-41
3	Time of Completion	B-41
4	Damages for Avoidable Delay	B-42
5	Insurance Requirements	B-42
6	Indemnity	B-42
7	General Notes	B-43
8	Project Specification	B-45
9	Prevailing Wages	B-49
10	Federal-Aid Contract Language	B-56

SUPPLEMENTARY CONDITIONS

1.1 Standard Codes

The following standard codes may be referred to herein:

Uniform Building Code (ICBO), current addition
California Uniform Building Code (CAUBC), current edition
Uniform Plumbing Code (IAPMO), current addition
National Electrical Code, current addition

2.1 Abbreviations

Wherever the following abbreviations are used, the intent and meaning shall be interpreted as follows:

Conc.	concrete
Elev.	elevation
Ext.	exterior
FT, ft.	feet
GA, ga.	gage
MAX., max.	maximum
MIN., min.	minimum
L.F.	lineal feet
SQ. FT.	square feet
DIA.	diameter
EA.	each
NO.	number
L.S.	lump sum
CMP	corrugated metal pipe
AB	aggregate base
SSP	sanitary sewer pipe
PSI, psi	pounds per square inch
PSF, psf	pounds per square foot
TYP	typical

3.1 Time of Completion

The CONTRACTOR shall prosecute the work so that all portions of the project shall be complete and ready for use within 60 working days after the date of notice to proceed.

4.1 Damages for Avoidable Delay

In accordance with the provisions of this contract, the CONTRACTOR and the OWNER agree that OWNER will incur extra cost and expense if the work is not completed within the time allowed in the previous paragraph. Inasmuch as the amount of these damages will be difficult to compute, CONTRACTOR and OWNER hereby agree that CONTRACTOR shall pay $500.00 per calendar day for each day beyond the time of completion for which the work has not been completed by CONTRACTOR. Completion is defined for purposes of this article as the condition of the work at the time the Engineer prepares a definitive certificate of Substantial Completion as referred to in Article 14.8 of the General Conditions.

5.1 Insurance Requirements

CONTRACTOR shall purchase and maintain insurance as required under Article 5.3 of the General Conditions in amounts of coverage not less than the following amounts:

5.1.1	General Liability: (Including operations, products and completed operations)	$1,000,000 per occurrence for bodily injury, personal injury and property damage. If Commercial General Liability Insurance or other form with a general aggregate limit is used, either the general aggregate limit shall apply separately to this project/location or the general aggregate limit shall be twice the required occurrence limit.
5.1.2	Automobile Liability:	$1,000,000 per accident for bodily injury and property damage.

6.1 Indemnity

CONTRACTOR shall indemnify and hold harmless ENGINEER and the OWNER and its officers, officials, employees and volunteers from and against all claims, damages, losses and expenses including attorney fees arising out of the performance of the work described herein, caused in whole or in part by any negligent act or omission of the CONTRACTOR, any subcontractor, anyone directly or indirectly employed by any of them or anyone for whose acts any of them may be liable, except where caused by the active negligence, sole negligence, or willful misconduct of the OWNER.

7.1. General Notes:

A. The CONTRACTOR shall examine the working drawings: architectural, structural, mechanical and electrical, and shall notify the architect and/or engineers of any discrepancies he may find before proceeding with the work.

B. The CONTRACTOR shall verify and be responsible for all dimensions and conditions at the site and shall notify the designer of discrepancies between the actual conditions and information shown on the drawings before proceeding with the work.

C. All work shall conform to the minimum standards for the latest edition of the Uniform Building Code and such other regulating agencies exercising authority over any portion of the work.

D. Specifications (if included) are integral to the drawings. Notify designer before proceeding with any work if any disparity arises between drawings and specifications.

E. All work shall conform to the best practice prevailing in the various trades comprising the work.

F. Specific notes and details shall take precedence over General Notes and Typical Details. Dimensions shall supersede scale.

G. Details shown describe the general intent and character of the project. Any specific areas not drawn shall be similar to those details that are related in location, intent, or function.

H. All subcontractors shall be held responsible for all conditions, ordinances, code and requirements pertinent to their category of work as dictated by regulatory agencies.

I. All subcontractors shall be held responsible for any damage to another's work caused by subcontractor, its employees or agents.

J. General CONTRACTOR to maintain site in a clean and neat manner. Remove and legally dispose of all debris, rubbish, etc. Remove all materials from those not intended for their application, such as paint spatters, masking materials, asphalt, etc.

K. The Contractor shall contact the City of Nevada City, City Engineer to schedule a pre-construction meeting at least ten (10) working days prior to the start of construction (telephone 530-265-2496).

L. Contractor shall assume sole and complete responsibility for construction of this project, including safety of all persons and property. This requirement shall apply continuously and not be limited to normal working hours. The contractor shall defend, indemnify and hold the owner and the design engineer harmless from any and all liability, real or alleged in connection with the performance of the work on this project, excepting for liability arising from the intentional negligence of the owner or engineer.

M. The contractor is hereby notified that prior to commencing construction he is responsible for contacting all utility companies for verification at the construction site of the locations of all underground facilities where such facilities may conflict with placement of improvements shown on this plan. Call ‘Underground Service Alert’ at 800-642-2444 prior to any excavation.

N. The locations of all underground facilities shown on this plan are approximate. A reasonable effort has been made to locate and delineate all underground facilities. However, the design

engineer assumes no liability for the accuracy of completeness of the existing facilities shown on hereon or for the existence of other underground utilities not shown on these plans. The contractor shall verify the location of all existing facilities interfering with the construction of improvements. If so directed by the design engineer, the contractor shall stop work immediately until remedial action can be taken. Any cost resulting from the contractors failure to report and or failure to stop work as directed will be the responsibility of the contractor.

O. The contractor shall request construction staking for any particular phase of work no less than two working days prior to commencement of construction.

P. The contractor is responsible for the protection of all existing monuments and other survey markers during construction. Monuments disturbed, or lost, due to construction activities will require that the contractor have them replaced, in kind, by a licensed California Land Surveyor-who will be required to file either a Corner Record, or Record of Survey, with the County-whichever will meet the requirements of L.S. Act Section 8773

Q. The Contractor shall provide one complete set of As-Built Drawings. Any changes to the plans shall be shown on a clean set of drawings marked in red and given to the City Engineer at job completion.

8.1 Project Specifications:

Each item of work is bid as complete in place and includes all tools, equipment, materials, and labor to complete the item. The bid items are intended to encompass all work shown on the plans and specified in these specifications. Any item of work not specifically listed in the project quantities and bid sheet shall be paid for in other items of work and no additional payments will be made.

MOBILIZATION, CLEARING AND EARTHWORK

This item shall all mobilization and all clearing and removal of vegetation and improvements that conflict with the work shown in the plans. Stumps and roots shall be removed to a minimum depth of 2' below the grading plane. Earthwork includes sawcutting, demolition, excavation and compaction activities that are not otherwise included in another item of work. Excavated material, vegetation and demolition debris will become the property of the contractor and removed and disposed of at contractor's expense.

All fills shall be constructed to 90% relative compaction excepting the upper 6" shall be constructed to 95% relative compaction. All excavation areas shall be scarified to 6" below subgrade and replaced at 95% relative compaction. Compaction testing will be performed by the City under contract with a Geotechnical Engineer in accordance with Caltrans Standard Specifications. If grading or other construction operations unearth archaeological or historic artifacts or resources, construction activities shall cease and the contractor shall notify the City of Nevada City at (530) 265-2496.

CONCRETE CURB, SIDEWALK AND DRIVEWAYS

Concrete work shall conform to the requirements of section 73 of the Standard Specifications and the Standard Plans. Sidewalks, curbs, downslope rear curbs, upslope rear curbs, driveways, and curb ramps will be constructed as shown on the plans. Work includes patching the AC surface as necessary to provide a finished surface between the curb and roadway pavement.

Concrete work will also include all work necessary to prepare the subgrade material. Subgrade shall be watered and compacted prior to placing concrete. Voids and soft areas in the subgrade shall be backfilled with suitable material, as necessary, to provide a stabile base. All sidewalk and driveway work will be paid by the UNIT PRICE for curb, sidewalk and driveway and includes associated curbs (front curbs, downslope rear curbs, upslope rear curbs), all valley gutter, all culverts or piping for drainage under concrete surfaces, all associated ramps and truncated domes, all steps or stairways and all work and material necessary to construct concrete surfaces as shown on the plans.

RETAINING WALL

Retaining walls shall be constructed as shown in the plans, at the locations indicated, and to the grades established by the engineer. Retaining wall construction includes all excavation and subgrade preparation necessary to construct the wall and includes backfill necessary to construct sidewalk. Retaining wall also includes rubble facing. Walls will be paid by the SQFT of wall surface.

ASPHALT CONCRETE

Asphalt concrete shall be Type A or B 1/2-inch maximum medium gradation and shall conform to the provisions in Section 39, "Asphalt Concrete," of the Standard Specifications and these Special Provisions. Asphalt cement shall be grade PG 64-16 conforming to the requirements of Section 92 of the Standard Specifications.

Paving shall be accomplished using a paving machine capable of paving widths and crown configurations required for this project. The paving machine shall comply with Section 39-5.01 of the Standard Specifications. At a minimum, the paving machine shall be capable of paving widths of 8' to

16’ including a 12’ lane and a 4’ shoulder in a single pass. Screed extensions shall be capable of varying the width of paving as well as adjusting to the slope of the shoulder or to provide an edge taper.

Prior to starting work, the contractor shall submit a paving plan in conjunction with the Traffic Control Plan that will detail the paving methods and equipment to be employed in the work. The plan will provide a schedule for the work and the method and timing of completing the various portions of the project and address the surfacing available to public traffic during the various phases of work. The paving plan is subject to the approval of the City Engineer. No work will be allowed prior to approval.

All existing A.C. surfaces shall be saw cut or ground to a depth of at least 0.2-foot a distance of 1' (one foot) minimum beyond limits of disturbance to a neat, straight line and removed. The exposed edge shall be sealed with emulsion prior to paving.

The Contractor shall submit an asphalt concrete mix design with substantiating laboratory test results to the Engineer for approval prior to paving operations. The Engineer will review the submittal; and, if acceptable, will give approval of the mix design within 5 working days thereafter. The Contractor shall not proceed with paving operations until the mix design is approved for this project. CALTRANS preapproved mix designs are acceptable. The percentage of bitumen to be used in the asphalt concrete mix will be as designated by the Engineer.

All asphalt concrete used on the project, including on overlays, leveling courses and digouts shall be included in this item. The contract unit price paid for asphalt concrete shall include full compensation for furnishing all labor, materials, tools, equipment and incidentals for doing all the work involved in the paving operations including striping, pavement marking, raising all existing manhole frames, valve boxes, and monument boxes to finished grade of the new surfacing, and no additional compensation will be allowed.

GRIND ASPHALT CONCRETE

This work shall consist of removing existing asphalt concrete surfacing as indicated in the Project Quantity Table and Paving Location Map. Material removed during a work period shall be replaced before the time the lane is to be opened to public traffic, unless the Engineer has approved an alternative plan.

Asphalt concrete grindings shall be processed to a size of not more than 2”. Grindings greater than 2” shall be reprocessed to a smaller size. Grindings shall be stockpiled at a location within Nevada City, as directed by the Engineer.

The Lump Sum price paid for Grinding Asphalt Concrete shall include full compensation for furnishing all labor, materials, tools, equipment, and incidentals, and for doing all the work involved in grinding asphalt concrete, processing the grindings for use as shoulder backing and base material and transporting the grindings.

AGGREGATE BASE

Aggregate Base for new pavement areas shall be Class 2, 6 inch thickness, and shall conform to the provisions in Section 26, "Aggregate Bases,” of the Standard Specifications and these Special Provisions. Asphalt grindings is acceptable for use as Aggregate Base where roadways are being widened and as directed by the Engineer.

The Lump Sum price paid for Aggregate Base shall include full compensation for furnishing all labor, materials, tools, equipment, and incidentals, and for doing all the work involved in subgrade preparation, furnishing, placing and compacting base material.

TRAFFIC CONTROL

Traffic control shall consist of closing traffic lanes in conformance with the details shown on the plans and the provisions in Section 12, "Construction Area Traffic Control Devices," of the Standard Specifications and these Special Provisions.

Construction activity requiring lane closures shall conform to the following restrictions; The travel way may be reduced to one 11 foot lane of traffic with two way stop control.
The Contractor shall provide access to parking lots, driveways, residences and businesses at all times unless otherwise approved by the City Engineer. Pedestrian and bicycle access facilities shall be provided through construction areas within the right of way, unless otherwise approved by the City Engineer.

The provisions in this section will not relieve the Contractor from the responsibility to provide additional devices or take measures as may be necessary to comply with the provisions in Section 7-1.09, "Public Safety," of the Standard Specifications.

When flaggers are required, they shall have radios and be in contact with personnel in the work area. One-way traffic shall be controlled through the project in conformance with the Caltrans Standard Plan T-13, "Traffic Control System for Lane Closure on Two Lane Conventional Highways" and these Special Provisions.

A Traffic Control Plan for controlling the traffic and parking, including shoulder closures, detours and lane closures on City roadways and pedestrian facilities in conjunction with the work shall be submitted by the Contractor. The Traffic Control Plan shall be consistent with all specific site conditions and work conditions for this project. Contractor shall submit the proposed Traffic Control Plan to the City Engineer for review and comments no later than five (5) working days prior to starting work. Construction shall not begin until the traffic control plan has been reviewed and accepted by the City Engineer.

The Traffic Control Plan shall conform to the Plans, Standard Specifications, the California MUTCD dated January13, 2012, Section 12, “Construction Area Traffic Control Devices,” of the Standard Specifications, and these Special Provisions.

Whenever lane lines and centerlines are obliterated, the minimum laneline and centerline delineation to be provided shall be temporary raised pavement markers placed at longitudinal intervals of not more than 24 feet. The temporary raised pavement markers shall be the same color as the lane line or centerline the markers replace. Temporary raised pavement markers shall be, at the option of the Contractor, one of the temporary pavement markers approved for short term day/night use (14 days or less) by Caltrans.

Full compensation for furnishing the Traffic Control Plan, temporary markers, all signs, pedestrian and bicycle access facilities, posting signs, detours, lane closures, materials, tools, equipment, and incidentals and for doing all work involved complete in place as shown on the plans, as specified in the Standard Specifications and these Special Provisions, and as directed by the Engineer will be included in the Contract lump sum price paid for “Traffic Control System” and no additional compensation will be allowed.

The first paragraph of Section 12-2.02, “Flagging Costs,” of the Standard Specifications is amended in its entirety to read as follows:
Full compensation for furnishing all flaggers, including transporting flaggers, and providing stands, towers, or lights for use of flaggers to provide for passage of public traffic through the work under the provisions in Sections 7-1.08, “Public Convenience,” and 7-1.09, “Public Safety,” of the Standard Specifications shall be considered as included in the Contract lump sum price paid for “Traffic Control” and no additional

compensation will be allowed.

EROSION CONTROL

In accordance with the Standard Specifications, Best Management Practices (BMP) measures shall be implemented to control surface erosion and protect water quality during project implementation. BMPs will be required around the perimeter of all active work areas including staging areas, down slope of all proposed excavation and soil placement areas and stockpiles. BMPs include temporary chain link fence barrier, fiber rolls, construction and silt fence, stabilized construction entrance, tree protection, dust control, stockpile management and other applicable BMPs as determined by the Engineer. All BMPs shall be maintained and removed following completion of the project as directed by the Engineer.

Full compensation for furnishing all labor and materials for Erosion Control BMPs shall be included in the bid for Mobilization and no additional compensation will be allowed.

9.1 Prevailing Wages

Contractor shall pay each laborer, workman or mechanic in accordance with Federal Prevailing Wage Rates and the California Labor Code (excerpts included herein). These wage rates are hereby made a part of this contract:

State General Prevailing Wage Determinations in effect on date advertised
General prevailing wage determination
Journeyman and Apprentice Prevailing Wage Rates can be accessed at the following websites:
http://www.dir.ca.gov/dlsr/DPreWageDetermination.html and http://www.dir.ca.gov/das/publicworks.html
Reference: Labor Code 1773.2

Federal Prevailing Wage Determinations in effect on bid date
General Decision # CA150009 CA9
General Decision County Index for CA: http://www.wdol.gov/wdol/scafiles/davisbacon/ca.html.
Select the county where the work will be performed. *Reference: Davis Bacon Act*
http://www.dot.ca.gov/hq/esc/oe/federal-wages/ca09.pdf

Electronic Certified Payroll Records

- All contractors must furnish electronic certified payroll records to the Labor Commissioner using the online eCPR data system
- No contractor or subcontractor may be listed on a bid proposal for a public works project unless registered with the Department of Industrial Relations pursuant to Labor Code section 1725.5 [with limited exceptions from this requirement for bid purposes only under Labor Code section 1771.1(a)].
- No contractor or subcontractor may be awarded a contract for public work on a public works project unless registered with the Department of Industrial Relations pursuant to Labor Code section 1725.5.
- This project is subject to compliance monitoring and enforcement by the Department of Industrial Relations.
- The contractor shall post job site notices prescribed by regulation. (*See* 8 Calif. Code Reg. §16451(d)

Excerpts from CA Labor Code

1771.1. (a) A contractor or subcontractor shall not be qualified to bid on, be listed in a bid proposal, subject to the requirements of Section 4104 of the Public Contract Code, or engage in the performance of any contract for public work, as defined in this chapter, unless currently registered and qualified to perform public work pursuant to Section 1725.5. It is not a violation of this section for an unregistered contractor to submit a bid that is authorized by Section 7029.1 of the Business and Professions Code or by Section 10164 or 20103.5 of the Public Contract Code, provided the contractor is registered to perform public work pursuant to Section 1725.5 at the time the contract is awarded.

1774. The contractor to whom the contract is awarded, and any subcontractor under him, shall pay not less than the specified prevailing rates of wages to all workmen employed in the execution of the contract.

1775.

(a) (1) The contractor and any subcontractor under the contractor shall, as a penalty to the state or political subdivision on whose behalf the contract is made or awarded, forfeit not more than two hundred dollars ($200) for each calendar day, or portion thereof, for each worker paid less than the prevailing wage rates as determined by the director for the work or craft in which the worker is employed for any public work done under the contract by the contractor or, except as provided in subdivision (b), by any subcontractor under the contractor.

(2) (A) The amount of the penalty shall be determined by the Labor Commissioner based on consideration of both of the following:

(i) Whether the failure of the contractor or subcontractor to pay the correct rate of per diem wages was a good faith mistake and, if so, the error was promptly and voluntarily corrected when brought to the attention of the contractor or subcontractor.

(ii) Whether the contractor or subcontractor has a prior record of failing to meet its prevailing wage obligations.

(B) (i) The penalty may not be less than forty dollars ($40) for each calendar day, or portion thereof, for each worker paid less than the prevailing wage rate, unless the failure of the contractor or subcontractor to pay the correct rate of per diem wages was a good faith mistake and, if so, the error was promptly and voluntarily corrected when brought to the attention of the contractor or subcontractor.

(ii) The penalty may not be less than eighty dollars ($80) for each calendar day, or portion thereof, for each worker paid less than the prevailing wage rate, if the contractor or subcontractor has been assessed penalties within the previous three years for failing to meet its prevailing wage obligations on a separate contract, unless those penalties were subsequently withdrawn or overturned.

(iii) The penalty may not be less than one hundred twenty dollars ($120) for each calendar day, or portion thereof, for each worker paid less than the prevailing wage rate, if the Labor Commissioner determines that the violation was willful, as defined in subdivision (c) of Section 1777.1.

(C) If the amount due under this section is collected from the contractor or subcontractor, any outstanding wage claim under Chapter 1 (commencing with Section 1720) of Part 7 of Division 2 against that contractor or subcontractor shall be satisfied before applying that amount to the penalty imposed on that contractor or subcontractor pursuant to this section.

(D) The determination of the Labor Commissioner as to the amount of the penalty shall be reviewable only for abuse of discretion.

(E) The difference between the prevailing wage rates and the amount paid to each worker for each calendar day or portion thereof for which each worker was paid less than the prevailing wage rate shall be paid to each worker by the contractor or subcontractor, and the body awarding the contract shall cause to be inserted in the contract a stipulation that this section will be complied with.

(b) If a worker employed by a subcontractor on a public works project is not paid the general prevailing rate of per diem wages by the subcontractor, the prime contractor of the project is not liable for any penalties under subdivision (a) unless the prime contractor had knowledge of that failure of the

subcontractor to pay the specified prevailing rate of wages to those workers or unless the prime contractor fails to comply with all of the following requirements:
(1) The contract executed between the contractor and the subcontractor for the performance of work on the public works project shall include a copy of the provisions of this section and Sections 1771, 1776, 1777.5, 1813, and 1815.
(2) The contractor shall monitor the payment of the specified general prevailing rate of per diem wages by the subcontractor to the employees, by periodic review of the certified payroll records of the subcontractor.
(3) Upon becoming aware of the failure of the subcontractor to pay his or her workers the specified prevailing rate of wages, the contractor shall diligently take corrective action to halt or rectify the failure, including, but not limited to, retaining sufficient funds due the subcontractor for work performed on the public works project.
(4) Prior to making final payment to the subcontractor for work performed on the public works project, the contractor shall obtain an affidavit signed under penalty of perjury from the subcontractor that the subcontractor has paid the specified general prevailing rate of per diem wages to his or her employees on the public works project and any amounts due pursuant to Section 1813.
(c) The Division of Labor Standards Enforcement shall notify the contractor on a public works project within 15 days of the receipt by the Division of Labor Standards Enforcement of a complaint of the failure of a subcontractor on that public works project to pay workers the general prevailing rate of per diem wages.
(Amended by Stats. 2011, Ch. 677, Sec. 1. Effective January 1, 2012.)

1776.
(a) Each contractor and subcontractor shall keep accurate payroll records, showing the name, address, social security number, work classification, straight time and overtime hours worked each day and week, and the actual per diem wages paid to each journeyman, apprentice, worker, or other employee employed by him or her in connection with the public work. Each payroll record shall contain or be verified by a written declaration that it is made under penalty of perjury, stating both of the following:
(1) The information contained in the payroll record is true and correct.
(2) The employer has complied with the requirements of Sections 1771, 1811, and 1815 for any work performed by his or her employees on the public works project.
(b) The payroll records enumerated under subdivision (a) shall be certified and shall be available for inspection at all reasonable hours at the principal office of the contractor on the following basis:
(1) A certified copy of an employee's payroll record shall be made available for inspection or furnished to the employee or his or her authorized representative on request.
(2) A certified copy of all payroll records enumerated in subdivision (a) shall be made available for inspection or furnished upon request to a representative of the body awarding the contract and the Division of Labor Standards Enforcement of the Department of Industrial Relations.
(3) A certified copy of all payroll records enumerated in subdivision (a) shall be made available upon request by the public for inspection or for copies thereof. However, a request by the public shall be made through either the body awarding the contract or the Division of Labor Standards Enforcement. If the requested payroll records have not been provided pursuant to paragraph (2), the requesting party shall, prior to being provided the records, reimburse the costs of preparation by the contractor, subcontractors, and the entity through which the request was made. The public may not be given access to the records at the principal office of the contractor.
(c) Unless required to be furnished directly to the Labor Commissioner in accordance with paragraph (3) of subdivision (a) of Section 1771.4, the certified payroll records shall be on forms provided by the Division of Labor Standards Enforcement or shall contain the same information as the forms provided by the division. The payroll records may consist of printouts of payroll data that are maintained as computer records, if the printouts contain the same information as the forms provided by the division and the printouts are verified in the manner specified in subdivision (a).

(d) A contractor or subcontractor shall file a certified copy of the records enumerated in subdivision (a) with the entity that requested the records within 10 days after receipt of a written request.
(e) Except as provided in subdivision (f), any copy of records made available for inspection as copies and furnished upon request to the public or any public agency by the awarding body or the Division of Labor Standards Enforcement shall be marked or obliterated to prevent disclosure of an individual's name, address, and social security number. The name and address of the contractor awarded the contract or the subcontractor performing the contract shall not be marked or obliterated. Any copy of records made available for inspection by, or furnished to, a multiemployer Taft-Hartley trust fund (29 U.S.C. Sec. 186(c)(5)) that requests the records for the purposes of allocating contributions to participants shall be marked or obliterated only to prevent disclosure of an individual's full social security number, but shall provide the last four digits of the social security number. Any copy of records made available for inspection by, or furnished to, a joint labor-management committee established pursuant to the federal Labor Management Cooperation Act of 1978 (29 U.S.C. Sec. 175a) shall be marked or obliterated only to prevent disclosure of an individual's social security number.
(f) (1) Notwithstanding any other provision of law, agencies that are included in the Joint Enforcement Strike Force on the Underground Economy established pursuant to Section 329 of the Unemployment Insurance Code and other law enforcement agencies investigating violations of law shall, upon request, be provided nonredacted copies of certified payroll records. Any copies of records or certified payroll made available for inspection and furnished upon request to the public by an agency included in the Joint Enforcement Strike Force on the Underground Economy or to a law enforcement agency investigating a violation of law shall be marked or redacted to prevent disclosure of an individual's name, address, and social security number.
(2) An employer shall not be liable for damages in a civil action for any reasonable act or omission taken in good faith in compliance with this subdivision.
(g) The contractor shall inform the body awarding the contract of the location of the records enumerated under subdivision (a), including the street address, city, and county, and shall, within five working days, provide a notice of a change of location and address.
(h) The contractor or subcontractor has 10 days in which to comply subsequent to receipt of a written notice requesting the records enumerated in subdivision (a). In the event that the contractor or subcontractor fails to comply within the 10-day period, he or she shall, as a penalty to the state or political subdivision on whose behalf the contract is made or awarded, forfeit one hundred dollars ($100) for each calendar day, or portion thereof, for each worker, until strict compliance is effectuated. Upon the request of the Division of Labor Standards Enforcement, these penalties shall be withheld from progress payments then due. A contractor is not subject to a penalty assessment pursuant to this section due to the failure of a subcontractor to comply with this section.
(i) The body awarding the contract shall cause to be inserted in the contract stipulations to effectuate this section.
(j) The director shall adopt rules consistent with the California Public Records Act (Chapter 3.5 (commencing with Section 6250) of Division 7 of Title 1 of the Government Code) and the Information Practices Act of 1977 (Title 1.8 (commencing with Section 1798) of Part 4 of Division 3 of the Civil Code) governing the release of these records, including the establishment of reasonable fees to be charged for reproducing copies of records required by this section.
(Amended by Stats. 2014, Ch. 28, Sec. 71. Effective June 20, 2014.)

1777.5
(a) This chapter does not prevent the employment of properly registered apprentices upon public works.
(b) (1) Every apprentice employed upon public works shall be paid the prevailing rate of per diem wages for apprentices in the trade to which he or she is registered and shall be employed only at the work of the craft or trade to which he or she is registered.
(2) Unless otherwise provided by a collective bargaining agreement, when a contractor requests the dispatch of an apprentice pursuant to this section to perform work on a public works project and requires

the apprentice to fill out an application or undergo testing, training, an examination, or other preemployment process as a condition of employment, the apprentice shall be paid for the time spent on the required preemployment activity, including travel time to and from the required activity, if any, at the prevailing rate of per diem wages for apprentices in the trade to which he or she is registered. Unless otherwise provided by a collective bargaining agreement, a contractor is not required to compensate an apprentice for the time spent on preemployment activities if the apprentice is required to take a preemployment drug or alcohol test and he or she fails to pass that test.

(c) Only apprentices, as defined in Section 3077, who are in training under apprenticeship standards that have been approved by the Chief of the Division of Apprenticeship Standards and who are parties to written apprentice agreements under Chapter 4 (commencing with Section 3070) of Division 3 are eligible to be employed at the apprentice wage rate on public works. The employment and training of each apprentice shall be in accordance with either of the following:

(1) The apprenticeship standards and apprentice agreements under which he or she is training.

(2) The rules and regulations of the California Apprenticeship Council.

(d) If the contractor to whom the contract is awarded by the state or any political subdivision, in performing any of the work under the contract, employs workers in any apprenticeable craft or trade, the contractor shall employ apprentices in at least the ratio set forth in this section and may apply to any apprenticeship program in the craft or trade that can provide apprentices to the site of the public work for a certificate approving the contractor under the apprenticeship standards for the employment and training of apprentices in the area or industry affected. However, the decision of the apprenticeship program to approve or deny a certificate shall be subject to review by the Administrator of Apprenticeship. The apprenticeship program or programs, upon approving the contractor, shall arrange for the dispatch of apprentices to the contractor. A contractor covered by an apprenticeship program's standards shall not be required to submit any additional application in order to include additional public works contracts under that program. "Apprenticeable craft or trade," as used in this section, means a craft or trade determined as an apprenticeable occupation in accordance with rules and regulations prescribed by the California Apprenticeship Council. As used in this section, "contractor" includes any subcontractor under a contractor who performs any public works not excluded by subdivision (o).

(e) Before commencing work on a contract for public works, every contractor shall submit contract award information to an applicable apprenticeship program that can supply apprentices to the site of the public work. The information submitted shall include an estimate of journeyman hours to be performed under the contract, the number of apprentices proposed to be employed, and the approximate dates the apprentices would be employed. A copy of this information shall also be submitted to the awarding body, if requested by the awarding body. Within 60 days after concluding work on the contract, each contractor and subcontractor shall submit to the awarding body, if requested, and to the apprenticeship program a verified statement of the journeyman and apprentice hours performed on the contract. The information under this subdivision shall be public. The apprenticeship programs shall retain this information for 12 months.

(f) The apprenticeship program supplying apprentices to the area of the site of the public work shall ensure equal employment and affirmative action in apprenticeship for women and minorities.

(g) The ratio of work performed by apprentices to journeymen employed in a particular craft or trade on the public work may be no higher than the ratio stipulated in the apprenticeship standards under which the apprenticeship program operates if the contractor agrees to be bound by those standards. However, except as otherwise provided in this section, in no case shall the ratio be less than one hour of apprentice work for every five hours of journeyman work.

(h) This ratio of apprentice work to journeyman work shall apply during any day or portion of a day when any journeyman is employed at the jobsite and shall be computed on the basis of the hours worked during the day by journeymen so employed. Any work performed by a journeyman in excess of eight hours per day or 40 hours per week shall not be used to calculate the ratio. The contractor shall employ apprentices for the number of hours computed as above before the end of the contract or, in the case of a subcontractor, before the end of the subcontract. However, the contractor shall endeavor, to the

greatest extent possible, to employ apprentices during the same time period that the journeymen in the same craft or trade are employed at the jobsite. When an hourly apprenticeship ratio is not feasible for a particular craft or trade, the Administrator of Apprenticeship, upon application of an apprenticeship program, may order a minimum ratio of not less than one apprentice for each five journeymen in a craft or trade classification.

(i) A contractor covered by this section who has agreed to be covered by an apprenticeship program's standards upon the issuance of the approval certificate, or who has been previously approved for an apprenticeship program in the craft or trade, shall employ the number of apprentices or the ratio of apprentices to journeymen stipulated in the applicable apprenticeship standards, but in no event less than the 1-to-5 ratio required by subdivision (g).

(j) Upon proper showing by a contractor that he or she employs apprentices in a particular craft or trade in the state on all of his or her contracts on an annual average of not less than one hour of apprentice work for every five hours of labor performed by journeymen, the Administrator of Apprenticeship may grant a certificate exempting the contractor from the 1-to-5 hourly ratio, as set forth in this section for that craft or trade.

(k) An apprenticeship program has the discretion to grant to a participating contractor or contractor association a certificate, which shall be subject to the approval of the Administrator of Apprenticeship, exempting the contractor from the 1-to-5 ratio set forth in this section when it finds that any one of the following conditions is met:

(1) Unemployment for the previous three-month period in the area exceeds an average of 15 percent.

(2) The number of apprentices in training in the area exceeds a ratio of 1 to 5.

(3) There is a showing that the apprenticeable craft or trade is replacing at least one-thirtieth of its journeymen annually through apprenticeship training, either on a statewide basis or on a local basis.

(4) Assignment of an apprentice to any work performed under a public works contract would create a condition that would jeopardize his or her life or the life, safety, or property of fellow employees or the public at large, or the specific task to which the apprentice is to be assigned is of a nature that training cannot be provided by a journeyman.

(l) If an exemption is granted pursuant to subdivision (k) to an organization that represents contractors in a specific trade from the 1-to-5 ratio on a local or statewide basis, the member contractors shall not be required to submit individual applications for approval to local joint apprenticeship committees, if they are already covered by the local apprenticeship standards.

(m) (1) A contractor to whom a contract is awarded, who, in performing any of the work under the contract, employs journeymen or apprentices in any apprenticeable craft or trade shall contribute to the California Apprenticeship Council the same amount that the director determines is the prevailing amount of apprenticeship training contributions in the area of the public works site. A contractor may take as a credit for payments to the council any amounts paid by the contractor to an approved apprenticeship program that can supply apprentices to the site of the public works project. The contractor may add the amount of the contributions in computing his or her bid for the contract.

(2) At the conclusion of the 2002–03 fiscal year and each fiscal year thereafter, the California Apprenticeship Council shall distribute training contributions received by the council under this subdivision, less the expenses of the Department of Industrial Relations for administering this subdivision, by making grants to approved apprenticeship programs for the purpose of training apprentices. The funds shall be distributed as follows:

(A) If there is an approved multiemployer apprenticeship program serving the same craft or trade and geographic area for which the training contributions were made to the council, a grant to that program shall be made.

(B) If there are two or more approved multiemployer apprenticeship programs serving the same craft or trade and county for which the training contributions were made to the council, the grant shall be divided among those programs based on the number of apprentices from that county registered in each program.

(C) All training contributions not distributed under subparagraphs (A) and (B) shall be used to defray

the future expenses of the Department of Industrial Relations for the administration and enforcement of apprenticeship standards and requirements under this code.
(3) All training contributions received pursuant to this subdivision shall be deposited in the Apprenticeship Training Contribution Fund, which is hereby created in the State Treasury. Upon appropriation by the Legislature, all moneys in the Apprenticeship Training Contribution Fund shall be used for the purpose of carrying out this subdivision and to pay the expenses of the Department of Industrial Relations.
(n) The body awarding the contract shall cause to be inserted in the contract stipulations to effectuate this section. The stipulations shall fix the responsibility of compliance with this section for all apprenticeable occupations with the prime contractor.
(o) This section does not apply to contracts of general contractors or to contracts of specialty contractors not bidding for work through a general or prime contractor when the contracts of general contractors or those specialty contractors involve less than thirty thousand dollars ($30,000).
(p) An awarding body that implements an approved labor compliance program in accordance with subdivision (b) of Section 1771.5 may, with the approval of the director, assist in the enforcement of this section under the terms and conditions prescribed by the director.
(Amended by Stats. 2016, Ch. 746, Sec. 1. Effective January 1, 2017.)

1813. The contractor or subcontractor shall, as a penalty to the state or political subdivision on whose behalf the contract is made or awarded, forfeit twenty-five dollars ($25) for each worker employed in the execution of the contract by the respective contractor or subcontractor for each calendar day during which the worker is required or permitted to work more than 8 hours in any one calendar day and 40 hours in any one calendar week in violation of the provisions of this article. In awarding any contract for public work, the awarding body shall cause to be inserted in the contract a stipulation to this effect. The awarding body shall take cognizance of all violations of this article committed in the course of the execution of the contract, and shall report them to the Division of Labor Standards Enforcement.

1815. Notwithstanding the provisions of Sections 1810 to 1814, inclusive, of this code, and notwithstanding any stipulation inserted in any contract pursuant to the requirements of said sections, work performed by employees of contractors in excess of 8 hours per day, and 40 hours during any one week, shall be permitted upon public work upon compensation for all hours worked in excess of 8 hours per day at not less than 1 1/2 times the basic rate of pay.

10.1 FEDERAL-AID CONTRACT LANGUAGE (EXHIBIT 12-G CALTRANS LOCAL ASSISTANCE)

(For Local Assistance Construction Projects)

The following language must be incorporated into all Local Assistance Federal-aid construction contracts. The following language, with minor edits, was taken from the Code of Federal Regulations.

MAINTAIN RECORDS AND SUBMIT REPORTS DOCUMENTING YOUR PERFORMANCE UNDER THIS SECTION

1. DISADVANTAGED BUSINESS ENTERPRISES (DBE)…….....2
   - A. DBE COMMITMENT SUBMITTAL……....1
   - B. GOOD FAITH EFFORTS SUBMITTAL……..1
   - C. EXHIBIT 15-G - CONSTRUCTION CONTRACT DBE COMMITMENT……..2
   - D. SUBCONTRACTOR AND DISADVANTAGED BUSINESS ENTERPRISE RECORDS……..2
   - E. PERFORMANCE OF DISADVANTAGED BUSINESS ENTERPRISES…….3
2. BID OPENING…….……...3
3. BID RIGGING…….…....3
4. CONTRACT AWARD…….……...4
5. CONTRACTOR LICENSE…….…...4
6. CHANGED CONDITIONS…….……...4
   - A. DIFFERING SITE CONDITION……....4
   - B. SUSPENSIONS OF WORK ORDERED BY THE ENGINEER……..4
   - C. SIGNIFICANT CHANGES IN THE CHARACTER OF WORK……...4
7. BEGINNING OF WORK, TIME OF COMPLETION AND LIQUIDATED DAMAGES…….……..5
8. BUY AMERICA…….……..5

FURNISH STEEL AND IRON MATERIALS TO BE INCORPORATED INTO THE WORK WITH CERTIFICATES OF COMPLIANCE. STEEL AND IRON MATERIALS MUST BE PRODUCED IN THE U.S. EXCEPT.…….……..5

9. QUALITY ASSURANCE…….……...5
10. PROMPT PAYMENT OF FUNDS WITHHELD TO SUBCONTRACTORS…….……..5
11. FORM FHWA-1273 REQUIRED CONTRACT PROVISIONS FEDERAL-AID CONTRACTS……....6
12. FEMALE AND MINORITY GOALS……...…18
13. TITLE VI ASSURANCE…….…...…...20
14. USE OF UNITED STATES-FLAG VESSELS (CARGO PREFERENCE ACT)…….…...21
15. FEDERAL TRAINEE PROGRAM…...…….…….22

1. DISADVANTAGED BUSINESS ENTERPRISES (DBE)

Under 49 CFR 26.13(b):

The contractor, subrecipient or subcontractor shall not discriminate on the basis of race, color, national origin, or sex in the performance of this contract. The contractor shall carry out applicable requirements of 49 CFR part 26 in the award and administration of DOT-assisted contracts. Failure by the contractor to carry out these requirements is a material breach of this contract, which may result in the termination of this contract or such other remedy as the recipient deems appropriate.

Take necessary and reasonable steps to ensure that DBEs have opportunity to participate in the contract (49 CFR 26).

To ensure equal participation of DBEs provided in 49 CFR 26.5, the Agency shows a goal for DBEs.

Make work available to DBEs and select work parts consistent with available DBE subcontractors and suppliers.

Meet the DBE goal shown elsewhere in these special provisions or demonstrate that you made adequate good faith efforts to meet this goal.

It is your responsibility to verify that the DBE firm is certified as DBE at date of bid opening. For a list of DBEs certified by the California Unified Certification Program, go to: http://www.dot.ca.gov/hq/bep/find_certified.htm.

All DBE participation will count toward the California Department of Transportation's federally mandated statewide overall DBE goal.

Credit for materials or supplies you purchase from DBEs counts towards the goal in the following manner:

- 100 percent counts if the materials or supplies are obtained from a DBE manufacturer.
- 60 percent counts if the materials or supplies are obtained from a DBE regular dealer.
- Only fees, commissions, and charges for assistance in the procurement and delivery of materials or supplies count if obtained from a DBE that is neither a manufacturer nor regular dealer. 49 CFR 26.55 defines "manufacturer" and "regular dealer."

You receive credit towards the goal if you employ a DBE trucking company that performs a commercially useful function as defined in 49 CFR 26.55(d)(1) through (4) and (6).

DBE Commitment Submittal

Submit the Exhibit 15-G *Construction Contract DBE Commitment* form, included in the Bid book. If the form is not submitted with the bid, remove the form from the Bid book before submitting your bid.

If the DBE Commitment form is not submitted with the bid, the apparent low bidder, the 2nd low bidder, and the 3rd low bidder must complete and submit the DBE Commitment form to the Agency. DBE Commitment form must be received by the Agency no later than 4:00 p.m. on the 5th calendar day after bid opening.

Other bidders do not need to submit the DBE Commitment form unless the Agency requests it. If the Agency requests you to submit a DBE Commitment form, submit the completed form within 5 calendar days of the request.

Submit written confirmation from each DBE stating that it is participating in the contract. Include confirmation with the DBE Commitment form. A copy of a DBE's quote will serve as written confirmation that the DBE is participating in the contract.

If you do not submit the DBE Commitment form within the specified time, the Agency will find your bid nonresponsive.

Good Faith Efforts Submittal

If you have not met the DBE goal, complete and submit the DBE Information - Good Faith Efforts, Exhibit 15-H, form with the bid showing that you made adequate good faith efforts to meet the goal. Only good faith efforts directed towards obtaining participation by DBEs will be considered. If good faith efforts documentation is not submitted with the bid, it must be received by the Agency no later than 4:00 p.m. on the 5th calendar day after bid opening.

If your DBE Commitment form shows that you have met the DBE goal or if you are required to submit the DBE Commitment form, you must also submit good faith efforts documentation within the specified time to protect your eligibility for award of the contract in the event the Agency finds that the DBE goal has not been met.

Good faith efforts documentation must include the following information and supporting documents, as necessary:

1. Items of work you have made available to DBE firms. Identify those items of work you might otherwise perform with your own forces and those items that have been broken down into economically feasible units to facilitate DBE participation. For each item listed, show the dollar value

and percentage of the total contract. It is your responsibility to demonstrate that sufficient work to meet the goal was made available to DBE firms.

2. Names of certified DBEs and dates on which they were solicited to bid on the project. Include the items of work offered. Describe the methods used for following up initial solicitations to determine with certainty if the DBEs were interested, and the dates of the follow-up. Attach supporting documents such as copies of letters, memos, facsimiles sent, telephone logs, telephone billing statements, and other evidence of solicitation. You are reminded to solicit certified DBEs through all reasonable and available means and provide sufficient time to allow DBEs to respond.
3. Name of selected firm and its status as a DBE for each item of work made available. Include name, address, and telephone number of each DBE that provided a quote and their price quote. If the firm selected for the item is not a DBE, provide the reasons for the selection.
4. Name and date of each publication in which you requested DBE participation for the project. Attach copies of the published advertisements.
5. Names of agencies and dates on which they were contacted to provide assistance in contacting, recruiting, and using DBE firms. If the agencies were contacted in writing, provide copies of supporting documents.
6. List of efforts made to provide interested DBEs with adequate information about the plans, specifications, and requirements of the contract to assist them in responding to a solicitation. If you have provided information, identify the name of the DBE assisted, the nature of the information provided, and date of contact. Provide copies of supporting documents, as appropriate.
7. List of efforts made to assist interested DBEs in obtaining bonding, lines of credit, insurance, necessary equipment, supplies, and materials, excluding supplies and equipment that the DBE subcontractor purchases or leases from the prime contractor or its affiliate. If such assistance is provided by you, identify the name of the DBE assisted, nature of the assistance offered, and date assistance was provided. Provide copies of supporting documents, as appropriate.
8. Any additional data to support demonstration of good faith efforts.

The Agency may consider DBE commitments of the 2nd and 3rd bidders when determining whether the low bidder made good faith efforts to meet the DBE goal.

Exhibit 15-G - Construction Contract DBE Commitment

Complete and sign Exhibit 15-G *Construction Contract DBE Commitment* included in the contract documents regardless of whether DBE participation is reported.

Provide written confirmation from each DBE that the DBE is participating in the Contract. A copy of a DBE's quote serves as written confirmation. If a DBE is participating as a joint venture partner, the Agency encourages you to submit a copy of the joint venture agreement.)

Subcontractor and Disadvantaged Business Enterprise Records

Use each DBE subcontractor as listed on Exhibit 12-B *Bidder's List of Subcontractors (DBE and Non-DBE)* and Exhibit 15-G *Construction Contract DBE Commitment* form unless you receive authorization for a substitution.

The Agency requests the Contractor to:

1. Notify the Engineer of any changes to its anticipated DBE participation
2. Provide this notification before starting the affected work
3. Maintain records including:

- Name and business address of each 1st-tier subcontractor
- Name and business address of each DBE subcontractor, DBE vendor, and DBE trucking company, regardless of tier
- Date of payment and total amount paid to each business

If you are a DBE contractor, include the date of work performed by your own forces and the corresponding value of the work.

Before the 15th of each month, submit a Monthly DBE Trucking Verification form.

If a DBE is decertified before completing its work, the DBE must notify you in writing of the decertification date. If a business becomes a certified DBE before completing its work, the business must notify you in writing of the certification date. Submit the notifications. On work completion, complete a Disadvantaged Business Enterprises (DBE) Certification Status Change, Exhibit 17-O, form. Submit the form within 30 days of contract acceptance.

Upon work completion, complete Exhibit 17-F *Final Report – Utilization of Disadvantaged Business Enterprises (DBE), First-Tier Subcontractors*. Submit it within 90 days of contract acceptance. The Agency will withhold $10,000 until the form is submitted. The Agency releases the withhold upon submission of the completed form.

Performance of Disadvantaged Business Enterprises

DBEs must perform work or supply materials as listed in the Exhibit 15-G *Construction Contract DBE Commitment* form, included in the Bid.

Do not terminate or substitute a listed DBE for convenience and perform the work with your own forces or obtain materials from other sources without authorization from the Agency.

The Agency authorizes a request to use other forces or sources of materials if it shows any of the following justifications:

1. Listed DBE fails or refuses to execute a written contract based on plans and specifications for the project.
2. You stipulated that a bond is a condition of executing the subcontract and the listed DBE fails to meet your bond requirements.
3. Work requires a contractor's license and listed DBE does not have a valid license under Contractors License Law.
4. Listed DBE fails or refuses to perform the work or furnish the listed materials.
5. Listed DBE's work is unsatisfactory and not in compliance with the contract.
6. Listed DBE is ineligible to work on the project because of suspension or debarment.
7. Listed DBE becomes bankrupt or insolvent.
8. Listed DBE voluntarily withdraws with written notice from the Contract
9. Listed DBE is ineligible to receive credit for the type of work required.
10. Listed DBE owner dies or becomes disabled resulting in the inability to perform the work on the Contract.
11. Agency determines other documented good cause.

Notify the original DBE of your intent to use other forces or material sources and provide the reasons. Provide the DBE with 5 days to respond to your notice and advise you and the Agency of the reasons why the use of other forces or sources of materials should not occur. Your request to use other forces or material sources must include:

1. One or more of the reasons listed in the preceding paragraph.
2. Notices from you to the DBE regarding the request.
3. Notices from the DBEs to you regarding the request.

If a listed DBE is terminated or substituted, you must make good faith efforts to find another DBE to substitute for the original DBE. The substitute DBE must perform at least the same amount of work as the original DBE under the contract to the extent needed to meet the DBE goal.

The substitute DBE must be certified as a DBE at the time of request for substitution Unless the Agency authorizes (1) a request to use other forces or sources of materials or (2) a good faith effort for a substitution of a terminated DBE, the Agency does not pay for work listed on the Exhibit 15-G *Construction Contract* DBE *Commitment* form unless it is performed or supplied by the listed DBE or an authorized substitute.

2. BID OPENING The Agency publicly opens and reads bids at the time and place shown on the *Notice to Contractors*.

3. BID RIGGING The U.S. Department of Transportation (DOT) provides a toll-free hotline to report bid rigging activities. Use the hotline to report bid rigging, bidder collusion, and other fraudulent activities. The hotline number is (800) 424-9071. The service is available 24 hours 7 days a week and is confidential and anonymous.. The hotline is part

of the DOT's effort to identify and investigate highway construction contract fraud and abuse and is operated under the direction of the DOT Inspector General.

4. **CONTRACT AWARD** If the Agency awards the contract, the award is made to the lowest responsible and responsive bidder.

5. **CONTRACTOR LICENSE**

The Contractor must be properly licensed as a contractor from contract award through Contract acceptance (Public Contract Code § 10164).

6. **CHANGED CONDITIONS**

a. Differing Site Conditions

1. During the progress of the work, if subsurface or latent physical conditions are encountered at the site differing materially from those indicated in the contract or if unknown physical conditions of an unusual nature, differing materially from those ordinarily encountered and generally recognized as inherent in the work provided for in the contract, are encountered at the site, the party discovering such conditions shall promptly notify the other party in writing of the specific differing conditions before the site is disturbed and before the affected work is performed.
2. Upon written notification, the engineer will investigate the conditions, and if it is determined that the conditions materially differ and cause an increase or decrease in the cost or time required for the performance of any work under the contract, an adjustment, excluding anticipated profits, will be made and the contract modified in writing accordingly. The engineer will notify the contractor of the determination whether or not an adjustment of the contract is warranted.
3. No contract adjustment which results in a benefit to the contractor will be allowed unless the contractor has provided the required written notice.
4. No contract adjustment will be allowed under this clause for any effects caused on unchanged work. (This provision may be omitted by the Local Agency, at their option.)

Suspensions of Work Ordered by the Engineer

1. If the performance of all or any portion of the work is suspended or delayed by the engineer in writing for an unreasonable period of time (not originally anticipated, customary, or inherent to the construction industry) and the contractor believes that additional compensation and/or contract time is due as a result of such suspension or delay, the contractor shall submit to the engineer in writing a request for adjustment within 7 calendar days of receipt of the notice to resume work. The request shall set forth the reasons and support for such adjustment.

2. Upon receipt, the engineer will evaluate the contractor's request. If the engineer agrees that the cost and/or time required for the performance of the contract has increased as a result of such suspension and the suspension was caused by conditions beyond the control of and not the fault of the contractor, its suppliers, or subcontractors at any approved tier, and not caused by weather, the engineer will make an adjustment (excluding profit) and modify the contract in writing

accordingly. The contractor will be notified of the engineer's determination whether or not an adjustment of the contract is warranted.

3. No contract adjustment will be allowed unless the contractor has submitted the request for adjustment within the time prescribed.

4. No contract adjustment will be allowed under this clause to the extent that performance would have been suspended or delayed by any other cause, or for which an adjustment is provided or excluded under any other term or condition of this contract.

Significant Changes in the Character of Work

1. The engineer reserves the right to make, in writing, at any time during the work, such changes in quantities and such alterations in the work as are necessary to satisfactorily complete the project. Such changes in quantities and alterations shall not invalidate the contract nor release the surety, and the contractor agrees to perform the work as altered.

2. If the alterations or changes in quantities significantly change the character of the work under the contract, whether such alterations or changes are in themselves significant changes to the character of the work or by affecting other work cause such other work to become significantly different in character, an adjustment, excluding anticipated profit, will be made to the contract. The basis for the adjustment shall be agreed upon prior to the performance of the work. If a basis cannot be agreed upon, then an adjustment will be made either for or against the contractor in such amount as the engineer may determine to be fair and equitable.

3. If the alterations or changes in quantities do not significantly change the character of the work to be performed under the contract, the altered work will be paid for as provided elsewhere in the contract.

4. The term "significant change" shall be construed to apply only to the following circumstances:

   - When the character of the work as altered differs materially in kind or nature from that involved or included in the original proposed construction; or
   - When a major item of work, as defined elsewhere in the contract, is increased in excess of 125 percent or decreased below 75 percent of the original contract quantity. Any allowance for an increase in quantity shall apply only to that portion in excess of 125 percent of original contract item quantity, or in case of a decrease below 75 percent, to the actual amount of work performed.

7. BEGINNING OF WORK, TIME OF COMPLETION AND LIQUIDATED DAMAGES

The Contractor shall begin work within 15 calendar days after the issuance of the Notice to Proceed.

This work shall be diligently prosecuted to completion before the expiration of TEN (10) WORKING DAYS beginning on the fifteenth calendar day after the date shown on the Notice to Proceed.

The Contractor shall pay to the City of Nevada City the sum of $500 per day, for each and every calendar days' delay in finishing the work in excess of the number of working days prescribed above.

8. BUY AMERICA

Furnish steel and iron materials to be incorporated into the work with certificates of compliance and certified mill test reports. Mill test reports must indicate where the steel and iron were melted and manufactured. Steel and iron materials must be produced in the U.S. except:

1. Foreign pig iron and processed, pelletized, and reduced iron ore may be used in the domestic production of the steel and iron materials [60 Fed Reg 15478 (03/24/1995)];
2. If the total combined cost of the materials does not exceed the greater of 0.1 percent of the total bid or $2,500, materials produced outside the U.S. may be used.

Production includes:

1. Processing steel and iron materials, including smelting or other processes that alter the physical form or shape (such as rolling, extruding, machining, bending, grinding, and drilling) or chemical composition;
2. Coating application, including epoxy coating, galvanizing, and painting, that protects or enhances the value of steel and iron materials.

9. QUALITY ASSURANCE

The Agency uses a Quality Assurance Program (QAP) to ensure a material is produced to comply with the Contract.

You may examine the records and reports of tests the Agency performs if they are available at the job site.

Schedule work to allow time for QAP.

10. PROMPT PAYMENT OF FUNDS WITHHELD TO SUBCONTRACTORS

The agency shall hold retainage from the prime contractor and shall make prompt and regular incremental acceptances of portions, as determined by the agency, of the contract work, and pay retainage to the prime contractor based on these acceptances. The prime contractor, or subcontractor, shall return all monies withheld in retention from a subcontractor within 30 days after receiving payment for work satisfactorily completed and accepted including incremental acceptances of portions of the contract work by the agency. Federal law (49CFR26.29) requires that any delay or

postponement of payment over 30 days may take place only for good cause and with the agency's prior written approval. Any violation of this provision shall subject the violating prime contractor or subcontractor to the penalties, sanctions and other remedies specified in Section 7108.5 of the Business and Professions Code. These requirements shall not be construed to limit or impair any contractual, administrative, or judicial remedies otherwise available to the prime contractor or subcontractor in the event of a dispute involving late payment or nonpayment by the prime contractor, deficient subcontract performance, or noncompliance by a subcontractor.

11. FORM FHWA-1273 REQUIRED CONTRACT PROVISIONS FEDERAL-AID CONTRACTS

(Excluding ATTACHMENT A - EMPLOYMENT AND MATERIALS PREFERENCE FOR APPALACHIAN DEVELOPMENT HIGHWAY SYSTEM OR APPALACHIAN LOCAL ACCESS ROAD CONTRACTS)

REQUIRED CONTRACT PROVISIONS
FEDERAL-AID CONSTRUCTION CONTRACTS

I. General
II. Nondiscrimination
III. Nonsegregated Facilities
IV. Davis-Bacon and Related Act Provisions
V. Contract Work Hours and Safety Standards Act Provisions
VI. Subletting or Assigning the Contract
VII. Safety: Accident Prevention
VIII. False Statements Concerning Highway Projects
IX. Implementation of Clean Air Act and Federal Water Pollution Control Act
X. Compliance with Governmentwide Suspension and Debarment Requirements
XI. Certification Regarding Use of Contract Funds for Lobbying

ATTACHMENTS

A. Employment and Materials Preference for Appalachian Development Highway System or Appalachian Local Access Road Contracts (included in Appalachian contracts only)

I. GENERAL

1. Form FHWA-1273 must be physically incorporated in each construction contract funded under Title 23 (excluding emergency contracts solely intended for debris removal). The contractor (or subcontractor) must insert this form in each subcontract and further require its inclusion in all lower tier subcontracts (excluding purchase orders, rental agreements and other agreements for supplies or services).

The applicable requirements of Form FHWA-1273 are incorporated by reference for work done under any purchase order, rental agreement or agreement for other services. The prime contractor shall be responsible for compliance by any subcontractor, lower-tier subcontractor or service provider.

Form FHWA-1273 must be included in all Federal-aid design-build contracts, in all subcontracts and in lower tier subcontracts (excluding subcontracts for design services, purchase orders, rental agreements and other agreements for supplies or services). The design-builder shall be responsible for compliance by any subcontractor, lower-tier subcontractor or service provider.

Contracting agencies may reference Form FHWA-1273 in bid proposal or request for proposal documents, however, the Form FHWA-1273 must be physically incorporated (not referenced) in all contracts, subcontracts and lower-tier subcontracts (excluding purchase orders, rental agreements and other agreements for supplies or services related to a construction contract).

2. Subject to the applicability criteria noted in the following sections, these contract provisions shall apply to all work performed on the contract by the contractor's own organization and with the assistance of workers under the contractor's immediate superintendence and to all work performed on the contract by piecework, station work, or by subcontract.

3. A breach of any of the stipulations contained in these Required Contract Provisions may be sufficient grounds for withholding of progress payments, withholding of final payment, termination of the contract, suspension / debarment or any other action determined to be appropriate by the contracting agency and FHWA.

4. Selection of Labor: During the performance of this contract, the contractor shall not use convict labor for any purpose within the limits of a construction project on a Federal-aid highway unless it is labor performed by convicts who are on parole, supervised release, or probation. The term Federal-aid highway does not include roadways functionally classified as local roads or rural minor collectors.

II. NONDISCRIMINATION

The provisions of this section related to 23 CFR Part 230 are applicable to all Federal-aid construction contracts and to all related construction subcontracts of $10,000 or more. The provisions of 23 CFR Part 230 are not applicable to material supply, engineering, or architectural service contracts.

In addition, the contractor and all subcontractors must comply with the following policies: Executive Order 11246, 41 CFR 60, 29 CFR 1625-1627, Title 23 USC Section 140, the Rehabilitation Act of 1973, as amended (29 USC 794), Title VI of the Civil Rights Act of 1964, as amended, and related regulations including 49 CFR Parts 21, 26 and 27; and 23 CFR Parts 200, 230, and 633.

The contractor and all subcontractors must comply with: the requirements of the Equal Opportunity Clause in 41 CFR 60-1.4(b) and, for all construction contracts exceeding $10,000, the Standard Federal Equal Employment Opportunity Construction Contract Specifications in 41 CFR 60-4.3.

Note: The U.S. Department of Labor has exclusive authority to determine compliance with Executive Order 11246 and the policies of the Secretary of Labor including 41 CFR 60, and 29 CFR 1625-1627. The contracting agency and the FHWA have the authority and the responsibility to ensure compliance with Title 23 USC Section 140, the Rehabilitation Act of 1973, as amended (29 USC 794), and Title VI of the Civil Rights Act of 1964, as amended, and related regulations including 49 CFR Parts 21, 26 and 27; and 23 CFR Parts 200, 230, and 633.

The following provision is adopted from 23 CFR 230, Appendix A, with appropriate revisions to conform to the U.S. Department of Labor (US DOL) and FHWA requirements.

1. Equal Employment Opportunity: Equal employment opportunity (EEO) requirements not to discriminate and to take affirmative action to assure equal opportunity as set forth under laws, executive orders, rules, regulations (28 CFR 35, 29 CFR 1630, 29 CFR 1625-1627, 41 CFR 60 and 49 CFR 27) and orders of the Secretary of Labor as modified by the provisions prescribed herein, and imposed pursuant to 23 U.S.C. 140 shall constitute the EEO and specific affirmative action standards for the contractor's project activities under this contract. The provisions of the Americans with Disabilities Act of 1990 (42 U.S.C. 12101 et seq.) set forth under 28 CFR 35 and 29 CFR 1630 are incorporated by reference in this contract. In the execution of this contract, the contractor agrees to comply with the following minimum specific requirement activities of EEO:

a. The contractor will work with the contracting agency and the Federal Government to ensure that it has made every good faith effort to provide equal opportunity with respect to all of its terms and conditions of employment and in their review of activities under the contract.

b. The contractor will accept as its operating policy the following statement:

> "It is the policy of this Company to assure that applicants are employed, and that employees are treated during employment, without regard to their race, religion, sex, color, national origin, age or disability. Such action shall include: employment, upgrading, demotion, or transfer; recruitment or recruitment advertising; layoff or termination; rates of pay or other forms of compensation; and selection for training, including apprenticeship, pre-apprenticeship, and/or on-the-job training."

2. EEO Officer: The contractor will designate and make known to the contracting officers an EEO Officer who will have the responsibility for and must be capable of effectively administering and promoting an active EEO program and who must be assigned adequate authority and responsibility to do so

3. Dissemination of Policy: All members of the contractor's staff who are authorized to hire, supervise, promote, and discharge employees, or who recommend such action, or who are substantially involved in such action, will be made fully cognizant of, and will implement, the contractor's EEO policy and contractual responsibilities to provide EEO in each grade and classification of employment. To ensure that the above agreement will be met, the following actions will be taken as a minimum:

a. Periodic meetings of supervisory and personnel office employees will be conducted before the start of work and then not less often than once every six months, at which time the contractor's EEO policy and its implementation will be reviewed and explained. The meetings will be conducted by the EEO Officer.

b. All new supervisory or personnel office employees will be given a thorough indoctrination by the EEO Officer, covering all major aspects of the contractor's EEO obligations within thirty days following their reporting for duty with the contractor.

c. All personnel who are engaged in direct recruitment for the project will be instructed by the EEO Officer in the contractor's procedures for locating and hiring minorities and women.

d. Notices and posters setting forth the contractor's EEO policy will be placed in areas readily accessible to employees, applicants for employment and potential employees.

e. The contractor's EEO policy and the procedures to implement such policy will be brought to the attention of employees by means of meetings, employee handbooks, or other appropriate means.

4. Recruitment: When advertising for employees, the contractor will include in all advertisements for employees the notation: "An Equal Opportunity Employer." All such advertisements will be placed in publications having a large circulation among minorities and women in the area from which the project work force would normally be derived.

a. The contractor will, unless precluded by a valid bargaining agreement, conduct systematic and direct recruitment through public and private employee referral sources likely to yield qualified minorities and women. To meet this requirement, the contractor will identify sources of potential minority group employees, and establish with such identified sources procedures whereby minority and women applicants may be referred to the contractor for employment consideration.

b. In the event the contractor has a valid bargaining agreement providing for exclusive hiring hall referrals, the contractor is expected to observe the provisions of that agreement to the extent that the system meets the contractor's compliance with EEO contract provisions. Where implementation of such an agreement has the effect of discriminating against minorities or women, or obligates the contractor to do the same, such implementation violates Federal nondiscrimination provisions.

c. The contractor will encourage its present employees to refer minorities and women as applicants for employment. Information and procedures with regard to referring such applicants will be discussed with employees.

5. Personnel Actions: Wages, working conditions, and employee benefits shall be established and administered, and personnel actions of every type, including hiring, upgrading, promotion, transfer, demotion, layoff, and termination, shall be taken without regard to race, color, religion, sex, national origin, age or disability. The following procedures shall be followed:

a. The contractor will conduct periodic inspections of project sites to insure that working conditions and employee facilities do not indicate discriminatory treatment of project site personnel.

b. The contractor will periodically evaluate the spread of wages paid within each classification to determine any evidence of discriminatory wage practices.

c. The contractor will periodically review selected personnel actions in depth to determine whether there is evidence of discrimination. Where evidence is found, the contractor will promptly take corrective action. If the review indicates that the discrimination may extend beyond the actions reviewed, such corrective action shall include all affected persons.

d. The contractor will promptly investigate all complaints of alleged discrimination made to the contractor in connection with its obligations under this contract, will attempt to resolve such complaints, and will take appropriate corrective action within a reasonable time. If the investigation indicates that the discrimination may affect persons other than the complainant, such corrective action shall include such other persons. Upon completion of each investigation, the contractor will inform every complainant of all of their avenues of appeal.

6. Training and Promotion:

a. The contractor will assist in locating, qualifying, and increasing the skills of minorities and women who are applicants for employment or current employees. Such efforts should be aimed at developing full journey level status employees in the type of trade or job classification involved.

b. Consistent with the contractor's work force requirements and as permissible under Federal and State regulations, the contractor shall make full use of training programs, i.e., apprenticeship, and on-the-job training programs for the geographical area of contract performance. In the event a special provision for training is provided under this contract, this subparagraph will be superseded as indicated in the special provision. The contracting agency may reserve training positions for persons who receive welfare assistance in accordance with 23 U.S.C. 140(a).

c. The contractor will advise employees and applicants for employment of available training programs and entrance requirements for each.

d. The contractor will periodically review the training and promotion potential of employees who are minorities and women and will encourage eligible employees to apply for such training and promotion.

7. Unions: If the contractor relies in whole or in part upon unions as a source of employees, the contractor will use good faith efforts to obtain the cooperation of such unions to increase opportunities for minorities and women. Actions by the contractor, either directly or through a contractor's association acting as agent, will include the procedures set forth below:

a. The contractor will use good faith efforts to develop, in cooperation with the unions, joint training programs aimed toward qualifying more minorities and women for membership in the unions and increasing the skills of minorities and women so that they may qualify for higher paying employment.

b. The contractor will use good faith efforts to incorporate an EEO clause into each union agreement to the end that such union will be contractually bound to refer applicants without regard to their race, color, religion, sex, national origin, age or disability.

c. The contractor is to obtain information as to the referral practices and policies of the labor union except that to the extent such information is within the exclusive possession of the labor union and such labor union refuses to furnish such information to the contractor, the contractor shall so certify to the contracting agency

and shall set forth what efforts have been made to obtain such information.

d. In the event the union is unable to provide the contractor with a reasonable flow of referrals within the time limit set forth in the collective bargaining agreement, the contractor will, through independent recruitment efforts, fill the employment vacancies without regard to race, color, religion, sex, national origin, age or disability; making full efforts to obtain qualified and/or qualifiable minorities and women. The failure of a union to provide sufficient referrals (even though it is obligated to provide exclusive referrals under the terms of a collective bargaining agreement) does not relieve the contractor from the requirements of this paragraph. In the event the union referral practice prevents the contractor from meeting the obligations pursuant to Executive Order 11246, as amended, and these special provisions, such contractor shall immediately notify the contracting agency.

8. Reasonable Accommodation for Applicants / Employees with Disabilities: The contractor must be familiar with the requirements for and comply with the Americans with Disabilities Act and all rules and regulations established there under. Employers must provide reasonable accommodation in all employment activities unless to do so would cause an undue hardship.

9. Selection of Subcontractors, Procurement of Materials and Leasing of Equipment: The contractor shall not discriminate on the grounds of race, color, religion, sex, national origin, age or disability in the selection and retention of subcontractors, including procurement of materials and leases of equipment. The contractor shall take all necessary and reasonable steps to ensure nondiscrimination in the administration of this contract.

a. The contractor shall notify all potential subcontractors and suppliers and lessors of their EEO obligations under this contract.

b. The contractor will use good faith efforts to ensure subcontractor compliance with their EEO obligations.

10. Assurance Required by 49 CFR 26.13(b):

a. The requirements of 49 CFR Part 26 and the State DOT's U.S. DOT-approved DBE program are incorporated by reference.

b. The contractor or subcontractor shall not discriminate on the basis of race, color, national origin, or sex in the performance of this contract. The contractor shall carry out applicable requirements of 49 CFR Part 26 in the award and administration of DOT-assisted contracts. Failure by the contractor to carry out these requirements is a material breach of this contract, which may result in the termination of this contract or such other remedy as the contracting agency deems appropriate.

11. Records and Reports: The contractor shall keep such records as necessary to document compliance with the EEO requirements. Such records shall be retained for a period of three years following the date of the final payment to the contractor for all contract work and shall be available at reasonable times and places for inspection by authorized representatives of the contracting agency and the FHWA.

a. The records kept by the contractor shall document the following:

(1) The number and work hours of minority and non-minority group members and women employed in each work classification on the project;

(2) The progress and efforts being made in cooperation with unions, when applicable, to increase employment opportunities for minorities and women; and

(3) The progress and efforts being made in locating, hiring, training, qualifying, and upgrading minorities and women;

b. The contractors and subcontractors will submit an annual report to the contracting agency each July for the duration of the project, indicating the number of minority, women, and non-minority group employees currently engaged in each work classification required by the contract work. This information is to be reported on Form FHWA-1391. The staffing data should represent the project work force on board in all or any part of the last payroll period preceding the end of July. If on-the-job training is being required by special provision, the contractor will be required to collect and report training data. The employment data should reflect the work force on board during all or any part of the last payroll period preceding the end of July.

III. NONSEGREGATED FACILITIES

This provision is applicable to all Federal-aid construction contracts and to all related construction subcontracts of $10,000 or more.

The contractor must ensure that facilities provided for employees are provided in such a manner that segregation on the basis of race, color, religion, sex, or national origin cannot result. The contractor may neither require such segregated use by written or oral policies nor tolerate such use by employee custom. The contractor's obligation extends further to ensure that its employees are not assigned to perform their services at any location, under the contractor's control, where the facilities are segregated. The term "facilities" includes waiting rooms, work areas, restaurants and other eating areas, time clocks, restrooms, washrooms, locker rooms, and other storage or dressing areas, parking lots, drinking fountains, recreation or entertainment areas, transportation, and housing provided for employees. The contractor shall provide separate or single-user restrooms and necessary dressing or sleeping areas to assure privacy between sexes.

IV. DAVIS-BACON AND RELATED ACT PROVISIONS

This section is applicable to all Federal-aid construction projects exceeding $2,000 and to all related subcontracts and lower-tier subcontracts (regardless of subcontract size). The requirements apply to all projects located within the right-of-way of a roadway that is functionally classified as Federal-aid highway. This excludes roadways functionally classified as local roads or rural minor collectors, which are exempt. Contracting agencies may elect to apply these requirements to other projects.

The following provisions are from the U.S. Department of Labor regulations in 29 CFR 5.5 "Contract provisions and related matters" with minor revisions to conform to the FHWA-1273 format and FHWA program requirements.

1. Minimum wages

a. All laborers and mechanics employed or working upon the site of the work, will be paid unconditionally and not less often than once a week, and without subsequent deduction or rebate on any account (except such payroll deductions as are permitted by regulations issued by the Secretary of Labor under the Copeland Act (29 CFR part 3)), the full amount of wages and bona fide fringe benefits (or cash equivalents thereof) due at time of payment computed at rates not less than those contained in the wage determination of the Secretary of Labor which is attached hereto and made a part hereof, regardless of any contractual relationship which may be alleged to exist between the contractor and such laborers and mechanics.

Contributions made or costs reasonably anticipated for bona fide fringe benefits under section 1(b)(2) of the Davis-Bacon Act on behalf of laborers or mechanics are considered wages paid to such laborers or mechanics, subject to the provisions of paragraph 1.d. of this section; also, regular contributions made or costs incurred for more than a weekly period (but not less often than quarterly) under plans, funds, or programs which cover the particular weekly period, are deemed to be constructively made or incurred during such weekly period. Such laborers and mechanics shall be paid the appropriate wage rate and fringe benefits on the wage determination for the classification of work actually performed, without regard to skill, except as provided in 29 CFR 5.5(a)(4). Laborers or mechanics performing work in more than one classification may be compensated at the rate specified for each classification for the time actually worked therein: Provided, That the employer's payroll records accurately set forth the time spent in each classification in which work is performed. The wage determination (including any additional classification and wage rates conformed under paragraph 1.b. of this section) and the Davis-Bacon poster (WH–1321) shall be posted at all times by the contractor and its subcontractors at the site of the work in a prominent and accessible place where it can be easily seen by the workers.

b. (1) The contracting officer shall require that any class of laborers or mechanics, including helpers, which is not listed in the wage determination and which is to be employed under the contract shall be classified in conformance with the wage determination. The contracting officer shall approve an additional classification and wage rate and fringe benefits therefore only when the following criteria have been met:

(i) The work to be performed by the classification requested is not performed by a classification in the wage determination; and

(ii) The classification is utilized in the area by the construction industry; and

(iii) The proposed wage rate, including any bona fide fringe benefits, bears a reasonable relationship to the wage rates contained in the wage determination.

(2) If the contractor and the laborers and mechanics to be employed in the classification (if known), or their representatives, and the contracting officer agree on the classification and wage rate (including the amount designated for fringe benefits where appropriate), a report of the action taken shall be sent by the contracting officer to the Administrator of the Wage and Hour Division, Employment Standards Administration, U.S. Department of Labor, Washington, DC 20210. The Administrator, or an authorized representative, will approve, modify, or disapprove every additional classification action within 30 days of receipt and so advise the contracting officer or will notify the contracting officer within the 30-day period that additional time is necessary.

(3) In the event the contractor, the laborers or mechanics to be employed in the classification or their representatives, and the contracting officer do not agree on the proposed classification and wage rate (including the amount designated for fringe benefits, where appropriate), the contracting officer shall refer the questions, including the views of all interested parties and the recommendation of the contracting officer, to the Wage and Hour Administrator for determination. The Wage and Hour Administrator, or an authorized representative, will issue a determination within 30 days of receipt and so advise the contracting officer or will notify the contracting officer within the 30-day period that additional time is necessary.

(4) The wage rate (including fringe benefits where appropriate) determined pursuant to paragraphs 1.b.(2) or 1.b.(3) of this section, shall be paid to all workers performing work in the classification under this contract from the first day on which work is performed in the classification.

c. Whenever the minimum wage rate prescribed in the contract for a class of laborers or mechanics includes a fringe benefit which is not expressed as an hourly rate, the contractor shall either pay the benefit as stated in the wage determination or shall pay another bona fide fringe benefit or an hourly cash equivalent thereof.

d. If the contractor does not make payments to a trustee or other third person, the contractor may consider as part of the wages of any laborer or mechanic the amount of any costs reasonably anticipated in providing bona fide fringe benefits under a plan or program, Provided, That the Secretary of Labor has found, upon the written request of the contractor, that the applicable standards of the Davis-Bacon Act have been met. The Secretary of Labor may require the contractor to set aside in a separate account assets for the meeting of obligations under the plan or program.

2. Withholding

The contracting agency shall upon its own action or upon written request of an authorized representative of the Department of Labor, withhold or cause to be withheld from the contractor under this contract, or any other Federal contract with the same prime contractor, or any other federally-assisted contract subject to Davis-Bacon prevailing wage requirements, which is held by the same prime contractor, so much of the accrued payments or advances as may be considered necessary to pay laborers and mechanics, including apprentices, trainees, and helpers, employed by the contractor or any subcontractor the full amount of wages required by the contract. In the event of failure to pay any laborer or mechanic, including any apprentice, trainee, or helper, employed or working on the site of the work, all or part of the wages required by the contract, the contracting agency may, after written notice to the contractor, take such action as may be necessary to cause the suspension of any further payment, advance, or guarantee of funds until such violations have ceased.

3. Payrolls and basic records

a. Payrolls and basic records relating thereto shall be maintained by the contractor during the course of the work and preserved for a period of three years thereafter for all laborers and mechanics working at the site of the work. Such records shall contain the name, address, and social security number of each such worker, his or her correct classification, hourly rates of wages paid (including rates of contributions or costs anticipated for bona fide fringe benefits or cash equivalents thereof of the types described in section 1(b)(2)(B) of the Davis-Bacon Act), daily and weekly number of hours worked, deductions made and actual wages paid. Whenever the Secretary of Labor has found under 29 CFR 5.5(a)(1)(iv) that the wages of any laborer or mechanic include the amount of any costs reasonably anticipated in providing benefits under a plan or program described in section 1(b)(2)(B) of the Davis-Bacon Act, the contractor shall maintain records which show that the commitment to provide such benefits is enforceable, that the plan or program is financially responsible, and that the plan or program has been communicated in writing to the laborers or mechanics affected, and records which show the costs anticipated or the actual cost incurred in providing such benefits. Contractors employing apprentices or trainees under approved programs shall maintain written evidence of the registration of apprenticeship programs and certification of trainee programs, the registration of the apprentices and trainees, and the ratios and wage rates prescribed in the applicable programs.

b. (1) The contractor shall submit weekly for each week in which any contract work is performed a copy of all payrolls to the contracting agency. The payrolls submitted shall set out accurately and completely all of the information required to be maintained under 29 CFR 5.5(a)(3)(i), except that full social security numbers and home addresses shall not be included on weekly transmittals. Instead the payrolls shall only need to include an individually identifying number for each employee (e.g. , the last four digits of the employee's social security number). The required weekly payroll information may be submitted in any form desired. Optional Form WH–347 is available for this purpose from the Wage and Hour Division Web site at http://www.dol.gov/esa/whd/forms/wh347instr.htm or its successor site. The prime contractor is responsible for the submission of copies of payrolls by all subcontractors. Contractors and subcontractors shall maintain the full social security number and current address of each covered worker, and shall provide them upon request to the contracting agency for transmission to the State DOT, the FHWA or the Wage and Hour Division of the Department of Labor for purposes of an investigation or audit of compliance with prevailing wage requirements. It is not a violation of this section for a prime contractor to require a subcontractor to provide addresses and social security numbers to the prime contractor for its own records, without weekly submission to the contracting agency..

(2) Each payroll submitted shall be accompanied by a “Statement of Compliance,” signed by the contractor or subcontractor or his or her agent who pays or supervises the payment of the persons employed under the contract and shall certify the following:

(i) That the payroll for the payroll period contains the information required to be provided under §5.5 (a)(3)(ii) of Regulations, 29 CFR part 5, the appropriate information is being maintained under §5.5 (a)(3)(i) of Regulations, 29 CFR part 5, and that such information is correct and complete;

(ii) That each laborer or mechanic (including each helper, apprentice, and trainee) employed on the contract during the payroll period has been paid the full weekly wages earned, without rebate, either directly or indirectly, and that no deductions have been made either directly or indirectly from the full wages earned, other than permissible deductions as set forth in Regulations, 29 CFR part 3;

(iii) That each laborer or mechanic has been paid not less than the applicable wage rates and fringe benefits or cash equivalents for the classification of work performed, as specified in the applicable wage determination incorporated into the contract.

(3) The weekly submission of a properly executed certification set forth on the reverse side of Optional Form WH–347 shall satisfy the requirement for submission of the “Statement of Compliance” required by paragraph 3.b.(2) of this section.

(4) The falsification of any of the above certifications may subject the contractor or subcontractor to civil or criminal prosecution under section 1001 of title 18 and section 231 of title 31 of the United States Code.

c. The contractor or subcontractor shall make the records required under paragraph 3.a. of this section available for inspection, copying, or transcription by authorized representatives of the contracting agency, the State DOT, the FHWA, or the Department of Labor, and shall permit such representatives to interview employees during working hours on the job. If the contractor or subcontractor fails to submit the required records or to make them available, the FHWA may, after written notice to the contractor, the contracting agency or the State DOT, take such action as may be necessary to cause the suspension of any further payment, advance, or guarantee of funds. Furthermore, failure to submit the required records upon request or to make such records available may be grounds for debarment action pursuant to 29 CFR 5.12.

4. Apprentices and trainees

a. Apprentices (programs of the USDOL).

Apprentices will be permitted to work at less than the predetermined rate for the work they performed when they are employed pursuant to and individually registered in a bona fide apprenticeship program registered with the U.S. Department of Labor, Employment and Training Administration, Office of Apprenticeship Training, Employer and Labor Services, or with a State Apprenticeship Agency recognized by the Office, or if a person is employed in his or her first 90 days of probationary employment as an apprentice in such an apprenticeship program, who is not individually registered in the program, but who has been certified by the Office of Apprenticeship Training, Employer and Labor Services or a State Apprenticeship Agency (where appropriate) to be eligible for probationary employment as an apprentice.

The allowable ratio of apprentices to journeymen on the job site in any craft classification shall not be greater than the ratio permitted to the contractor as to the entire work force under the registered program. Any worker listed on a payroll at an apprentice wage rate, who is not registered or otherwise employed as stated above, shall be paid not less than the applicable wage rate on the wage determination for the classification of work actually performed. In addition, any apprentice performing work on the job site in excess of the ratio permitted under the registered program shall be paid not less than the applicable wage rate on the wage determination for the work actually performed. Where a contractor is performing construction on a project in a locality other than that in which its program is registered, the ratios and wage rates (expressed in percentages of the journeyman's hourly rate) specified in the contractor's or subcontractor's registered program shall be observed.

Every apprentice must be paid at not less than the rate specified in the registered program for the apprentice's level of progress, expressed as a percentage of the journeymen hourly rate specified in the applicable wage determination. Apprentices shall be paid fringe benefits in accordance with the provisions of the apprenticeship program. If the apprenticeship program does not specify fringe benefits, apprentices must be paid the full amount of fringe benefits listed on the wage determination for the applicable classification. If the Administrator determines that a different practice prevails for the applicable apprentice classification, fringes shall be paid in accordance with that determination.

In the event the Office of Apprenticeship Training, Employer and Labor Services, or a State Apprenticeship Agency recognized by the Office, withdraws approval of an apprenticeship program, the contractor will no longer be permitted to utilize apprentices at less than the applicable predetermined rate for the work performed until an acceptable program is approved.

b. Trainees (programs of the USDOL).

Except as provided in 29 CFR 5.16, trainees will not be permitted to work at less than the predetermined rate for the work performed unless they are employed pursuant to and individually registered in

a program which has received prior approval, evidenced by formal certification by the U.S. Department of Labor, Employment and Training Administration.

The ratio of trainees to journeymen on the job site shall not be greater than permitted under the plan approved by the Employment and Training Administration.

Every trainee must be paid at not less than the rate specified in the approved program for the trainee's level of progress, expressed as a percentage of the journeyman hourly rate specified in the applicable wage determination. Trainees shall be paid fringe benefits in accordance with the provisions of the trainee program. If the trainee program does not mention fringe benefits, trainees shall be paid the full amount of fringe benefits listed on the wage determination unless the Administrator of the Wage and Hour Division determines that there is an apprenticeship program associated with the corresponding journeyman wage rate on the wage determination which provides for less than full fringe benefits for apprentices. Any employee listed on the payroll at a trainee rate who is not registered and participating in a training plan approved by the Employment and Training Administration shall be paid not less than the applicable wage rate on the wage determination for the classification of work actually performed. In addition, any trainee performing work on the job site in excess of the ratio permitted under the registered program shall be paid not less than the applicable wage rate on the wage determination for the work actually performed.

In the event the Employment and Training Administration withdraws approval of a training program, the contractor will no longer be permitted to utilize trainees at less than the applicable predetermined rate for the work performed until an acceptable program is approved.

c. Equal employment opportunity. The utilization of apprentices, trainees and journeymen under this part shall be in conformity with the equal employment opportunity requirements of Executive Order 11246, as amended, and 29 CFR part 30.

d. Apprentices and Trainees (programs of the U.S. DOT).

Apprentices and trainees working under apprenticeship and skill training programs which have been certified by the Secretary of Transportation as promoting EEO in connection with Federal-aid highway construction programs are not subject to the requirements of paragraph 4 of this Section IV. The straight time hourly wage rates for apprentices and trainees under such programs will be established by the particular programs. The ratio of apprentices and trainees to journeymen shall not be greater than permitted by the terms of the particular program.

5. Compliance with Copeland Act requirements. The contractor shall comply with the requirements of 29 CFR part 3, which are incorporated by reference in this contract.

6. Subcontracts. The contractor or subcontractor shall insert Form FHWA-1273 in any subcontracts and also require the subcontractors to include Form FHWA-1273 in any lower tier subcontracts. The prime contractor shall be responsible for the compliance by any subcontractor or lower tier subcontractor with all the contract clauses in 29 CFR 5.5.

7. Contract termination: debarment. A breach of the contract clauses in 29 CFR 5.5 may be grounds for termination of the contract, and for debarment as a contractor and a subcontractor as provided in 29 CFR 5.12.

8. Compliance with Davis-Bacon and Related Act requirements. All rulings and interpretations of the Davis-Bacon and Related Acts contained in 29 CFR parts 1, 3, and 5 are herein incorporated by reference in this contract.

9. Disputes concerning labor standards. Disputes arising out of the labor standards provisions of this contract shall not be subject to the general disputes clause of this contract. Such disputes shall be resolved in accordance with the procedures of the Department of Labor set forth in 29 CFR parts 5, 6, and 7. Disputes within the meaning of this clause include disputes between the contractor (or any of its subcontractors) and the contracting agency, the U.S. Department of Labor, or the employees or their representatives.

10. Certification of eligibility.

a. By entering into this contract, the contractor certifies that neither it (nor he or she) nor any person or firm who has an interest in the contractor's firm is a person or firm ineligible to be awarded Government contracts by virtue of section 3(a) of the Davis-Bacon Act or 29 CFR 5.12(a)(1).

b. No part of this contract shall be subcontracted to any person or firm ineligible for award of a Government contract by virtue of section 3(a) of the Davis-Bacon Act or 29 CFR 5.12(a)(1).

c. The penalty for making false statements is prescribed in the U.S. Criminal Code, 18 U.S.C. 1001.

V. CONTRACT WORK HOURS AND SAFETY STANDARDS ACT

The following clauses apply to any Federal-aid construction contract in an amount in excess of $100,000 and subject to the overtime provisions of the Contract Work Hours and Safety Standards Act. These clauses shall be inserted in addition to the clauses required by 29 CFR 5.5(a) or 29 CFR 4.6. As used in this paragraph, the terms laborers and mechanics include watchmen and guards.

1. Overtime requirements. No contractor or subcontractor contracting for any part of the contract work which may require or involve the employment of laborers or mechanics shall require or permit any such laborer or mechanic in any workweek in which he or she is employed on such work to work in excess of forty hours in such workweek unless such laborer or mechanic receives compensation at a rate not less than one and one-half times the basic rate of pay for all hours worked in excess of forty hours in such workweek.

2. Violation; liability for unpaid wages; liquidated damages. In the event of any violation of the clause set forth in paragraph (1.) of this section, the contractor and any subcontractor responsible therefor shall be liable for the unpaid wages. In addition, such contractor and subcontractor shall be liable to the United States (in the case of work done under contract for the District of Columbia or a territory, to such District or to such territory), for liquidated damages. Such liquidated damages shall be computed with respect to each individual laborer or mechanic, including watchmen and guards, employed in violation of the clause set forth in paragraph (1.) of this section, in the sum of $10 for each calendar day on which such individual was required or permitted to work in excess of the standard workweek of forty hours without payment of the overtime wages required by the clause set forth in paragraph (1.) of this section.

3. Withholding for unpaid wages and liquidated damages. The FHWA or the contacting agency shall upon its own action or upon written request of an authorized representative of the Department of Labor withhold or cause to be withheld, from any moneys payable on account of work performed by the contractor or subcontractor under any such contract or any other Federal contract with the same prime contractor, or any other federally-assisted contract subject to the Contract Work Hours and Safety Standards Act, which is held by the same prime contractor, such sums as may be determined to be necessary to satisfy any liabilities of such contractor or subcontractor for unpaid wages and liquidated damages as provided in the clause set forth in paragraph (2.) of this section.

4. Subcontracts. The contractor or subcontractor shall insert in any subcontracts the clauses set forth in paragraph (1.) through (4.) of this section and also a clause requiring the subcontractors to include these clauses in any lower tier subcontracts. The prime contractor shall be responsible for compliance by any subcontractor or lower tier subcontractor with the clauses set forth in paragraphs (1.) through (4.) of this section.

VI. SUBLETTING OR ASSIGNING THE CONTRACT

This provision is applicable to all Federal-aid construction contracts on the National Highway System.

1. The contractor shall perform with its own organization contract work amounting to not less than 30 percent (or a greater percentage if specified elsewhere in the contract) of the total original contract price, excluding any specialty items designated by the contracting agency. Specialty items may be performed by subcontract and the amount of any such specialty items performed may be deducted from the total original contract price before computing the amount of work required to be performed by the contractor's own organization (23 CFR 635.116).

a. The term “perform work with its own organization” refers to workers employed or leased by the prime contractor, and equipment owned or rented by the prime contractor, with or without operators. Such term does not include employees or equipment of a subcontractor or lower tier subcontractor, agents of the prime contractor, or any other assignees. The term may include payments for the costs of hiring leased employees from an employee leasing firm meeting all relevant Federal and State regulatory requirements. Leased employees may only be included in this term if the prime contractor meets all of the following conditions:

(1) the prime contractor maintains control over the supervision of the day-to-day activities of the leased employees;
(2) the prime contractor remains responsible for the quality of the work of the leased employees;
(3) the prime contractor retains all power to accept or exclude individual employees from work on the project; and
(4) the prime contractor remains ultimately responsible for the payment of predetermined minimum wages, the submission of payrolls, statements of compliance and all other Federal regulatory requirements.

b. "Specialty Items" shall be construed to be limited to work that requires highly specialized knowledge, abilities, or equipment not ordinarily available in the type of contracting organizations qualified and expected to bid or propose on the contract as a whole and in general are to be limited to minor components of the overall contract.

2. The contract amount upon which the requirements set forth in paragraph (1) of Section VI is computed includes the cost of material and manufactured products which are to be purchased or produced by the contractor under the contract provisions.

3. The contractor shall furnish (a) a competent superintendent or supervisor who is employed by the firm, has full authority to direct performance of the work in accordance with the contract requirements, and is in charge of all construction operations (regardless of who performs the work) and (b) such other of its own organizational resources (supervision, management, and engineering services) as the contracting officer determines is necessary to assure the performance of the contract.

4. No portion of the contract shall be sublet, assigned or otherwise disposed of except with the written consent of the contracting officer, or authorized representative, and such consent when given shall not be construed to relieve the contractor of any responsibility for the fulfillment of the contract. Written consent will be given only after the contracting agency has assured that each subcontract is evidenced in writing and that it contains all pertinent provisions and requirements of the prime contract.

5. The 30% self-performance requirement of paragraph (1) is not applicable to design-build contracts; however, contracting agencies may establish their own self-performance requirements.

VII. SAFETY: ACCIDENT PREVENTION

This provision is applicable to all Federal-aid construction contracts and to all related subcontracts.

1. In the performance of this contract the contractor shall comply with all applicable Federal, State, and local laws governing safety, health, and sanitation (23 CFR 635). The contractor shall provide all safeguards, safety devices and protective equipment and take any other needed actions as it determines, or as the contracting officer may determine, to be reasonably necessary to protect the life and health of employees on the job and the safety of the public and to protect property in connection with the performance of the work covered by the contract.

2. It is a condition of this contract, and shall be made a condition of each subcontract, which the contractor enters into pursuant to this contract, that the contractor and any subcontractor shall not permit any employee, in performance of the contract, to work in surroundings or under conditions which are unsanitary, hazardous or dangerous to his/her health or safety, as determined under construction safety and health standards (29 CFR 1926) promulgated by the Secretary of Labor, in accordance with Section 107 of the Contract Work Hours and Safety Standards Act (40 U.S.C. 3704).

3. Pursuant to 29 CFR 1926.3, it is a condition of this contract that the Secretary of Labor or authorized representative thereof, shall have right of entry to any site of contract performance to inspect or investigate the matter of compliance with the construction safety and health standards and to carry out the duties of the Secretary under Section 107 of the Contract Work Hours and Safety Standards Act (40 U.S.C.3704).

VIII. FALSE STATEMENTS CONCERNING HIGHWAY PROJECTS

This provision is applicable to all Federal-aid construction contracts and to all related subcontracts.

In order to assure high quality and durable construction in conformity with approved plans and specifications and a high degree of reliability on statements and representations made by engineers, contractors, suppliers, and workers on Federal-aid highway projects, it is essential that all persons concerned with the project perform their functions as carefully, thoroughly, and honestly as possible. Willful falsification, distortion, or misrepresentation with respect to any facts related to the project is a violation of Federal law. To prevent any misunderstanding regarding the seriousness of these

and similar acts, Form FHWA-1022 shall be posted on each Federal-aid highway project (23 CFR 635) in one or more places where it is readily available to all persons concerned with the project:

18 U.S.C. 1020 reads as follows:

"Whoever, being an officer, agent, or employee of the United States, or of any State or Territory, or whoever, whether a person, association, firm, or corporation, knowingly makes any false statement, false representation, or false report as to the character, quality, quantity, or cost of the material used or to be used, or the quantity or quality of the work performed or to be performed, or the cost thereof in connection with the submission of plans, maps, specifications, contracts, or costs of construction on any highway or related project submitted for approval to the Secretary of Transportation; or

Whoever knowingly makes any false statement, false representation, false report or false claim with respect to the character, quality, quantity, or cost of any work performed or to be performed, or materials furnished or to be furnished, in connection with the construction of any highway or related project approved by the Secretary of Transportation; or

Whoever knowingly makes any false statement or false representation as to material fact in any statement, certificate, or report submitted pursuant to provisions of the Federal-aid Roads Act approved July 1, 1916, (39 Stat. 355), as amended and supplemented;

Shall be fined under this title or imprisoned not more than 5 years or both."

IX. IMPLEMENTATION OF CLEAN AIR ACT AND FEDERAL WATER POLLUTION CONTROL ACT

This provision is applicable to all Federal-aid construction contracts and to all related subcontracts.

By submission of this bid/proposal or the execution of this contract, or subcontract, as appropriate, the bidder, proposer, Federal-aid construction contractor, or subcontractor, as appropriate, will be deemed to have stipulated as follows:

1. That any person who is or will be utilized in the performance of this contract is not prohibited from receiving an award due to a violation of Section 508 of the Clean Water Act or Section 306 of the Clean Air Act.
2. That the contractor agrees to include or cause to be included the requirements of paragraph (1) of this Section X in every subcontract, and further agrees to take such action as the contracting agency may direct as a means of enforcing such requirements.

X. CERTIFICATION REGARDING DEBARMENT, SUSPENSION, INELIGIBILITY AND VOLUNTARY EXCLUSION

This provision is applicable to all Federal-aid construction contracts, design-build contracts, subcontracts, lower-tier subcontracts, purchase orders, lease agreements, consultant contracts or any other covered transaction requiring FHWA approval or that is estimated to cost $25,000 or more – as defined in 2 CFR Parts 180 and 1200.

1**. Instructions for Certification – First Tier Participants:**

a. By signing and submitting this proposal, the prospective first tier participant is providing the certification set out below.

b. The inability of a person to provide the certification set out below will not necessarily result in denial of participation in this covered transaction. The prospective first tier participant shall submit an explanation of why it cannot provide the certification set out below. The certification or explanation will be considered in connection with the department or agency's determination whether to enter into this transaction. However, failure of the prospective first tier participant to furnish a certification or an explanation shall disqualify such a person from participation in this transaction.

c. The certification in this clause is a material representation of fact upon which reliance was placed when the contracting agency determined to enter into this transaction. If it is later determined that the prospective participant knowingly rendered an erroneous certification, in addition to other remedies available to the Federal Government, the contracting agency may terminate this transaction for cause of default.

d. The prospective first tier participant shall provide immediate written notice to the contracting agency to whom this proposal is submitted if any time the prospective first tier participant learns that its certification was erroneous when submitted or has become erroneous by reason of changed circumstances.

e. The terms "covered transaction," "debarred," "suspended," "ineligible," "participant," "person," "principal," and "voluntarily excluded," as used in this clause, are defined in 2 CFR Parts 180 and 1200. “First Tier Covered Transactions” refers to any covered transaction between a grantee or subgrantee of Federal funds and a participant (such as the prime or general contract). “Lower Tier Covered Transactions” refers to any covered transaction under a First Tier Covered Transaction (such as subcontracts). “First Tier Participant” refers to the participant who has entered into a covered transaction with a grantee or subgrantee of Federal funds (such as the prime or general contractor). “Lower Tier Participant” refers any participant who has entered into a covered transaction with a First Tier Participant or other Lower Tier Participants (such as subcontractors and suppliers).

f. The prospective first tier participant agrees by submitting this proposal that, should the proposed covered transaction be entered into, it shall not knowingly enter into any lower tier covered transaction with a person who is debarred, suspended, declared ineligible, or voluntarily excluded from participation in this covered transaction, unless authorized by the department or agency entering into this transaction.

g. The prospective first tier participant further agrees by submitting this proposal that it will include the clause titled "Certification Regarding Debarment, Suspension, Ineligibility and Voluntary Exclusion-Lower Tier Covered Transactions," provided by the department or contracting agency, entering into this covered transaction, without modification, in all lower tier covered transactions and in all solicitations for lower tier covered transactions exceeding the $25,000 threshold.

h. A participant in a covered transaction may rely upon a certification of a prospective participant in a lower tier covered transaction that is not debarred, suspended, ineligible, or voluntarily excluded from the covered transaction, unless it knows that the certification is erroneous. A participant is responsible for ensuring that its principals are not suspended, debarred, or otherwise ineligible to participate in covered transactions. To verify the eligibility of its principals, as well as the eligibility of any lower tier prospective participants, each participant may, but is not required to, check the Excluded Parties List System website (https://www.epls.gov/), which is compiled by the General Services Administration.

i. Nothing contained in the foregoing shall be construed to require the establishment of a system of records in order to render in good

faith the certification required by this clause. The knowledge and information of the prospective participant is not required to exceed that which is normally possessed by a prudent person in the ordinary course of business dealings.

j. Except for transactions authorized under paragraph (f) of these instructions, if a participant in a covered transaction knowingly enters into a lower tier covered transaction with a person who is suspended, debarred, ineligible, or voluntarily excluded from participation in this transaction, in addition to other remedies available to the Federal Government, the department or agency may terminate this transaction for cause or default.

* * * * *

2. Certification Regarding Debarment, Suspension, Ineligibility and Voluntary Exclusion – First Tier Participants:

a. The prospective first tier participant certifies to the best of its knowledge and belief, that it and its principals:

(1) Are not presently debarred, suspended, proposed for debarment, declared ineligible, or voluntarily excluded from participating in covered transactions by any Federal department or agency;

(2) Have not within a three-year period preceding this proposal been convicted of or had a civil judgment rendered against them for commission of fraud or a criminal offense in connection with obtaining, attempting to obtain, or performing a public (Federal, State or local) transaction or contract under a public transaction; violation of Federal or State antitrust statutes or commission of embezzlement, theft, forgery, bribery, falsification or destruction of records, making false statements, or receiving stolen property;

(3) Are not presently indicted for or otherwise criminally or civilly charged by a governmental entity (Federal, State or local) with commission of any of the offenses enumerated in paragraph (a)(2) of this certification; and

(4) Have not within a three-year period preceding this application/proposal had one or more public transactions (Federal, State or local) terminated for cause or default.

b. Where the prospective participant is unable to certify to any of the statements in this certification, such prospective participant shall attach an explanation to this proposal.

2. **Instructions for Certification - Lower Tier Participants:**

(Applicable to all subcontracts, purchase orders and other lower tier transactions requiring prior FHWA approval or estimated to cost $25,000 or more - 2 CFR Parts 180 and 1200)

a. By signing and submitting this proposal, the prospective lower tier is providing the certification set out below.

b. The certification in this clause is a material representation of fact upon which reliance was placed when this transaction was entered into. If it is later determined that the prospective lower tier participant knowingly rendered an erroneous certification, in addition to other remedies available to the Federal Government, the department, or agency with which this transaction originated may pursue available remedies, including suspension and/or debarment.

c. The prospective lower tier participant shall provide immediate written notice to the person to which this proposal is submitted if at any time the prospective lower tier participant learns that its certification was erroneous by reason of changed circumstances.

d. The terms "covered transaction," "debarred," "suspended," "ineligible," "participant," "person," "principal," and "voluntarily excluded," as used in this clause, are defined in 2 CFR Parts 180 and 1200. You may contact the person to which this proposal is submitted for assistance in obtaining a copy of those regulations. “First Tier Covered Transactions” refers to any covered transaction between a grantee or subgrantee of Federal funds and a participant (such as the prime or general contract). “Lower Tier Covered Transactions” refers to any covered transaction under a First Tier Covered Transaction (such as subcontracts). “First Tier Participant” refers to the participant who has entered into a covered transaction with a grantee or subgrantee of Federal funds (such as the prime or general contractor). “Lower Tier Participant” refers any participant who has entered into a covered transaction with a First Tier Participant or other Lower Tier Participants (such as subcontractors and suppliers).

e. The prospective lower tier participant agrees by submitting this proposal that, should the proposed covered transaction be entered into, it shall not knowingly enter into any lower tier covered transaction with a person who is debarred, suspended, declared ineligible, or voluntarily excluded from participation in this covered transaction, unless authorized by the department or agency with which this transaction originated.

f. The prospective lower tier participant further agrees by submitting this proposal that it will include this clause titled "Certification Regarding Debarment, Suspension, Ineligibility and Voluntary Exclusion-Lower Tier Covered Transaction," without modification, in all lower tier covered transactions and in all solicitations for lower tier covered transactions exceeding the $25,000 threshold.

g. A participant in a covered transaction may rely upon a certification of a prospective participant in a lower tier covered transaction that is not debarred, suspended, ineligible, or voluntarily excluded from the covered transaction, unless it knows that the certification is erroneous. A participant is responsible for ensuring that its principals are not suspended, debarred, or otherwise ineligible to participate in covered transactions. To verify the eligibility of its principals, as well as the eligibility of any lower tier prospective participants, each participant may, but is not required to, check the Excluded Parties List System website (https://www.epls.gov/), which is compiled by the General Services Administration.

h. Nothing contained in the foregoing shall be construed to require establishment of a system of records in order to render in good faith the certification required by this clause. The knowledge and information of participant is not required to exceed that which is normally possessed by a prudent person in the ordinary course of business dealings.

i. Except for transactions authorized under paragraph e of these instructions, if a participant in a covered transaction knowingly enters into a lower tier covered transaction with a person who is suspended, debarred, ineligible, or voluntarily excluded from participation in this transaction, in addition to other remedies available to the Federal Government, the department or agency with which this transaction originated may pursue available remedies, including suspension and/or debarment.

* * * * *

Certification Regarding Debarment, Suspension, Ineligibility and Voluntary Exclusion--Lower Tier Participants:

1. The prospective lower tier participant certifies, by submission of this proposal, that neither it nor its principals is presently debarred, suspended, proposed for debarment, declared ineligible, or voluntarily excluded from participating in covered transactions by any Federal department or agency.

2. Where the prospective lower tier participant is unable to certify to any of the statements in this certification, such prospective participant shall attach an explanation to this proposal.

* * * * *

XI. CERTIFICATION REGARDING USE OF CONTRACT FUNDS FOR LOBBYING

This provision is applicable to all Federal-aid construction contracts and to all related subcontracts which exceed $100,000 (49 CFR 20).

1. The prospective participant certifies, by signing and submitting this bid or proposal, to the best of his or her knowledge and belief, that:

a. No Federal appropriated funds have been paid or will be paid, by or on behalf of the undersigned, to any person for influencing or attempting to influence an officer or employee of any Federal agency, a Member of Congress, an officer or employee of Congress, or an employee of a Member of Congress in connection with the awarding of any Federal contract, the making of any Federal grant, the making of any Federal loan, the entering into of any cooperative agreement, and the extension, continuation, renewal, amendment, or modification of any Federal contract, grant, loan, or cooperative agreement.

b. If any funds other than Federal appropriated funds have been paid or will be paid to any person for influencing or attempting to influence an officer or employee of any Federal agency, a Member of Congress, an officer or employee of Congress, or an employee of a Member of Congress in connection with this Federal contract, grant, loan, or cooperative agreement, the undersigned shall complete and submit Standard Form-LLL, "Disclosure Form to Report Lobbying," in accordance with its instructions.

2. This certification is a material representation of fact upon which reliance was placed when this transaction was made or entered into. Submission of this certification is a prerequisite for making or entering into this transaction imposed by 31 U.S.C. 1352. Any person who fails to file the required certification shall be subject to a civil penalty of not less than $10,000 and not more than $100,000 for each such failure.

3. The prospective participant also agrees by submitting its bid or proposal that the participant shall require that the language of this certification be included in all lower tier subcontracts, which exceed $100,000 and that all such recipients shall certify and disclose accordingly.

12. FEMALE AND MINORITY GOALS

To comply with Section II, "Nondiscrimination," of "Required Contract Provisions Federal-Aid Construction Contracts," the following are for female and minority utilization goals for Federal-aid construction contracts and subcontracts that exceed $10,000:

The nationwide goal for female utilization is 6.9 percent.

The goals for minority utilization [45 Fed Reg 65984 (10/3/1980)] are as follows:

MINORITY UTILIZATION GOALS

Economic Area		Goal (Percent)
174	Redding CA: Non-SMSA (Standard Metropolitan Statistical Area) Counties: CA Lassen; CA Modoc; CA Plumas; CA Shasta; CA Siskiyou; CA Tehama	6.8
175	Eureka, CA Non-SMSA Counties: CA Del Norte; CA Humboldt; CA Trinity	6.6
176	San Francisco-Oakland-San Jose, CA: SMSA Counties: 7120 Salinas-Seaside-Monterey, CA CA Monterey 7360 San Francisco-Oakland CA Alameda; CA Contra Costa; CA Marin; CA San Francisco; CA San Mateo 7400 San Jose, CA CA Santa Clara, CA 7485 Santa Cruz, CA CA Santa Cruz 7500 Santa Rosa CA Sonoma 8720 Vallejo-Fairfield-Napa, CA CA Napa; CA Solano Non-SMSA Counties: CA Lake; CA Mendocino; CA San Benito	 28.9 25.6 19.6 14.9 9.1 17.1 23.2
177	Sacramento, CA: SMSA Counties: 6920 Sacramento, CA CA Placer; CA Sacramento; CA Yolo Non-SMSA Counties CA Butte; CA Colusa; CA El Dorado; CA Glenn; CA Nevada; CA Sierra; CA Sutter; CA Yuba	 16.1 14.3
178	Stockton-Modesto, CA: SMSA Counties: 5170 Modesto, CA CA Stanislaus 8120 Stockton, CA CA San Joaquin Non-SMSA Counties CA Alpine; CA Amador; CA Calaveras; CA Mariposa; CA Merced; CA Tuolumne	 12.3 24.3 19.8

179	Fresno-Bakersfield, CA SMSA Counties: 0680 Bakersfield, CA CA Kern 2840 Fresno, CA CA Fresno Non-SMSA Counties: CA Kings; CA Madera; CA Tulare	 19.1 26.1 23.6
180	Los Angeles, CA: SMSA Counties: 0360 Anaheim-Santa Ana-Garden Grove, CA CA Orange 4480 Los Angeles-Long Beach, CA CA Los Angeles 6000 Oxnard-Simi Valley-Ventura, CA CA Ventura 6780 Riverside-San Bernardino-Ontario, CA CA Riverside; CA San Bernardino 7480 Santa Barbara-Santa Maria-Lompoc, CA CA Santa Barbara Non-SMSA Counties CA Inyo; CA Mono; CA San Luis Obispo	 11.9 28.3 21.5 19.0 19.7 24.6
181	San Diego, CA: SMSA Counties 7320 San Diego, CA CA San Diego Non-SMSA Counties CA Imperial	 16.9 18.2

For the last full week July during which work is performed under the contract, you and each non material-supplier subcontractor with a subcontract of $10,000 or more must complete Form FHWA PR-1391 (Appendix C to 23 CFR 230). Submit the forms by August 15.

13. FEDERAL TRAINEE PROGRAM

For the Federal training program, the number of trainees or apprentices is _____.

This section applies if a number of trainees or apprentices is specified in the special provisions.

As part of your equal opportunity affirmative action program, provide on-the-job training to develop full journeymen in the types of trades or job classifications involved.

You have primary responsibility for meeting this training requirement.

If you subcontract a contract part, determine how many trainees or apprentices are to be trained by the subcontractor.

Include these training requirements in your subcontract.

Where feasible, 25 percent of apprentices or trainees in each occupation must be in their 1st year of apprenticeship or training.

Distribute the number of apprentices or trainees among the work classifications on the basis of your needs and the availability of journeymen in the various classifications within a reasonable recruitment area.

Before starting work, submit to the City of Nevada City:

1. Number of apprentices or trainees to be trained for each classification
2. Training program to be used
3. Training starting date for each classification

Obtain the City of Nevada City approval for this submitted information before you start work. The City of Nevada City credits you for each apprentice or trainee you employ on the work who is currently enrolled or becomes enrolled in an approved program.

The primary objective of this section is to train and upgrade minorities and women toward journeymen status. Make every effort to enroll minority and women apprentices or trainees, such as conducting systematic and direct recruitment through public and private sources likely to yield minority and women apprentices or trainees, to the extent they are available within a reasonable recruitment area. Show that you have made the efforts. In making these efforts, do not discriminate against any applicant for training.

Do not employ as an apprentice or trainee an employee:

1. In any classification in which the employee has successfully completed a training course leading to journeyman status or in which the employee has been employed as a journeyman
2. Who is not registered in a program approved by the US Department of Labor, Bureau of Apprenticeship and Training

Ask the employee if the employee has successfully completed a training course leading to journeyman status or has been employed as a journeyman. Your records must show the employee's answers to the questions.

In your training program, establish the minimum length and training type for each classification. The City of Nevada City and FHWA approves a program if one of the following is met:

1. It is calculated to:
   - Meet the your equal employment opportunity responsibilities
   - Qualify the average apprentice or trainee for journeyman status in the classification involved by the end of the training period
2. It is registered with the U.S. Department of Labor, Bureau of Apprenticeship and Training, and it is administered in a way consistent with the equal employment responsibilities of Federal-aid highway construction contracts

Obtain the State's approval for your training program before you start work involving the classification covered by the program.

Provide training in the construction crafts, not in clerk-typist or secretarial-type positions. Training is allowed in lower level management positions such as office engineers, estimators, and timekeepers if the training is oriented toward construction applications. Training is allowed in the laborer classification if significant and meaningful training is provided and approved by the division office. Off-site training is allowed if the training is an integral part of an approved training program and does not make up a significant part of the overall training.

The City of Nevada City reimburses you 80 cents per hour of training given an employee on this contract under an approved training program:

1. For on-site training
2. For off-site training if the apprentice or trainee is currently employed on a Federal-aid project and you do at least one of the following:
   - Contribute to the cost of the training
   - Provide the instruction to the apprentice or trainee
   - Pay the apprentice's or trainee's wages during the off-site training period
3. If you comply this section.

Each apprentice or trainee must:

1. Begin training on the project as soon as feasible after the start of work involving the apprentice's or trainee's skill
2. Remain on the project as long as training opportunities exist in the apprentice's or trainee's work classification or until the apprentice or trainee has completed the training program

Furnish the apprentice or trainee:

1. Copy of the program you will comply with in providing the training
2. Certification showing the type and length of training satisfactorily completed

14. TITLE VI ASSURANCES

During the performance of this Agreement, the contractor, for itself, its assignees and successors in interest (hereinafter collectively referred to as CONTRACTOR) agrees as follows:

(1) Compliance with Regulations: CONTRACTOR shall comply with the regulations relative to nondiscrimination in federally assisted programs of the Department of Transportation, Title 49, Code of Federal Regulations, Part 21, as they may be amended from time to time, (hereinafter referred to as the REGULATIONS), which are herein incorporated by reference and made a part of this agreement.

(2) Nondiscrimination: CONTRACTOR, with regard to the work performed by it during the AGREEMENT, shall not discriminate on the grounds of race, color, sex, national origin, religion, age, or disability in the selection and retention of sub-applicants, including procurements of materials and leases of equipment. CONTRACTOR shall not participate either directly or indirectly in the discrimination prohibited by Section 21.5 of the Regulations, including employment practices when the agreement covers a program set forth in Appendix B of the Regulations.

(3) Solicitations for Sub-agreements, Including Procurements of Materials and Equipment: In all solicitations either by competitive bidding or negotiation made by CONTRACTOR for work to be performed under a Sub-agreement, including procurements of materials or leases of equipment, each potential sub-applicant or supplier shall be notified by CONTRACTOR of the CONTRACTOR'S obligations under this Agreement and the Regulations relative to nondiscrimination on the grounds of race, color, or national origin.

(4) Information and Reports: CONTRACTOR shall provide all information and reports required by the Regulations, or directives issued pursuant thereto, and shall permit access to its books, records, accounts, other sources of information, and its facilities as may be determined by the California Department of Transportation or FHWA to be pertinent to ascertain compliance with such Regulations or directives. Where any information required of CONTRACTOR is in the exclusive possession of another who fails or refuses to furnish this information, CONTRACTOR shall so certify to the California Department of Transportation or the FHWA as appropriate, and shall set forth what efforts CONTRACTOR has made to obtain the information.

(5) Sanctions for Noncompliance: In the event of CONTRACTOR's noncompliance with the nondiscrimination provisions of this agreement, the California Department of Transportation shall impose such agreement sanctions as it or the FHWA may determine to be appropriate, including, but not limited to:

(a) withholding of payments to CONTRACTOR under the Agreement within a reasonable period of time, not to exceed 90 days; and/or

(b) cancellation, termination or suspension of the Agreement, in whole or in part.

(6) Incorporation of Provisions: CONTRACTOR shall include the provisions of paragraphs (1) through (6) in every sub-agreement, including procurements of materials and leases of equipment, unless exempt by the Regulations, or directives issued pursuant thereto.

CONTRACTOR shall take such action with respect to any sub-agreement or procurement as the California Department of Transportation or FHWA may direct as a means of enforcing such provisions including sanctions for noncompliance, provided, however, that, in the event CONTRACTOR becomes

involved in, or is threatened with, litigation with a sub-applicant or supplier as a result of such direction, CONTRACTOR may request the California Department of Transportation enter into such litigation to protect the interests of the State, and, in addition, CONTRACTOR may request the United States to enter into such litigation to protect the interests of the United States.

15. USE OF UNITED STATES-FLAG VESSELS

The CONTRACTOR agrees-

1. To utilize privately owned United States-flag commercial vessels to ship at least 50 percent of the gross tonnage (computed separately for dry bulk carries, dry cargo liners, and tankers) involved, whenever shipping any equipment, material, or commodities pursuant to this contract, to the extent such vessels are available at fair and reasonable rates for United States-flag commercial vessels.
2. To Furnish within 20 days following the date of loading for shipments originating within the United State or within 30 working days following the date of loading for shipments originating outside the United States, a legible copy of a rated "on-board" commercial ocean bill-of-lading in English for each shipment of cargo described in paragraph (1) of this section to both the Contracting Officer (through the prime contractor in the case of subcontractor bills-of-lading) and to the Division of National Cargo, Office of Market Development, Maritime Administration, Washington, DC 20590.
3. To insert the substance of the provisions of this clause in all subcontracts issued pursuant to this contract.

MAINTAIN RECORDS AND SUBMIT REPORTS DOCUMENTING YOUR PERFORMANCE UNDER THIS SECTION

BID ADDENDUM NO. 1

This bid addendum is for the following project:

STREET IMPROVEMENTS ~ ADAMS STREET AND NILE STREET

Bid Documents are revised as follows. Bidders shall acknowledge receipt of this addendum on the Bid Proposal.

Addendum Description – Clarification regarding Rock Facing for Retaining Wall

No Change to Bid Date

Rock shall be a local mix of serpentine and granite. Source of rock shall be within 100 miles of jobsite.

DATED: March 21, 2018

CITY OF NEVADA CITY

Bryan McAlister

_____

Bryan McAlister, P.E.

City Engineer

BID OPENING RESULTS

PROJECT: Street Improvements - Adams & Nile DATE: 3/27/18

TIME OF BID OPENING: 3:00 A.M./P.M.

COMPANY NAME	BID AMOUNT
Simpson, Steve, Auburn	$ 404,763 —
Central Valley, Roseville	$ 551,545 —
Hanson Bros,	$ 524,607 —
Western	$ 703,050 —
	$
	$

BID OPENING SIGN-IN SHEET

PROJECT: Street Improvements - Adams & Nile DATE: 3/27/18

TIME OF BID OPENING: 3:00 A.M./P.M.

ATTENDEES – Please Sign-in and Print your name

Signature	Print Name	Phone #
	LOREE MCCAY	(530) 265-2496 x133
	William J. Falconi	(916) 765-1010
	Shirley Neely	273-3381
	Anna Lester	916 652-3990
	DAN REINHART	530 2653394

S IMPSON

BID SCHEDULE

CITY OF NEVADA CITY
STREET IMPROVEMENTS ~ ADAMS STREET AND NILE STREET

BID FORM

Item No.	Quantity	Unit	Item Description	Unit Price	Total Price
1	1	LS	Mobilization	$ LS	$ 15,000
2	11	EA	Tree Removal	1636.36	18,600
3	730	LF	Curb	31.15	22,740
4	1,120	LF	Curb & Gutter	45.06	50,472
5	5,800	SF	Sidewalk (including Driveways)	10.62	61,617
6	9	EA	Curb Ramp	1801.33	16,212
7	840	SF	Retaining Wall	130.95	110,000
8	1	LS	Grind Asphalt	LS	15,200
9	100	LF	Asphalt Dike	67.35	6735
10	125	TN	Asphalt Paving	186.89	23,362
11	2,600	SF	Aggregate Base / New Subgrade	12.85	33,410
12	2	EA	Drainage Inlet	3,000	6,000
13	1	LS	Signage and Striping	LS	7865
14	1	LS	Traffic Control	LS	18,000

TOTAL $404,763

LIST OF SUBCONTRACTORS

NAME (DBE Y/N)	PLACE OF BUSINESS CONTRACTORS LICENSE	BID ITEMS OF WORK % SUBCONTRACTED
1. Sierra Striping NO	9725 Del Road, Roseville 95747 License # 65190	Signage & Striping
2. Cyrus Tree Service NO	2036 Nev. City Hwy, GV 95945 License # 803287	Tree Removal
3. Dan Reinhart No	Nevada City License # 514635	Masonry
4. Bobby Jones Concrete	Grass Valley	Concrete Construction
5.		
6.		
7.		
8.		
9.		
10.		

CITY OF NEVADA CITY IMPROVEMENTS FOR:

ADAMS ST. AND NILE ST. SIDEWALK IMPROVEMENTS

GENERAL NOTES:

THESE NOTES COVER THE REQUIREMENTS FOR CONSTRUCTION OF THIS PROJECT. REFERENCES TO THE CALTRANS STANDARD SPECIFICATIONS ARE FOR TECHNICAL CONTENT ONLY. METHODS OF MEASUREMENTS AND PAYMENT FOR THIS WORK ARE TO BE INDEPENDENTLY AGREED UPON BETWEEN THE OWNER AND THE CONTRACTOR AND ARE NOT COVERED BY THESE NOTES OR BY REFERENCES TO THE STANDARD SPECIFICATIONS.

All materials and construction shall meet the requirements of the following specifications, codes and these improvement plans. The adopted standards of the governing agency shall govern in case of conflict.

State of California, Department of Transportation, 2015 Standard Specifications (Herein called standard specifications) and 2015 Standard Plans.

California Uniform Building Code: 2016 (Current Edition).

Nevada County Standards: Current Edition

Nevada Irrigation District Development Standards and Standard Details, Current Edition

All work must comply with current California Building Codes for Accessibility Chapter 11, CBC and Department of State Architect (DSA) Policies and Procedures.

It is the responsibility of the contractor to obtain copies of these specifications and codes and have them available at the work location at all times. The contractor shall examine and become familiar with all parts of these specifications and codes that apply to this work. In general, the applicable sections of agency specifications and the standard specifications are not repeated in these notes. It is the contractor's responsibility to construct all facilities in accordance with the applicable agency requirements and the standard specifications.

The types, locations, sizes and depths of existing underground utilities as shown on the plans were obtained from sources of varying reliability. The contractor is cautioned that only actual excavation will reveal the types, extent, sizes, locations and depths of such such underground facilities. A reasonable effort has been made to locate and delineate all known underground facilities. However, neither the owner nor the Engineer can assume any responsibility for the completeness or accuracy of the delineation of such underground facilities nor for the existence of other buried objects or facilities which may be encountered but are not shown on these plans.

The contractor is responsible for contacting the utility companies or appropriate agencies with facilities in the area, and requesting a verification at the construction site where such utilities may conflict with the placement of improvements shown on these plans.

All existing utilities shall be marked prior to beginning any excavation or trenching. Contact the Underground Service Alert at 800-642-2444 for the marking of existing utility locations.

The contractor shall immediately notify the Engineer if there is a conflict between any existing utilities and new construction as shown on these plans.

The contractor shall comply with all applicable occupational safety and health standards, rules, regulations and orders established by the State of California.

The contractor is solely responsible for the safety procedures to be followed by workers, subcontractors, and other persons working on the project. The contractor shall provide for the safety of the public both day and night. The engineer is not hired to review or approve the safety procedure followed by the contractor.

As required by the construction safety orders of the California Division of Occupational Safety and Health sufficient bracing and shoring shall be installed in the trenches to ensure the safety of workers. Where practical, all such bracing and shoring shall be removed from the trench as the backfilling proceeds. The contractor shall obtain a trench excavation permit, if required, from the California Division of Occupational Safety and Health.

Public safety and traffic control shall be provided in accordance with City requirements and Caltrans Standards. Safe vehicular and pedestrian access shall be provided at all times during construction.

Flagmen and traffic handling devices shall be provided at the contractor expense in accordance with Manual on Uniform Traffic Control Devices, or MUTCD.

All construction equipment working in areas of public traffic shall comply with the applicable section of the California Vehicle Code.

The contractor shall comply with all local sound control rules, regulations and ordinances. Each internal combustion engine used for any purpose on the job shall be equipped with a spark arrestor and muffler. The hours of work shall be limited to between 7:00 A.M. and 6:00 P.M. Monday through Saturday unless otherwise specified in the Contract.

Fugitive dust emissions resulting from site clearing and road construction shall be minimized at all times, utilizing control measures including dust palliatives, regularly applied water, graveled or paved haul roads, etc.

During the progress of the work, the contractor shall keep the job site in a clean and orderly condition. Excess or unsuitable material shall be removed from the job site. Spillage and trackage resulting from hauling along or across existing streets or roads shall be removed immediately by the contractor. Dust and mud control shall be provided at all times including evenings, weekends, and holidays. All existing and new drainage facilities including gutters and roadside ditches shall be kept clean and free of debris at all times including evenings, weekends, and holidays.

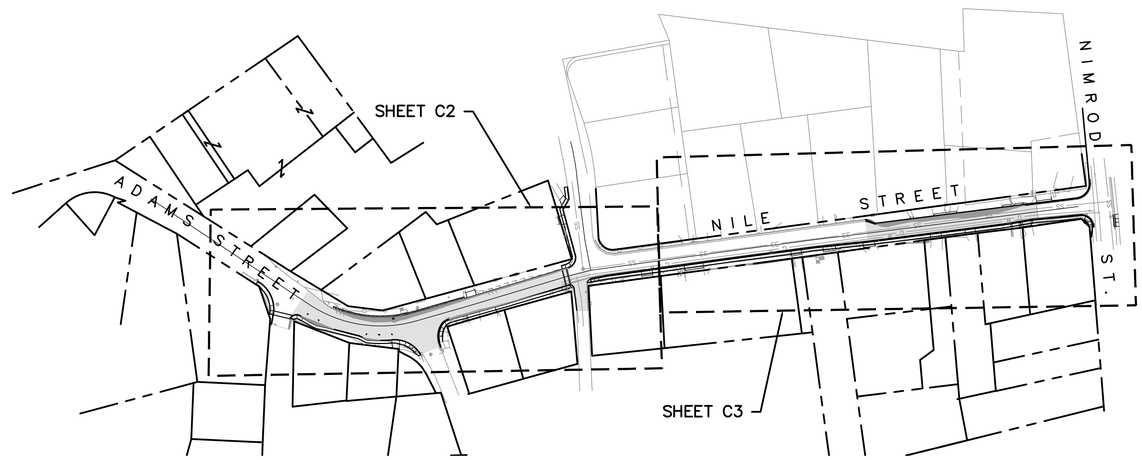

LOCATION MAP
1"=100'

MATERIAL NOTES:

AGGREGATE BASE SHALL BE CLASS 2, 3/4" MAXIMUM GRADING, CONFORMING TO STANDARD SPECS. SECTION 26, PLACED AT 95% RELATIVE COMPACTION.

ASPHALT CONCRETE SHALL BE 1/2" MAX. MED. (TYPE B) AGGREGATE, PG 64-16 ASPHALT BINDER IN ACCORDANCE WITH CALTRANS STANDARD SPECS. SECTION 39, 93, AND 94. ASPHALT CONCRETE SHALL BE COMPACTED TO 95% RELATIVE COMPACTION WITH AN AIR VOIDS RATIO OF 3% TO 10%.

ALL CONCRETE MATERIALS AND CONSTRUCTION SHALL BE IN CONFORMANCE WITH CALTRANS STANDARD SPECIFICATION SECTION 90. CONCRETE FOR RETAINING WALLS SHALL BE CLASS B WITH A MINIMUM COMPRESSIVE STRENGTH OF 3000 P.S.I. PRIOR TO PLACEMENT OF ANY BACKFILL.

Any excess and unsuitable material shall be removed from the owner's property and legally disposed of at the Contractors expense.

The following ASTM test methods shall be used instead of California Tests specified in the standard specifications for relative compaction, grading (sieve analysis), and sand equivalent.

Sand Equivalent	ASTM 2419
Sieve Analysis	ASTM C136
Field In Place Density	ASTM D1556 or D2922 and D3017
Moisture Density Relationship	ASTM D1557

Relative compaction (RC) shall be computed as follows:
RC=(field in place dry density/maximum dry density) x 100

SHEET INDEX

C1 COVER SHEET
C2 ADAMS AND NILE STREET
C3 NILE STREET
C4 DETAILS

SCALE
50 0 25 50 100
(IN FEET)
1 inch = 50 feet

REGISTERED PROFESSIONAL ENGINEER
BRYAN K. McALISTER
C 058570
December 31, 2018
CIVIL
STATE OF CALIFORNIA

DATE SIGNED: 7/6/2017

NO.	REVISIONS	DATE

DESIGNED: WJF / BKM
DRAWN: BKM
PROJ. NO:
DWG:adams design1
DATE: May, 2016

CMAQ IMPROVEMENTS
ADAMS / NILE SIDEWALK
NEVADA CITY CALIFORNIA

CITY OF NEVADA CITY
317 BROAD STREET
NEVADA CITY, CALIFORNIA 95959
(530) 265-2496

C1
1 OF 4

© SIERRA LAND SOLUTIONS, INC. 2016

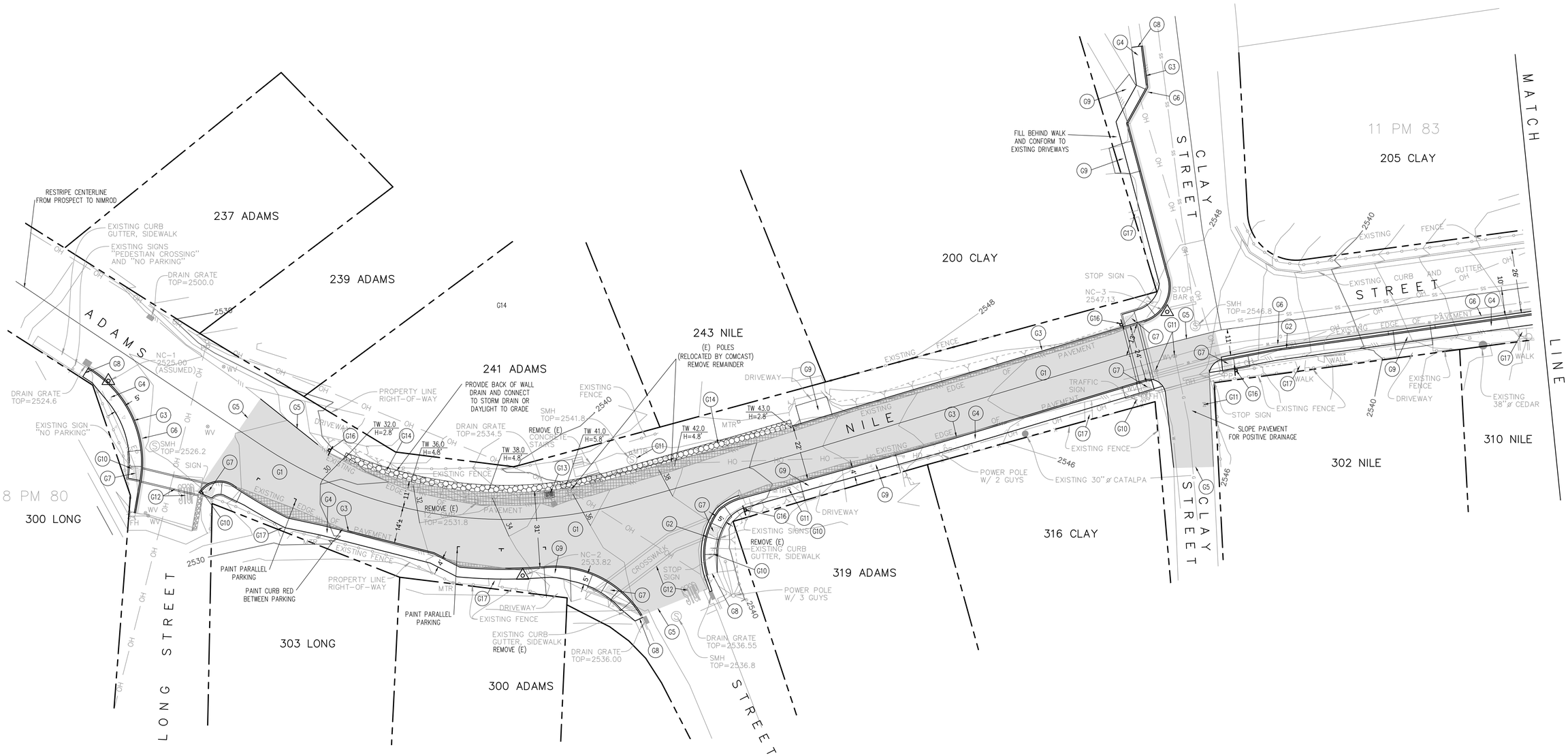

LEGEND:

- PROPERTY LINE
- TOP OF CUT
- TOE OF FILL
- FLOW LINE
- EXISTING FENCE
- EDGE OF ROADWAY
- OH — OVERHEAD ELECTRIC
- PP — POWER POLE W/ GUY
- FH — FIRE HYDRANT
- MTR — METER BOX
- WV — WATER VALVE
- MB — MAIL BOX
- SMH — SEWER MANHOLE
- SCO — SEWER CLEANOUT
- EXISTING TREE
- CONTROL/BENCHMARK

- PROVIDE NEW PAVEMENT (FOR WIDENING)
- GRIND AND OVERLAY
- SAWCUT FOR INSTALLATION OF CURB AND JOIN EXISTING PAVEMENT

NOTE:

PROPERTY LINE LOCATIONS ARE APPROXIMATE.

CONSTRUCTION NOTES:

G1 GRIND 1-1/2" (0.125') EXISTING PAVEMENT AND AND OVERLAY / REPAVE STREET TO FINISH CONTOURS. WHERE WIDENING IS SHOWN, CONSTRUCT 3" ASPHALT PAVEMENT OVER 6" AGG. BASE (GRINDINGS CAN BE USED IN LIEU OF BASE)
G2 CONSTRUCT MODIFIED TYPE A2-6" CURB AND GUTTER (DETAIL 3/C4)
G3 CONSTRUCT TYPE A1-6" CURB (DETAIL 2/C4)
G4 CONSTRUCT CONCRETE SIDEWALK (DETAIL 4/C4)
G5 JOIN EXISTING ASPHALT (DETAIL 1/C4)
G6 SAWCUT PAVEMENT AT 12" MIN. FROM EDGE OF CURB/GUTTER AND PROVIDE NEW PAVEMENT (DETAILS 1, 2 AND 3/C4)
G7 CONSTRUCT ADA RAMP WITH TRUNCATED DOMES (CALTRANS STANDARD DETAIL A88A)
G8 SAWCUT SIDEWALK AND CONFORM TO EXISTING WALK
G9 CONSTRUCT DRIVEWAY (DETAIL 5/C4)
G10 RELOCATE EXISTING SIGN TO EDGE OF WALK
G11 ADJUST UTILITIES TO GRADE (TYPICAL)
G12 PROVIDE STRIPING FOR CENTERLINE, CROSSWALKS, STOP BARS AND STOP MARKINGS (TYPICAL)
G13 CONSTRUCT TYPE G1 DRAINAGE INLET (24"X36" WITH BICYCLE PROOF GRATE) AND CONNECT TO EXISTING STORM DRAIN PIPE (CONNECT BACK OF WALL DRAIN TO INLET)
G14 CONSTRUCT CONCRETE RETAINING WALL WITH ROCK FACING (DETAIL 6/C4)
G15 NOT USED
G16 PROVIDE NO PARKING SIGN
G17 RECONSTRUCT EX. WALK (APPROX. 5') TO CONFORM TO NEW SIDEWALK IMPROVEMENTS.

SCALE

20 0 10 20 40

(IN FEET)
1 inch = 20 feet

REGISTERED PROFESSIONAL ENGINEER
BRIAN K. McALISTER
C 058570
December 31, 2018
CIVIL
STATE OF CALIFORNIA

DATE SIGNED: 7/6/2017

NO.	REVISIONS	DATE

DESIGNED: WJF / BKM
DRAWN: BKM
PROJ. NO:
DWG:adams design1
DATE: May, 2016

CMAQ IMPROVEMENTS

ADAMS / NILE SIDEWALK

NEVADA CITY CALIFORNIA

CITY OF NEVADA CITY
317 BROAD STREET
NEVADA CITY, CALIFORNIA 95959
(530) 265-2496

C2

© SIERRA LAND SOLUTIONS, INC. 2016

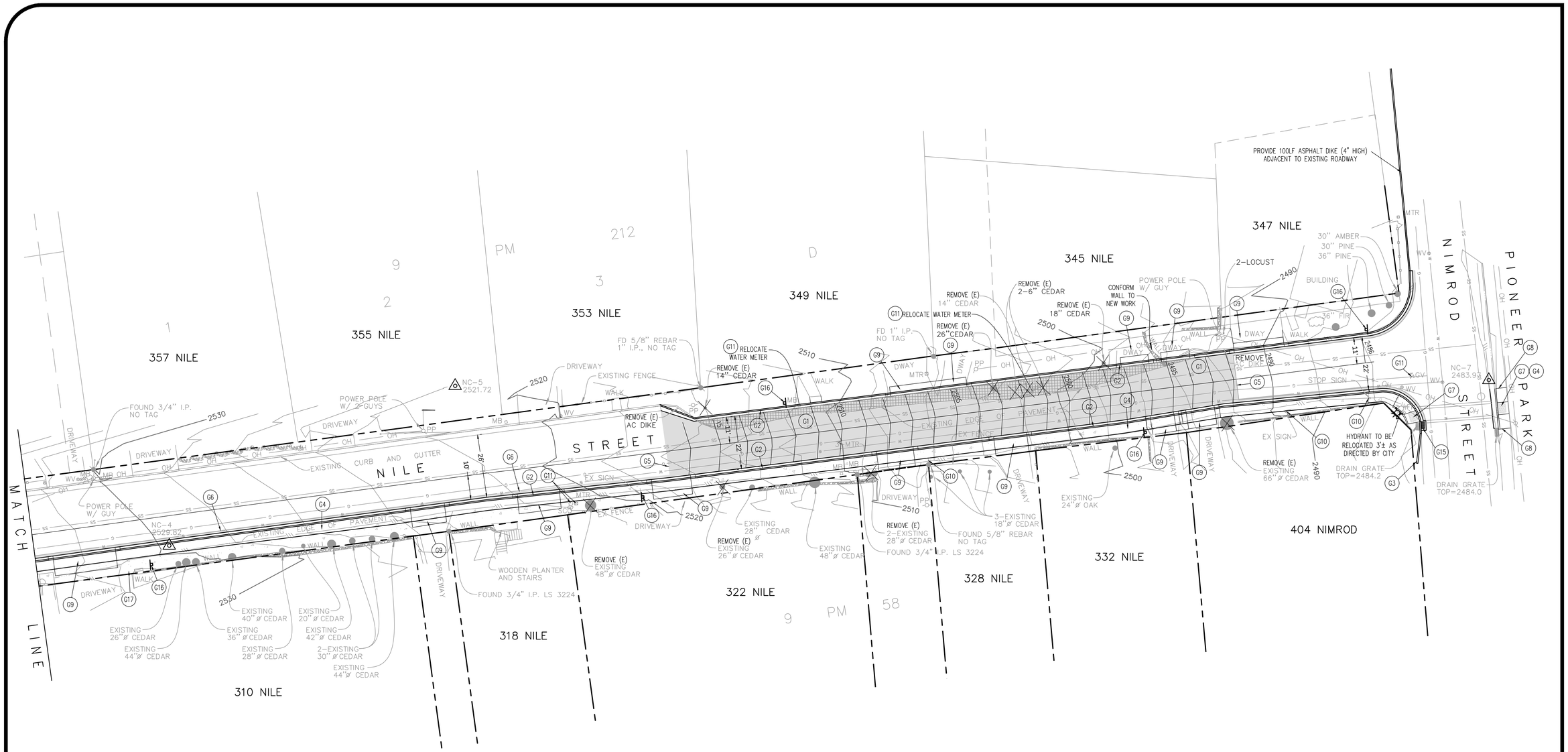

LEGEND:

- PROPERTY LINE
- TOP OF CUT
- TOE OF FILL
- FLOW LINE
- EXISTING FENCE
- EDGE OF ROADWAY
- OH — OVERHEAD ELECTRIC
- PP — POWER POLE W/ GUY
- FH — FIRE HYDRANT
- MTR — METER BOX
- WV — WATER VALVE
- MB — MAIL BOX
- SMH — SEWER MANHOLE
- SCO — SEWER CLEANOUT
- EXISTING TREE
- CONTROL/BENCHMARK

- PROVIDE NEW PAVEMENT (FOR WIDENING)
- GRIND AND OVERLAY
- SAWCUT FOR INSTALLATION OF CURB AND JOIN EXISTING PAVEMENT

NOTE:

PROPERTY LINE LOCATIONS ARE APPROXIMATE.

CONSTRUCTION NOTES:

G1 GRIND 1-1/2" (0.125') EXISTING PAVEMENT AND AND OVERLAY / REPAVE STREET TO FINISH CONTOURS. WHERE WIDENING IS SHOWN, CONSTRUCT 3" ASPHALT PAVEMENT OVER 6" AGG. BASE (GRINDINGS CAN BE USED IN LIEU OF BASE)
G2 CONSTRUCT MODIFIED TYPE A2-6" CURB AND GUTTER (DETAIL 3/C4)
G3 CONSTRUCT TYPE A1-6" CURB (DETAIL 2/C4)
G4 CONSTRUCT CONCRETE SIDEWALK (DETAIL 4/C4)
G5 JOIN EXISTING ASPHALT (DETAIL 1/C4)
G6 SAWCUT PAVEMENT AT 12" MIN. FROM EDGE OF CURB/GUTTER AND PROVIDE NEW PAVEMENT (DETAILS 1, 2 AND 3/C4)
G7 CONSTRUCT ADA RAMP WITH TRUNCATED DOMES (CALTRANS STANDARD DETAIL A88A)
G8 SAWCUT SIDEWALK AND CONFORM TO EXISTING WALK
G9 CONSTRUCT DRIVEWAY (DETAIL 5/C4)
G10 RELOCATE EXISTING SIGN TO EDGE OF WALK
G11 ADJUST UTILITIES TO GRADE (TYPICAL)
G12 PROVIDE STRIPING FOR CENTERLINE, CROSSWALKS, STOP BARS AND STOP MARKINGS (TYPICAL)
G15 CONSTRUCT TYPE GO DRAINAGE CURB OPENING INLET (WITH BICYCLE PROOF GRATE) AND CONNECT TO EXISTING STORM DRAIN PIPE
G16 PROVIDE NO PARKING SIGN
G17 RECONSTRUCT EX. WALK (APPROX. 5') TO CONFORM TO NEW SIDEWALK IMPROVEMENTS.

N

SCALE

20 0 10 20 40

(IN FEET)
1 inch = 20 feet

REGISTERED PROFESSIONAL ENGINEER
BRIAN K. McALISTER
C 058570
December 31, 2018
CIVIL
STATE OF CALIFORNIA

DATE SIGNED: 7/6/2017

NO.	REVISIONS	DATE

DESIGNED: WJF / BKM
DRAWN: BKM
PROJ. NO:
DWG:adams design1
DATE: May. 2016

CMAQ IMPROVEMENTS

ADAMS / NILE SIDEWALK

NEVADA CITY CALIFORNIA

CITY OF NEVADA CITY
317 BROAD STREET
NEVADA CITY, CALIFORNIA 95959
(530) 265-2496

C3

© SIERRA LAND SOLUTIONS, INC. 2016

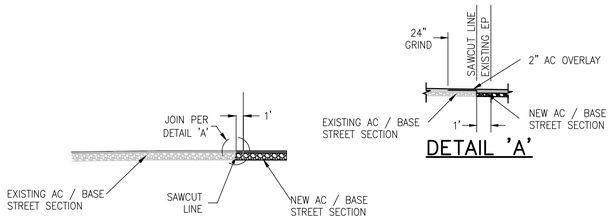

1 JOIN EXISTING ASPHALT DETAIL

NTS

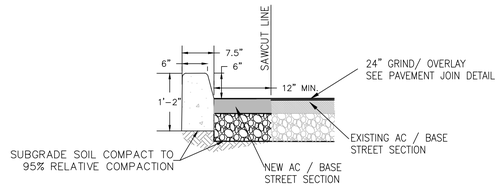

2 TYPE A1-6" CURB

NTS

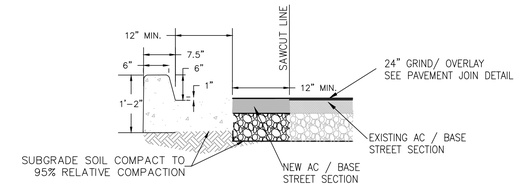

3 MODIFIED TYPE A2-6" CURB AND GUTTER

NTS

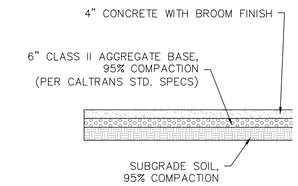

4 TYPICAL SIDEWALK SECTION

NTS

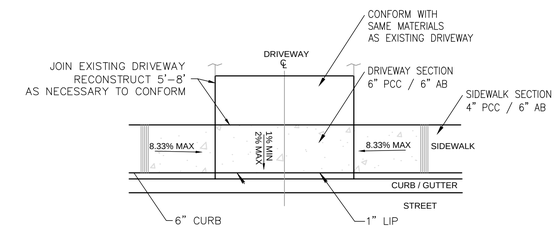

5 DRIVEWAY DETAIL

NTS

TYPE G0 CURB INLET

FOR 6" CURB
CALTRANS G0 DRAINAGE INLET

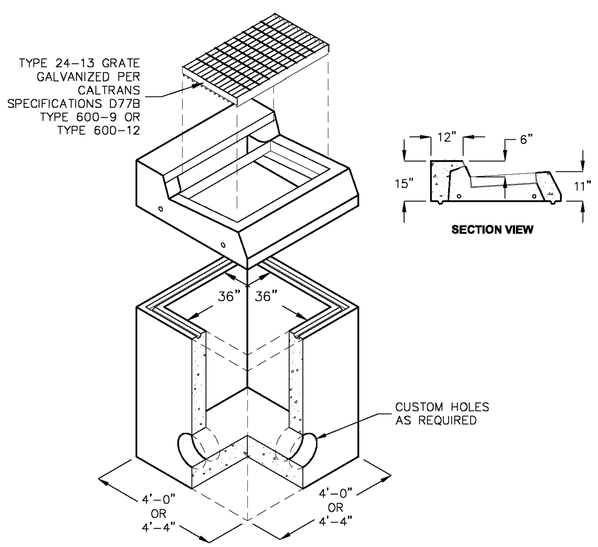

NOTES:
- FOR BOX HEIGHT 8'-3" OR LESS WALL THICKNESS IS 6"
- FOR HEIGHTS GREATER THAN 8'-3" WALL THICKNESS IS 8"
- MANHOLE STEPS ARE REQUIRED FOR BOXES OF 30" DEPTH OR GREATER.
- 8" BASE THICKNESS

DESIGN LOAD: H-20 TRAFFIC

FOR COMPLETE DESIGN AND PRODUCT INFORMATION
CONTACT JENSEN PRECAST.

3/12/07
DI3636_G0 6_B.dwg
© 2007 Jensen Precast

JENSEN PRECAST

TYPE G1 CURB INLET

CALTRANS G1 DRAINAGE INLET

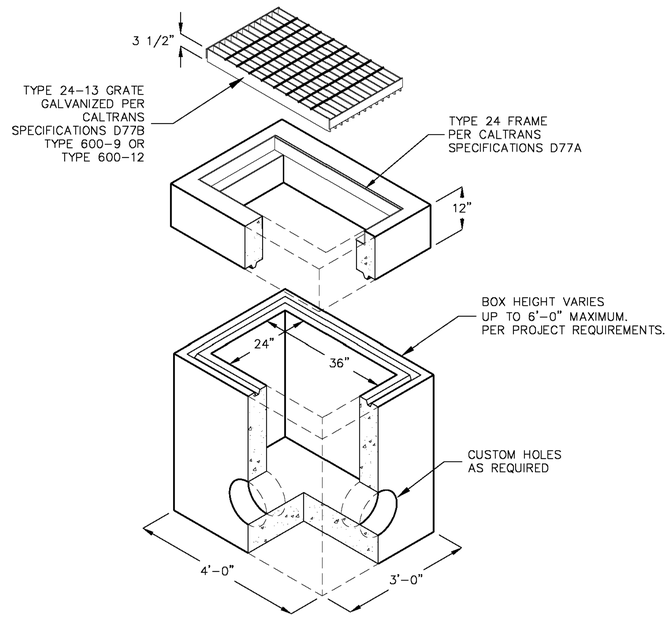

BOX DESIGN LOAD: H-20 TRAFFIC.

- MAXIMUM INSIDE HEIGHT IS 6'-0".
- MANHOLE STEPS ARE RQUIRED FOR BOXES OF 30" DEPTH OR GREATER.

FOR COMPLETE DESIGN AND PRODUCT INFORMATION
CONTACT JENSEN PRECAST.

3/13/07
DI2436_G1_C.dwg
© 2007 Jensen Precast

JENSEN PRECAST

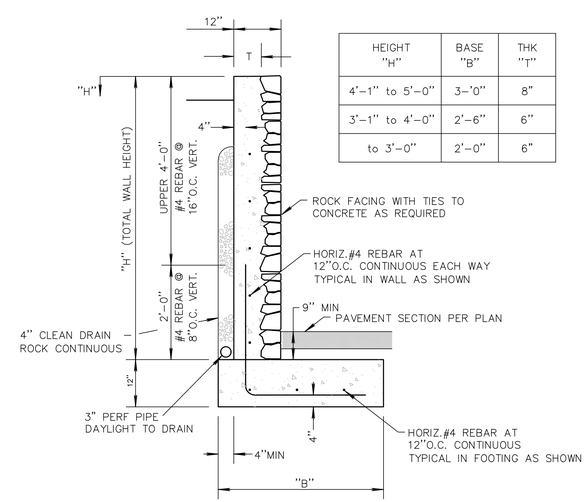

HEIGHT "H"	BASE "B"	THK "T"
4'-1" to 5'-0"	3'-0"	8"
3'-1" to 4'-0"	2'-6"	6"
to 3'-0"	2'-0"	6"

6 CONCRETE WALL DETAIL

NTS

REGISTERED PROFESSIONAL ENGINEER
BRYAN K. McALISTER
C 058570
December 31, 2018
CIVIL
STATE OF CALIFORNIA

DATE SIGNED: 7/6/2017

NO.	REVISIONS	DATE

DESIGNED: WJF / BKM
DRAWN: BKM
PROJ. NO:
DWG:adams design1
DATE: April, 2017

CMAQ IMPROVEMENTS
ADAMS / NILE SIDEWALK
DETAILS

NEVADA CITY CALIFORNIA

CITY OF NEVADA CITY
317 BROAD STREET
NEVADA CITY, CALIFORNIA 95959
(530) 265-2496

C4

© SIERRA LAND SOLUTIONS, INC. 2016

RESOLUTION NO. 2018-XX

A RESOLUTION OF THE CITY COUNCIL OF THE CITY OF NEVADA CITY TO AWARD A CONTRACT TO SIMPSON & SIMPSON INC. FOR ADAMS STREET AND NILE STREET IMPROVEMENTS AND AUTHORIZE MAYOR TO SIGN

WHEREAS, the Adams Street and Nile Street Improvement project consists of new sidewalk on Adams Street and Nile Street with connections to sidewalks on adjacent streets.

WHEREAS, the project provides safe, convenient and efficient pedestrian access to residents and visitors to Pioneer Park.

WHEREAS, consistent with the goals set forth by the Congestion Mitigation and Air Quality (CMAQ) program, this project will improve safety for pedestrians; promote energy conservation with efficient non-motorized pedestrian travel; enhance the environment with fewer emissions; and improve the quality of life for residents of Nevada City.

WHEREAS, consistent with Municipal Code requirements, City staff advertised and received bids for Adams Street and Nile Street Improvements.

NOW, THEREFORE, BE IT RESOLVED by the City Council of the City of Nevada City to award the contract to Simpson & Simpson Inc. in the amount of $404,763.00 plus $35,000.00 contingencies for Adams Street and Nile Street Improvements in Nevada City and authorize the Mayor to sign.

PASSED AND ADOPTED at the regular meeting of the City Council of the City of Nevada City on the 11th day of April, 2018, by the following vote:

AYES:

NOES:

ABSENT:

ABSTAIN:

_____

Duane Strawser, Mayor

ATTEST:

_____

Niel Locke, City Clerk

REPORT TO CITY COUNCIL

City of Nevada City
317 Broad Street
Nevada City CA 95959
www.nevadacityca.gov

APRIL 11, 2018

TITLE: Award Of Contract For Sewer Replacement At Sacramento Street In Nevada City

RECOMMENDATION: Pass Resolution 2018-XX Awarding a contract to Escheman Construction in the amount of $42,818.63 plus $8,000.00 contingencies for Sewer Replacement at Sacramento Street in Nevada City and authorize the Mayor to sign.

CONTACT: Bryan K. McAlister, City Engineer

BACKGROUND/DISCUSSION: The City Engineer and Public Works staff identified sewer improvements that are necessary for continued service to commercial and residential property owner along Sacramento Street. The project consists of replacement of aging infrastructure including removal and replacement of sewer mainline and sewer laterals, as further shown and described in the contract.

City staff solicited bids for Sewer Replacement at Sacramento Street from local contractors. Bids received are as follows:

- Escheman Construction, Brownsville CA $ 42,818.63
- CME, Grass Valley CA $ 124,010.00
- Hansen Bros, Grass Valley CA $ 81,956.00

Escheman Construction was selected as the lowest responsive and responsible bidder.

FISCAL CONSIDERATIONS: The project will be funded as authorized in the fiscal year 2017/2018 water fund appropriations for water distribution.

ATTACHMENT:

- ✓ Contract for Sewer Replacement at Sacramento Street in Nevada City
- ✓ Resolution 2018-XX

SACRAMENTO ST.

SEWER IMPROVEMENTS

City of Nevada City, 95959
Nevada County, California

Bryan K. McAlister
PE C58570
PLS 9199

William J. Falconi
PE 25842
PLS 4911

NOTICE TO CONTRACTOR'S

Sacramento Street Sewer Improvements

Sealed proposals for Sacramento St. Sewer Line will be received by the City at City Hall, 317 Broad Street, Nevada City, California, 95959, until **3:00 PM on March 29, 2018,** at which time, or as soon thereafter as practicable, all such proposals will be publicly opened and read at City Hall, 317 Broad Street, Nevada City, California.

Bids shall be enclosed and sealed in an envelope addressed to the City of Nevada City at the above stated address and shall be marked "Sacramento St. Sewer Line."

The work includes the furnishing of all labor, materials, and equipment required for the job in accordance with the plans, specifications and other contract documents as set forth by the City Engineer. Such bid documents will be on file with the City staff and are available for inspection during office hours. Bid proposals may be obtained at the office of said City Hall at 317 Broad Street, Nevada City, California on or after **March 9th, 2018.**

****

The City reserves the right to reject all bids; or to accept any portion of bid schedule; to reject any bid which is incomplete or irregular; to determine which proposal is, in its judgment, the lowest responsible bid of a responsible bidder and to waive any informality or minor irregularity of any bid.

DATED: March 9th, 2018 CITY OF NEVADA CITY

_____

Bryan McAlister, P.E.

City Engineer

PROPOSAL/CONTRACT

SACRAMENTO ST. SEWER LINE IMPROVEMENTS, Nevada City, CA

TO: City of Nevada City, City Hall, Nevada City, California.

The undersigned, as a bidder, submits the following proposal for the SEWER LINE IMPROVEMENTS in the City of Nevada City, California, and offers to perform all work and furnish all labor, materials, tools, equipment, power and water as required for the completion of said project, in accordance with the plans, specifications and all other contract documents. The bidder has inspected the project site and has examined all conditions affecting the proposed work. The bidder is licensed with Contractors State License Board and is registered as a public works contractor with the Department of Industrial Relations as required to bid on this contract.

If this bid is accepted, the bidder agrees to execute the Agreement, and furnish to the City all documents and evidences of insurance, within ten (10) days after receiving written notice of the award of contract, and complete the project within thirty **(30) working days** after receiving written notice to proceed. **No bond is required for this project.**

Attached to this bid and made a part hereof is a list of proposed subcontractors, setting forth all information required by Section 4104 of the Government Code.

THERE IS NO MANDATORY WALK-THROUGH FOR THIS PROJECT

The undersigned is (state whether individual, partnership or corporation) Individual.

DATED: 03/28/18

FIRM NAME: Escheman Construction

ADDRESS: P.O. Box 607

Brownsville, Ca.

PHONE: 530-675-2323

CELL PHONE: 530-913-5651

CONTRACTOR'S #: 357520

EXPIRATION: 04/30/19

NEVADA CITY BUSINESS LICENSE #: 0000001206

EXPIRATION: 11/30/18

BY: _____
Signature of Authorized Person

Contact Person: Lance Barlean

BID SCHEDULE

CITY OF NEVADA CITY
SACRAMENTO ST. SEWER LINE IMPROVEMENTS

No.	Quantity	Unit	Item Description	Unit Price	Total Price
1.)	1	LS	Mobilization	$ 7008.75	$ 7008.75
2.)	230	LF	6" Sewer Pipe	$ 115.32	$ 26,523.60
3.)	2	EA	Sewer Lateral Connect to Existing	$ 2,064.65	$ 4,129.30
4.)	2	EA	Two-Way Clean Out	$ 2,578.49	$ 5,156.98

Grand Total: $ 42,818.63

Note
1. Project shall be prevailing wages.

LIST OF SUBCONTRACTORS

NAME	PLACE OF BUSINESS	PORTION OF WORK
1. None		
2.		
3.		
4.		
5.		
6.		
7.		
8.		
9.		
10.		

AGREEMENT

THIS AGREEMENT is made this _____ day of _____, between the CITY OF NEVADA CITY, a municipal corporation, hereinafter called "City," and _____, hereinafter called "Contractor."

WHEREAS, City has caused to be prepared certain plans, specifications and other contract documents pertaining to the SACRAMENTO ST. SEWER LINE IMPROVEMENTS in said City: and

WHEREAS, after notice duly given, City has awarded the contract for such work to Contractor;

NOW, THEREFORE, IT IS AGREED by and between said parties as follows:

1. Scope of Work. The contractor agrees to furnish all labor, materials, tools and equipment, required to complete the improvements in Nevada City, California, in accordance with the plans, specifications and other contract representation made in mandatory meetings. All such work shall be performed in a good and workmanlike manner and to the satisfaction of the designer of said project.

2. Contract Price. As consideration for all such work, City agrees to pay to Contractor the total sum of _____ ($_____) Dollars, payable in the manner hereinafter set forth.

3. Contract Documents. The complete contract between the parties hereto consists of the Notice to Contractors, the Information to Bidders, the Bid Proposal, the General Conditions, the Plans and Specifications, and all other drawings and printed or written explanatory matter pertaining thereto, as covered in the mandatory pre-bid meeting. All of the foregoing documents are intended to cooperate, so that any work or requirement specified in any of them is to be carried out or observed the same as if mentioned in all.

4. Time for Performance. Within five (5) days after the execution of this Agreement, City shall give Contractor written Notice to Proceed, and thereafter Contractor shall commence the work and shall prosecute the same with due diligence until completion and acceptance by City; provided, however, that all such work shall be completed and ready for use within **thirty (30) working days** after Contractor receives said Notice to Proceed.

5. Extension of Time. If, because of adverse weather conditions, strikes, inability of the Contractor (through no fault on his/her part) to obtain necessary materials, or other cause beyond the reasonable control of Contractor, Contractor is unable to complete the required work within the allowed time, he shall be entitled to an extension or extensions of such time, commensurate with the unavoidable delay thus caused; provided, however that Contractor shall apply to City for approval of any such extension prior to the expiration of the time for performance as specified in the preceding paragraph.

6. Contractor's Failure to Complete Work. If Contractor fails to prosecute the work with such diligence as will insure its completion within the time hereinabove specified, or any extension thereof, or fails to complete such work within such time, or if Contractor shall otherwise violate this Agreement, City may give written notice to Contractor and his sureties of City's intention to terminate this Agreement unless, within five (5) days after services of such notice, satisfactory arrangements are made with the City for the completion of such work or the curing of such breach; and if such arrangements are not made within such time, City may, at its option, terminate this Agreement by giving written notice of such termination to Contractor and his sureties.

7. Payments to Contractor. On or before the tenth day of each month during the progress of the work, Contractor shall submit to the Designer an itemized statement of all labor and materials incorporated into the improvement during the preceding month and the portion of the contract price applicable thereto.

8. Indemnification. Contractor agrees to hold City, and its officers, agents, and employees harmless from any and all liability and claims for damages for death and personal injury, and for property damage, incident to or arising out of the operations of Contractor or any subcontractor under this Agreement, and Contractor further agrees to defend City, and its officers, agents, and employees in any and all lawsuits which may be brought for such damages caused, or alleged to have been caused, by such operations. In addition, Contractor agrees to furnish to the City evidences of insurance coverage. The approval of such insurance by City shall not constitute a waiver or limitation of any rights under this indemnity agreement, regardless of whether such insurance shall be held to be inapplicable to any such damage or claims therefore.

Executed in duplicate this _____ day of _____, _____.

ATTEST:

_____

CITY OF NEVADA CITY

By: _____
(Mayor)

By: _____
(Contractor)

By: _____
(Authorized Officer)

Project Specifications

PROJECT LIMITS

Sacramento Street. As shown on the plans.

PROJECT DESCRIPTION

The project consists of sewer main replacement and connection to existing sewer services within the project limits. The sewer main that is being replaced has above ground and below ground segments of pipe on sloping terrain. Methods of installation shall be selected by the contractor, however the methods utilized shall result in minimal or no disturbance of private landscaping, fencing and hardscaping. Disposal of demolished materials, debris or excess material shall be provided by the contractor at their expense.

CONSTRUCTION NOTES

All improvements shall be constructed in accordance with the plans and details for the project and the latest edition of Caltrans Standard Plans and Standard Specifications and the Uniform Plumbing Code.

MATERIAL NOTES

PVC Gravity Sewer Piping: SDR25 for Under Ground Sewer Pipe
Ultraviolet Resistant (UVR) PVC for Above Ground Sewer Pipe

Pipe and Fittings: PVC SDR-35 shall conform to ASTM D 3034 for diameters from 4” to 15” with integral-bell gasket joints. Rubber gaskets shall be factory installed and conform to ASTM F 477. Pipe joints shall conform to ASTM D 3212. UVR PVC pipe fittings for above ground application shall be mechanical joint fittings for non-pressurized pipe.

Pipe Supports: For above ground application, pipe supports shall consists of steel supports on both sides of pipe at 6’ spacing, imbedded into the ground 3’, or at sufficient dimensions to prevent pipe deflection.

SPECIAL PROVISIONS

SEWER LINE PIPE AND FITTINGS

Contractor shall provide and install all material necessary for the project including pipe, fittings, wyes, pipe connections, pipe supports, trench resurfacing, excavation, bedding and backfill. Hydrostatic test, mandrel testing and/or television testing shall be provided as required by the City Engineer.

Trench backfill shall consist of sand bedding around pipe per Standard Specifications and trench zone backfill using native material.

SEWER CLEANOUTS

Contractor shall provide and install all material necessary for sewer lateral connections (including lateral cleanouts) under bid item for sewer laterals and for main line cleanouts under bid item for cleanouts. Cleanouts shall be installed for each building lateral and on the upstream side of any fitting with 45 degree or greater bend. Cleanouts shall be boxed to grade with a cast iron lid.

GENERAL CONDITIONS

1. Inspection of Construction

The Engineer shall have access to the work and the site of the work at all times and the Contractor shall afford such access to the Engineer and shall furnish all relevant information requested by him. At the request of the Engineer the Contractor shall open for inspection any part of the work which has been covered up, and if any part of the work has been covered up in contravention of the instructions of the Engineer, or if on being opened up, is found not to be in accordance with the terms of the contract, the expense of opening and recovering shall be charged to the Contractor. If the work has been covered up but not in contravention of such instructions and is found to be in accordance with the terms of the contract, the actual cost of opening and recovering shall be borne by the City, and in such case, if the work of opening and recovering is done by the Contractor, it shall be considered as extra work and paid for accordingly.

2. Change Orders

If for any reason it becomes necessary or desirable to change the alignment, dimensions, or design of the work, the City shall have the right to issue written change orders therefore. If the Contractor considers that any such change involves extra work, he shall immediately so notify the Engineer in writing, and shall make claim for compensation for such work not later than the first day of the month following the month in which the work was performed. If, in the opinion of the Engineer, any change order results in a change in the amount of work performed, the contract price shall be adjusted for extra work or omitted work, as the case may be.

3. Contractor's Employees and Subcontractors

The Contractor shall at all times be responsible for the adequacy and efficiency of his employees and any subcontractor and the latter's employees. All workers shall have adequate skill and experience to perform properly the work assigned to them.

4. Errors and Omissions

If the Contractor in the course of the work becomes aware of any error or omission in the contract documents, or of any discrepancy between such documents and the physical conditions of the work site, he shall immediately inform the Engineer, who shall take such action as he may deem necessary in order to rectify the matter. Any work done after such discovery and without the authorization of the Engineer will be at the Contractor's risk.

5. Guaranty of Work

For a period of one (1) year after final acceptance of the work by the City, the Contractor shall make all repairs and replacements arising out of any defective workmanship or materials. If the Contractor fails to make such repairs or replacements within ten (10) days after receiving written notice to do so, or within such further time as may be allowed by the City, the City may undertake such repairs or replacements, in which case the Contractor shall be liable to the City for the cost thereof.

6. Contractor's Responsibility for Work

The Contractor shall be responsible for the proper care and protection of the work, and of all materials delivered to the work site, until completion of the work and its final acceptance by the City.

7. Performance Bond

No Performance bond shall be required for this project.

8. Payment Bond

A payment (labor and materials) bond is required for public works contracts involving an expenditure in excess of twenty-five thousand dollars ($25,000). If the contract is in excess of this amount the contractor shall provide a payment bond to the City of Nevada City before commencement of work. Cost for the bond shall be included in the contractor bid proposal and no additional compensation will be provided.

A payment bond shall be in an amount not less than 100 percent of the total amount payable pursuant to the contract. The bond shall be in the form of a bond and not a deposit in lieu of a bond. The bond shall be executed by an admitted surety insurer.

9. Workmen's Compensation Insurance

The Contractor shall carry workmen's compensation insurance for all employees working on or about the site of the work, and if any work is subcontracted, the Contractor shall require each subcontractor to carry such insurance for all of the latter's employees, unless they are covered by the Contractor's insurance.

10. Insurance Requirements

CONTRACTOR shall purchase and maintain insurance in amounts of coverage not less than the following amounts:

General Liability: (Including operations, products and completed operations)	$1,000,000 per occurrence for bodily injury, personal injury and property damage. If Commercial General Liability Insurance or other form with a general aggregate limit is used either the general aggregate limit shall apply separately to this project/location or the general aggregate limit shall be twice the required occurrence limit.
Automobile Liability:	$1,000,000 per accident for bodily injury and property damage.

The Contractor shall deliver to the City, concurrently with the execution of the contract, certificates evidencing all insurance required by the contract, and each such certificate shall include a provision to the effect that the policy or policies cannot be canceled or materially modified unless the insurer gives the City at least fifteen (15) days written notice thereof prior to such cancellation or modification.

11. Prevailing Wages

Contractor shall pay each laborer, workman or mechanic in accordance with State and Federal Prevailing Wage Rates and the California Labor Code. These wage rates are hereby made a part of this contract:

State General Prevailing Wage Determinations in effect on date advertised
General prevailing wage determination
Journeyman and Apprentice Prevailing Wage Rates can be accessed at the following websites:
http://www.dir.ca.gov/OPRL/2017-2/PWD/index.htm and
http://www.dir.ca.gov/das/publicworks.html

Reference: Labor Code http://www.labor.ca.gov/laborlawreg.htm

Federal Prevailing Wage Determinations in effect on bid date
General Decision # CA170009 CA9
http://www.wdol.gov/wdol/scafiles/davisbacon/ca.html

Electronic Certified Payroll Records

- All contractors must furnish electronic certified payroll records to the Labor Commissioner using the online eCPR data system
- No contractor or subcontractor may be listed on a bid proposal for a public works project unless registered with the Department of Industrial Relations pursuant to Labor Code section 1725.5 [with limited exceptions from this requirement for bid purposes only under Labor Code section 1771.1(a)].
- No contractor or subcontractor may be awarded a contract for public work on a public works project unless registered with the Department of Industrial Relations pursuant to Labor Code section 1725.5.
- This project is subject to compliance monitoring and enforcement by the Department of Industrial Relations.
- The contractor shall post job site notices prescribed by regulation. (See 8 Calif. Code Reg. §16451(d)

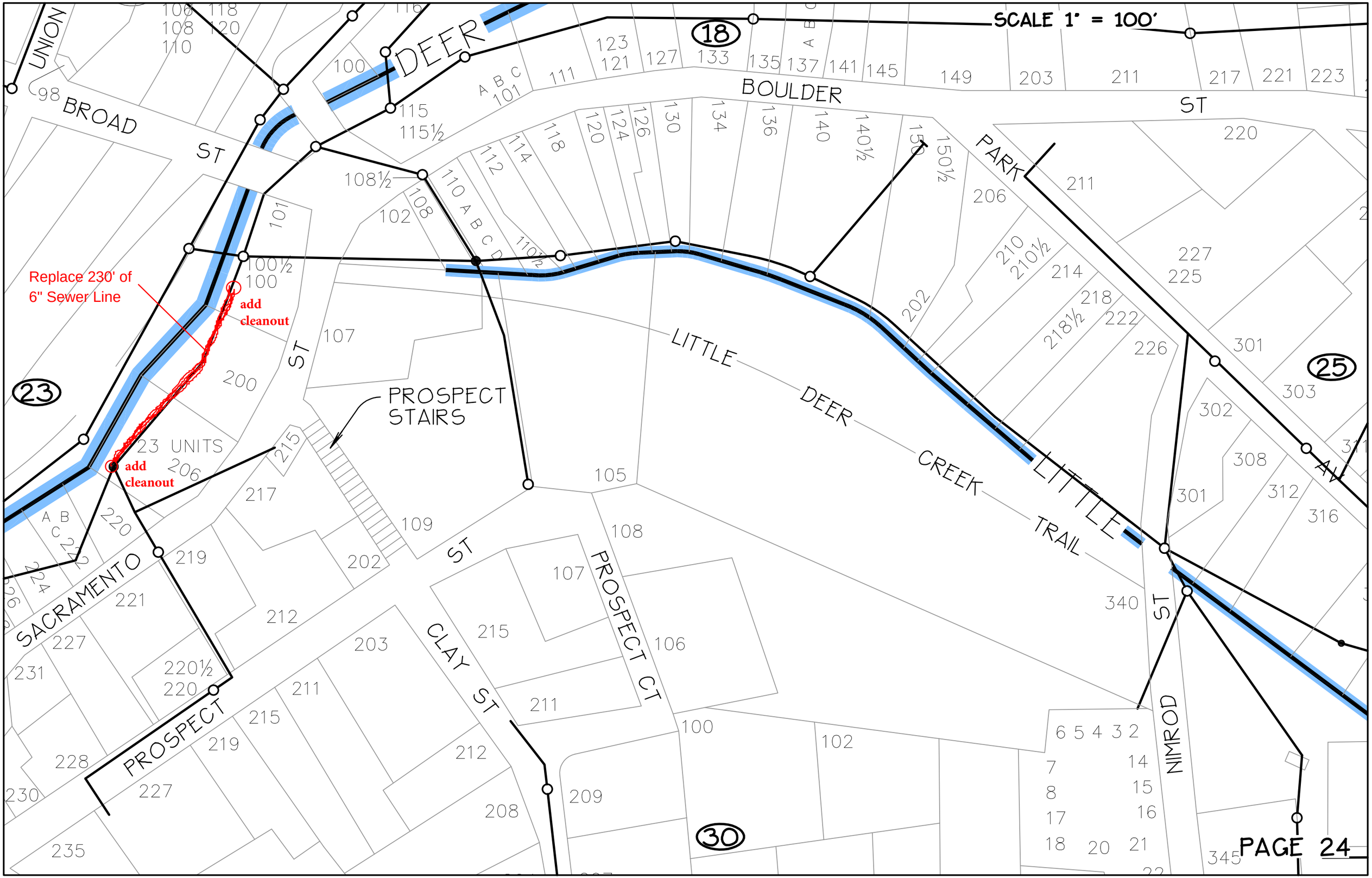
SCALE 1" = 100'
Replace 230' of
6" Sewer Line
add
cleanout
add
cleanout
UNION
BROAD
ST
DEER
BOULDER
ST
PARK
LITTLE
DEER
CREEK
TRAIL
LITTLE
PROSPECT
STAIRS
23 UNITS
SACRAMENTO
PROSPECT
CLAY ST
PROSPECT CT
NIMROD
ST
18
23
25
30
PAGE 24

CITY OF NEVADA CITY
BID OPENING RESULTS

PROJECT: Sacramento St. Sewer DATE: 29 March 2018

TIME OF BID OPENING: 3:00 A.M./P.M.

COMPANY NAME	BID AMOUNT
Hansen Bros.	$ 81,956 —
Escheman	$ 42,818 —
CME	$ 124,010 —
	$
	$
	$
	$
	$
	$
	$
	$
	$

CITY OF NEVADA CITY
BID OPENING SIGN-IN SHEET

PROJECT: Sacramento St Sewer DATE: 29 March 2018

TIME OF BID OPENING: 3:00 A.M./P.M.

ATTENDEES – Please Sign-in and Print your name

Signature	Print Name
	William J. Falconi
Phone # 916-765-1010.	
Shirley Neely	Shirley Neely
Phone # 273-3881	Hansen Bros.
	BRYAN McALLISTER
Phone # (530) 559-1326	
	LOREE MCCAY
Phone # 530 265-2496 x133	
Phone #	
Phone #	
Phone #	

RESOLUTION NO. 2018-XX

A RESOLUTION OF THE CITY COUNCIL OF THE CITY OF NEVADA CITY TO AWARD A CONTRACT TO ESCHEMAN CONSTRUCTION FOR SEWER LINE IMPROVEMENTS AT SACRAMENTO STREET IN NEVADA CITY AND AUTHORIZE MAYOR TO SIGN

WHEREAS, The City of Nevada City provides wastewater / sewer collection and treatment for residents and customers within City limits and adjacent properties where authorized for connection; and

WHEREAS, The City of Nevada City provides maintenance of the sewer collection system which includes replacement and repair of aging infrastructure; and

WHEREAS, consist with Municipal Code requirements, City staff advertised and received bids for Sewer Replacement at Sacramento Street in Nevada City.

NOW, THEREFORE, BE IT RESOLVED by the City Council of the City of Nevada City to award the contract to Escheman Construction in the amount of $42,818.63 plus $8,000.00 contingencies for Sewer Replacement at Sacramento Street in Nevada City and authorize the Mayor to sign.

PASSED AND ADOPTED at the regular meeting of the City Council of the City of Nevada City on the 11th day of April, 2018, by the following vote:

AYES:

NOES:

ABSENT:

ABSTAIN:

_____

Duane Strawser, Mayor

ATTEST:

_____

Niel Locke, City Clerk

REPORT TO CITY COUNCIL

City of Nevada City
317 Broad Street
Nevada City CA 95959
www.nevadacityca.gov

APRIL 11, 2018

TITLE: Award Of Contract For Water Replacement At Jordan Street In Nevada City

RECOMMENDATION: Pass Resolution 2018-XX Awarding a contract to C&D Contractors, Inc. in the amount of $26,530.00 plus $4,000.00 contingencies for Water Replacement at Jordan Street in Nevada City and authorize the Mayor to sign.

CONTACT: Bryan K. McAlister, City Engineer

BACKGROUND/DISCUSSION: The City Engineer and Public Works staff identified water improvements that are necessary for continued service to City residents at Jordan Street. The project consists of replacement of aging infrastructure, as further shown and described in the contract.

City staff solicited bids for Water Replacement at Jordan Street from local contractors. Bids received are as follows:

- Hansen Bros, Grass Valley CA $ 49,166.00
- Springsteen Construction, Brownsville CA $ 26,845.00
- Deschaine Enterprises, Grass Valley CA $131,750.00
- Escheman Construction, Brownsville CA $ 34,706.00
- Freschi Construction Inc, Grass Valley CA $ 35,568.00
- CME, Grass Valley CA $ 35,026.00
- C&D Contractors, Inc., Nevada City CA $ 26,330.00

C&D Contractors, Inc. was selected as the lowest responsive and responsible bidder. (Note: this is a unit price bid, therefore the unit price for bid item 3 (3 each x $900) takes precedence over the miscalculated total price of $24,530.00. We made an adjustment for this miscalculation and the total amount for C&D's bid is $26,330.00 which is the lowest qualified bid.)

FISCAL CONSIDERATIONS: The project will be funded as authorized in the fiscal year 2017/2018 water fund appropriations for water distribution.

ATTACHMENT:

- ✓ Contract for Water Replacement at Jordan Street in Nevada City
- ✓ Resolution 2018-XX

Waterline Replacement at Jordan Street

City of Nevada City, 95959
Nevada County, California

Bryan K. McAlister
PE C58570
PLS 9199

William J. Falconi
PE 25842
PLS 4911

NOTICE TO CONTRACTOR'S

WATERLINE REPLACEMENT AT JORDAN STREET

Sealed proposals for WATERLINE REPLACEMENT AT JORDAN STREET will be received by the City at City Hall, 317 Broad Street, Nevada City, California, 95959, until **3:00 PM on April 5th 2018,** at which time, or as soon thereafter as practicable, all such proposals will be publicly opened and read at City Hall, 317 Broad Street, Nevada City, California.

Bids shall be enclosed and sealed in an envelope addressed to the City of Nevada City at the above stated address and shall be marked " WATERLINE REPLACEMENT AT JORDAN STREET " No Bid Bonds are required.

The work includes the furnishing of all labor, materials, and equipment required for the job in accordance with the plans, specifications and other contract documents as set forth by the City Engineer. Such bid documents will be on file with the City staff and are available for inspection during office hours. **Bid documents may be obtained at the office of said City Hall at 317 Broad Street, Nevada City, California on or after March 26th, 2018.**

There is no mandatory pre-bid meeting for this project.

****

The City reserves the right to reject all bids; or to accept any portion of bid schedule; to reject any bid which is incomplete or irregular; to determine which proposal is, in its judgment, the lowest responsible bid of a responsible bidder and to waive any informality or minor irregularity of any bid.

DATED: March 26, 2018

CITY OF NEVADA CITY

Bryan McAlister, PE, PLS

City Engineer

PROPOSAL/CONTRACT

WATERLINE REPLACEMENT AT JORDAN STREET, Nevada City, CA

TO: City of Nevada City, City Hall, Nevada City, California.

The undersigned, as a bidder, submits the following proposal for the WATERLINE REPLACEMENT AT JORDAN STREET in the City of Nevada City, California, and offers to perform all work and furnish all labor, materials, tools, equipment as required for the completion of said project, in accordance with the plans, specifications and all other contract documents. The bidder has inspected the project site and has examined all conditions affecting the proposed work. The bidder is licensed with Contractors State License Board and is registered as a public works contractor with the Department of Industrial Relations as required to bid on this contract.

If this bid is accepted, the bidder agrees to execute the Agreement, and furnish to the City all documents and evidences of bonds and insurance, within ten (10) days after receiving written notice of the award of contract, and complete the project within twenty **(20) working days** after receiving written notice to proceed. **No bid bond is required for this project.**

Attached to this bid and made a part hereof is a list of proposed subcontractors, setting forth all information required by Section 4104 of the Government Code.

There is no pre-bid meeting scheduled for this project.

The undersigned is (state whether individual, partnership or corporation) Corporation .

DATED: 4/5/18

FIRM NAME: C & D Contractors, Inc. BY: _____
Signature of Authorized Person

ADDRESS: PO Box 822
Nevada City, CA 95959

Contact Person: David Petty

PHONE: 530-265-6938

CELL PHONE: 530-362-0812

CONTRACTOR'S #: 819680

EXPIRATION: 5/31/19

NEVADA CITY BUSINESS LICENSE #:
CD1 EXPIRATION: 2018

BID SCHEDULE

CITY OF NEVADA CITY
WATERLINE REPLACEMENT AT JORDAN STREET

No.	Quantity	Unit	Item Description	Unit Price	Total Price
1.)	1	LS	Connect to existing waterline with 2" valve	$ 1250	$ 1250
2.)	230	LF	2" PE Waterline	$ 66	$ 15180
3.)	3	EA	Connect to Existing Water Meter	$ 900	$ 900
4.)	25	TN	Asphalt Patch Paving	$ 288	$ 7200

Grand Total: $ 24,530.00

Note

1. Project shall be prevailing wages with certified payroll in compliance with CA Department of Industrial Relations requirements.

LIST OF SUBCONTRACTORS

NAME	PLACE OF BUSINESS	PORTION OF WORK
1. None.		
2.		
3.		
4.		
5.		
6.		
7.		
8.		
9.		
10.		

AGREEMENT

THIS AGREEMENT is made this _____ day of _____, between the CITY OF NEVADA CITY, a municipal corporation, hereinafter called "City," and _____, hereinafter called "Contractor."

WHEREAS, City solicited bids pertaining to the WATERLINE REPLACEMENT AT JORDAN STREET in said City: and

WHEREAS, after notice duly given, City has awarded the contract for such work to Contractor;

NOW, THEREFORE, IT IS AGREED by and between said parties as follows:

1. Scope of Work. The contractor agrees to furnish all labor, materials, tools and equipment, required to complete the improvements in Nevada City, California, in accordance with the plans, specifications and other contract representation made in mandatory meetings. All such work shall be performed in a good and workmanlike manner and to the satisfaction of the designer of said project.

2. Contract Price. As consideration for all such work, City agrees to pay to Contractor at rates as set forth on the attached bid schedule for an estimated total sum of _____ ($_____) Dollars, payable in the manner hereinafter set forth.

3. Contract Documents. The complete contract between the parties hereto consists of the Agreement, Estimate, Job Disclosure, Notice to Owner and Insurance Documentation. All of the foregoing documents are intended to cooperate, so that any work or requirement specified in any of them is to be carried out or observed the same as if mentioned in all.

4. Time for Performance. Within five (5) days after the execution of this Agreement, City shall give Contractor written Notice to Proceed, and thereafter Contractor shall commence the work and shall prosecute the same with due diligence until completion and acceptance by City; provided, however, that all such work shall be completed and ready for use within **twenty (20) working days** after Contractor receives said Notice to Proceed.

5. Extension of Time. If, because of adverse weather conditions, strikes, inability of the Contractor (through no fault on his/her part) to obtain necessary materials, or other cause beyond the reasonable control of Contractor, Contractor is unable to complete the required work within the allowed time, he shall be entitled to an extension or extensions of such time, commensurate with the unavoidable delay thus caused; provided, however that Contractor shall apply to City for approval of any such extension prior to the expiration of the time for performance as specified in the preceding paragraph.

6. Contractor's Failure to Complete Work. If Contractor fails to prosecute the work with such diligence as will insure its completion within the time hereinabove specified, or any extension thereof, or fails to complete such work within such time, or if Contractor shall otherwise violate this Agreement, City may give written notice to Contractor and his sureties of City's intention to terminate this Agreement unless, within five (5) days after services of such notice, satisfactory arrangements are made with the City for the completion of such work or the curing of such breach; and if such arrangements are not made within such time, City may, at its option, terminate this Agreement by giving written notice of such termination to Contractor and his sureties.

7. Payments to Contractor. On or before the tenth day of each month during the progress of the work, Contractor shall submit to the Designer an itemized statement of all labor and materials incorporated into the improvement during the preceding month and the portion of the contract price applicable thereto.

8. Indemnification. Contractor agrees to hold City, and its officers, agents, and employees harmless from any and all liability and claims for damages for death and personal injury, and for property damage, incident to or arising out of the operations of Contractor or any subcontractor under this Agreement, and Contractor further agrees to defend City, and its officers, agents, and employees in any and all lawsuits which may be brought for such damages caused, or alleged to have been caused, by such operations. In addition, Contractor agrees to furnish to the City evidences of insurance coverage. The approval of such insurance by City shall not constitute a waiver or limitation of any rights under this indemnity agreement, regardless of whether such insurance shall be held to be inapplicable to any such damage or claims therefore.

Executed in duplicate this _____ day of _____, _____.

ATTEST:

_____

CITY OF NEVADA CITY

By: _____
(Mayor)

By: _____
(Contractor)

By: _____
(Authorized Officer)

GENERAL CONDITIONS

1. Inspection of Construction

The Engineer shall have access to the work and the site of the work at all times and the Contractor shall afford such access to the Engineer and shall furnish all relevant information requested by him. At the request of the Engineer the Contractor shall open for inspection any part of the work which has been covered up, and if any part of the work has been covered up in contravention of the instructions of the Engineer, or if on being opened up, is found not to be in accordance with the terms of the contract, the expense of opening and recovering shall be charged to the Contractor. If the work has been covered up but not in contravention of such instructions and is found to be in accordance with the terms of the contract, the actual cost of opening and recovering shall be borne by the City, and in such case, if the work of opening and recovering is done by the Contractor, it shall be considered as extra work and paid for accordingly.

2. Change Orders

If for any reason it becomes necessary or desirable to change the alignment, dimensions, or design of the work, the City shall have the right to issue written change orders therefore. If the Contractor considers that any such change involves extra work, he shall immediately so notify the Engineer in writing, and shall make claim for compensation for such work not later than the first day of the month following the month in which the work was performed. If, in the opinion of the Engineer, any change order results in a change in the amount of work performed, the contract price shall be adjusted for extra work or omitted work, as the case may be.

3. Contractor's Employees and Subcontractors

The Contractor shall at all times be responsible for the adequacy and efficiency of his employees and any subcontractor and the latter's employees. All workers shall have adequate skill and experience to perform properly the work assigned to them.

4. Errors and Omissions

If the Contractor in the course of the work becomes aware of any error or omission in the contract documents, or of any discrepancy between such documents and the physical conditions of the work site, he shall immediately inform the Engineer, who shall take such action as he may deem necessary in order to rectify the matter. Any work done after such discovery and without the authorization of the Engineer will be at the Contractor's risk.

5. Guaranty of Work

For a period of one (1) year after final acceptance of the work by the City, the Contractor shall make all repairs and replacements arising out of any defective workmanship or materials. If the Contractor fails to make such repairs or replacements within ten (10) days after receiving written notice to do so, or within such further time as may be allowed by the City, the City may undertake such repairs or replacements, in which case the Contractor shall be liable to the City for the cost thereof.

6. Contractor's Responsibility for Work

The Contractor shall be responsible for the proper care and protection of the work, and of all materials delivered to the work site, until completion of the work and its final acceptance by the City.

7. Performance Bond

No Performance bond shall be required for this project.

8. Payment Bond

A payment (labor and materials) bond is required for public works contracts involving an expenditure in excess of twenty-five thousand dollars ($25,000). If the contract is in excess of this amount the contractor shall provide a payment bond to the City of Nevada City before commencement of work. Cost for the bond shall be included in the contractor bid proposal and no additional compensation will be provided.

A payment bond shall be in an amount not less than 100 percent of the total amount payable pursuant to the contract. The bond shall be in the form of a bond and not a deposit in lieu of a bond. The bond shall be executed by an admitted surety insurer.

9. Workmen's Compensation Insurance

The Contractor shall carry workmen's compensation insurance for all employees working on or about the site of the work, and if any work is subcontracted, the Contractor shall require each subcontractor to carry such insurance for all of the latter's employees, unless they are covered by the Contractor's insurance.

10. Insurance Requirements

CONTRACTOR shall purchase and maintain insurance in amounts of coverage not less than the following amounts:

General Liability: (Including operations, products and completed operations)	$1,000,000 per occurrence for bodily injury, personal injury and property damage. If Commercial General Liability Insurance or other form with a general aggregate limit is used either the general aggregate limit shall apply separately to this project/location or the general aggregate limit shall be twice the required occurrence limit.
Automobile Liability:	$1,000,000 per accident for bodily injury and property damage.

The Contractor shall deliver to the City, concurrently with the execution of the contract, certificates evidencing all insurance required by the contract, and each such certificate shall include a provision to the effect that the policy or policies cannot be canceled or materially modified unless the insurer gives the City at least fifteen (15) days written notice thereof prior to such cancellation or modification.

11. Prevailing Wages

Contractor shall pay each laborer, workman or mechanic in accordance with State and Federal Prevailing Wage Rates and the California Labor Code. These wage rates are hereby made a part of this contract:

State General Prevailing Wage Determinations in effect on date advertised
General prevailing wage determination
Journeyman and Apprentice Prevailing Wage Rates can be accessed at the following websites:
http://www.dir.ca.gov/OPRL/2017-2/PWD/index.htm and
http://www.dir.ca.gov/das/publicworks.html

Reference: Labor Code http://www.labor.ca.gov/laborlawreg.htm

Federal Prevailing Wage Determinations in effect on bid date
General Decision # CA170009 CA9
http://www.wdol.gov/wdol/scafiles/davisbacon/ca.html

Electronic Certified Payroll Records

- All contractors must furnish electronic certified payroll records to the Labor Commissioner using the online eCPR data system
- No contractor or subcontractor may be listed on a bid proposal for a public works project unless registered with the Department of Industrial Relations pursuant to Labor Code section 1725.5 [with limited exceptions from this requirement for bid purposes only under Labor Code section 1771.1(a)].
- No contractor or subcontractor may be awarded a contract for public work on a public works project unless registered with the Department of Industrial Relations pursuant to Labor Code section 1725.5.
- This project is subject to compliance monitoring and enforcement by the Department of Industrial Relations.
- The contractor shall post job site notices prescribed by regulation. (See 8 Calif. Code Reg. §16451(d)

PROJECT SPECIFICATIONS

PROJECT LIMITS

As shown on the attached site plan.

PROJECT DESCRIPTION

The project consists of waterline replacement, as further shown and described on the attached exhibits:

1. Sawcut, trench and install 2" water main
2. Connect to existing water service with 1" service
3. Trench patch pave T-section

Contractor shall be responsible for removal and disposal of debris, traffic control, testing, flushing and coordination of tie-in pipe connections.

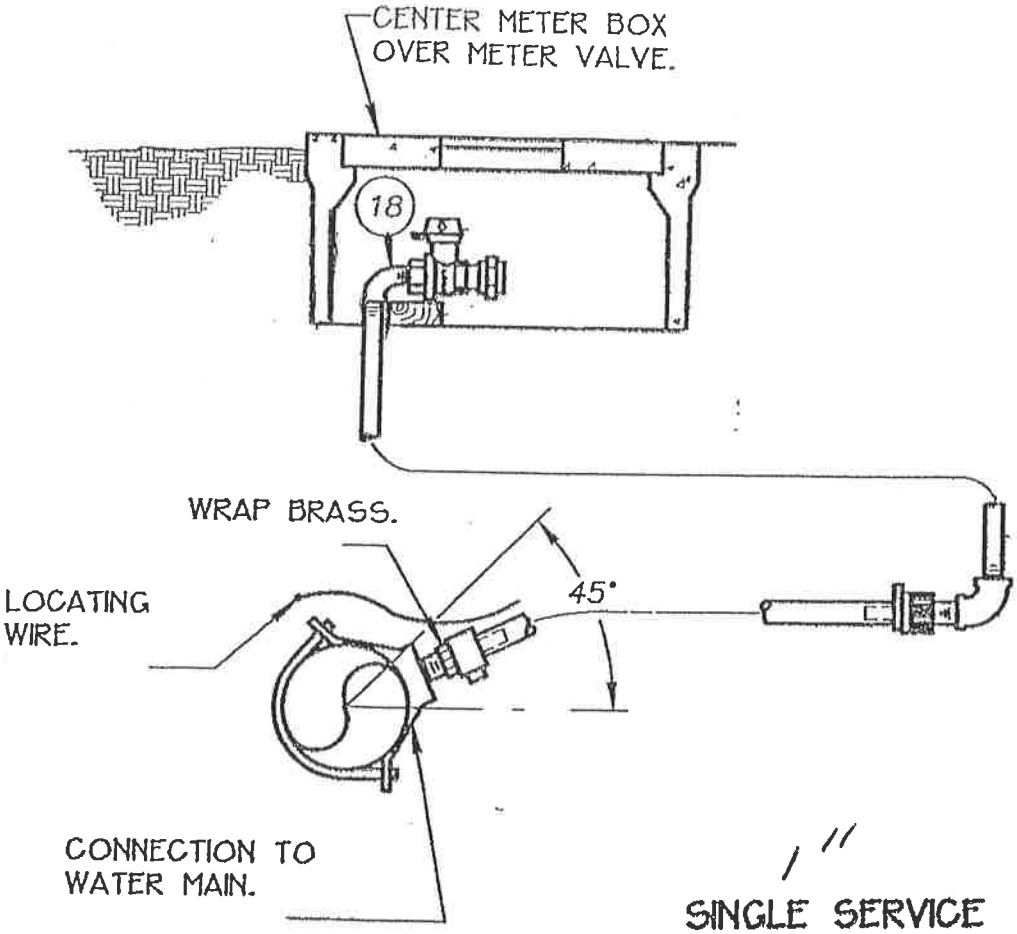

1"
SINGLE SERVICE

Notes:

1) All Fitting are 1"

2) Use PC200 (IDR7) Polyethlene Pipe

3)

4)

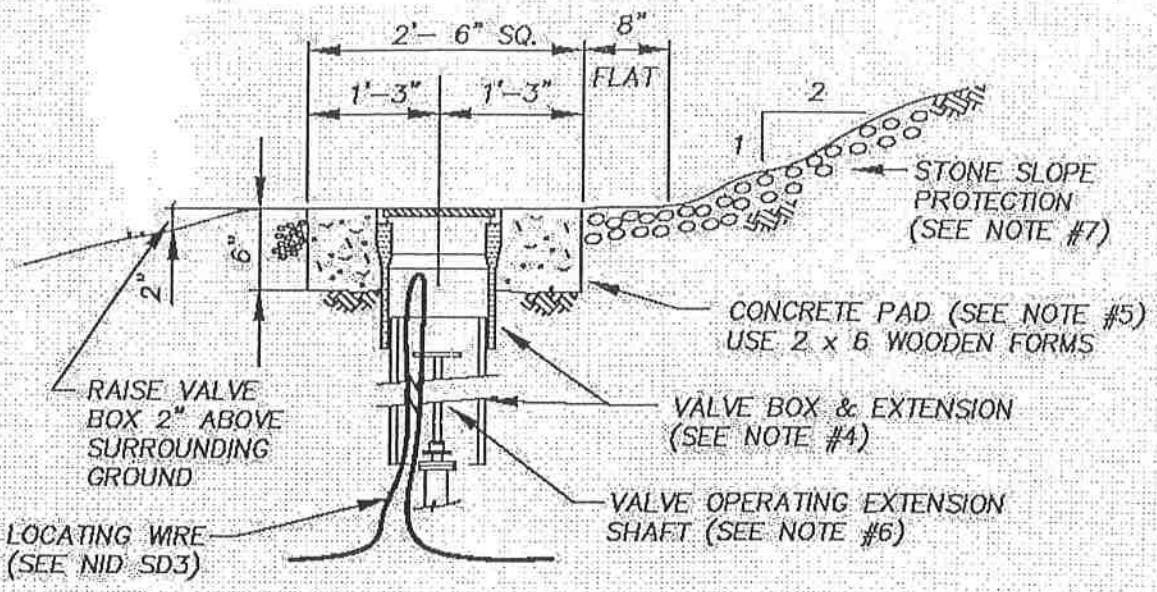

OUTSIDE ROAD ASSEMBLY

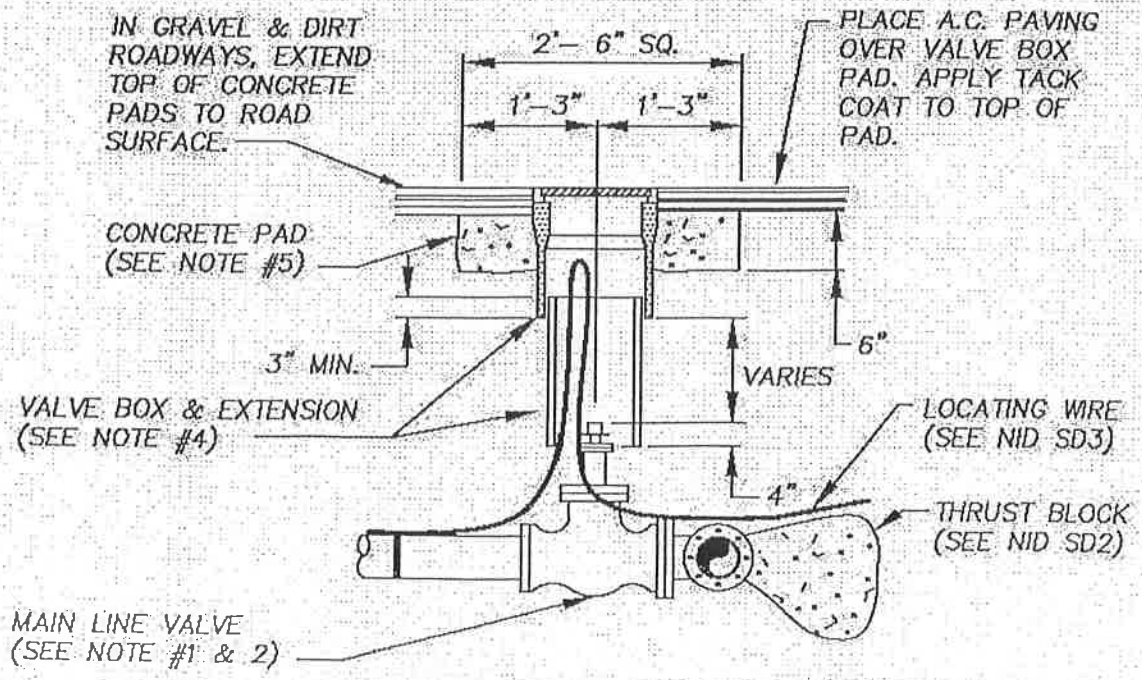

INSIDE ROAD ASSEMBLY

MAINLINE VALVE ASSEMBLY

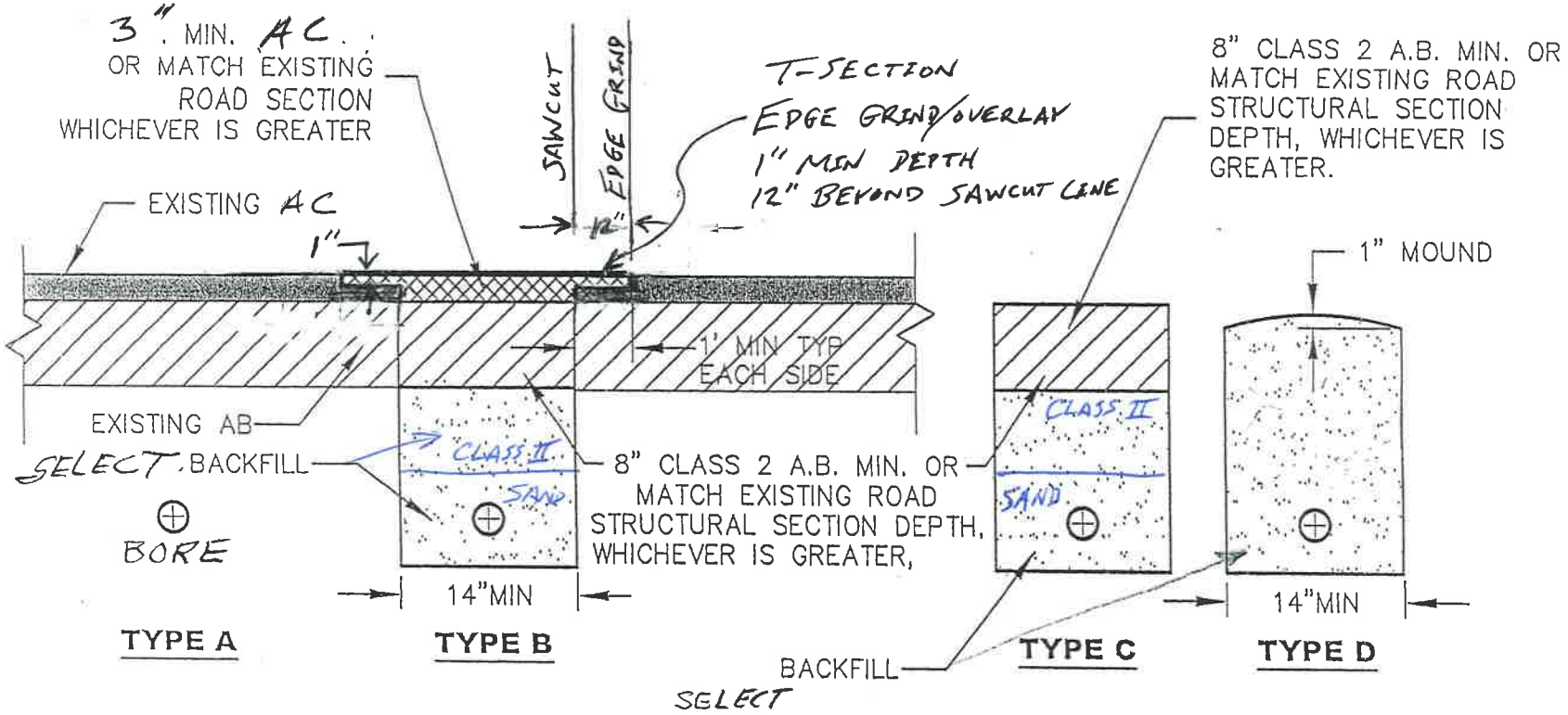

TYPE A: PAVEMENT SURFACES LESS THAN 5 YEARS OLD, SURFACE TREATMENTS LESS THAN 3 YEARS OLD, & MAJOR THOROUGHFARES WITH HIGH QUALITY RIDING SURFACES

TYPE B: PAVEMENT GREATER THAN 5 YEARS OLD

TYPE C: UNSURFACED ROAD SHOULDER OR OTHER AREAS SUBJECT TO TRAFFIC LOADS

TYPE D: OUTSIDE ROADWAY, NOT SUBJECT TO TRAFFIC LOADS

DEPARTMENT OF PUBLIC WORKS

TRANSVERSE TRENCH RESURFACING SECTIONS

DATE:

SCALE: NOT TO SCALE

PLATE

2018 JORDAN STREET
WATER IMPROVEMENTS

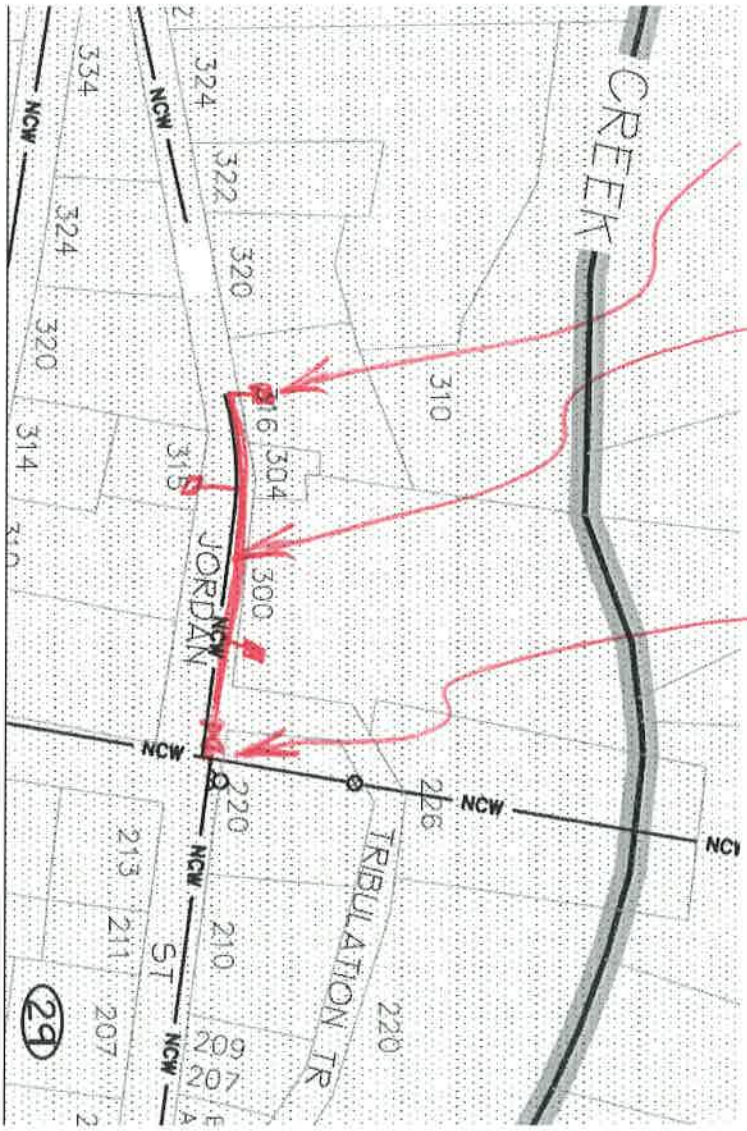

3 EA
CONNECT TO EXISTING WATER METERS (TYPICAL)

(230 LF)
INSTALL 2" WATERLINE TO REPLACE EXISTING 3/4" LINE

(1 EA)
CONNECT NEW 2" TO EXISTING 6" WATER PROVIDE 2" VALVE

CITY OF NEVADA CITY
BID OPENING RESULTS

PROJECT: Jordan St. Waterline Replacement DATE: 4/5/18

TIME OF BID OPENING: 3:00 A.M./P.M.

COMPANY NAME	BID AMOUNT
Hanson Bros.	$ 49,166 —
Springsteen	$ 26,845 —
DeShaine	$ 131,750 —
Escheman	$ 34,706 —
Freschi	$ 35,568 —
CME	$ 35,026 —
C & D	$ 24,530 —
	$
	$
	$
	$
	$

CITY OF NEVADA CITY
BID OPENING SIGN-IN SHEET

Jordan St.

PROJECT: Water line Replacement DATE: 4/5/18

TIME OF BID OPENING: 3:00 A.M./P.M.

ATTENDEES – Please Sign-in and Print your name

Signature	Print Name
530-274-8060 (Phone #)	LOREE MCCAY
530-277-0278 (Phone #)	William Highsmith
273-3381 (Phone #)	Shirley Neely
916-762-1010 (Phone #)	William J. Falconi

RESOLUTION NO. 2018-XX

A RESOLUTION OF THE CITY COUNCIL OF THE CITY OF NEVADA CITY TO AWARD A CONTRACT TO C&D CONTRACTORS, INC. FOR WATER REPLACEMENT AT JORDAN STREET IN NEVADA CITY AND AUTHORIZE MAYOR TO SIGN

WHEREAS, The City of Nevada City provides water service to residents and customers within City limits and adjacent properties not within NID's District boundary; and

WHEREAS, The City of Nevada City provides maintenance of the water distribution system which includes replacement and repair of aging infrastructure; and

WHEREAS, consist with Municipal Code requirements, City staff advertised and received bids for Water Replacement at Jordan Street in Nevada City.

NOW, THEREFORE, BE IT RESOLVED by the City Council of the City of Nevada City to award the contract to C&D Contractors, Inc. in the amount of $26,530.00 plus $4,000.00 contingencies for Water Replacement at Jordan Street in Nevada City in Nevada City and authorize the Mayor to sign.

PASSED AND ADOPTED at the regular meeting of the City Council of the City of Nevada City on the 11th day of April, 2018, by the following vote:

AYES:

NOES:

ABSENT:

ABSTAIN:

_____

Duane Strawser, Mayor

ATTEST:

_____

Niel Locke, City Clerk

REPORT TO CITY COUNCIL

City of Nevada City
317 Broad Street
Nevada City CA 95959
www.nevadacityca.gov

APRIL 11, 2018

TITLE: A Resolution Of The City Council Of Nevada City To Adopt A Determination Of A CalPERS Member's Industrial Disability Retirement For Police Officer Shane Franssen

RECOMMENDATION: Pass Resolution 2018-XX to adopt a determination of CalPERS member's industrial disability retirement for Police Officer Shane Franssen.

CONTACT: Loree' McCay, Administrative Services Manager

BACKGROUND / DISCUSSION:
The City was informed that the prior Resolution 2018-06 was invalid and a revised resolution including specific verbiage was required by CalPERS in order to accept the City's Determination.

Mr. Franssen became a Reserve Officer for the Nevada City Police Department (NCPD) on February 19, 2004. He became a full-time officer February 10, 2010. Mr. Franssen experienced an injury to his right knee while on duty on March 28, 2016 and underwent surgery August 9, 2017. He has been allowed to return to light duty but has remained on short term disability and hasn't returned to work.

The basis for Mr. Franssen's Industrial Disability Retirement is confirmed by medical reports from Stephen P. Abelow, M.D. that permanent restrictions will likely include no running, jumping or physical restraints and has been told he will not be able to return to work as a Police Officer. Accordingly, Mr. Franssen is incapacitated within the meaning of the Public Employee's Retirement Law for the performance of his usual and customary duties in the position of Police Officer.

Under State Law, the City Council is required to adopt a Resolution determining that competent medical evidence supports granting of an Industrial Disability Retirement. Based on medical evidence staff is recommending adoption of Resolution 2018-XX approving the CalPERS Industrial Retirement for Shane Franssen to be effective April 21, 2018.

ENVIRONMENTAL CONSIDERATIONS: Not applicable.

FISCAL IMPACT: Not applicable.

ATTACHMENTS:
- ✓ Resolution 2018-XX – A Resolution of the City of Nevada City to Adopt a Determination of a CalPERS Member's Industrial Disability Retirement for Police Officer Shane Franssen
- ✓ Prior Resolution 2018-06 with Markups

RESOLUTION NO. 2018-XX

A RESOLUTION OF THE CITY COUNCIL OF NEVADA CITY TO ADOPT A DETERMINATION OF A CALPERS MEMBER'S INDUSTRIAL DISABILITY RETIREMENT FOR POLICE OFFICER SHANE FRANSSEN

WHEREAS, the City of Nevada City is a contracting agency of the California Public Employees' Retirement System (CalPERS); and

WHEREAS, the California Public Employees' Retirement Law requires that a contracting agency determine whether an employee of such agency in employment in which he is classified as a local safety member is disabled for purposes of the California Employees' Retirement Law and whether such disability is "industrial" within the meaning of such Law; and

WHEREAS, an application for industrial disability retirement of permanently injured right knee arising out of and in the course of employment from Shane Franssen employed by the City of Nevada City in the position of Police Officer has been filed with CalPERS; and

WHEREAS, the City of Nevada City has reviewed the medical and other evidence relevant to such alleged disability.

NOW, THEREFORE, BE IT RESOLVED, that the City of Nevada City find and determine and it does hereby certify under penalty of perjury that the determination was made based on competent medical opinion and determined that Shane Franssen is substantially incapacitated within the meaning of the California Public Employees' Retirement Law for performance of his duties in the position of Police Officer; and

BE IT FURTHER RESOLVED, that the City of Nevada City certifies under penalty of perjury that the determination was not used as a substitute for the disciplinary process; and,

BE IT FURTHER RESOLVED, that the Shane Franssen has filed a Worker's Compensation claim against the City of Nevada City for his injury which was determined to be the cause of his disabling condition and the claim was accepted; and,

BE IT FURTHER RESOLVED, that the City of Nevada City find and determine and it does hereby find and determine that such disability is a result of injury or disease arising out of and in the course of employment and that there is not the possibility of a third-party liability present and that neither said Shane Franssen nor the agency City of Nevada City, applied to the Workers' Compensation Appeals Board for a determination pursuant to G.C. Section 21166 whether such disability is industrial; and

BE IT FURTHER RESOLVED, that the City of Nevada City does find and determine that there is competent medical opinion certifying that the disability is expected to be permanent; and,

BE IT FURTHER RESOLVED, that the member will be, separated from his employment in the position of Police Officer after expiration of his rights under Section 21164 Government Code, effective April 21st, 2018 and that no dispute as to the expiration of such leave rights is pending. His last day on pay status was April 20th, 2018.

BE IT FURTHER RESOLVED, that the member will be paid Advance Disability Pension Payments (ADPP) in the monthly amount of $2,563.00, beginning on the 20th day of May, 2018. Reimbursement checks should be made payable to the City of Nevada City and delivered to 317 Broad Street, Nevada City, California 95959.

PASSED AND ADOPTED at a regular scheduled meeting of the City Council held on this 11th day of April by the following vote:

AYES:
NOES:
ABSENT:
ABSTAIN:

_____
Duane Strawser

ATTEST:

_____
Niel Locke, City Clerk

RESOLUTION NO. 2018-XX

A RESOLUTION OF THE CITY COUNCIL OF NEVADA CITY TO ADOPT A DETERMINATION OF A CALPERS MEMBER'S INDUSTRIAL DISABILITY RETIREMENT FOR POLICE OFFICER ~~GARY SCOTT CLENDENEN~~SHANE FRANSSEN

WHEREAS, the City of Nevada City is a contracting agency of the California Public Employees' Retirement System (CalPERS); and

WHEREAS, the California Public Employees' Retirement Law requires that a contracting agency determine whether an employee of such agency in employment in which he is classified as a local safety member is disabled for purposes of the California Employees' Retirement Law and whether such disability is "industrial" within the meaning of such Law; and

WHEREAS, an application for industrial disability retirement of permanently injured ~~left~~ right knee arising out of and in the course of employment from ~~Gary Scott Clendenen~~Shane Franssen employed by the City of Nevada City in the position of Police Officer has been filed with CalPERS; and

WHEREAS, the City of Nevada City has reviewed the medical and other evidence relevant to such alleged disability.

NOW, THEREFORE, BE IT RESOLVED, that the City of Nevada City find and determine and it does hereby ~~find~~ certify under penalty of perjury that the determination was made based on competent medical opinion and determined that ~~Gary Scott Clendenen~~ Shane Franssen is substantially incapacitated within the meaning of the California Public Employees' Retirement Law for performance of his duties in the position of Police Officer; and

BE IT FURTHER RESOLVED, that the City of Nevada City certifies under penalty of perjury that the determination was not used as a substitute for the disciplinary process; and,

BE IT FURTHER RESOLVED, that the Shane Franssen has filed a Worker's Compensation claim against the City of Nevada City for his injury which was determined to be the cause of his disabling condition and the claim was accepted; and,

BE IT FURTHER RESOLVED, that the City of Nevada City find and determine and it does hereby find and determine that such disability is a result of injury or disease arising out of and in the course of employment and that there is not the possibility of a third-party liability present and that~~.~~ n~~N~~either said ~~Gary Scott Clendenen~~Shane Franssen nor the agency City of Nevada City, applied to the Workers' Compensation Appeals Board for a determination pursuant to G.C. Section 21166 whether such disability is industrial; and

BE IT FURTHER RESOLVED, that the City of Nevada City does find and determine that there is competent medical opinion certifying that the disability is expected to be permanent; and,

BE IT FURTHER RESOLVED, that the member will be, separated from his employment in the position of Police Officer after expiration of his rights under Section 21164 Government

Formatted: Indent: First line: 0.5"

Formatted: Indent: First line: 0.5"

Code, effective ~~March 24~~April 21st, 2018 and that no dispute as to the expiration of such leave rights is pending. His last day on pay status was ~~March 23~~April 20th, 2018.

BE IT FURTHER RESOLVED, that the member will be paid Advance Disability Pension Payments (ADPP) in the monthly amount of $2,563.00, beginning on the 20th day of May, 2018. Reimbursement checks should be made payable to the City of Nevada City and delivered to 317 Broad Street, Nevada City, California 95959.

PASSED AND ADOPTED at a regular scheduled meeting of the City Council held on this ~~14th~~ 11th day of ~~February~~ April by the following vote:

AYES:
NOES:
ABSENT:
ABSTAIN:

_____
Duane Strawser

ATTEST:

_____
Niel Locke, City Clerk

Formatted: Superscript

Formatted: Indent: First line: 0.5"

Formatted: Superscript

REPORT TO CITY COUNCIL

City of Nevada City
317 Broad Street
Nevada City CA 95959
www.nevadacityca.gov

APRIL 11, 2018

TITLE: A Resolution Of The City Council Of Nevada City To Adopt A Determination Of A CalPERS Member's Industrial Disability Retirement For Police Officer Gary Scott Clendenen

RECOMMENDATION: Pass Resolution 2018-XX to adopt a determination of CalPERS member's industrial disability retirement for Police Officer Gary Scott Clendenen.

CONTACT: Loree' McCay, Administrative Services Manager

BACKGROUND / DISCUSSION:
The City was informed that the prior Resolution 2018-07 was invalid and a revised resolution including specific verbiage was required by CalPERS in order to accept the City's Determination.

Mr. Clendenen became a Reserve Officer for the Nevada City Police Department (NCPD) on December 17, 2013. He became a full-time officer August 28, 2014. Mr. Clendenen experienced an injury to his left knee while on duty on August 3, 2016, underwent surgery May 17, 2017 and has been working modified light duty since.

The basis for Mr. Clendenen's Industrial Disability Retirement is confirmed by medical reports from Randall K. Schaefer, M.D. that permanent restrictions will likely include no running, jumping or physical restraints and has been told he will not be able to return to work as a Police Officer. Accordingly, Mr. Clendenen is incapacitated within the meaning of the Public Employee's Retirement Law for the performance of his usual and customary duties in the position of Police Officer.

Under State Law, the City Council is required to adopt a Resolution determining that competent medical evidence supports granting of an Industrial Disability Retirement. Based on medical evidence staff is recommending adoption of Resolution 2018-XX approving the CalPERS Industrial Retirement for Gary Scott Clendenen to be effective March 24, 2018.

ENVIRONMENTAL CONSIDERATIONS: Not applicable.

FISCAL IMPACT: Not applicable.

ATTACHMENTS:
- ✓ Resolution 2018-XX – A Resolution of the City of Nevada City to Adopt a Determination of a CalPERS Member's Industrial Disability Retirement for Police Officer Gary Scott Clendenen
- ✓ Prior Resolution 2018-07 with Markups

RESOLUTION NO. 2018-XX

A RESOLUTION OF THE CITY COUNCIL OF NEVADA CITY TO ADOPT A DETERMINATION OF A CALPERS MEMBER'S INDUSTRIAL DISABILITY RETIREMENT FOR POLICE OFFICER GARY SCOTT CLENDENEN

WHEREAS, the City of Nevada City is a contracting agency of the California Public Employees' Retirement System (CalPERS); and

WHEREAS, the California Public Employees' Retirement Law requires that a contracting agency determine whether an employee of such agency in employment in which he is classified as a local safety member is disabled for purposes of the California Employees' Retirement Law and whether such disability is "industrial" within the meaning of such Law; and

WHEREAS, an application for industrial disability retirement of permanently injured left knee arising out of and in the course of employment from Gary Scott Clendenen employed by the City of Nevada City in the position of Police Officer has been filed with CalPERS; and

WHEREAS, the City of Nevada City has reviewed the medical and other evidence relevant to such alleged disability.

NOW, THEREFORE, BE IT RESOLVED, that the City of Nevada City find and determine and it does hereby certify under penalty of perjury that the determination was made based on competent medical opinion and determined that Gary Scott Clendenen is substantially incapacitated within the meaning of the California Public Employees' Retirement Law for performance of his duties in the position of Police Officer; and

BE IT FURTHER RESOLVED, that the City of Nevada City certifies under penalty of perjury that the determination was not used as a substitute for the disciplinary process; and,

BE IT FURTHER RESOLVED, that the Gary Scott Clendenen has filed a Worker's Compensation claim against the City of Nevada City for his injury which was determined to be the cause of his disabling condition and the claim was accepted; and,

BE IT FURTHER RESOLVED, that the City of Nevada City find and determine and it does hereby find and determine that such disability is a result of injury or disease arising out of and in the course of employment and that there is not the possibility of a third-party liability present and that neither said Gary Scott Clendenen nor the agency City of Nevada City, applied to the Workers' Compensation Appeals Board for a determination pursuant to G.C. Section 21166 whether such disability is industrial; and

BE IT FURTHER RESOLVED, that the City of Nevada City does find and determine that there is competent medical opinion certifying that the disability is expected to be permanent; and,

BE IT FURTHER RESOLVED, that the member will be, separated from his employment in the position of Police Officer after expiration of his rights under Section 21164 Government Code, effective March 24, 2018 and that no dispute as to the expiration of such leave rights is pending. His last day on pay status was March 23, 2018.

BE IT FURTHER RESOLVED, that the member will be paid Advance Disability Pension Payments (ADPP) in the monthly amount of $2,563.00, beginning on the 23rd day of April, 2018. Reimbursement checks should be made payable to the City of Nevada City and delivered to 317 Broad Street, Nevada City, California 95959.

PASSED AND ADOPTED at a regular scheduled meeting of the City Council held on this 11th day of April by the following vote:

AYES:

NOES:

ABSENT:

ABSTAIN:

_____
Duane Strawser

ATTEST:

_____
Niel Locke, City Clerk

RESOLUTION NO. 2018-XX

A RESOLUTION OF THE CITY COUNCIL OF NEVADA CITY TO ADOPT A DETERMINATION OF A CALPERS MEMBER'S INDUSTRIAL DISABILITY RETIREMENT FOR POLICE OFFICER GARY SCOTT CLENDENEN

WHEREAS, the City of Nevada City is a contracting agency of the California Public Employees' Retirement System (CalPERS); and

WHEREAS, the California Public Employees' Retirement Law requires that a contracting agency determine whether an employee of such agency in employment in which he is classified as a local safety member is disabled for purposes of the California Employees' Retirement Law and whether such disability is "industrial" within the meaning of such Law; and

WHEREAS, an application for industrial disability retirement of permanently injured left knee arising out of and in the course of employment from Gary Scott Clendenen employed by the City of Nevada City in the position of Police Officer has been filed with CalPERS; and

WHEREAS, the City of Nevada City has reviewed the medical and other evidence relevant to such alleged disability.

NOW, THEREFORE, BE IT RESOLVED, that the City of Nevada City find and determine and it does hereby ~~find~~ certify under penalty of perjury that the determination was made based on competent medical opinion and determined that Gary Scott Clendenen is substantially incapacitated within the meaning of the California Public Employees' Retirement Law for performance of his duties in the position of Police Officer; and

BE IT FURTHER RESOLVED, that the City of Nevada City certifies under penalty of perjury that the determination was not used as a substitute for the disciplinary process; and,

Formatted: Indent: First line: 0.5"

BE IT FURTHER RESOLVED, that the Gary Scott Clendenen has filed a Worker's Compensation claim against the City of Nevada City for his injury which was determined to be the cause of his disabling condition and the claim was accepted; and,

BE IT FURTHER RESOLVED, that the City of Nevada City find and determine and it does hereby find and determine that such disability is a result of injury or disease arising out of and in the course of employment and that there is not the possibility of a third-party liability present and that~~.~~ n~~N~~either said Gary Scott Clendenen nor the agency City of Nevada City, applied to the Workers' Compensation Appeals Board for a determination pursuant to G.C. Section 21166 whether such disability is industrial; and

BE IT FURTHER RESOLVED, that the City of Nevada City does find and determine that there is competent medical opinion certifying that the disability is expected to be permanent; and,

Formatted: Indent: First line: 0.5"

BE IT FURTHER RESOLVED, that the member will be, separated from his employment in the position of Police Officer after expiration of his rights under Section 21164 Government Code, effective March 24, 2018 and that no dispute as to the expiration of such leave rights is pending. His last day on pay status was March 23, 2018.

BE IT FURTHER RESOLVED, that the member will be paid Advance Disability Pension Payments (ADPP) in the monthly amount of $2,563.00, beginning on the 23rd day of April, 2018. Reimbursement checks should be made payable to the City of Nevada City and delivered to 317 Broad Street, Nevada City, California 95959.

PASSED AND ADOPTED at a regular scheduled meeting of the City Council held on this ~~14th~~ 11th day of ~~February~~ April by the following vote:

AYES:
NOES:
ABSENT:
ABSTAIN:

_____
Duane Strawser

ATTEST:

_____
Niel Locke, City Clerk

Formatted: Indent: First line: 0.5"

Formatted: Superscript

REPORT TO CITY COUNCIL

City of Nevada City
317 Broad Street
Nevada City CA 95959
www.nevadacityca.gov

APRIL 11, 2018

TITLE: Award Of Contract For Water Repairs At 317 Broad Street In Nevada City

RECOMMENDATION: Pass Resolution 2018-XX Awarding a contract to Springsteen Construction in the amount of $10,104.00 plus $2,000.00 contingencies for Water Repairs at 317 Broad Street in Nevada City and authorize the Mayor to sign.

CONTACT: Bryan K. McAlister, City Engineer

BACKGROUND/DISCUSSION: The City Engineer and Public Works staff identified water improvements that are necessary at 317 Broad Street (City Hall). The project consists of replacement of aging infrastructure including removal and replacement of a fire hydrant and valve, as further shown and described in the contract.

City staff solicited bids for Water Repairs at 317 Broad Street from local contractors. Bids received are as follows:

- Springsteen Construction, Brownsville CA $ 10,104.00
- CME, Grass Valley CA $ 17,074.00
- C&D Contractors, Inc., Nevada City CA $ 18,536.00

Springsteen Construction was selected as the lowest responsive and responsible bidder.

FISCAL CONSIDERATIONS: The project will be funded as authorized in the fiscal year 2017/2018 water fund appropriations for water distribution.

ATTACHMENT:

- ✓ Contract for Water Repairs at 317 Broad Street in Nevada City
- ✓ Resolution 2018-XX

Waterline Repairs
at 317 Broad Street

City of Nevada City, 95959
Nevada County, California

Bryan K. McAlister
PE C58570
PLS 9199

William J. Falconi
PE 25842
PLS 4911

NOTICE TO CONTRACTOR'S

WATERLINE REPAIRS AT 317 BROAD STREET

Sealed proposals for WATERLINE REPAIRS AT 317 BROAD STREET will be received by the City at City Hall, 317 Broad Street, Nevada City, California, 95959, until **9:00 AM on March 26th 2018,** at which time, or as soon thereafter as practicable, all such proposals will be publicly opened and read at City Hall, 317 Broad Street, Nevada City, California.

Bids shall be enclosed and sealed in an envelope addressed to the City of Nevada City at the above stated address and shall be marked " WATERLINE REPAIRS AT 317 BROAD STREET" No Bid Bonds are required.

The work includes the furnishing of all labor, materials, and equipment required for the job in accordance with the plans, specifications and other contract documents as set forth by the City Engineer. Such bid documents will be on file with the City staff and are available for inspection during office hours. **Bid documents may be obtained at the office of said City Hall at 317 Broad Street, Nevada City, California on or after March 1ST, 2018.**

There is no mandatory pre-bid meeting for this project.

****

The City reserves the right to reject all bids; or to accept any portion of bid schedule; to reject any bid which is incomplete or irregular; to determine which proposal is, in its judgment, the lowest responsible bid of a responsible bidder and to waive any informality or minor irregularity of any bid.

DATED: March 1, 2018 CITY OF NEVADA CITY

_____

Bryan McAlister, PE, PLS

City Engineer

PROPOSAL/CONTRACT

WATERLINE REPAIRS AT 317 BROAD STREET, Nevada City, CA

TO: City of Nevada City, City Hall, Nevada City, California.

The undersigned, as a bidder, submits the following proposal for the WATERLINE REPAIRS AT 317 BROAD STREET in the City of Nevada City, California, and offers to perform all work and furnish all labor, materials, tools, equipment as required for the completion of said project, in accordance with the plans, specifications and all other contract documents. The bidder has inspected the project site and has examined all conditions affecting the proposed work. The bidder is licensed with Contractors State License Board and is registered as a public works contractor with the Department of Industrial Relations as required to bid on this contract.

If this bid is accepted, the bidder agrees to execute the Agreement, and furnish to the City all documents and evidences of bonds and insurance, within ten (10) days after receiving written notice of the award of contract, and complete the project within twenty **(20) working days** after receiving written notice to proceed. **No bid bond is required for this project.**

Attached to this bid and made a part hereof is a list of proposed subcontractors, setting forth all information required by Section 4104 of the Government Code.

There is no pre-bid meeting scheduled for this project.

_____

The undersigned is (state whether individual, partnership or corporation)_____.

DATED:_____

FIRM NAME:_____

BY:_____
Signature of Authorized Person

ADDRESS:_____

_____

Contact Person:_____

PHONE: _____

CELL PHONE: _____

CONTRACTOR'S #:_____

EXPIRATION: _____

NEVADA CITY BUSINESS LICENSE #:

_____ EXPIRATION: _____

BID SCHEDULE

Springsteen Construction
P.O. Box 187, 16912 Cache Ln
Brownsville, CA 95919
(530) 216-7622
springsteenconstruction@gmail.com
www.springsteenconstruction.com

ESTIMATE

ADDRESS
City of Nevada City
317 Broad Street
City of Nevada City, CA
95959
Nevada County

ESTIMATE # 1030
DATE 03/04/2018

ACTIVITY	QTY	RATE	AMOUNT

ACTIVITY	QTY	RATE	AMOUNT
Bid This estimate is for the relocation of an existing fire hydrant and a historical non-functioning fire call box located at Nevada City Hall, 317 Broad Street. The fire box has no purpose other than aesthetic and will need to be saw cut and jackhammered for removal from the sidewalk. The fire box will be reinstalled at the historic firehouse location specified by the engineer. The fire hydrant will be relocated in accordance with current city standards and best practices and all parts required will be provided to Springsteen Construction prior to the commencement of the said work. Estimated time for project completion is three days. Cost breakdown is available upon request. Finally, the City of Nevada City is listed as additional insured for city projects not to exceed $40,000 at this time. Inclusions: 1. Existing fire hydrant will be removed and saved for city future use. Existing hydrant valve and tee will be removed and replaced with a new section of pipe. All concrete will be replaced to like standards. 2. Installation of new fire hydrant valve, tee, and thrust blocks including installation of all connection fittings at location specified by engineer. 3. All removed concrete will be replaced to like standards. Exclusions: 1. Any extra work requested or found necessary beyond the aforementioned will be on a time and materials basis agreed upon between the city and Springsteen Construction. Rock Clause: Costs within this proposal are firm unless there are unforeseen circumstances that result in obstacles or delays. For example, if the contractor begins excavating and finds large boulders, rebar, sewer drain, etc. In the event of such circumstances, the contractor will notify the client immediately with an evaluation and proposed change in price or work. If the obstacle prevents the completion of the job or if the client decides that the cost to proceed is too prohibitive, the client is responsible for labor and equipment costs incurred until that point and for any materials used that cannot be returned.	1	5,910.00	5,910.00

Looking forward to doing business with you! TOTAL **$5,910.00**

Accepted By

Accepted Date

FERGUSON® WATERWORKS

FERGUSON WW #919
DBA GROENIGER & CO
300 TAHOE AVENUE
ROSEVILLE, CA 95678-1741
Phone: 916-381-6100
Fax: 916-455-3402

Deliver To:
From: John Slaughter
Comments:

15:21:36 FEB 22 2018

FERGUSON ENTERPRISES INC 1423
Price Quotation
Phone: 916-381-6100
Fax: 916-455-3402

Bid No: B330352
Bid Date: 02/22/18
Quoted By: JPS

Cust Phone: 530-265-2496
Terms: NET 10TH PROX

Customer: CITY OF NEVADA CITY
317 BROAD STREET
NEVADA CITY, CA 95959-2405

Ship To: CITY OF NEVADA CITY
CITY OF NEVADA CITY
255 BOULDER STREET
NEVADA CITY, CA 95959

Cust PO#: CHRIS SCHACK

Job Name: N.C. HYD RELOCATION

Item	Description	Quantity	Net Price	UM	Total
DI350SJPX	8 CL350 DI SJ PIPE	18	18.500	FT	333.00
MJLSLAX	8X12 MJ C153 LONG SLV L/A	3	91.680	EA	275.04
MJFTLAXU	8X6 MJXFLG C153 TEE L/A	1	124.800	EA	124.80
MA236119UOL	6 DI MJ X FLG RW OL GATE VLV L/A	1	550.000	EA	550.00
MA423MJOLPNDHORED	5-1/4 A423 HYD 3' MJ OL PN DHO RED. REDDING HAS 3'RED/CUSTOMER TO PAINT	1	2250.000	EA	2250.00
IMJAPX	8 MJ C153 ACCY PK W/GLND	8	25.000	EA	200.00
SSLDEP6	6 DI MJ WDG REST GLND PK *ONELOK	2	41.000	EA	82.00
FNWNBSZ1U	6 ZN 150# FLG NUT/BLT SET	2	7.000	EA	14.00
U6FGFS	6 150# FF 1/8 FLG TYTE GSKT *Z	2	13.700	EA	27.40

Net Total:	$3856.24
Tax:	$337.45
Freight:	$0.00
Total:	$4193.69

Quoted prices are based upon receipt of the total quantity for immediate shipment (48 hours). SHIPMENTS BEYOND 48 HOURS SHALL BE AT THE PRICE IN EFFECT AT TIME OF SHIPMENT UNLESS NOTED OTHERWISE. QUOTES FOR PRODUCTS SHIPPED FOR RESALE ARE NOT FIRM UNLESS NOTED OTHERWISE.

CONTACT YOUR SALES REPRESENTATIVE IMMEDIATELY FOR ASSISTANCE WITH DBE/MBE/WBE/SMALL BUSINESS REQUIREMENTS.

Seller not responsible for delays, lack of product or increase of pricing due to causes beyond our control, and/or based upon Local, State and Federal laws governing type of products that can be sold or put into commerce. This Quote is offered contingent upon the Buyer's acceptance of Seller's terms and conditions, which are incorporated by reference and found either following this document, or on the web at http://wolseleyna.com/terms_conditionsSale.html.
Govt Buyers: All items are open market unless noted otherwise.

LEAD LAW WARNING: It is illegal to install products that are not "lead free" in accordance with US Federal or other applicable law in potable water systems anticipated for human consumption. Products with *NP in the description are NOT lead free and can only be installed in non-potable applications. Buyer is solely responsible for product selection.
WATER FLOW RATE NOTICE: Lavatory Faucets with flow rates over 0.5 GPM are not allowed for 'public use' in California.

City to purchase,

LIST OF SUBCONTRACTORS

NAME	PLACE OF BUSINESS	PORTION OF WORK
1.		
2.		
3.		
4.		
5.		
6.		
7.		
8.		
9.		
10.		

AGREEMENT

THIS AGREEMENT is made this _____ day of _____, between the CITY OF NEVADA CITY, a municipal corporation, hereinafter called "City," and _____, hereinafter called "Contractor."

WHEREAS, City solicited bids pertaining to the WATERLINE REPAIRS AT 317 BROAD STREET in said City: and

WHEREAS, after notice duly given, City has awarded the contract for such work to Contractor;

NOW, THEREFORE, IT IS AGREED by and between said parties as follows:

1. Scope of Work. The contractor agrees to furnish all labor, materials, tools and equipment, required to complete the improvements in Nevada City, California, in accordance with the plans, specifications and other contract representation made in mandatory meetings. All such work shall be performed in a good and workmanlike manner and to the satisfaction of the designer of said project.

2. Contract Price. As consideration for all such work, City agrees to pay to Contractor at rates as set forth on the attached bid schedule for an estimated total sum of _____ ($_____) Dollars, payable in the manner hereinafter set forth.

3. Contract Documents. The complete contract between the parties hereto consists of the Agreement, Estimate, Job Disclosure, Notice to Owner and Insurance Documentation. All of the foregoing documents are intended to cooperate, so that any work or requirement specified in any of them is to be carried out or observed the same as if mentioned in all.

4. Time for Performance. Within five (5) days after the execution of this Agreement, City shall give Contractor written Notice to Proceed, and thereafter Contractor shall commence the work and shall prosecute the same with due diligence until completion and acceptance by City; provided, however, that all such work shall be completed and ready for use within **twenty (20) working days** after Contractor receives said Notice to Proceed.

5. Extension of Time. If, because of adverse weather conditions, strikes, inability of the Contractor (through no fault on his/her part) to obtain necessary materials, or other cause beyond the reasonable control of Contractor, Contractor is unable to complete the required work within the allowed time, he shall be entitled to an extension or extensions of such time, commensurate with the unavoidable delay thus caused; provided, however that Contractor shall apply to City for approval of any such extension prior to the expiration of the time for performance as specified in the preceding paragraph.

6. Contractor's Failure to Complete Work. If Contractor fails to prosecute the work with such diligence as will insure its completion within the time hereinabove specified, or any extension thereof, or fails to complete such work within such time, or if Contractor shall otherwise violate this Agreement, City may give written notice to Contractor and his sureties of City's intention to terminate this Agreement unless, within five (5) days after services of such notice, satisfactory arrangements are made with the City for the completion of such work or the curing of such breach; and if such arrangements are not made within such time, City may, at its option, terminate this Agreement by giving written notice of such termination to Contractor and his sureties.

7. Payments to Contractor. On or before the tenth day of each month during the progress of the work, Contractor shall submit to the Designer an itemized statement of all labor and materials incorporated into the improvement during the preceding month and the portion of the contract price applicable thereto.

8. Indemnification. Contractor agrees to hold City, and its officers, agents, and employees harmless from any and all liability and claims for damages for death and personal injury, and for property damage, incident to or arising out of the operations of Contractor or any subcontractor under this Agreement, and Contractor further agrees to defend City, and its officers, agents, and employees in any and all lawsuits which may be brought for such damages caused, or alleged to have been caused, by such operations. In addition, Contractor agrees to furnish to the City evidences of insurance coverage. The approval of such insurance by City shall not constitute a waiver or limitation of any rights under this indemnity agreement, regardless of whether such insurance shall be held to be inapplicable to any such damage or claims therefore.

Executed in duplicate this _____ day of _____, _____.

ATTEST:

_____

CITY OF NEVADA CITY

By: _____
(Mayor)

By: _____
(Contractor)

By: _____
(Authorized Officer)

GENERAL CONDITIONS

1. Inspection of Construction

The Engineer shall have access to the work and the site of the work at all times and the Contractor shall afford such access to the Engineer and shall furnish all relevant information requested by him. At the request of the Engineer the Contractor shall open for inspection any part of the work which has been covered up, and if any part of the work has been covered up in contravention of the instructions of the Engineer, or if on being opened up, is found not to be in accordance with the terms of the contract, the expense of opening and recovering shall be charged to the Contractor. If the work has been covered up but not in contravention of such instructions and is found to be in accordance with the terms of the contract, the actual cost of opening and recovering shall be borne by the City, and in such case, if the work of opening and recovering is done by the Contractor, it shall be considered as extra work and paid for accordingly.

2. Change Orders

If for any reason it becomes necessary or desirable to change the alignment, dimensions, or design of the work, the City shall have the right to issue written change orders therefore. If the Contractor considers that any such change involves extra work, he shall immediately so notify the Engineer in writing, and shall make claim for compensation for such work not later than the first day of the month following the month in which the work was performed. If, in the opinion of the Engineer, any change order results in a change in the amount of work performed, the contract price shall be adjusted for extra work or omitted work, as the case may be.

3. Contractor's Employees and Subcontractors

The Contractor shall at all times be responsible for the adequacy and efficiency of his employees and any subcontractor and the latter's employees. All workers shall have adequate skill and experience to perform properly the work assigned to them.

4. Errors and Omissions

If the Contractor in the course of the work becomes aware of any error or omission in the contract documents, or of any discrepancy between such documents and the physical conditions of the work site, he shall immediately inform the Engineer, who shall take such action as he may deem necessary in order to rectify the matter. Any work done after such discovery and without the authorization of the Engineer will be at the Contractor's risk.

5. Guaranty of Work

For a period of one (1) year after final acceptance of the work by the City, the Contractor shall make all repairs and replacements arising out of any defective workmanship or materials. If the Contractor fails to make such repairs or replacements within ten (10) days after receiving written notice to do so, or within such further time as may be allowed by the City, the City may undertake such repairs or replacements, in which case the Contractor shall be liable to the City for the cost thereof.

6. Contractor's Responsibility for Work

The Contractor shall be responsible for the proper care and protection of the work, and of all materials delivered to the work site, until completion of the work and its final acceptance by the City.

7. Performance Bond

No Performance bond shall be required for this project.

8. Payment Bond

A payment (labor and materials) bond is required for public works contracts involving an expenditure in excess of twenty-five thousand dollars ($25,000). If the contract is in excess of this amount the contractor shall provide a payment bond to the City of Nevada City before commencement of work. Cost for the bond shall be included in the contractor bid proposal and no additional compensation will be provided.

A payment bond shall be in an amount not less than 100 percent of the total amount payable pursuant to the contract. The bond shall be in the form of a bond and not a deposit in lieu of a bond. The bond shall be executed by an admitted surety insurer.

9. Workmen's Compensation Insurance

The Contractor shall carry workmen's compensation insurance for all employees working on or about the site of the work, and if any work is subcontracted, the Contractor shall require each subcontractor to carry such insurance for all of the latter's employees, unless they are covered by the Contractor's insurance.

10. Insurance Requirements

CONTRACTOR shall purchase and maintain insurance in amounts of coverage not less than the following amounts:

General Liability: (Including operations, products and completed operations)	$1,000,000 per occurrence for bodily injury, personal injury and property damage. If Commercial General Liability Insurance or other form with a general aggregate limit is used either the general aggregate limit shall apply separately to this project/location or the general aggregate limit shall be twice the required occurrence limit.
Automobile Liability:	$1,000,000 per accident for bodily injury and property damage.

The Contractor shall deliver to the City, concurrently with the execution of the contract, certificates evidencing all insurance required by the contract, and each such certificate shall include a provision to the effect that the policy or policies cannot be canceled or materially modified unless the insurer gives the City at least fifteen (15) days written notice thereof prior to such cancellation or modification.

11. Prevailing Wages

Contractor shall pay each laborer, workman or mechanic in accordance with State and Federal Prevailing Wage Rates and the California Labor Code. These wage rates are hereby made a part of this contract:

State General Prevailing Wage Determinations in effect on date advertised
General prevailing wage determination
Journeyman and Apprentice Prevailing Wage Rates can be accessed at the following websites:
http://www.dir.ca.gov/OPRL/2017-2/PWD/index.htm and
http://www.dir.ca.gov/das/publicworks.html

Reference: Labor Code http://www.labor.ca.gov/laborlawreg.htm

Federal Prevailing Wage Determinations in effect on bid date
General Decision # CA170009 CA9
http://www.wdol.gov/wdol/scafiles/davisbacon/ca.html

Electronic Certified Payroll Records

- All contractors must furnish electronic certified payroll records to the Labor Commissioner using the online eCPR data system
- No contractor or subcontractor may be listed on a bid proposal for a public works project unless registered with the Department of Industrial Relations pursuant to Labor Code section 1725.5 [with limited exceptions from this requirement for bid purposes only under Labor Code section 1771.1(a)].
- No contractor or subcontractor may be awarded a contract for public work on a public works project unless registered with the Department of Industrial Relations pursuant to Labor Code section 1725.5.
- This project is subject to compliance monitoring and enforcement by the Department of Industrial Relations.
- The contractor shall post job site notices prescribed by regulation. (See 8 Calif. Code Reg. §16451(d)

PROJECT SPECIFICATIONS

PROJECT LIMITS

As shown on the attached site plan.

PROJECT DESCRIPTION

The project consists of waterline repairs, as further shown and described on the attached exhibits:

1. Remove existing fire hydrant and historic fire call box
2. Reinstall fire call box at new location
3. Install Fire Hydrant Assembly at new location
4. Replace any removed concrete or asphalt

Contractor shall be responsible for removal and disposal of debris, traffic control, testing, flushing and coordination of tie-in pipe connections.

Bids for moving fire hydrant
in front of City Hall

26 March 2018

Bid opening 9:00 AM - 26 March 2018

Attending

1) [illegible]

2) [illegible]

3). [illegible]

Bids

C&D = 18,536

CME = 17,044

Springsteen = Labor 5,910.00 + Materials 4194.00 = $10,104.00

RESOLUTION NO. 2018-XX

A RESOLUTION OF THE CITY COUNCIL OF THE CITY OF NEVADA CITY TO AWARD A CONTRACT TO SPRINGSTEEN CONSTRUCTION FOR WATER REPAIRS AT 317 BROAD STREET IN NEVADA CITY AND AUTHORIZE MAYOR TO SIGN

WHEREAS, The City of Nevada City provides water service to residents and customers within City limits and adjacent properties not within NID's District boundary; and

WHEREAS, The City of Nevada City provides maintenance of the water distribution system which includes replacement and repair of aging infrastructure; and

WHEREAS, consist with Municipal Code requirements, City staff advertised and received bids for Water Repairs at 317 Broad Street in Nevada City.

NOW, THEREFORE, BE IT RESOLVED by the City Council of the City of Nevada City to award the contract to Springsteen Construction in the amount of $10,104.00 plus $2,000.00 contingencies for Water Repairs at 317 Broad Street in Nevada City and authorize the Mayor to sign.

PASSED AND ADOPTED at the regular meeting of the City Council of the City of Nevada City on the 11th day of April, 2018, by the following vote:

AYES:

NOES:

ABSENT:

ABSTAIN:

_____

Duane Strawser, Mayor

ATTEST:

_____

Niel Locke, City Clerk

REPORT TO CITY COUNCIL

City of Nevada City
317 Broad Street
Nevada City CA 95959
www.nevadacityca.gov

APRIL 11, 2018

TITLE: Award Of Contract Change Order For Professional Environmental Consulting Services For Nevada Street Bridge Over Deer Creek In Nevada City

RECOMMENDATION: Pass Resolution 2018-XX awarding a contract change order to LSA Associates, Inc. in the amount of $9,000 for Professional Environmental Consulting Services for Nevada Street Bridge in Nevada City and authorize the Mayor to sign.

CONTACT: Bryan K. McAlister, City Engineer

BACKGROUND/DISCUSSION: The City is in the process of replacing the 1938 bridge over Deer Creek on Nevada Street in Nevada City. The Contract for Professional Environmental Consulting Services for Nevada Street Bridge was awarded by the City Council on May 25, 2016. Environmental Consulting Services are substantially complete and consist of required studies and documents for National Environmental Policy Act (NEPA) and the California Environmental Quality Act (CEQA) environmental review. Subsequent to approval of the Natural Environment Study (NES) for the Nevada Street over Deer Creek Bridge Replacement Project (Project), the foothill yellow-legged frog (FYLF) was designated as a State Candidate species. CA Dept. of Fish and Game requested further analysis to determine the presence of Foothill Yellow-legged Frog (fylf) and a plan for what we will do if they are found during construction. In order to minimize the potential for significant delays during construction, we decided that it would be best to prepare an Incidental Take Permit for fylf so that this can be permitted by Fish and Game prior to construction.

LSA Associates Inc. provided a proposal for the additional environmental services necessary to prepare the ITP for CA Department of Fish and Game review and approval. This additional work is necessary to support permitting for the bridge reconstruction project. The change order amount was reviewed by City staff and determined to be a fair and reasonable price for additional services using personnel familiar with the permits required.

FISCAL CONSIDERATIONS: The project will be funded by Federal Highway Bridge funds with an 11.4% matching from Measure S funds.

ATTACHMENT:

- ✓ Contract Change Order for Professional Environmental Consulting Services for Nevada Street Bridge
- ✓ Resolution 2018-XX

BERKELEY
CARLSBAD
FRESNO
IRVINE
LOS ANGELES
PALM SPRINGS
POINT RICHMOND
RIVERSIDE
ROSEVILLE
SAN LUIS OBISPO

February 8, 2018

Bryan McAlister
City Engineer
City of Nevada City, Engineering Department
Nevada City, California 95959

Subject: Proposal for Preparation of a Section 2081 Incidental Take Permit Application for Foothill Yellow-Legged Frog for the Nevada Street over Deer Creek Bridge Replacement Project

Dear Mr. McAlister:

Subsequent to approval of the Natural Environment Study (NES) for the Nevada Street over Deer Creek Bridge Replacement Project (Project), the foothill yellow-legged frog (FYLF) was designated as a State Candidate species. Due to the change in listing status for this species and the determination in the NES that the project may result in "take" of FYLF, the City will need to obtain a Section 2081 Incidental Take Permit (ITP) pursuant to the California Endangered Species Act from the California Department of Fish and Wildlife (CDFW) to authorize impacts to FYLF.

SCOPE OF WORK

Our budget for this task is based on the compensation strategy consisting of purchasing mitigation credits at an approved bank or an in-lieu fee option.

LSA will prepare an application to obtain a 2081 ITP from CDFW in accordance with Title 14, Section 783.2 – Incidental Take Permit Applications, of the California Code of Regulations to authorize "take" of FYLF during project construction. The application will include applicant information, a description of the project and how it could impact FYLF, and proposed measures to fully mitigate project impacts to FYLF. The mitigation proposal is a key component of the take permit as the applicant must demonstrate that impacts to FYLF are "fully mitigated." LSA will coordinate with the City during development of the compensation approach. We will also recommend coordination with CDFW during this effort.

Once the ITP application is completed and has undergone internal review, LSA will submit the ITP application to CDFW on behalf of the City and follow up with CDFW throughout the review process.

This task also includes 12 hours for LSA to respond to CDFW comments on the 2081 ITP application and a field visit with CDFW.

201 Creekside Ridge Court, Suite 250, Roseville, California 95678 916.772.7450 www.lsa.net

BUDGET AND SCHEDULE

We propose to perform this work on an hourly basis in accordance with our current contract with the City. We estimate that a budget of $8,960.52 will be adequate to complete this work; this includes all expenses and indirect charges. The budget will not be exceeded without your approval.

Thank you for requesting this proposal from LSA for Incidental Take Permit Acquisition associated with the Nevada Street over Deer Creek Bridge Replacement Project. If you have any questions, please contact me at edward.heming@lsa.net or 916-772-7450.

Sincerely,

LSA Associates, Inc.

Edward Heming
Associate Planner

CNV1601

City of Nevada City

Nevada St. Bridge over Deer Creek Replacement Project

LSA

2/8/2018

		LSA							
		Principal	Project Manager	Senior Environmental Planner/Technical Specialist	Environmental Planner/Technical Staff	GIS	DM/Production	Total LSA Hours	Total LSA Fees
	Employee Name	Jeff Bray	Edward Heming	Mike Trueblood	Dan Williams	Anna Van Zuuk	Stephanie Powers		
	Hourly Rate ($/ hour)	$58.88	$44.50	$36.59	$32.19	$25.75	$27.49		
	Fringe	0.00%							
	Overhead	176.88%							
	Profit	10.00%							
	Multiplier	3.0457							
% in Year	Escalation	5%							
20%	Year 1	$179.33	$135.53	$111.44	$98.04	$78.43	$83.73		
80%	Year 2	$188.30	$142.31	$117.01	$102.94	$82.35	$87.91		
0%	Year 3								
0%	Year 4								
0%	Year 5								
100%	Weighted Average	$186.50	$140.95	$115.90	$101.96	$81.56	$87.07		
Phase 01	**2081 Incidental Take Permit**								
1.1	2081 ITP	2.00		8.00	40.00	8.00	3.00	61.00	$6,292.41
1.2	RTC	2.00		2.00	8.00			12.00	$1,420.50
1.3	Field Visit				8.00			8.00	$815.70
1.4	PM		2.00					2.00	$281.91
1.5								0.00	$0.00
1.6								0.00	$0.00
	Phase 012081 Incidental Take PermitSubtotal	**4.00**	**2.00**	**10.00**	**56.00**	**8.00**	**3.00**	**83.00**	**$8,810.52**

CNV1601

City of Nevada City

Nevada St. Bridge over Deer Creek Replacement Project

LSA

2/8/2018	LSA						Total LSA Hours	Total LSA Fees
	Principal	Project Manager	Senior Environmental Planner/Technical Specialist	Environmental Planner/Technical Staff	GIS	DM/Production		
Employee Name	Jeff Bray	Edward Heming	Mike Trueblood	Dan Williams	Anna Van Zuuk	Stephanie Powers		
Reimbursable Expenses								
Travel/GPS								$100.00
Copy/Reproduction								$50.00
								$0.00
								$0.00
								$0.00
								$0.00
								$0.00
Subtotal Reimbursable Expenses								**$150.00**
							Total	**$8,960.52**

EXHIBIT 10-H COST PROPOSAL (EXAMPLE #1) PAGE 1 OF 2

ACTUAL COST-PLUS-FIXED FEE OR LUMP SUM (FIRM FIXED PRICE) CONTRACTS

(DESIGN, ENGINEERING AND ENVIRONMENTAL STUDIES)

Note: Mark-ups are Not Allowed

Consultant LSA Contract No. CNV1601 Date 2/8/2018

DIRECT LABOR

Classification/Title	Name	hours	Actual Hourly Rate	Total
(Project Manager)	Edward Heming	2	$44.50	$89.00
(Principal)	Jeff Bray	4	$58.88	$235.52
(Senior Biologist)	Mike Trueblood	10	$36.59	$365.90
(Wildlife Biologist)	Dan Williams	56	$32.19	$1,802.64
(GIS)	Anna Van Zuuk	8	$25.75	$206.00
(Document Management)	Stephanie Powers	3	$27.49	$82.47

LABOR COSTS

a) Subtotal Direct Labor Costs $2,781.53

b) Anticipated Salary Increases (see page 2 for sample) $111.26

c) TOTAL DIRECT LABOR COSTS [(a) + (b)] $2,892.79

FRINGE BENEFITS

d) Fringe Benefits (Rate 84.93%) **e) Total Fringe Benefits** [(c) x (d)] $2,456.85

INDIRECT COSTS

f) Overhead (Rate: 91.95% g) Overhead [(c) x (f)] $2,659.92

h) General and Administrative (Rate: 0.00% i) Gen & Admin [(c) x (h)] $0.00

j) **Total Indirect Costs** [(e) + (g) + (i)] $5,116.77

FEE (Profit)

q) (Rate: 10.00%) k) **TOTAL FIXED PROFIT** [(c) + (j)] x (q)] $800.96

OTHER DIRECT COSTS (ODC)

	Description	Unit(s)	Unit Cost	Total
l)	Travel/Mileage Costs (supported by consultant actual costs)	1	$150.00	$150.00
m)	Equipment Rental and Supplies (itemize)	0	$3.00	$0.00
n)	Permit Fees (itemize), Plan sheets (each), Test Holes (each), etc.	0	$5.00	$0.00
o)	Subconsultant Costs (attach detailed cost proposal in same format as prime consultant estimate for each subconsultant)	0	$6.00	$0.00

p) **Total Other Direct Costs** [(l) + (m) + (n) + (o)] $150.00

TOTAL COST [(c) + (j) + (k) + (p)] $8,960.52

NOTES:

- Employees subject to prevailing wage requirements to be marked with an *.
- ODC items should be based on actual costs and supported by historical data and other documentation.
- ODC items that would be considered “tools of the trade” are not reimbursable.
- ODC items should be consistently billed directly to all clients, not just when client will pay for them as a direct cost.
- ODC items when incurred for the same purpose, in like circumstances, should not be included in any indirect cost pool or in overhead rate.

RESOLUTION NO. 2018-XX

A RESOLUTION OF THE CITY OF NEVADA CITY TO AWARD A CONTRACT CHANGE ORDER TO TO LSA ASSOCIATES, INC., FOR PROFESSIONAL ENVIRONMENTAL CONSULTING SERVICES FOR NEVADA STREET BRIDGE OVER DEER CREEK IN NEVADA CITY AND AUTHORIZE MAYOR TO SIGN

WHEREAS, The City is in the process of completing environmental review, permitting and design for replacement of the 1938 bridge over Deer Creek on Nevada Street in Nevada City; and

WHEREAS, Subsequent to approval of the Natural Environment Study (NES) for the Nevada Street over Deer Creek Bridge Replacement Project (Project), the foothill yellow-legged frog (FYLF) was designated as a State Candidate species; and

WHEREAS, Due to the change in listing status for this species and the determination in the NES that the project may result in “take” of FYLF, the City will need to obtain a Section 2081 Incidental Take Permit (ITP) pursuant to the California Endangered Species Act from the California Department of Fish and Wildlife (CDFW) to authorize impacts to FYLF; and

WHEREAS, LSA Associates Inc. provided a proposal for the additional environmental services necessary to prepare the ITP for CA Department of Fish and Game review and approval.

BE IT RESOLVED, the City Council of the City of Nevada City to award the Contract change order to LSA Associates, Inc. in the amount of $9,000 for Professional Environmental Consulting Services for Nevada Street Bridge in Nevada City and authorize the Mayor to sign.

PASSED AND ADOPTED at the regular scheduled meeting of the City Council held on the 11th day of April 2018 by the following vote:

AYES:

NOES:

ABSENT:

ABSTAIN:

_____

Duane Strawser, Mayor

ATTEST:

_____

Niel Locke, City Clerk

CITY OF NEVADA CITY
ACTION MINUTES
REGULAR CITY COUNCIL MEETING OF MARCH 28, 2018

NOTE: This meeting is available to view on the City's website www.nevadacityca.gov – Go to *Quick Links* and Click on *Agendas & Minutes* and find the Archived Videos in the middle of the screen. Select the meeting date and Click on *Video* to watch the meeting. For website assistance, please contact Loree' McCay, Deputy City Clerk at (530) 265-2496, ext 133.

- City Council Meetings are available on DVD. To order, contact City Hall - cost is $15.00 per DVD.
- Closed Session Meetings are not recorded.

CLOSED SESSION – 6:15 PM

1. Pursuant to Government Code Section 54956.9 the City Manager, Catrina Olson is requesting a closed session conference to discuss and confer on a Settlement Authority Request regarding the pending Worker's Compensation claim of Timothy Ewing against the City, Claim No. NCWA-556911.

REGULAR MEETING – 6:30 PM - Call to Order

Roll Call: Present: Moberg, Phelps, Senum, Vice Mayor Parker, & Mayor Strawser

PLEDGE OF ALLEGIANCE

Consulting City Attorney, Hal DeGraw reported out of Closed Session:
1. Staff to proceed as directed.

PROCLAMATIONS: "Telestream Day" – March 28th, 2018

PRESENTATIONS: None

BUSINESS FROM THE FLOOR

1. PUBLIC COMMENT (Per Government Code Section 54954.3)
Please refer to the meeting video on the City's website at www.nevadacityca.gov.

2. COUNCIL MEMBERS REQUESTED ITEMS AND COMMITTEE REPORTS:

3. CONSENT ITEMS:

A. Subject: A Resolution Of The City Of Nevada City Council To Award A Quote In The Amount Of $11,236.04 To Global Sweeping Solutions For Repair Of The Street Sweeper For The City Of Nevada City

Recommendation: Pass Resolution 2018-13 awarding a bid in the amount of $11,236.04 to Global Sweeping Solutions for repair of the street sweeper for the City of Nevada City.

Action: Motion by Parker, seconded by Moberg to approve Consent Item 3A as presented.
(Approved 5 – 0)

4. APPROVAL OF ACTION MINUTES:

A. City Council Meeting – March 14th, 2018
Action: Motion by Phelps, seconded by Parker to approve March 14th, 2018 Minutes as presented.
(Approved 4 – 0: 1 Abstention - Senum)

5. DEPARTMENT REQUESTED ACTION ITEMS AND UPDATE REPORTS:

A. Subject: A Resolution Of The City Of Nevada City Council To Authorize The Procurement From Hill Brothers Chemical Co. For A Total Amount Not To Exceed $15,500 For A Magnesium Hydroxide Tank And Mixer For The City Of Nevada City
Recommendation: Pass Resolution 2018-14 authorizing the awarding of a bid in the amount of $15,500, with shipping, tax and contingencies as quoted, to Hill Brothers Chemical Co. for a Magnesium Hydroxide Tank and Mixer for the City of Nevada City.
Action: Motion by Moberg, seconded by Senum to approve as presented.
(Approved 5 – 0)

B. Subject: 2nd Quarter Financial Update, Fiscal Year (FY) 17/18
Recommendation: Receive and file.
Action: Receive and file.

6. PUBLIC HEARINGS:

7. OLD BUSINESS:

A. Subject: An Ordinance Of The City Of Nevada City Amending Section 9.22.110 Of Chapter 9.22 Of The Nevada City Municipal Code Relating To Additional Requirements For Cultivation Facilities To Add Subsection H Limiting Size
Recommendation: Waive reading of Ordinance, read title only and introduce for first reading.
Action: None. Direct staff to amend language banning cultivation and align with the definition of state permit types 1, 2, and 3.

8. NEW BUSINESS:

A. Subject: Resolution Amending Appointed Board Director And Alternate Board Director To The Public Agency Risk Sharing Authority Of California And Northern California Cities Self Insurance Fund
Recommendation: Pass Resolution 2018-15 amending Resolution 2013-47 appointing a Board Director and Alternate Board Director for the Public Agency Risk Sharing Authority of California (PARSAC) and the Northern California Cities Self Insurance Fund (NCCSIF).

Action: Motion by Senum, seconded by Phelps to approve as presented.
(Approved 5 – 0)

B. Subject: Medical Cannabis Business Permit Format And Indemnification Agreement

a) **Recommendation:** Review the draft Indemnification Agreement prepared by the City Attorney and provide direction.
b) Make a motion to pass Resolution 2018-XX, authorizing a permit format to be used for permitting any qualifying medical cannabis business.
c) Provide direction to staff to move forward in creating a permit fee/deposit.

Action: None. Direct staff to make amendments and bring forward a deposit fee for permitting.

9. CORRESPONDENCE:

10. ANNOUNCEMENTS:

Please refer to the meeting video on the City's website at www.nevadacityca.gov.

11. CITY MANAGER'S REPORT:

12. ADJOURNMENT – 8:02 pm

_____
Duane Strawser, Mayor

ATTEST:

_____
Niel Locke, City Clerk

REPORT TO CITY COUNCIL

City of Nevada City
317 Broad Street
Nevada City CA 95959
www.nevadacityca.gov

APRIL 11, 2018

TITLE: Monthly Update On City Council Six-Month Strategic Objectives

RECOMMENDATION: Receive and file.

CONTACT: Catrina Olson, City Manager

BACKGROUND/DISCUSSION: On February 7, 2018, the City Council, Planning Commission and executive staff held a planning retreat to discuss three-year goals and to update six-month strategic objectives to guide the organization.

Consistent with the City Council's direction, a monthly status report has been prepared to provide an update on attainment of the Council's six-month objectives. The attached grid outlines the status of each objective and, where appropriate, includes comments to provide additional information about select objectives.

ENVIRONMENTAL CONSIDERATIONS: None.

FINANCIAL CONSIDERATIONS: None.

ATTACHMENT:

- ✓ 6-Month Strategic Objectives Grid

NEVADA CITY

SIX-MONTH STRATEGIC OBJECTIVES

February 7, 2018 – August 1, 2018

THREE-YEAR GOAL: *Enhance and maintain the infrastructure and facilities*

WHEN	WHO	WHAT	STATUS			COMMENTS
			DONE	ON TARGET	REVISED	
1. By May 1, 2018	City Engineer and Councilmember Reinette Senum	Identify and present to the City Council for direction and to the public for input, options for one-way or closed streets for downtown.		X		
2. By June 1, 2018	City Engineer (lead), Public Works Superintendent and City Manager	Provide to the City Council for consideration recommendations for funding, including a possible Measure S amendment, to include water/sewer collection/distribution improvements.		X		
3. By June 1, 2018	City Engineer and Mayor Duane Strawser	Develop and present to the City Council for consideration schematic plans for Spring Street/National Alley parking, with pedestrian connections and right-of-ways.		X		
4. By August 1, 2018	City Engineer, working with Water Treatment staff	Present a procurement proposal to BLM for their property for the Water Plant and surrounding property.		X		
5. By August 1, 2018	Mayor and City Engineer, working with CalTrans	Present to the City Council for action a plan to change the existing aluminum rails on Nevada City bridges to a more compatible historic theme.		X		

THREE-YEAR GOAL: *Improve and manage fiscal stability and sustainability*						
WHEN	**WHO**	**WHAT**	**STATUS**			**COMMENTS**
			DONE	ON TARGET	REVISED	
1. By March 15, 2018	City Attorney (lead), City Manager and City Planner	Present a proposal to the City Council for consideration for refinement/slowing down the cannabis business application process to be more efficient and for better utilization of staff and funding resources.		X		
2. By April 15, 2018	City Manager (lead), Admin Services Manager, Accountant, Customer Service Rep, working with staff and MGT consultant	Update the City's A87 Cost Allocation Plan (direct and indirect City costs) and present to the City Council during the budget process.			X	June 30, 2018
3. By May 15, 2018	City Manager and Admin Services Manager	Complete a Wastewater Rate Study and bring to City Council for consideration an updated 5-Year Rate Schedule.		X		
4. By June 1, 2018	Admin Services Manager (lead), City Manager and City Engineer	Complete a RFP and bring a contract to the City Council for a consultant to complete the AB1600 Study regarding impact fees.		X		
5. By June 15, 2018	City Manager (lead), Admin Services Manager and Councilmember Valerie Moberg	Identify non-compliant AIrBnBs and identify methods of better TOT collection.		X		
6. By June 15, 2018	City Planner (lead), City Manager and Admin Services Manager	Assess cannabis business costs and permitting processes to determine appropriate fees and the permit renewal process.		X		

THREE-YEAR GOAL: *Reduce homelessness and transient population*						
WHEN	**WHO**	**WHAT**	**STATUS**			**COMMENTS**
			DONE	ON TARGET	REVISED	
1. By April 1, 2018	Mayor Duane Strawser, Police Chief and City Manager, working with Brendan Phillips of County Social Services, the County Court System, Local Police Agencies and the DA's Office	Develop collaborative strategies to reduce homelessness.		X		
2. At the May 23, 2018 Council meeting	Police Chief (lead), Mayor Duane Strawser and City Attorney	Prepare ordinance amendments to elevate the penalties regarding quality of life violations to misdemeanors and present to the City Council for consideration.		X		
3. At the July 25, 2018 Council meeting	City Planner (lead), City Attorney and Planning Commissioner Jason Rainey, with input from the Planning Commission	Draft an ordinance that addresses incentives for developers and residents for affordable housing and present to the City Council for consideration.		X		

THREE-YEAR GOAL: *Increase community communication, awareness and involvement*						
WHEN	**WHO**	**WHAT**	**STATUS**			**COMMENTS**
			DONE	ON TARGET	REVISED	
1. Bimonthly (by the 15th of the month prior to utility billings)	Mayor and the Department Heads	Provide written information about current/upcoming projects for inclusion in the Nevada City Newsletter.	X			Completed - ongoing
2. By March 1, 2018	Parks and Recreation Supervisor	Distribute the Volunteer Coordinator job description to community groups (e.g., Chamber of Commerce, Service Clubs) to assist in recruiting.	X			Completed
3. At the May 9, 2018 Council meeting	City Manager and Parks and Recreation Supervisor	Report to the City Council the guidelines for use of the City social media accounts by staff.			X	June 20, 2018 City Council Meeting
4. By July 1, 2018	City Manager (lead), Admin Services Manager, Parks and Recreation Supervisor and consultant Jesse Lockes	Create City social media accounts.			X	July 31, 2018

REPORT TO CITY COUNCIL

City of Nevada City
317 Broad Street
Nevada City CA 95959
www.nevadacityca.gov

APRIL 11, 2018

TITLE: Progress Report For Design Of Nevada Street Bridge Replacement Project In Nevada City

RECOMMENDATION: (No action requested)

CONTACT: Bryan K. McAlister, City Engineer

BACKGROUND/DISCUSSION: The City is in the process of replacing the 1938 bridge over Deer Creek on Nevada Street in Nevada City. The bridge was programmed for replacement as a result of routine bridge inspections conducted by Caltrans which identified numerous deficiencies. Bridge replacement is being completed as part of the Federal Highway Association (FHWA) Highway Bridge Program. Environmental review is substantially complete and design is in progress. The contract for Professional Engineering Consulting Services for Nevada Street Bridge was awarded by the City Council on September 28th, 2016. A public workshop regarding bridge type was conducted on November 16, 2016.

Representatives from the design team will provide a progress report to City Council on April 11, 2018. The following is an outline of the progress report being presented. Attached are exhibits for bridge plan and profile.

1) Welcome and Introduction
2) Purpose of Tonight's Presentation
3) Accomplishments since Nov 16, 2016 Meeting (Environmental, Preliminary Design, Some Caltrans Approvals, Geotech, Utility coordination)
4) What is Happening Now (Design, Permitting, Utilities, Bridge Approval, ROW agreements)
5) Proposed Bridge (Features, Status of Caltrans Approval, Feedback from 2016)
6) Proposed Roadway Improvements
7) Construction Timing

FISCAL CONSIDERATIONS: The project will be funded by Federal Highway Bridge funds with an 11.4% matching from Measure S funds.

ATTACHMENT:

- ✓ Exhibits for Design of Nevada Street Bridge

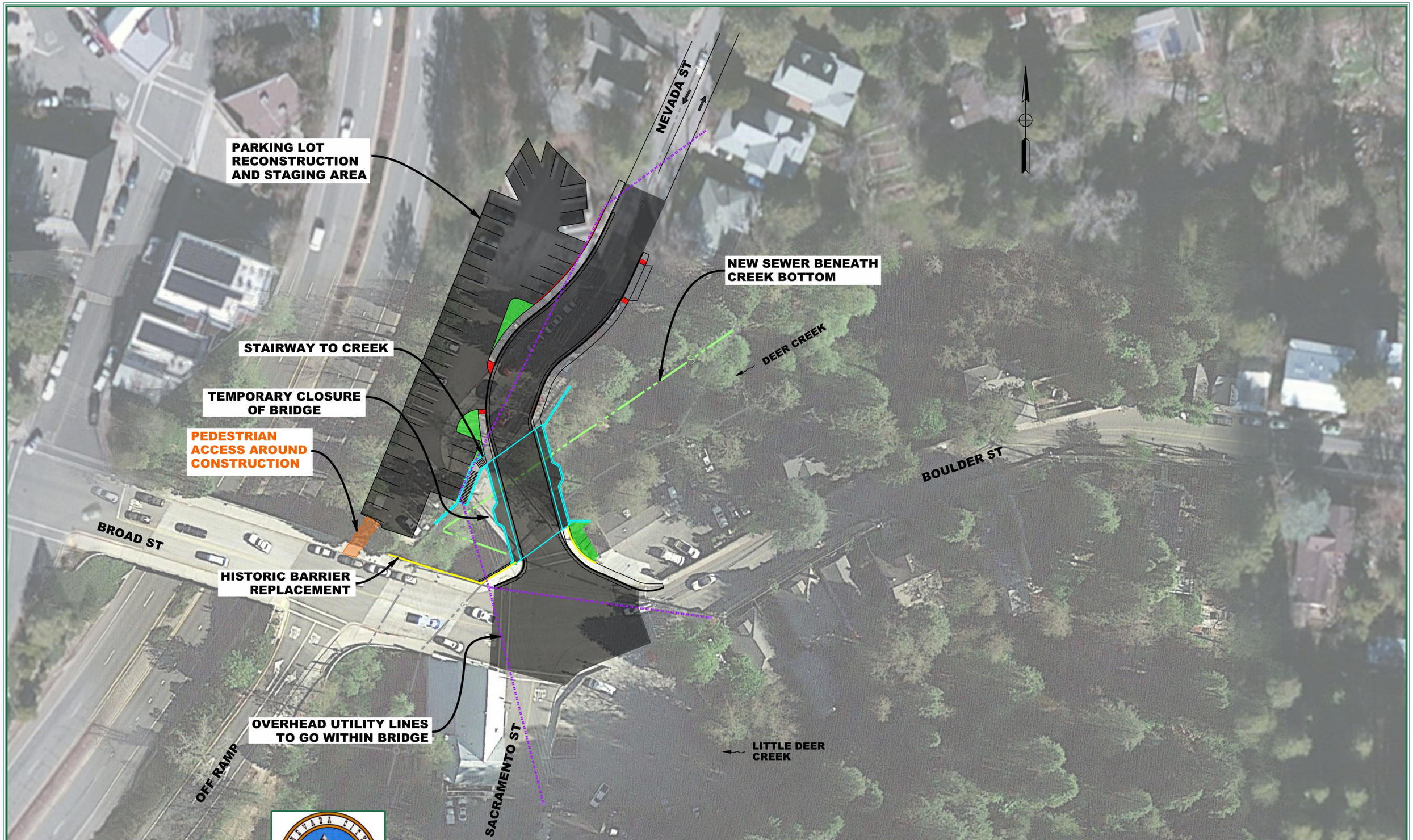

PREPARED BY:

DOKKEN ENGINEERING
110 Blue Ravine Road, Suite 200
Folsom, CA. 95630
(916)858-0642

NEVADA CITY CALIFORNIA

Workshop Exhibit - Layout

APRIL 2018

...\2244_Workshop 2 Exhibit.dgn

Attachment D – Rendering of Selected Aesthetic Concept for Proposed Nevada Street Bridge Over Deer Creek

BROAD STREET

RETAINING WALL

PLANTER

PLANTER

REPLACE RAILING

"N" 11+43.60 BC

15 MPH
DESIGN SPEED

15'

19.4'

15'

15'

12

1

11

"N" 10+62.68 BB

"N" 11+35.37 EB

"N" 12+21.93 PRC

5' SIDEWALK

"N" LINE

FOR NEVADA STREET BRIDGE
No. 17C0002, SEE STRUCTURE PLANS

INTERSECTION WITH
BROAD STREET AT
"N" 10+00.00

5' SIDEWALK

DEER CREEK

2

"N" 13+26.17 EC

13

18'

5' SIDEWALK

REGRADE AND REPLACE
LANDSCAPE AND SIDEWALK

NEVADA STREET

12.8'

CENTURY 21

DRIVEWAY CONFORM

BOULDER STREET

DEER CREEK INN

"N" 13+44.85
CONFORM

HORIZONTAL CURVE DATA TABLE				
#	RADIUS	DELTA	TANGENT	LENGTH
1	65.00'	69° 2' 45"	44.71'	78.33'
2	200.00'	29° 51' 50"	53.34'	104.24'

REVISIONS			
NO.	DESCRIPTION	DATE	BY

BENCH MARK ELEV. –
DESCRIPTION
–
–
–
–

FIELD BOOK

PLAN SCALE
HORIZ. 1"=10'
VERT. N/A

DRAWN BY: R. SANDERS
DATE: 4/21/2017

DESIGN BY: A. LEE
R.C.E. 84180 DATE: 9/30/17

CHECKED BY:
R.C.E. DATE:

REGISTERED PROFESSIONAL ENGINEER
AMANDA J. LEE
No. 84180
Exp. 9-30-17
STATE OF CALIFORNIA

NEVADA STREET BRIDGE PROJECT

LAYOUT PLAN

PN: 2244

SHEET NO.
OF
X

CAD FILE: ...\511\2244eo01.dgn

4/21/2017

REPORT TO CITY COUNCIL

City of Nevada City
317 Broad Street
Nevada City CA 95959
www.nevadacityca.gov

APRIL 11, 2018

TITLE: Final Map Check for Recordation of the Tentatively Approved Nevada City Tech Center Phase 3 Final Map for Subdivision Into Three (3) Commercial Lots

RECOMMENDATION:

After reviewing and considering the approved Mitigation Measures and Conditions of Approval, adopt Resolution 2018-XX to approve for filing the Final Map for Nevada City Tech. Center LLC – Phase 3 and authorize the Mayor to sign the map.

CONTACT: Amy Wolfson, City Planner; Bryan McAlister, City Engineer

BACKGROUND:

City Council approved the applicant's Tentative Map on Feb 14, 2006. A Development Agreement was subsequently recorded as approved by City Council to set forth the provisions, timing and requirements for development. The Development Agreement has been amended several times with revisions that include zoning changes and time extensions. The current version of the Development Agreement was approved by the City Council in August 2015. The Phase 3 Final Map consists of three lots for commercial development in conformance with the Development Agreement and approved Tentative Map.

The owners desire to continue development of a business park project, consisting of two properties of approximately 400,000 square feet of light industrial space, and 20,000 square feet of related facilities; each of these two parcel are entitled to 200,000 square feet of building space and 10,000 square feet of related ancillary facility space. The project will continue to generate jobs and revenue which, as previously found in entering into the Development Agreement and extending it, will benefit the City and its residents.

MAP CHECK:

The applicant submitted a Final Map for Checking and Recording to City staff in December 2018. Staff has reviewed all applicable Mitigation Measures and Conditions of Approval, attached, and has determined that the applicant has fulfilled all obligations necessary to record with the Office of the County Recorder. All roads, sewer & water utilities have been completed, inspected, and approved. There are several applicable conditions that will need to be satisfied prior to issuance of building permits associated with the development of individual lots.

PROJECT REGULATORY CONSIDERATIONS

Subdivision Ordinance: Pursuant to Section 16.04.450 of the City Municipal Code, within ten days after the filing of the final map with the city clerk, or at the next regular meeting of the city council after the meeting at which it receives the map, whichever is later, the council shall approve the map if it conforms with all of the requirements of the Subdivision Map Act, this chapter and any rulings made thereunder, and if not, the council shall disapprove the map. If the council does not approve or disapprove the map within the prescribed time, or any authorized extension thereof, and the map conforms with all said requirements, it shall be deemed approved, and the city clerk shall certify such approval thereon. At the same time the council approves the final map, it shall also accept, accept subject to improvement, or reject any offer of dedication, and the city clerk shall certify such action on the map. If, at the time of approval of the final map by the council, any public improvements required by the Subdivision Map Act and this chapter have not been completed, the council, as a condition precedent to the approval of the map, shall require the subdivider to enter into an improvement agreement and to furnish improvement security, as specified in Article XIV of this chapter.

Subdivision Map Act: Pursuant to Section 66452.6 (d) of the Subdivision Map Act delivery to the City Engineer constitutes a timely filing of the Final Map for filing. As such, subsequent actions of the local agency, including but not limited to, processing, approving, and recording, may lawfully occur after the date of expiration of the tentative map.

Environmental Review: The Planning Commission adopted a Mitigated Negative Declaration (MND) in May 2006 for this project. Staff has reviewed applicable Mitigation Measures and has determined that Mitigation associated with map recordation and the adopted MND have been completed.

FINANCIAL CONSIDERATIONS: The subdivision will result in an increase in taxes and utility fees to the City and will increase Fire, Police and other City service costs.

ATTACHMENTS:

- ✓ Nevada City Tech Center Phase 3 Final Map
- ✓ Development Agreement Doc# 20160001067
- ✓ Resolution 2018-XX

FINAL MAP No. NCFM 18-01

NEVADA CITY TECH CENTER

PHASE THREE

A PORTION OF THE NORTHWEST QUARTER OF SECTION 13, TOWNSHIP 16 NORTH, RANGE 8 EAST, M.D.M, IN THE INCORPORATED AREA OF THE CITY OF NEVADA CITY, NEVADA COUNTY, CALIFORNIA.

MARCH 2018

NELSON ENGINEERING
Civil Engineering, Surveying & Land Planning
18881 Wildflower Drive (530) 432-4818
Penn Valley, CA 95946 www.nelsonengineer.com

OWNER'S STATEMENT

THE UNDERSIGNED HEREBY STATE THAT THEY ARE ALL THE PERSONS HOLDING ANY RIGHT , TITLE OR INTEREST IN AND TO THE REAL PROPERTY WITHIN THE SUBDIVISION SHOWN ON THIS MAP; THAT THEY ARE THE ONLY PERSONS WHOSE CONSENT IS NECESSARY TO PASS CLEAR TITLE TO SAID REAL PROPERTY; THAT THEY DO HEREBY CONSENT TO THE PREPARATION AND RECORDING OF THIS FINAL MAP "NEVADA CITY TECH CENTER, L.L.C.".

NEVADA CITY TECH CENTER, L.L.C., a California limited liability company
By: CAMPUS PROPERTIES, LLC, a California limited liability company, Manager
By: Robert and Linda Upton Trust, Manager

By:_____
Robert Upton, Trustee

OWNER'S ACKNOWLEDGMENT

A NOTARY PUBLIC OR OTHER OFFICER COMPLETING THIS CERTIFICATE VERIFIES ONLY THE IDENTITY OF THE INDIVIDUAL(s) WHO SIGNED THE DOCUMENT TO WHICH THIS CERTIFICATE IS ATTACHED, AND NOT THE TRUTHFULNESS, ACCURACY, OR VALIDITY OF THAT DOCUMENT.

STATE OF CALIFORNIA
COUNTY OF _____ S.S.

ON _____ BEFORE ME, _____, NOTARY PUBLIC,

PERSONALLY APPEARED _____

WHO PROVED TO ME ON THE BASIS OF SATISFACTORY EVIDENCE TO BE THE PERSONS WHOSE NAMES ARE SUBCRIBED TO WITHIN INSTRUMENT AND ACKNOWLEDGED TO ME THAT THEY EXECUTED THE SAME IN THEIR AUTHORIZED CAPACITIES, AND THAT BY THIER SIGNATURES ON THE INSTRUMENT THE PERSONS, OR THE ENTITY UPON BEHALF OF WHICH THE PERSONS ACTED, EXECUTED THE INSTRUMENT.

I CERTIFY UNDER **PENALTY OF PERJURY** UNDER THE LAWS OF THE STATE OF CALIFORNIA THAT THE FOREGOING PARAGRAPH IS TRUE AND CORRECT.

WITNESS MY HAND AND OFFICIAL SEAL.

_____ _____
SIGNATURE PRINTED NAME

MY PRINCIPAL PLACE OF BUSINESS IS:_____ COUNTY, CALIFORNIA.

MY COMMISSION No. IS _____ AND EXPIRES ON:_____

TAX COLLECTOR'S STATEMENT

I, TINA M. VERNON, THE OFFICIAL COMPUTING REDEMPTIONS FOR THE COUNTY OF NEVADA, STATE OF CALIFORNIA, DO HEREBY STATE THAT ACCORDING TO THE RECORDS OF MY OFFICE THERE ARE NO LIENS FOR UNPAID TAXES OR SPECIAL ASSESSMENTS COLLECTED AS TAXES AGAINST THE LANDS SUBDIVIDED HEREON, EXCEPT FOR TAXES OR ASSESSMENTS, NOT YET PAYABLE BUT CONSTITUTING A LIEN IS _____.

_____ _____
DATE TINA M. VERNON
NEVADA COUNTY TAX COLLECTOR

CITY COUNCIL'S STATEMENT

THIS IS TO CERTIFY THAT THE CITY COUNCIL OF THE CITY OF NEVADA CITY, STATE OF CALIFORNIA, BY A MOTION ADOPTED AT A MEETING HELD ON THE_____ DAY OF _____, 2018, DID APPROVE FOR FILING THIS FINAL MAP OF "NEVADA CITY TECH CENTER, L.L.C. – PHASE THREE", CONSISTING OF 2 SHEETS. ALL PROVISIONS OF THE SUBDIVISION MAP ACT AND LOCAL ORDINANCES REGARDING DEPOSITS HAVE BEEN COMPLIED WITH THIS _____ DAY OF _____, 2018.

_____ _____
MAYOR CITY CLERK

NOTES:

1. CURRENT VESTING DEED HELD BY: NEVADA CITY TECH CENTER, L.L.C., A CALIFORNIA LIMITED LIABILITY COMPANY PER DEED RECORDED ON MARCH 7, 2006 AS DOCUMENT No. 2006-007273, O.R.
2. AGREEMENT PERTAINING TO THE DISCHARGE OF DRAINAGE WATERS, EXECUTED BY THE GRASS VALLEY GROUP, INC. RECORDED MAY 2, 1985 AS DOCUMENT No. 85-009721, O.R.
3. COVENANTS PERTAINING TO ROAD MAINTENANCE AS CONTAINED IN THE OFFER OF DEDICATION TO THE CITY OF NEVADA CITY, EXECUTED BY THE GRASS VALLEY GROUP, INC. RECORDED MAY 26, 1993 AS DOCUMENT No. 93-018590 AND DOCUMENT No. 93-018592, O.R.
4. TERMS AND PROVISIONS AS CONTAINED IN THAT DEVELOPMENT AGREEMENT BY AND BETWEEN TEKTRONIX, INC. AND THE CITY OF NEVADA CITY RECORDED FEBRUARY 27, 2001 AS DOCUMENT No. 2001-005473, O.R.
5. TERMS AND PROVISIONS AS CONTAINED IN THAT "DECLARATION OF RECIPROCAL EASEMENTS WITH RESTRICTIONS" RECORDED NOVEMBER 27, 2001 AS DOCUMENT No. 2001-042549, O.R.
6. TERMS, CONDITIONS AND PROVISIONS AS CONTAINED IN THE INSTRUMENT ENTITLED "CORRECTION TO PARCEL MAP", BY & BETWEEN TEKTRONIX, INC., GVCA HOLDINGS, LLC AND THE CITY OF NEVADA CITY, DATED AUGUST 2, 2004, RECORDED AUGUST 5, 2004 AS DOCUMENT No. 2004-032878, O.R.
7. ASSIGNMENT AND ASSUMPTION AGREEMENT RELATIVE TO THAT CERTAIN DEVELOPMENT AGREEMENT ENTERED INTO BETWEEN THE CITY OF NEVADA CITY AND TEKTRONIX, INC. RELATIVE TO TEKTRONIX, INC. SITE DEVELOPMENT, BY AND BETWEEN TEXTRONIX, INC. AN OREGON CORPORATION, AND NEVADA CITY TECH CENTER, L.L.C., A CALIFORNIA LIMITED LIABILITY COMPANY, RECORDED MARCH 7, 2006 AS DOCUMENT No. 2006-007275, O.R. AND UPDATED PER NOTE No. 10 BELOW.
8. COVENANTS, CONDITIONS, & RESTRICTIONS AS CONTAINED IN THAT "DECLARATION OF COVENANTS, CONDITIONS, & RESTRICTIONS" FOR THE NEVADA CITY TECH CENTER, LLC RECORDED MAY 19, 2008 AS DOCUMENT No. 2008-012595, O.R.
9. ASSIGNMENT AND ASSUMPTION AGREEMENT RELATIVE TO THAT CERTAIN DEVELOPMENT AGREEMENT ENTERED INTO BETWEEN THE CITY OF NEVADA CITY AND THE NEVADA CITY TECH CENTER, LLC AND KENMAWR-NEVADA CITY, LLC RELATIVE TO SITE DEVELOPMENT AS DESCRIBED IN DOCUMENT RECORDED JANUARY 20, 2016 AS DOCUMENT No. 2016-0001067, O.R.
10. TOTAL ACREAGE BEING SUBDIVIDED = 19.60 ACRES.

SURVEYOR'S STATEMENT

THIS MAP WAS PREPARED BY ME OR UNDER MY DIRECTION AND IS BASED UPON A FIELD SURVEY IN CONFORMANCE WITH THE REQUIREMENTS OF THE SUBDIVISION MAP ACT AND LOCAL ORDINANCE AT THE REQUEST OF NEVADA CITY TECH CENTER, LLC IN NOVEMBER 2017. I HEREBY STATE THAT THIS SUBDIVISION MAP SUBSTANTIALLY CONFORMS TO THE APPROVED OR CONDITIONALLY APPROVED TENTATIVE MAP, IF ANY.

_____
KEVIN J. NELSON, L.S. 8423
REGISTRATION EXPIRES 12/31/18

PROFESSIONAL LAND SURVEYOR
KEVIN J. NELSON
No. 8423
Exp. 12/31/18
STATE OF CALIFORNIA

CITY SURVEYOR'S STATEMENT

THIS MAP HAS BEEN EXAMINED BY ME, AND THE SUBDIVISION SHOWN IS SUBSTANTIALLY THE SAME AS IT APPEARED ON THE TENTATIVE MAP AND ANY APPROVED ALTERATIONS THEREOF AND PROVISIONS OF THE SUBDIVISION MAP ACT AND LOCAL ORDINANCES APPLICABLE AT THE TIME OF THE APPROVAL OF THE TENTATIVE MAP HAVE BEEN COMPILED WITH AND I AM SATISFIED THAT THIS FINAL MAP IS TECHNICALLY CORRECT THIS _____ DAY OF _____, 2018.

_____
BRYAN K. McALISTER, L.S. 9199
REGISTRATION EXPIRES 03/31/19
CITY SURVEYOR

PROFESSIONAL LAND SURVEYOR
BRYAN K. McALISTER
No. 9199
Exp. 03/31/19
STATE OF CALIFORNIA

COUNTY RECORDER'S STATEMENT:

FILED THIS _____ DAY OF _____, 2018 AT _____ __.M.
IN BOOK _____ OF SUBDIVISIONS, AT PAGE _____, AT THE REQUEST OF ROBERT UPTON.

DOCUMENT NO.: _____ GREGORY J. DIAZ
COUNTY RECORDER

FEE:_____ BY:_____
DEPUTY

FINAL MAP No. NCFM 18-01

NEVADA CITY TECH CENTER

PHASE THREE

A PORTION OF THE NORTHWEST QUARTER OF SECTION 13, TOWNSHIP 16 NORTH, RANGE 8 EAST, M.D.M, IN THE INCORPORATED AREA OF THE CITY OF NEVADA CITY, NEVADA COUNTY, CALIFORNIA.

MARCH 2018

NELSON ENGINEERING
Civil Engineering, Surveying & Land Planning
18881 Wildflower Drive
Penn Valley, CA 95946
(530) 432-4818
www.nelsonengineer.com

BASIS OF BEARING:

THE BASIS OF BEARINGS OF THIS SURVEY IS BASED ON THE FOUND MONUMENTS OF THAT CERTAIN SUBDIVISION MAP TITLED NEVADA CITY TECHNOLOGY CENTER–PHASE ONE RECORDED ON AUGUST 4, 2006 IN BOOK 8 OF SUBDIVISION MAPS AT PAGE 155, NEVADA COUNTY RECORDER'S OFFICE.

LEGEND:

- . . . SET 5/8" REBAR w/ PLASTIC CAP L.S. 8423
- . . . FOUND 3/4" IRON PIPE w/ TAG, L.S. 4370 PER (R1)
- . . . FOUND 3/4" IRON PIPE w/ TAG, R.C.E. 13309 PER (R1) UNLESS OTHERWISE NOTED
- . . . NOTHING FOUND, NOTHING SET
- (R1) . . . RECORD INFORMATION PER BOOK 8 OF SUBS AT PAGE 155

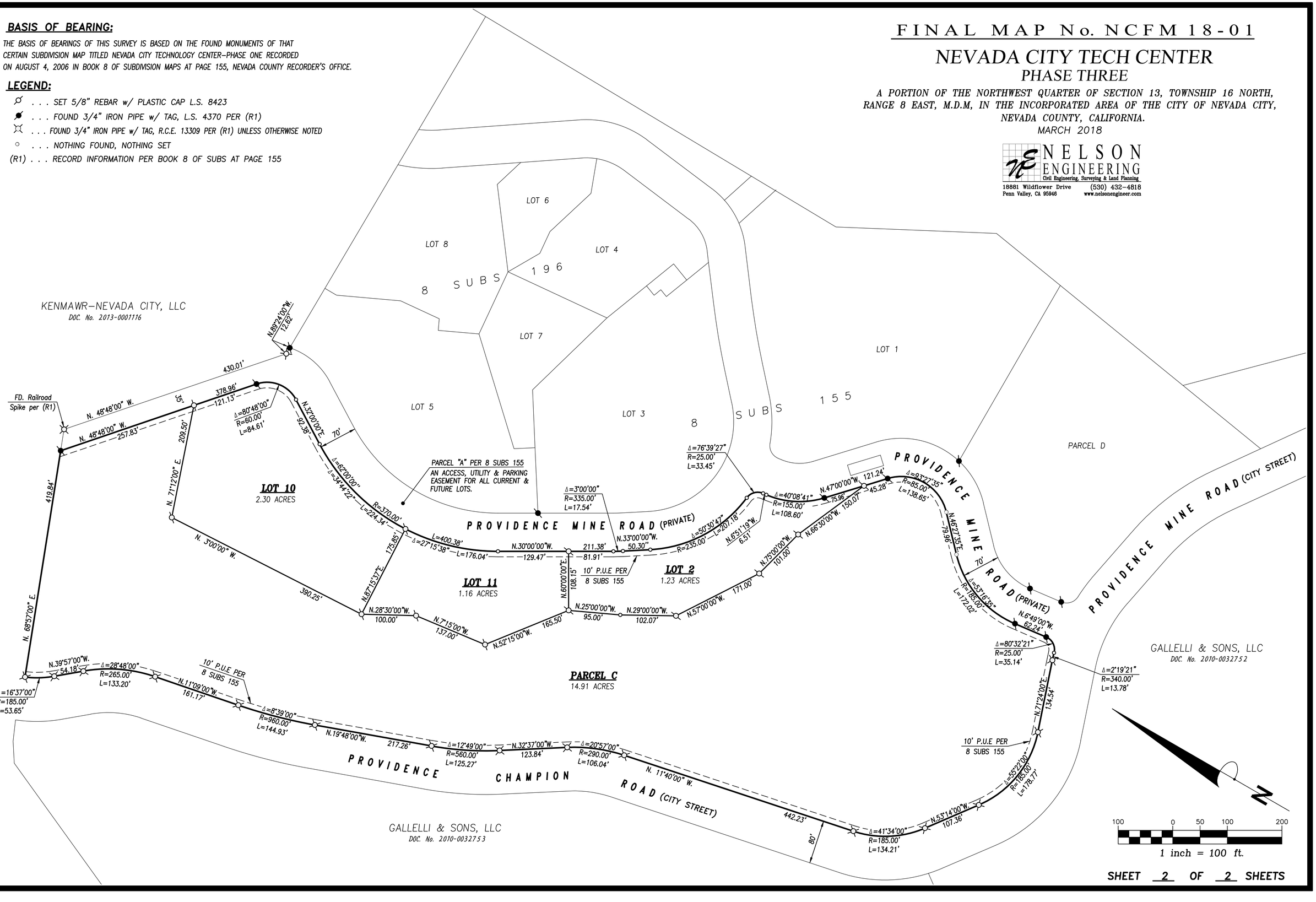

32
NF

Nevada County Recorder
Gregory J. Diaz
Document#: 20160001067
Wednesday January 20 2016, at 08:55:52 AM

Paid: CP

RECORDING REQUESTED BY:

CITY OF NEVADA CITY

WHEN RECORDED RETURN TO:

CITY OF NEVADA, CITY
317 Broad Street
Nevada City, CA 95959

Space Above for Recorders Use

DEVELOPMENT AGREEMENT

This Development Agreement (hereinafter sometimes referred to as this "Agreement") is made and entered into this 12th day of August, 2015, by and between the CITY OF NEVADA CITY, a municipal corporation in the State of California (hereinafter "City"), and

NEVADA CITY TECH CENTER, LLC
12555 Dunbar Road
Glen Ellen Ca 95442, and

KENMAWR-NEVADA CITY, LLC
~~530 Madison Avenue~~ c/o Steven Klein
~~New York, NY 10022~~ 210 East 68th St Apt 6C
New York, NY 10065

(hereinafter collectively, "Owner")

RECITALS

1. Owner owns in fee that real property located within the City of Nevada City and more particularly described in Exhibit "A" hereto and incorporated herein by this reference, hereinafter called the "Subject Property."

2. Owner desires to continue development of a business park project on the Subject Property consisting of approximately 400,000 square feet of light industrial space, and 20,000 square feet of related facilities, hereinafter called the "Project." Owner may also desire to subdivide the Subject Property into two or more legal parcels for purposes of sale, lease, or finance. At the initial approval of dividing the subject property into two parcels by prior owner Tektronix, Inc. it was been determined that half the approved development would flow to each half of the property, now in separate ownership. The two original parcels are designated as Parcels 1 and 2 on Exhibit C attached hereto and made a part hereof, and each of these two parcel is allocated 200,000 square feet of building space and 10,000 square feet of related ancillary facility space.

SK

3. The Project shall increase the employment base of the City of Nevada City and shall further have a substantial positive beneficial impact on City financial resources.

4. The City, in accordance with applicable local and state laws, ordinances, and regulations, previously approved General Plan Amendment No. 84-18, Zoning Amendment No. 84-9, Site Plan No. 84-17, a Development Agreement By and Between the City of Nevada City and Grass Valley Group Relative to Grass Valley Group Site Development, dated November 12, 1985 (hereinafter "1985 Development Agreement"), and Annexation No. 36; and all terms and all remaining applicable conditions of said permits and approvals are as set forth in Exhibit "B" and incorporated herein by this reference; and further, that said terms and conditions shall be hereinafter called "The Development Program."

5. Other Prior City Actions:

(a) The City Planning Commission and the City Council previously approved the Final Environmental Impact Report (hereinafter "Final EIR") prepared for the Project on August 13, 1984, and the City hereby concurs in and ratifies the certification that said Final EIR has been completed in accordance with the California Environmental Quality Act and all State and local ordinances and guidelines pertaining thereto.

(b) The City Planning Commission and the City Council previously unanimously approved a further extension of this Development Agreement by Ordinance 2000-07, including environmental findings, adopted on December 11, 2000, and the Development Agreement was filed as Document Number 2001-0005473 in Nevada County Official Records on February 27, 2001. The City also approved and the then owner filed a parcel map dividing the property into two major parcels as shown on the parcel map filed in Book 19 of Parcel Maps at Page 74, Nevada County, CA official records. Said parcels are shown as Parcel 1 and Parcel 2 on Exhibit C attached hereto and made a part hereof. Said map included a companion reciprocal access, utility, and maintenance agreement filed as Document No. 2001-0042549, Nevada County Official Records, and all lands within the Project remain subject to this document or as amended.

(c) The City Council approved a tentative final map in the southerly portion of the property for Nevada City Tech Center LLC on February 14, 2006, which included an overall Site Plan Amendment to allow buildings and parking to flow through both Zones I and II, subject to City design control. The City filed a Notice of Exemption for this approval. Portions of the approved tentative final map have been filed and completed.

(d) The City Planning Commission and the City Council previously unanimously approved a general plan amendment and zone change for portions of the Subject Property by Ordinances 2011-03 and 2011-04, on January 12, 2011, zoning portions of previous development agreement Zone III to allow housing, recognizing that a housing mix could serve the business park well by reducing traffic and off-site impacts. The zoning also implement parts of the City's housing element, providing an area of use-by-right with up to 16 units per acre. This housing area is now designated as development agreement Zone IV in this development agreement extension. The City filed a Notice of Determination for a Mitigated Negative Declaration for this zoning approval.

SC

6. In order to complete the Project, construct all necessary project related improvements and commence the use of the Subject Property in conformance with the Development Program additional governmental approvals required from the City do and shall consist of building permits, architectural design approval in conformance with City architectural review requirements. Building permit and architectural approval are deemed ministerial in that City approval is mandatory in the event the improvement designs submitted by the Owner conform to presently adopted ordinances, rules and regulations of the City.

7. The Owner hereby represents and the City hereby acknowledges that the Owner is the successor in interest to the Grass Valley Group, identified as the Owner in the 1985 Development Agreement, and Tektronix, Inc., identified as the Owner in the 2000 Development Agreement extension. The City and Owner hereby acknowledge the repeal of the earlier development agreements dated November 12, 1985 and December 22, 2000, filed as Document Numbers 85-27746 and 2001-0005473, respectively, in the office of the Nevada County Recorder. The City hereby finds and agrees that no further environmental review or documents are or shall be required to adopt t his Agreement.

8. The City zoning ordinance sets forth procedures and regulations relating to the consummation of development agreements in conformance with and in furtherance of the purposes of California Government Code Section 65864 et seq.

9. Owner has prepared, and City has amended through prior City actions, a "Land Use Plan" of the subject property that is attached hereto as Exhibit "C" and incorporated herein by this reference. City hereby finds and agrees that said Land Use Plan is in conformance with the Development Program. Said Land Use Plan is intended to remain intact regard less of any future land division of the Subject Property.

10. The City, in consideration of Owner's agreement to develop the Project in accordance with the conditions of the approved Development Program, Land Use Plan, and the terms of this Agreement, desires and agrees to vest certain development rights in the Subject Property and process any remaining applications for development permits or entitlements for use and development of the Subject Property pursuant to the approved Land Use Plan expeditiously and in accordance with the terms of this Agreement and applicable state and local laws.

11. City, in consideration of Owner's agreement herein to develop the entire Project in accordance with the Development Program and Land Use Plan, desires and agrees to assure that Owner may proceed and complete the Project, and in accordance with those policies, rules, regulations, ordinances, design, improvement and construction standards and specifications, as such rules, regulations, ordinances and policies exist on the date of approval of this Agreement, subject to certain exceptions provided for herein.

12. The City Council has previously approved the Land Use Plan for the Project attached hereto as Exhibit "C", and finds that said Plan and this Agreement is in conformance with the City General Plan and applicable state and local law and that their implementation is in the best

>C

interest of the City and the health, safety and welfare of its residents, all in furtherance of the legislative purpose set forth in California Government Code Section 65864 et seq.

NOW, THEREFORE, it is agreed by the parties hereto as follows:

ARTICLE I.

GENERAL PROVISIONS

1.1 Property Subject to the Agreement. All of that real property located in the City of Nevada City, State of California, described in Exhibit "A", shall be subject to this Agreement. It is intended and determined that the provisions of this Agreement shall constitute covenants which shall run with the Subject Property and the benefits and burdens hereof shall bind and inure to all successors in interest to the parties hereto relative to all portions of the Subject Property. The applicable provisions of this Agreement apply to each parcel and, in the event that the Subject Property is further divided into more legal parcels, the applicable provision of this Agreement shall apply to each and every parcel.

1.2 Term. The term of this Agreement shall commence upon the effective date of the resolution approving this Agreement and shall extend for a period of fifteen (15) years thereafter, unless said term is extended by circumstances set forth in Section 4.4 of this Agreement or by mutual consent of the parties hereto. Following the expiration of said term, this Agreement shall be deemed terminated and have no further force and effect.

1.3 Parties to the Agreement.

(a) City of Nevada City. The City of Nevada City is a political subdivision of the State of California, exercising general governmental functions and powers. The principal office of the City is located at 317 Broad Street, Nevada City, California 95959. "City" as used in this Agreement refers to the City of Nevada City, California, and any assignee or successor to its rights, powers and responsibilities with respect to said property. "Council" as utilized herein refers to the City Council of the City of Nevada City.

(b) The Owner. All references to "Owner" in this Agreement refer to both of the following, whose principal business addresses for the purposes of this Agreement are as shown:

NEVADA CITY TECH CENTER, LLC
12555 Dunbar Road
Glen Ellen Ca 95442

and

SR

KENMAWR-NEVADA CITY, LLC
530 Madison Avenue
New York, NY 10022

1.4 Assignment and Assumption. Owner shall have the right to sell, assign, or transfer this Agreement with all the rights, title and interests therein to any person, firm or corporation at any time during the term of this Agreement. Such assignment and assumption may apply to all or portions of the Subject Property if it is subdivided into two or more legal parcels for purposes of sale, lease, or finance. The conditions and covenants set forth in this Agreement and incorporated herein by exhibits shall run with the land and the benefits and burdens shall bind and inure to the benefit of the parties. Owner shall provide City with a signed and completed copy of the Assumption Agreement as provided for in Exhibit "E". Owner shall provide City with written notice of its intent to sell, assign or transfer this Agreement at least thirty (30) days in advance of such action. Express written assumption by such purchaser, assignee or transferee, to the satisfaction of the City Attorney, of the obligations and other terms and conditions of this Agreement with respect to the Subject Property or such portion thereof sold, assigned or transferred, shall relieve the Owner selling, assigning or transferring such interest of such obligations so expressly assumed. Any such assumption of Owner's obligations under this Agreement shall be deemed to be to the satisfaction of the City Attorney if executed in the form of the Assumption Agreement in Exhibit "E" and incorporated herein by this reference.

1.5 Development Program. "Development Program" as used herein refers to the Project as proposed by Owner and reviewed and approved by City together with only the remaining applicable conditions of approval thereon as set forth in Exhibit "B" hereto, together with any amendments thereto as may be agreed to by the parties from time to time.

1.6 Land Use Plan. "Land Use Plan" as used herein refers to that Land Use Plan Map attached hereto as Exhibit "C". Said Land Use Plan may be amended from time to time by mutual consent of the parties hereto and in conformance with the provisions of Government Code Section 65868. The term Land Use Plan herein shall include any such amendments properly approved and executed. Notwithstanding the fact that the Subject Property is zoned LI-Light Industrial, the only uses permitted on the Subject Property are the permitted, conditional, and accessory uses consistent with City's prevailing regulations for the EC-Employment Center zoning district and including these additional land uses: Permitted accessory uses typically associated with the technological, research and development, and a digital campus, such as classrooms, child care facilities, and other similar uses that support such a business.

1.7 Notices, Demands and Communications among the Parties. Formal written notices, demands, correspondence and communications between the City and Owner shall be sufficiently given if dispatched by registered or certified mail, postage prepaid, return receipt requested, to the principal offices of the City and Owner. Such written notices, demands, correspondence and communications may be sent in the same manner to such other persons and addresses as either party may from time to time designate by mail as provided this section.

SK

1.8 Amendment. This Agreement may be amended from time to time by mutual consent of the parties hereto and in accordance with the provisions of Government Code Section 65868 and any procedures adopted by the City of Nevada City. The term "Development Agreement" or "Agreement" herein shall include any such amendments properly approved and executed.

1.9 Estoppel Certificates. Either Party may, at any time, and from time to time, deliver written notice to the other Party requesting such other Party to certify in writing that to the knowledge of the certifying Party:

(1) This Agreement is in full force and effect and is a binding obligation of the Parties;

(2) This Agreement has not been amended or modified and, if so amended, to identify the nature and dates of such amendments;

(3) No current uncured default in the performance of the requesting Party's obligations under this Agreement exists or, if in default, the nature and amount of any defaults;

(4) This Agreement has terminated with respect to a Parcel, and such Parcel has been released from this Agreement.

(5) Owner shall reimburse City for actual costs of providing Estoppel Certificates, and the City may require an advanced deposit for such costs.

ARTICLE II.

DEVELOPMENT OF THE PROPERTY

ZONES I, II, AND III

2.1 Permitted Uses. The Subject Property shall be used and developed only for such uses as are per mitted by the Employment Center zoning district regulations as set forth in the Zoning Ordinance of the City, and as further defined or restricted by the terms of the Development Program and this Agreement.

2.2 Permitted Location and Intensity of Development. The location and intensity of development of the Subject Property shall be in conformance with the Development Program and the Land Use Plan. Modifications of the location of development from that set forth in the Development Program shall be permitted in conformance with Section 3.2(d) hereof.

2.3 Reservations and Dedications of Land for Public Purposes. Provisions for reservation or dedication of land for public purposes, construction, installation and extension of public improvements, and other terms and conditions of development relevant thereto shall be those set forth in the Development Program (Exhibit "B"), Land Use Pl an (Exhibit "C"), the herein Agreement and as set forth in the applicable ordinances, rules, regulations and official policies of the City in force at the time of approval of this Agreement.

CL

2.4 Phasing of Development. The completion of the Project shall be phased based on the growth demands of the owner and of prevailing market demands.

2.5 Rules, Regulations and Official Policies: With regard to the development of the Subject Property and completion of the Project, the City rules, regulations, ordinances, laws, general and specific plans an d official policies governing development, density, permitted uses, improvement standards and specifications, public services fees and charges, and environmental considerations shall be those provided by this Development Agreement and otherwise in force and effect upon the commencement of the term of this Agreement. Notwithstanding the above, the parties agree that prevailing building code technical design standards shall apply during the course of Project completion.

2.5.1 The City may thereafter, during the term of this Agreement apply only such newer, modified rules, regulations, ordinances and laws which are not in conflict with this Agreement and the rules regulations, ordinances and laws in effect on the date of this Agreement. This Section shall not preclude the application to development of the Subject Property such changes in City laws, regulations, plans or policies specifically mandated and required by changes in state or federal laws or regulations. In the event that such changes in state or federal laws prevent or preclude compliance with one or more provisions of this Agreement and implementation of the Land Use Plan, the parties shall take appropriate actions as may be required by Section 3.3 of this Agreement.

2.5.2 Application, processing and inspection fees as set forth in the City ordinances and regulations shall be those fees in effect at the time the fee is payable and shall apply to this Project pursuant to this Agreement.

2.5.3 Except as provided herein, this section shall not be construed to limit the authority or obligation of the City to hold necessary public hearings, to limit discretion of City or any of its officers or officials with regard to rules, regulations, ordinances, laws and entitlements of use which require the exercise of discretion by the City or any of its officers or officials. In no event shall subsequent discretionary or ministerial action or inaction of the City prevent the development of the Subject Property for the uses and to the density and intensity of development as set forth in the Land Use Plan and Development Program or render implementation of this Agreement impossible or economically infeasible. City shall not be responsible for project impairment solely caused by mandated changes in Federal or State laws and regulations.

2 .6 Special Development Fees and Improvements: Owner shall pay specified development fees and install off-site road improvements as follows:

(a) Road Improvements: The City Council finds that the owner has previously completed the road improvements generally described in Site Plan condition of approval No. 19 as more specifically described in Exhibit "D" attached hereto and incorporated herein by this reference.

(b) Traffic Mitigation Fees:

(1) Prior to issuance of a Certificate of Occupancy as to any phase of the Project, Owner shall pay to the City a sum equal to not more than One Hundred and Forty Dollars ($140.00) times the number of parking spaces required to be installed by Nevada City Ordinance No. 85-4 necessary to serve the structure for which occupancy is desired by Owner. Should the owner install parking spaces in excess of those required by said City Ordinance, said additional spaces shall not be included in the traffic fee calculation.

(2) Based on the Owner's previous completion of the road improvements as indicated in Subsection (a) that primarily benefit the general public, which improvements are described in Section (b) of Exhibit "D", the owner has a current credit balance of 332 pre-paid parking spaces distributed as 238 spaces prepaid for Parcel 1 and 94 spaces prepaid for Parcel 2.

(3) City has retained the funds paid by owner in a separate account and has applied the same for the purpose of installing improvements to the regional and local transportation system necessary to mitigate the impacts caused by the development of the Project. Compliance with the herein Subparagraph is deemed full satisfaction of Site Plan condition of approval No. 22.

(4) The completion of the off-site improvements described in Exhibit "D", together with the on-going requirement to pay additional per-parking space fees, shall constitute the traffic mitigation for the Project, and additional construction consistent with the Development Program shall be exempt from the traffic mitigation component of the City's prevailing AB1600 Development fees.

(c) Fire Protection Fee: Owner has previously paid a fire protection fee in the sum of Fifteen Thousand Dollars ($15,000.00), which funds have been applied by the City to secure fire service facilities, equipment and manpower necessary to serve the Project. Said fee shall apply only to the development shown on Site Plan No. 84-17, and any further development may be subject to additional fees. All project development shall be subject to the prevailing fire department annual parcel charge as applied throughout the City. However, the prepayment of t his fee constitutes full development fee mitigation of fire service impacts, and further development of the Project consistent with the Development Program shall be exempt from the fire department component of the City's prevailing AB 1600 Development fees.

(d) Sewage Treatment Facility and Connection Fee:

(1) Owner shall pay a onetime Sewage Treatment Facility Fee to the City, a sum equal to $2.657/gallon/day of sewage effluent requiring treatment generated by the Project. Said fee shall be due and payable for each phase of the Project for which Owner requests occupancy prior to issuance of a Certificate of Occupancy.

(2) Owner shall pay a onetime sewage service connection fee of $4.173/gallon/day of sewage effluent requiring treatment generated by the Project, which shall be due and payable at the same time as the fee provided for in sub-section (d)(1), above.

SR

(3) In addition to the above sewer service related fees Owner shall be solely responsible for the cost of such works of improvement as may be necessary to connect Project sewage transmission lines with City transmission facilities.

(4) Payment of the herein sewage service related fees by Developer shall be deemed to fully satisfy the requirements of Site Plan Condition of Approval No. 42 with respect to sewage service. Acceptance of sewage fee payment by City shall constitute full satisfaction of Site Plan Condition of Approval No. 33.

(5) Payment of the fees outlined above constitute mitigation for the project and future development of the Project consistent with the Development Program shall be exempt from the sewer component of the City's prevailing AB 1600 Development Fee Program.

(6) Owner shall be required to comply with all existing and later adopted ordinances regarding discharge into the City sewer system. Further, Owner shall not discharge into the City sewer system any substance in sufficient quantity to injure or interfere with any sewage treatment process or cause water quality violations.

(e) Special Fees. The parties acknowledge and agree that the Special Fees and road improvement obligations set forth in this Section shall constitute the sole fees that may be imposed on Owner for the purpose of securing the public services described herein as a condition of Project implementation and use of the Subject Property in conformance with the Land Use Plan and Development Program and the herein Agreement. One purpose of the herein Special Fees provisions is to provide a ministerial means of determining fee and improvement obligations imposed by Site Plan conditions of approval. Owner acknowledges and agrees that certain existing City ordinances and regulations provide for additional public service related charges (for example - plan check and inspection fees), and it is not the intent of the herein Section to preclude the imposition of such charges.

(f) AB 1600 Development Fees. Owner shall be responsible for payment of the prevailing AB 1600 Development fee for future project development, excepting the components for traffic, fire, and sewer, as outlined above. Said fees shall be paid prior to the issuance of a Certificate of Occupancy and shall be based on the gross square footage and use for the building being occupied.

(g) Sales Tax. To the extent reasonably feasible, Owner will implement tax reporting procedures which will provide Nevada City the greatest benefit from California sales and use tax revenues. Such procedures may include designating the City of Nevada City as the point of sale for sales tax and use for self-reporting use tax under regulation 1699 on out of state purchases of good s used in the City of Nevada City in accordance with the rules outlined in SB 100, and reporting the City of Nevada City as the location of construction costs as allowed by the California State Board of Equalization per their December 1994 amendment to Regulation 1806. Owner shall not be obligated to implement procedures contrary to the sales and use tax laws or regulations of California or any other state. In the event Owner or any of its assigns or successors in interests lease the Subject Property hereafter, Owner will include this paragraph in such lease.

SK

ZONE IV

2.7 City Review and Approval. Development of the residential portion of the Subject Property is pending at the time of the extension of the herein development agreement, and said Zone IV development approval shall be subject to the City's ordinary development review and tentative map approval processes.

2.8 Prior Environmental Review. The Residential Area general plan and zoning designations were subject to overall environmental review with the adoption of Ordinances 2011-03 and 2011-04. Development details during the City's ordinary development review and tentative map processes, shall include subsequent environmental review and appropriate mitigations based on the site plan specific public reviews under City ordinances, General Plan Housing Element, and the California Environmental Quality Act (CEQA).

ARTICLE III

DEVELOPMENT PROGRAM

3.1 Owner. Owner agrees to develop the property in conformance with the terms of this Agreement, including the terms and conditions of development set forth in the Development Program. Improvement scheduling or dates or times of performance of either party hereto may be subject to revision from time to time as mutually agreed in writing. Such revisions are within the framework of this Agreement as presently drafted and executed and do not constitute contract amendments requiring new notice and hearing under State and local law.

3.2 The City

(a) The City hereby agrees that it will accept for processing, review and approval all applications for development permit s or other entitlements for use of the Subject Property necessary to implement the Land Use Plan, the Development Program and the herein Agreement provided that such applications are in conformance here with.

(b) In all instances, the City shall inform Owner upon request of necessary submission requirements for each application for permit or other entitlements for use in advance and review and schedule such application for Planning Commission and/or City Council action pursuant to the times set forth in this Section. Should the City fail to act within said time limitations, Owner may elect to take other action under Article IV hereof.

(c) In addition to its contractual obligations to cooperate with Owner in implementing the project in a timely fashion, City acknowledges that, in any event, it must take action upon the application for development permits or other entitlements for use necessary to implement the Land Use Plan in this Agreement within the time limitations established under existing or subsequently amended State and local planning, zoning, environmental, and subdivision laws, or be subject to the additional penalties set forth herein.

(d) (1) Owner may submit building, parking, and circulation improvement plans for portions

SK

of the Project located in "Zone I - Primary Use Area and Zone II –Secondary Use Area as shown on Exhibit C the Land Use Plan describing modifications in building and related improvement locations and the size of individual structures different from that shown on the approved original Site Plan without Site Plan amendment or further environmental review if such modifications are otherwise consistent with the terms of said Site Plan and this Agreement.

(2) The submittal of plans by Owner for building permit approval proposing development in "Zone III - Open Space/Reserved Development Area" shall require Site Plan amendment and amendment of the herein Agreement, actions subject to the discretionary approval authority of the City, including a determination of whether existing environmental documents are adequate to address the impact of any said amendment.

(3) The Residential District in Zone IV shall be subject to ordinary City design review, environmental review, and conditional approval. See also Section 2.7 et seq. above.

3.3 Cooperation in Securing Govern mental Permits - Conflict of Laws. The City shall cooperate with the Owner in securing for Owner all permits which may b e required by the City or any other governmental agency.

(a) In the event that State or Federal laws or regulations enacted or otherwise effective after this Agreement has been entered into, or the action or inaction of any other affected governmental jurisdiction prevent or preclude compliance with one or more provisions of this Agreement, or require changes in plans, maps, or permits approved by the City, the parties hereto agree that the provisions of the Agreement shall be promptly modified or suspended as may be necessary to comply with such State or Federal laws or regulations or applicable action or inaction of other affected govern mental jurisdictions so long as such action or inaction is not inconsistent with City law and policy. City shall not be deemed in breach hereof if compliance by City is precluded by said State or Federal laws and regulations, or said govern mental action and inaction.

(b) Each party to this Agreement agrees to extend to the other its prompt and reasonable cooperation in so modifying this Agreement or approved plans, map or permits to allow continued development of the Subject Property to the extent feasible and consistent with the principles and provisions of this Agreement.

ARTICLE IV

DEFAULT, REMEDIES, TERMINATION

4.1 General Provisions.

(a) Subject to extensions of time by mutual consent in writing or as set forth in Section s 4.2 and 4.3 hereof, failure or delay by either party to perform any term or provision of this Agreement constitutes a default under t his Agreement.

54

(b) In the event of default or breach of t his Agreement or any of its terms or conditions, the party alleging such default or breach shall give the breaching party not less than thirty (30) days' notice in writing, measured from the date of certified mailing, specifying the nature of the alleged default and, where appropriate, the manner in which said default may be satisfactorily cured. During any such thirty-day period of curing, the party charged shall not be considered in default for purposes of termination or institution of legal proceedings.

(c) After proper notice and the expiration of said thirty-day cure period, the other party to this Agreement, at its option, may institute legal proceedings pursuant to Section 4.5 hereof or give notice of intent to terminate this Agreement pursuant to California Government Code Section 65868. The matter shall be scheduled for consideration and reviewed in the manner set forth in California Government Code Sections 65864 et seq. by the City of Nevada City within thirty (30) days after notice of intent to terminate.

(d) Following consideration of the evidence presented before the City of Nevada City, either party alleging a default by the other party may, at its option, give written notice of termination of this Agreement to the other party by certified mail. Written notice of termination of this Agreement shall be effective immediately upon certified mailing to the defaulting party.

(e) Evidence of default by either party may also arise in the course of a regularly scheduled periodic review of this Agreement pursuant to California Government Code Section 65865.1. If either party determines that the opposing party is in default following the completion of t he normally scheduled periodic review of progress under the Agreement, it may at its option, give, by certified mail, written notice of termination of this Agreement to the opposing party, specifying therein the alleged nature of the default, feasible actions to cure said default where appropriate, and granting the alleged defaulting party thirty (30) days in which t o cure said default. If the alleged default is not cured within thirty (30) days or the defaulting party waives its right to cure such alleged default, this Agreement shall be deemed terminated thirty-one (31) days from the date of mailing of the notice of intent.

(f) Failure or delay in giving notice of default pursuant to this Section shall not constitute a waiver of any default, nor shall it change the time of default.

(g) Except as otherwise expressly provided in this Agreement, any failure or delay by either party in, asserting any of its rights or remedies as to any default shall not operate as a waiver of any default or of any such rights or remedies or deprive either such party of its right to institute and maintain any actions or proceedings which it may deem necessary to protect, assert or enforce any such rights or remedies.

4.2 Default of Owner.

(a) The City shall, at least once every twelve (12) months during the term hereof, review the good faith substantial compliance of Owner with the terms of this Agreement. Such periodic review shall be limited in scope to compliance with the terms of this Agreement, and notice shall be provided pursuant to California Government Code Sections 65867 and 65868, including a

SK

statement that any review may result in amendment or termination of this Agreement, after notice and hearing as provided in Section 4.1.

(b) In connection with each periodic review, the City's finding of good faith compliance by Owner with the terms of the Agreement shall conclusively determine said issue up to the date of said review for purposes of future periodic reviews or legal action between the parties.

(c) The City shall deposit in the mail to Owner a copy of all staff reports and, to the extent practicable, related exhibits concerning contract performance a minimum of ten (10) calendar days prior to such review or action upon the Development Agreement by the Planning Commission or the City Council.

(d) Upon request by Owner, Owner shall be permitted an opportunity to be heard orally and in writing regarding its performance under this Agreement before each appropriate Departmental, Planning Commission or City Council review or action on the Agreement.

4.3 Default By City.

(a) In the event that the City does not accept, review, approve or issue necessary development permit s or entitlements for u se in a timely fashion as defined by this Agreement, despite a good faith effort by Owner to file timely complete application therefore or the City otherwise defaults under this Agreement, the City agrees that Owner shall in no event be obligated to proceed with or complete the project or any phase thereof, nor shall resulting delays in Owner performance constitute grounds for termination or cancellation of t his Agreement or the loss of density and use rights of Owner hereunder.

(b) Within thirty (30) days after receipt of a written request from Owner, the City shall consent in writing to reasonable adjustment or extension in any time schedule for Owner's performance hereunder.

4.4 Enforced Delay: Extension of Times of Performance. In addition to specific provisions of this Agreement, performance by either party hereunder shall not be deemed to be in default where delays or defaults are due to any of the following factors, the existence and impact of which are satisfactorily demonstrated: war; insurrection; lock-outs; riots; floods; earthquakes; fires; casualties; acts of God; acts of the public enemy; epidemics; quarantine restrictions; freight embargoes; lack of transportation; governmental restrictions or priority; the enactment of conflicting state or federal laws or regulations; new or supplemental environmental regulation; litigation; unusually severe weather; acts or failure to act of any public or governmental agency or entity (other than that, acts or failure to act of the City shall not excuse performance by the City); any abnormal delay in issuance of the permits referred to in Sections 3.2 and 3.3; or any other causes beyond the control or without the fault of the party claiming an extension of time to perform. An extension of time in writing for any such cause shall be granted for the period of the enforced delay, or longer as mutually agreed upon, which period shall commence at the time of the commencement of the cause.

SR

4.5 Institution of Legal Actions. In addition to any other rights or remedies, either party may institute legal act ion to cure, correct or remedy any default; to enforce any covenants or agreements herein or to enjoin any threatened or attempted violation thereof; to recover damages for any default; or to obtain any other remedy consistent with the purpose of this Agreement. Notwithstanding the above; Owner shall not be entitled to recover damages for any loss of profits derived from product sales; in no event shall City be entitled to recover for loss of tax or assessment revenues as a measure of damages; and any monetary damage award shall be limited to compensatory dam ages only. Such legal actions must be instituted in the Superior Court of the County of Nevada, State of California, or in the Federal District Court in the Eastern District of California.

4. 6 Applicable Law/Attorney's Fees. This Agreement shall be construed and enforced in accordance with the laws of the State of California. Should any legal action be brought by either party because of breach of this Agreement or to enforce any provision of this Agreement, the prevailing party in such act ion shall be entitled to all reasonable attorney's fees, court costs and necessary disbursements in connection with such litigation.

ARTICLE V

PROJECT AS A PRIVATE UNDERTAKING

5.1 It is specifically understood and agreed by and between the parties hereto that the subject development is a private development; that the City has no interest in or responsibility for or duty to third parties concerning any of said improvements until such time and only until such time as City accepts the same pursuant to the provisions of this Agreement or in connection with the various subdivision map approvals; and that Owner shall have full power over and exclusive control of the Subject Property herein described, subject only to the limitations and obligations of the Owner under this Agreement.

ARTICLE VI

COOPERATION IN THE EVENT OF LEGAL CHALLENGE TO THIS AGREEMENT

6.1 In the event any legal action is instituted by a third party or other governmental entity or official challenging the validity of one or more provisions of this Agreement, the state and local legislation authorizing the City to enter into this Agreement, or discretionary action and approvals of the City on development permits or other entitlements for use and development of Subject Property pursuant to the approved Land Use Plan and this Agreement, the parties hereto agree to cooperate in defending said action .

ARTICLE VII

ENTIRE AGREEMENT, WAIVERS AND AMENDMENTS

7.1 Counterparts. This Agreement is executed in two (2) duplicate originals, each of which is deemed to be an original. This Agreement consists of fourteen (14) pages and four (4) exhibits,

SE

which constitute the entire understanding and agreement of the parties. Said exhibits are as follows:

Exhibit "A" - Legal Description of Subject Property
Exhibit "B" - Development Program
Exhibit "C" - Land Use Plan
Exhibit "D" - Off-Site Road Improvements

7.2 Entire Agreement. This Agreement integrates all of the terms and conditions mentioned herein or incidental hereto, an d supersedes all negotiations or previous agreements between the parties with respect to al l or any part of the subject matter hereof.

7.3 Waiver. All waivers of the provisions of this Agreement must be in writing and signed by the appropriate authorities of the City or the Owner, and all Amendments hereto must be in writing, signed by the appropriate authorities of the City and the Owner and in a form suitable for recording in the Office of the Recorder, County of Nevada.

7.4 Recordation.

(a) Within ten (10) days of the date of this Agreement, or subsequent Amendments thereto, a copy thereof shall be recorded in the Official Records of Nevada County, California.

(b) Upon completion of contract performance by the parties or revocation of this Agreement, a written statement acknowledging such completion or revocation, signed by the appropriate agents of the City and Owner, shall be recorded in the Official Records of Nevada County, California.

ARTICLE VIII

SEVERABILITY

8. 1 The parties hereto agree that the provisions are severable. If any provision of this Agreement is held invalid, the remainder of this Agreement shall not be affected and shall remain in full force and effect unless amended or modified by mutual consent of the parties.

IN WITNESS WHEREOF, the parties hereto do affix their signatures as follows:

CITY OF NEVADA CITY

By: Jennifer M. Ray
Jennifer M. Ray, Ph.D, Mayor

ATTEST:
By: Niel Locke
Niel Locke, City Clerk

Attach Notary's Acknowledgment

NEVADA CITY TECH CENTER, LLC
By: CAMPUS PROPERTIES, LLC, Manager
By: Robert and Linda Upton Trust, Manager
By: _____
Robert Upton, Trustee

KENMAWR-NEVADA CITY, LLC

By: _____
Steven Klein its Authorized Signatory

CONSENT TO RECORDING of DEVELOPMENT AGREEMENT
RELATIVE TO DEVELOPMENT SITE, PROVIDENCE MINE ROAD

I, the undersigned Mayor of the City of Nevada City, California, pursuant to Ordinance 85-10, hereby consent to the recording of the attached Development Agreement By and Between the City of Nevada City and Nevada City Tech Center LLC and Kenmawr-Nevada City, LLC, relative to Providence Mine Road Site Development.

Date: _____, 2015 By: _____
Jennifer M. Ray, Ph.D, Mayor, City of Nevada City

Attest:

By: _____
Niel Locke, City Clerk, City of Nevada City

EXHIBIT A

Subject Property

Providence Mine Road Development Agreement Property Description:

All that portion of real property located within the incorporated area of the City of Nevada City, County of Nevada, State of California and described as Parcel B on Nevada City Parcel Map 85-01, recorded on July 26, 1985 and filed in Book 17 of Parcel Maps at Page 29, Nevada County, California, EXCEPTING THEREFROM that portion conveyed to the City of Nevada City along the abandoned Rough and Ready Canal for public trail purposes along the northerly line of said Parcel B.

EXHIBIT B

DEVELOPMENT PROGRAM
(ORIGINAL PROJECT CONDITIONS OF APPROVAL: THE PARTIES HERETO ACKNOWLEDGE THAT CERTAIN ORIGINAL CONDITIONS AS MARKED BY AN ASTERISK (*) HAVE BEEN FULLY SATISFIED)

July 12, 1984

Mr. Ken Myers
GRASS VALLEY GROUP. INC
Post Office Box 1114
Grass Valley, California 95945

SUBJECT: GRASS VALLEY GROUP, INC.
General Plan Amendment, P rezoning, Site Plan, and Development Agreement: FINAL EIR and PROJECT.

Dear Mr. Myers:

Please be advised that at their regular meeting of July 12, 1984, the Nevada City Planning Commission took the following actions regarding the above referenced project:

1. REGARDING THE PROJECT ENVIRONMENTAL IMPACT REPORT:

The Planning Commission found that the Final EIR for the Grass Valley Group, Inc. application was adequate and complete, contained all of the information that could reasonably be included, and recommend that the City Council certify that:

A. The final EIR has been completed in compliance with CEQA, and

B. The final EIR was presented to the City of Nevada City, and that the City reviewed and considered the information contained in the final EIR prior to any action on the project.

2. REGARDING THE PROJECT APPLICATIONS:

A. ENVIRONMENTAL FINDINGS: The Planning Commission considered the information in the Final EIR for the project, and found that with mitigations attached to the site plan as conditions of approval, any potential significant adverse effects would be reduced below the level of significance. However, because of the large size of this project and because it will not be completed for another 15 years, the Commission found that it is difficult to accurately predict the environmental impacts caused by the project. Because of this, it is possible that reasonable minds could differ as to whether the project, even after adoption of the mitigation measures, may cause a significant environmental impact. In reviewing the final EIR the Commission noted that the

EIR author pointed to traffic, sewer, water, and air quality as having possible "moderate" impacts, even after mitigation. The EIR author indicated to the City staff that "moderate" impacts should be considered as impacts below the level of significance. However, the Planning Commission incorporated the Findings of Overriding

Consideration, as stated in the attached memorandum from the City Attorney, Mr. James Anderson, dated July 12, 1984, Items 1, 2, 3, and 4 .

B. ANNEXATION: The Planning Commission recommended that the City Council approve the annexation of the project area to the City of Nevada City, subject to the approval of the Nevada County Local Agency Formation Commission (LAFCO).

C. GENERAL PLAN AMENDMENT: The Planning Commission recommended that the City Council amend the General Plan to show the project area as Industrial and Commercial, with the areas as defined by the project application. In making this recommendation, the Commission further recommended that the updated general plan designate the project area as Employment Center, and Office and Professional, with the areas as outlined in the application.

D. PREZONING: The Planning Commission recommended that the City Council prezone the project lands to LI-light industrial and LB-local business, with the areas as defined by the project application. The intent of the Commission is to limit the area represented as Office and Professional to those uses, without retail sales, and the Commission further recognized that development of this area would be subject to future site plan and environmental review.

E. DEVELOPMENT AGREEMENT: The Planning Commission recommended that the City Council enter into a development agreement with Grass Valley Group, Inc., with the agreement to be in a form approved by the City Attorney.

F. SITE PLAN: The Planning Commission approved the site plan submitted by Grass Valley Group, Inc., subject to the following conditions of approval (numbers in parenthesis refer to the applicable mitigation measure(s) outlined in the Final EIR):

*1. The site plan approval is subject to approval of the annexation, general plan amendment, and prezoning by the City Council.

*2. As required by City ordinance 82-1, the applicant shall pay $660.00 in park and recreation fees, prior to final City Council acceptance of the Annexation (following LAFCO action) .

*3. Prior to site disturbance or the issuance of a grading or building permit for any phase of the project, the developer shall submit geotechnical (soils engineering) information as required by the City Engineer, which should provide the following information: The location of mine shafts or tunnels, soil stability limitations, methods of construction in the vicinity of mine shafts or tunnels, and cut/fill slope recommendations. (1, 2, 3, 4, 11)

4. All construction shall be in accordance with the geotechnical recommendations and shall be subject to the approval of the City Engineer with respect to grading, location of improvements, and cut/fill slopes. (3, 8, 9)

5. Prior to site disturbance or the issuance of a grading or building permit for any phase of the project, the developer shall prepare, submit, and obtain approval from the City Engineer of an engineered grading, drainage, and utility plan, showing the extent of clearing and grading, limits of cut/fill slopes, drainage improvements, and erosion control. Any construction beyond the areas indicated on the site plan, which encroaches into areas exceeding 20% cross-slope, shall be planned and implemented in accordance with techniques and specifications required and approved by the City Engineer. Road grades shall be between 0.25% and 15%. Trail systems shall be designed to avoid any geologic hazards. These plans may be submitted in phases. (6, 7, 9, 10, 29)

6. Prior to the issuance of a building permit, the Nevada County Building Department shall approve the foundation and pad design based on the geotechnical study, and shall approve the structural design of the buildings based on applicable earthquake standards. (12, 13, 14, 31)

7. The property owner shall conduct an ongoing maintenance program to fill holes or ground subsidence if and when it should occur. (5)

8. Prior to any site disturbance or the issuance of a grading or building permit, the developer shall prepare an Erosion and Sediment Control Plan, and shall obtain approval of the plan from the City Engineer or the Nevada County Resource Conservation District. The Plan should consider the following features: Temporary and permanent erosion control methods, the possible assignment of an Erosion Control/Water Quality supervisor to the construction team, limiting construction to the dry season (March-October), immediate revegetation of disturbed soils with drought-resistant vegetation, protection of existing vegetation through temporary fencing during construction, removal or stabilization of excavated material before the rainy season, paving of roads and parking areas, washing equipment tires before leaving the site if possible, the use of interceptor ditches to divert water from cut slopes, and the possible use of a sediment ponds or natural marsh to filter runoff. (15 through 28, 30, 36, 51)

9. The engineered drainage plan required by condition number 5 above, shall consider the following objectives: direction of existing and new storm flows away from erosion prone areas, correction of existing drainage runoff, temporary correction of construction related flow increases, incorporation of collection, filtration, and detention facilities, a study of Peck Ravine's capacity and role in controlling surface water flows, and if recommended by the soils study, on-site construction monitoring by an Erosion Control/Water Quality specialist. (32 through 35, 37)

10. To minimize water quality impacts, the developer shall implement a regular street sweeping program and shall implement a regular maintenance schedule of drainage facilities. There shall be no on-site disposal of oil, oil filters, or other contaminants, nor shall salt be used to control frost and ice. If deemed necessary by the City Engineer, oil and grease traps and/or sedimentation settlement areas shall be incorporated into the drainage design of the roads and parking areas. (38 through 42, 52, 54 55)

11. There shall be no development in the riparian area of the property, and any drainage into the riparian area shall be controlled and filtered. (43, 44)

12. A tree removal permit shall be required from t he City of Nevada City by separate application for any tree removal that exceeds 20% the on-site resource. (45)

13. Prior to any site disturbance, the developer shall prepare and submit to the City, a Timber Management Plan that establishes long range management techniques and goals, and emphasizes management for a healthy forest, provides for minimizing insect and disease infestations, provides for wildlife and fire protection, and presents criteria for the use of herbicides for thinning. (46, 47)

14. Flammable brush understory shall be cleared in the vicinity of buildings and parking areas to reduce fire hazard. (48)

15. The use of natural, drought-resistant, non-invasive species for landscaping is encouraged to minimize water consumption for irrigation, and to maximize food, forage, nesting, and shelter habitat for wildlife (49, 50)

16. Chemical toilets shall be provided for construction crews. (53)

*17. Prior to site disturbance, the developer shall prepare and submit engineered improvement plans for reconstruction of Lone Pine Road and the project access road, to the City Engineer for approval. Plan check and inspection fees shall be paid to the City for this review. Improvement plans for improvements to Zion Street, the Ridge/Zion intersection, and the encroachment of Lone Pine Road shall be prepared by the City Engineer at the expense of the developer. No plan check fee will be required for this design work, but inspection fees shall be assessed. The developer shall dedicate any needed right-of-way on Zion Street, and shall offer for dedication the right-of-way along Lone Pine Road. Unless and until this offer is accepted by the City, the maintenance and snow removal on Lone Pine Road shall remain the responsibility of the benefitting property owners.

*18. Prior to issuance of a certificate of occupancy, the developer shall complete the following road improvements:

a. Widen Zion Street with channelization and striping as required by the City Engineer. (57)

b. Improve Lone Pine Road to a width of 24' with encroachment reconstruction to the specifications required by t h e City Engineer, in condition number 17 above. The City Engineer may require const ruction of a temporary turn-around and gate beyond the project access, to prevent casual traffic over private lands, to Deer Creek. (56)

c. The value of the construction of road way improvements on Zion Street and the Zion/Ridge intersection beyond the direct needs of the Grass Valley Group project shall

be credited toward any future mitigation fee programs adopted by the City, as outlined in Condition Number 22 below.

19. Interior parking areas shall be constructed in phases and shall contain 55% regular stalls of 9'x 1 8' and no more than 45% compact stall s of 8'xl 4' (dimensions for 90 parking spaces). Travel aisles shall be 24' wide where two-way traffic is planned. The City Engineer m ay approve parking area dimensions where one-way and/or angled parking spaces are provided, during the review of the grading plan as required by Condition 5, above.

20. The project shall operate using flex-time for employee work hours, as represented by the applicant. (60, 67)

21. As represented by the applicant, the project operation shall encourage the use of car and van pools. The developer will initiate a dialogue with the Gold Country Stage, in an effort to maximize the use of bus service for employee commuting. Bicycle parking facilities and pedestrian access ways shall be provided as a part of the project. (58, 59, 67, 69, 70, 72)

*22. To offset the impacts of the project on traffic in the area of the Gold Flat interchange and Ridge/Zion intersect ion, the applicant shall comply with then-current mitigation fee schedules or programs, as may be adopted by the City Council, applicable to similar development. Mitigation fees may be paid in proportion to phase development, prior to the issuance of a building permit. (61 through 66)

23. Dust shall be controlled during const ruction, by the application of water as needed, immediate revegetation, and minimal site clearance. (68)

24. All permanent noise generating equipment shall be muffled or silenced to limit noise level s to 60 d BA or lower, at the project property line. (71)

25. Development of the project shall substantially comply with the representations of the applicant, incorporating vegetation buffers, entrance treatment, landscaping, and low profile building design. Prior to issuance of a building permit, the developer shall obtain final architectural approval from the Planning Commission under a separate application. (73)

26. All known or newly discovered archaeological or historical resources shall be fenced and protected from construction activity. Permanent treatment and interpretive signing to preserve the features is encouraged. (74, 75)

27. To protect unidentified archaeological features, the plans and contract specifications for site development shall contain a brief summary of identification criteria for construction personnel and a notification procedure to initiate the review of suspected resources by a qualified person. (76, 77, 78)

28. Prior to the issuance of each building permit for phased construction, the developer shall obtain a commitment for water service, and submit evidence of the service to the City. (79)

29. Extension of water service to the site shall be subject to the review and approval of Nevada Irrigation District (NID) unless service areas are adjusted to allow City service. If NID water is used, annexation of the lands outside the District will be required prior to service, unless waived by NID. The developer is encouraged to initiate long term planning discussions and evaluation for the provision of total project water service. (82, 83, 84)

30. Engineered grading plans shall include a landscaping plan using native, drought- resistant species, drip irrigation, and possible use of grey water. (80)

31. Low water flow fixtures shall be used throughout the construction. (81)

32. In order to assure adequate fire protect ion, the developer shall provide a hydraulic analysis to estimate on-site fire flows, and shall obtain City clearance of on-site hydrants and fire protection measures, prior to the issuance of a building permit or any site disturbance. Unless waived by the City, all buildings shall include an engineered sprinkler system with central alarm. Roofing material shall be fire resistant. Other building materials are encouraged to be fire retardant materials. Flammable understory brush shall be cleared within 30' of buildings. (85, 86, 91, 92, 93, 94, 95)

33. Prior to the issuance of each phase building permit, the applicant shall verify that there is sufficient sewage treatment plant capacity and that wastewater discharge standards would not be violated. (87)

34. On-site sewage collection improvements and sewer trunks to the treatment plant shall be reviewed and approved by the City Engineer along with the grading and utility plan required by Condition 5, above. (89)

35. The project sponsor is encouraged to participate in solid waste recycling programs. Site development should be coordinated with the solid waste hauler, if those services are utilized, to provide for adequate dumpster facilities and access. (96)

36. The use, storage, handling, and disposal of any hazardous or toxic materials shall be in strict compliance with Federal, State, and local requirements. Storage facilities shall be properly maintained at all times. (96a, 96d)

37. The applicant shall advise the City Fire Department and California Division of Forestry of the location and type of materials being stored, shall provide those agencies with an emergency spill contingency plan outlining equipment and procedures needed to clean up any spill, and shall provide a list of agencies to be contacted in the event of a spill. (96b, 96c)

38. The project shall be developed in phases, as represented by the applicant.

39. Any development beyond the site plan proposed on the project area, including any future office and professional use, shall be processed under then-current City procedures, including new environmental review. (101)

* 40. The areas adjacent to Deer Creek, and other areas represented by the applicant to remain as open space, shall remain as open space.

* 41. The developer shall dedicate access and utility easements to the City along existing improvements serving the Nevada City Wastewater Treatment Plant. The developer shall also dedicate utility easements as may be required by other utilities providers.

* 42. To offset cumulative impacts on public services, the developer shall comply with then-current mitigation fees or programs, as may be adopted by the City Council, for mitigating the impacts on sewer treatment and collection, fire protection, and water service (if water is provided by the City) .

As indicated herein, City Council action is required on the environmental impact report and project, in order for you to obtain final City approval. The site plan action by the Planning Commission is final, subject to the City Council's approval of the annexation, general plan amendment, and pre-zoning. There is a fifteen day appeal period for site plan conditions. All other components of the application will go to the Council automatically.

Originally signed by:
NEVADA COUNTY PLANNING COMMISSION
/S/W. Lon Cooper, Chairman

PROPOSED ADDITIONAL FINDING
Originally Dated July 12, 1984

RE: GRASS VALLEY GROUP

Because of the large size of this project and because it will not be completed for another 15 years, it is difficult to accurately predict the environmental impacts caused by the project. Because of this, it is possible that reasonable mind s could differ as to whether the project, even after adoption of the mitigation measures, may cause a significant environmental impact. In reviewing the final EIR I note that Kate Burdick points to traffic, sewer, water, and air quality as having possible moderate impacts even after mitigation. In talking with her it does appear that she feels that there will be no significant impact in these areas as long as the mitigation measures are vigorously enforced. However, in view of the potential economic benefit to the City, and in fairness to the applicant, I believe the Commission should deal with the issue of whether it would approve the project even if it were to be determined that the project would have a significant environmental impact on the traffic, water, sewer or air quality.

I recommend that the Commission find that even if the project should be determined to have significant environmental impacts even after mitigation that it approve the site plan and make the following findings:

1. The Planning Commission finds that in view of the size of the project, the fact that it would be a phased development over a 14-year period and that it is extremely difficult to determine how many other projects would be approved in this project's vicinity, that it may be possible that

this project and others that may be approved in the future may contribute to a cumulative decrease in air quality in the future in the project vicinity which is significant. Even if this should occur, the Planning Commission finds that the economic benefit to the City of Nevada City and its citizens from this project more than outweighs any significant environmental impact that may be caused by the decrease in air quality due to the cumulative impact of this project and others in the vicinity.

2. The Planning Commission finds that in view of the size of the project, the fact that it would be a phased development over a 14-year period, and the uncertainty in projecting local government revenue over the next 14 years, it may be possible that in the future this project may have a significant impact on local governments' ability to provide adequate water and sewer treatment in spite of the implementation of the suggested mitigating measures. Even if this should occur, the Planning Commission finds that the economic benefit to the City of Nevada City and its citizens from this project more than outweighs any significant environmental impact on sewer and water treatment systems.

3. The Planning Commission finds that in view of the size of the project, and the fact that it would be a phased development over a 14-year period, that it may be possible that the increased traffic volumes generated by the project, including its contribution to the cumulative traffic volumes in t he project area, may cause in the future a significant environ mental impact in spite of the implementation of the suggested mitigation measures. Even if this should occur, the Planning Commission finds that the economic benefit to the City of Nevada City and its citizens from this project more than outweighs any significant environmental impact that may be caused by the increased traffic generated by the project.

4. The Planning Commission finds that the economic benefit to the City of Nevada City from the project is as follows:

A. The City of Nevada City and its surrounding area have a chronic high unemployment rate and this project will create approximately 2,000 new jobs.

B. The City of Nevada City is currently facing financial difficulty, and the project will generate net revenue to the City of Nevada City in the approximate sum of $200,000 annually at build-out.

Originally signed by
/S/ James R. Anderson City Attorney

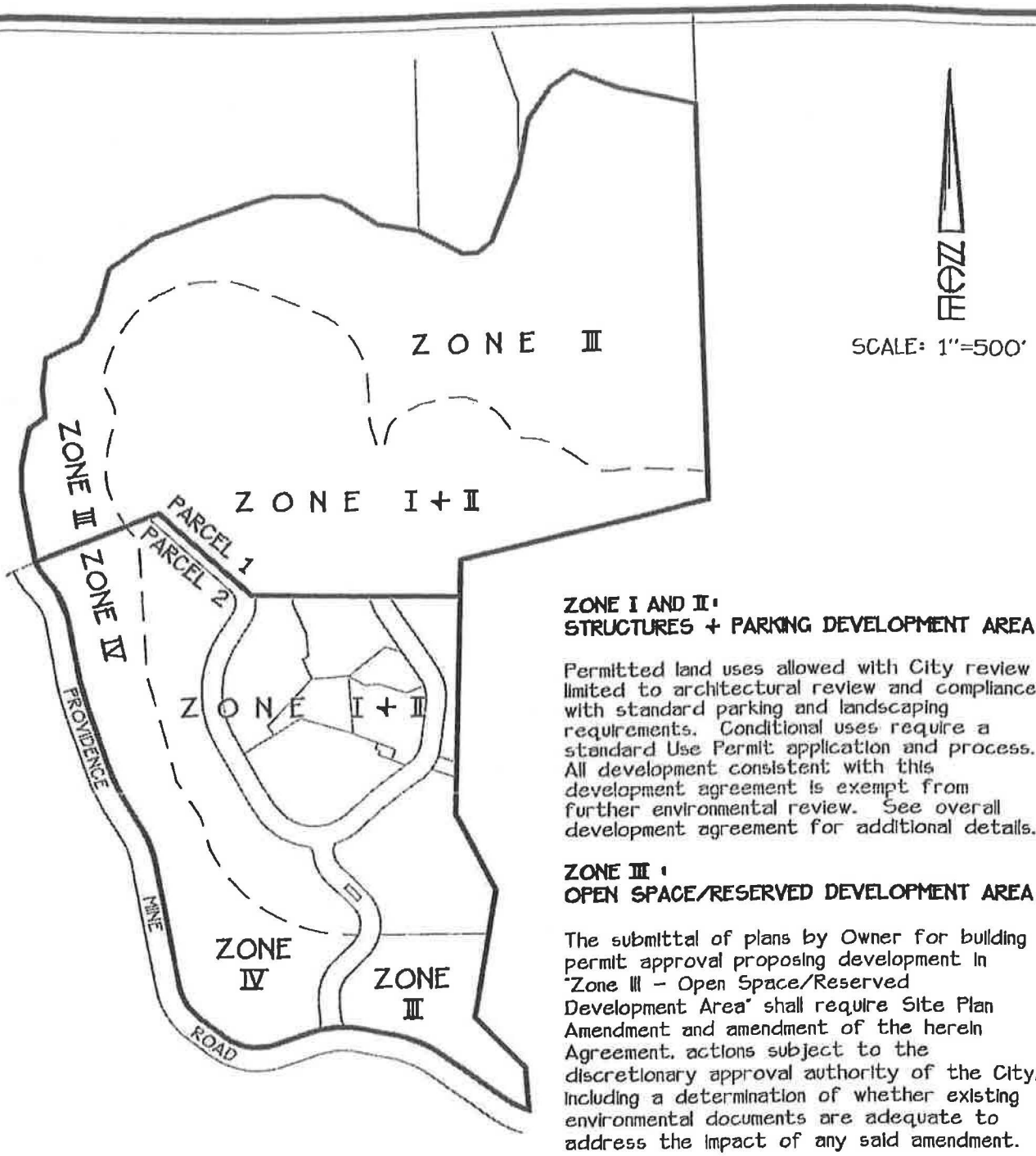

ZONE I AND II:
STRUCTURES + PARKING DEVELOPMENT AREA

Permitted land uses allowed with City review limited to architectural review and compliance with standard parking and landscaping requirements. Conditional uses require a standard Use Permit application and process. All development consistent with this development agreement is exempt from further environmental review. See overall development agreement for additional details.

ZONE III:
OPEN SPACE/RESERVED DEVELOPMENT AREA

The submittal of plans by Owner for building permit approval proposing development in "Zone III - Open Space/Reserved Development Area" shall require Site Plan Amendment and amendment of the herein Agreement, actions subject to the discretionary approval authority of the City, including a determination of whether existing environmental documents are adequate to address the impact of any said amendment.

ZONE IV:
RESIDENTIAL AREA

The development plans by Owner for residential use are in process with the City at the time of this Development Agreement extension. The development proposal shall be subject to the ordinary review and approval process applied to other properties in the City, except for reliance on prior environmental reviews, the General Plan Housing Element, and zoning ordinances.

EXHIBIT "C"
LAND USE MAP

EXHIBIT D

GRASS VALLEY GROUP
NEVADA CITY SITE DEVELOPMENT (ORIGINAL EXHIBIT-
THE PARTIES HERETO ACKNOWLEDGE THAT THE HEREIN ROAD IMPROVEMENTS HAVE BEEN COMPLETED)

Road Improvements:

a. Required road improvements consist of improvements to Zion Street, Nevada City Highway, Gold Fl at Road, Ridge Road, and Providence Mine Road, as defined by the Improvement Plans for Grass Valley Group and Providence Park prepared by Nevada City Engineering, Inc., in April, 1985, as Job Number 85-20.

b. The portion of the road improvements that primarily benefit the general public and therefore are eligible for a credit towards the payment of traffic mitigation fees includes all improvement on the Nevada City Highway, Gold Flat Road, and Ridge Road; and all improvements on Zion Street with the exception of one left-turn lane consisting of aggregate base and paving 10 feet wide x 300 feet long.

STATE OF NEW YORK

COUNTY OF NEW YORK ss

On the 3RD day of December in the year 2015 before me the undersigned personally appeared Steve Klein personally known to me or proved to me on the basis of satisfactory evidence to be the individual whose name is subscribed to the within instrument and acknowledged to me that he/she executed the same in his/her capacity and that by his/her signature on the instrument the individual or the person or entity upon behalf of which the individual acted executed the instrument.

Notary Public

MONICA B. PACIFICO
Notary Public, State of New York
No. 01PA4820213
Qualified In Queens County
Commission Expires Dec. 31, 2018

CALIFORNIA CERTIFICATE OF ACKNOWLEDGMENT

A notary public or other officer completing this certificate verifies only the identity of the individual who signed the document to which this certificate is attached, and not the truthfulness, accuracy, or validity of that document.

State of California)

County of NEVADA)

On Dec. 16, 2015 before me, Connie Crockett, Notary Public
(here insert name and title of the officer)

personally appeared NIEL LOCKE

,

who proved to me on the basis of satisfactory evidence to be the person(~~s~~) whose name(~~s~~) is/~~are~~ subscribed to the within instrument and acknowledged to me that he/~~she/they~~ executed the same in his/~~her/their~~ authorized capacity(~~ies~~), and that by his/~~her/their~~ signature(~~s~~) on the instrument the person(~~s~~), or the entity upon behalf of which the person(~~s~~) acted, executed the instrument.

I certify under PENALTY OF PERJURY under the laws of the State of California that the foregoing paragraph is true and correct.

CONNIE CROCKETT
COMM. #2133852
Notary Public - California
Nevada County
My Comm. Expires Nov. 13, 2019
NRO1 NRO1

WITNESS my hand and official seal.

Signature Connie Crockett (Seal)

Optional Information

Although the information in this section is not required by law, it could prevent fraudulent removal and reattachment of this acknowledgment to an unauthorized document and may prove useful to persons relying on the attached document.

Description of Attached Document

The preceding Certificate of Acknowledgment is attached to a document titled/for the purpose of Development Agreement,

containing 29 pages, and dated August, 2015.

The signer(s) capacity or authority is/are as:

- ☐ Individual(s)
- ☐ Attorney-in-Fact
- ☐ Corporate Officer(s) _____ Title(s)
- ☐ Guardian/Conservator
- ☐ Partner - Limited/General
- ☐ Trustee(s)
- ☑ Other: CITY CLERK

representing: NEVADA CITY CA
Name(s) of Person(s) or Entity(ies) Signer is Representing

Additional Information

Method of Signer Identification

Proved to me on the basis of satisfactory evidence:
○ form(s) of identification ○ credible witness(es)

Notarial event is detailed in notary journal on:
Page # _____ Entry # _____

Notary contact: _____

Other

☐ Additional Signer(s) ☐ Signer(s) Thumbprint(s)

☐ _____

© Copyright 2007-2015 Notary Rotary, Inc. PO Box 41400, Des Moines, IA 50311-0507. All Rights Reserved. Item Number 101772. Please contact your Authorized Reseller to purchase copies of this form.

CALIFORNIA CERTIFICATE OF ACKNOWLEDGMENT

A notary public or other officer completing this certificate verifies only the identity of the individual who signed the document to which this certificate is attached, and not the truthfulness, accuracy, or validity of that document.

State of California)

County of NEVADA)

On DEC. 30, 2015 before me, COLLETTE SWARINGEN,
(here insert name and title of the officer)

personally appeared ROBERT UPTON

,

who proved to me on the basis of satisfactory evidence to be the person(s) whose name(s) is/~~are~~ subscribed to the within instrument and acknowledged to me that he/~~she~~/~~they~~ executed the same in his/~~her~~/~~their~~ authorized capacity(~~ies~~), and that by his/~~her~~/~~their~~ signature(s) on the instrument the person(s), or the entity upon behalf of which the person(s) acted, executed the instrument.

I certify under PENALTY OF PERJURY under the laws of the State of California that the foregoing paragraph is true and correct.

COLLETTE SWARINGEN
COMM. #2134023
Notary Public - California
Nevada County
My Comm. Expires Nov. 15, 201

NRO1

WITNESS my hand and official seal.

Signature Collette Swaringen (Seal)

Optional Information

Although the information in this section is not required by law, it could prevent fraudulent removal and reattachment of this acknowledgment to an unauthorized document and may prove useful to persons relying on the attached document.

Description of Attached Document

The preceding Certificate of Acknowledgment is attached to a document titled/for the purpose of DEVELOPMENT AGREEMENT

,

containing 30 pages, and dated AUGUST, 2015.

The signer(s) capacity or authority is/are as:

- ☐ Individual(s)
- ☐ Attorney-in-Fact
- ☐ Corporate Officer(s) _____ Title(s)
- ☐ Guardian/Conservator
- ☐ Partner - Limited/General
- ☒ Trustee(s)
- ☐ Other: _____

representing: NEVADA CITY, CA
Name(s) of Person(s) or Entity(ies) Signer is Representing

Additional Information

Method of Signer Identification

Proved to me on the basis of satisfactory evidence:
○ form(s) of identification ○ credible witness(es)

Notarial event is detailed in notary journal on:
Page # _____ Entry # _____

Notary contact: _____

Other

☐ Additional Signer(s) ☐ Signer(s) Thumbprint(s)

☐ _____

© Copyright 2007-2015 Notary Rotary, Inc. PO Box 41400, Des Moines, IA 50311-0507. All Rights Reserved. Item Number 101772. Please contact your Authorized Reseller to purchase copies of this form.

CALIFORNIA CERTIFICATE OF ACKNOWLEDGMENT

A notary public or other officer completing this certificate verifies only the identity of the individual who signed the document to which this certificate is attached, and not the truthfulness, accuracy, or validity of that document.

State of California)

County of NEVADA)

On Jan. 7, 2016 before me, Collette Swaringen,
(here insert name and title of the officer)

personally appeared Jennifer M. Ray,

who proved to me on the basis of satisfactory evidence to be the person~~(s)~~ whose name~~(s)~~ is/~~are~~ subscribed to the within instrument and acknowledged to me that ~~he~~/she/~~they~~ executed the same in ~~his~~/her/~~their~~ authorized capacity~~(ies)~~, and that by ~~his~~/her/~~their~~ signature~~(s)~~ on the instrument the person~~(s)~~, or the entity upon behalf of which the person(s) acted, executed the instrument.

I certify under PENALTY OF PERJURY under the laws of the State of California that the foregoing paragraph is true and correct.

COLLETTE SWARINGEN
COMM. #2134023
Notary Public - California
Nevada County
My Comm. Expires Nov. 15, 2019

NRO1 NRO1

WITNESS my hand and official seal.

Signature Collette Swaringen

(Seal)

Optional Information

Although the information in this section is not required by law, it could prevent fraudulent removal and reattachment of this acknowledgment to an unauthorized document and may prove useful to persons relying on the attached document.

Description of Attached Document

The preceding Certificate of Acknowledgment is attached to a document titled/for the purpose of Development Agreemen,

containing 31 pages, and dated August, 2015.

The signer(s) capacity or authority is/are as:

- ☐ Individual(s)
- ☐ Attorney-in-Fact
- ☐ Corporate Officer(s) _____ Title(s)
- ☐ Guardian/Conservator
- ☐ Partner - Limited/General
- ☐ Trustee(s)
- ☑ Other: MAYOR

representing: NEVADA City
Name(s) of Person(s) or Entity(ies) Signer is Representing

Additional Information

Method of Signer Identification

Proved to me on the basis of satisfactory evidence:
○ form(s) of identification ○ credible witness(es)

Notarial event is detailed in notary journal on:
Page # _____ Entry # _____

Notary contact: _____

Other

☐ Additional Signer(s) ☐ Signer(s) Thumbprint(s)

☐ _____

© Copyright 2007-2015 Notary Rotary, Inc. PO Box 41400, Des Moines, IA 50311-0507. All Rights Reserved. Item Number 101772. Please contact your Authorized Reseller to purchase copies of this form.

RESOLUTION NO. 2018-XX

A RESOLUTION OF THE CITY COUNCIL OF THE CITY OF NEVADA CITY TO APPROVE FOR FILING THE FINAL MAP FOR NEVADA CITY TECH. CENTER LLC – PHASE 3 AND AUTHORIZE MAYOR TO SIGN

WHEREAS, the City Planning Commission and the City Council previously approved the Final Environmental Impact Report prepared for the Project on August 13, 1984; and

WHEREAS, the City, in accordance with applicable local and state laws, ordinances, and regulations, previously approved General Plan Amendment No. 84-18, Zoning Amendment No. 84-9, Site Plan No. 84-17, a Development Agreement By and Between the City of Nevada City and Grass Valley Group Relative to Grass Valley Group Site Development, dated November 12, 1985, and as approved for subsequent amendments and extensions; and

WHEREAS, at the meeting on February 14, 2006, City Council conditionally approved the Tentative Map for subdivision into two or more legal parcels for purposes of sale, lease, or finance of approximately 400,000 square feet of light industrial space, and 20,000 square feet of related facilities; and

WHEREAS, the Final Map for Nevada City Tech. Center LLC – Phase 3 was submitted to the City Surveyor in accordance with the terms and provisions of the Development Agreement and Tentative Map and is therefore considered timely filed pursuant to the Subdivision Map Act Section 66452.6(d); and

WHEREAS, the Mitigation Measures and Conditions of Approval for the Final Map have been satisfied; and

WHEREAS, the Final Map has been presented to Council and reviewed by City Staff and City Council, and found to be consistent with the approved tentative map.

NOW, THEREFORE, BE IT RESOLVED by the City Council of the City of Nevada City to approve for filing the Final Map for Nevada City Tech. Center LLC – Phase 3 and authorize the Mayor to sign the map.

PASSED AND ADOPTED at the regular meeting of the City Council of the City of Nevada City on the 11th day of April, 2018, by the following vote:

AYES:

NOES:

ABSENT:

ABSTAIN:

_____

Duane Strawser, Mayor

ATTEST:

_____

Niel Locke, City Clerk

REPORT TO CITY COUNCIL

City of Nevada City
317 Broad Street
Nevada City CA 95959
www.nevadacityca.gov

APRIL 11, 2018

TITLE: LAFCo Meeting Update

RECOMMENDATION: Receive and file.

CONTACT: Amy Wolfson, City Planner

BACKGROUND / DISCUSSION: At the February 28, 2018 City Council meeting, staff updated Council on LAFCo staff's effort to procure a consultant to prepare an environmental document pursuant to the California Environmental Quality Act (CEQA) necessary for the Nevada City SOI Update. Staff also updated you on the collaborative effort by LAFCo staff and Nevada City staff in determining alternative boundaries to be considered in the CEQA document:

- LAFCo staff's original recommendation entailing a significant reduction in the city's SOI boundary (nearly 50% reduction – removal of 1,425 acres)
- Nevada City staff's recommendation which retains the existing SOI boundaries (0% reduction – retains all 2,907 acres)
- An alternative compromise that considers aspects of both LAFCo staff's and Nevada City staff's recommendations (estimated 22% reduction – removes approximately 650 acres)

The compromise alternative was the result of productive discussions between City and LAFCo staff in defining the scope of environmental review for the SOI update. The compromise boundary achieves many of the City's objectives in retaining important areas in the sphere. In addition, it will provide environmental analysis for desired annexations, at a nominal cost to the City.

LAFCO MEETING: At the March 22 LAFCo meeting, LAFCo Executive Officer, SR Jones updated the commission on the "Request for Proposals (RFP)" process. Proposals had come in higher than expected so Jones is looking at a revised project scope and plans to distribute a revised RFP. The Commission directed Jones to work with the MSR/Sphere Ad Hoc Committee to facilitate selection of a consultant to prepare an Environmental Impact Report (EIR), which will include analysis of the some of the properties slated for near-term annexations.

ENVIRONMENTAL CONSIDERATIONS: Not applicable

FISCAL IMPACT: Not applicable

ATTACHMENTS:

- ✓ SOI Boundary Map Showing Alternative Boundaries
- ✓ March 22, 2018 LAFCo Staff Report

Map Showing Boundary Alternatives To Be Considered in SOI Update CEQA Document

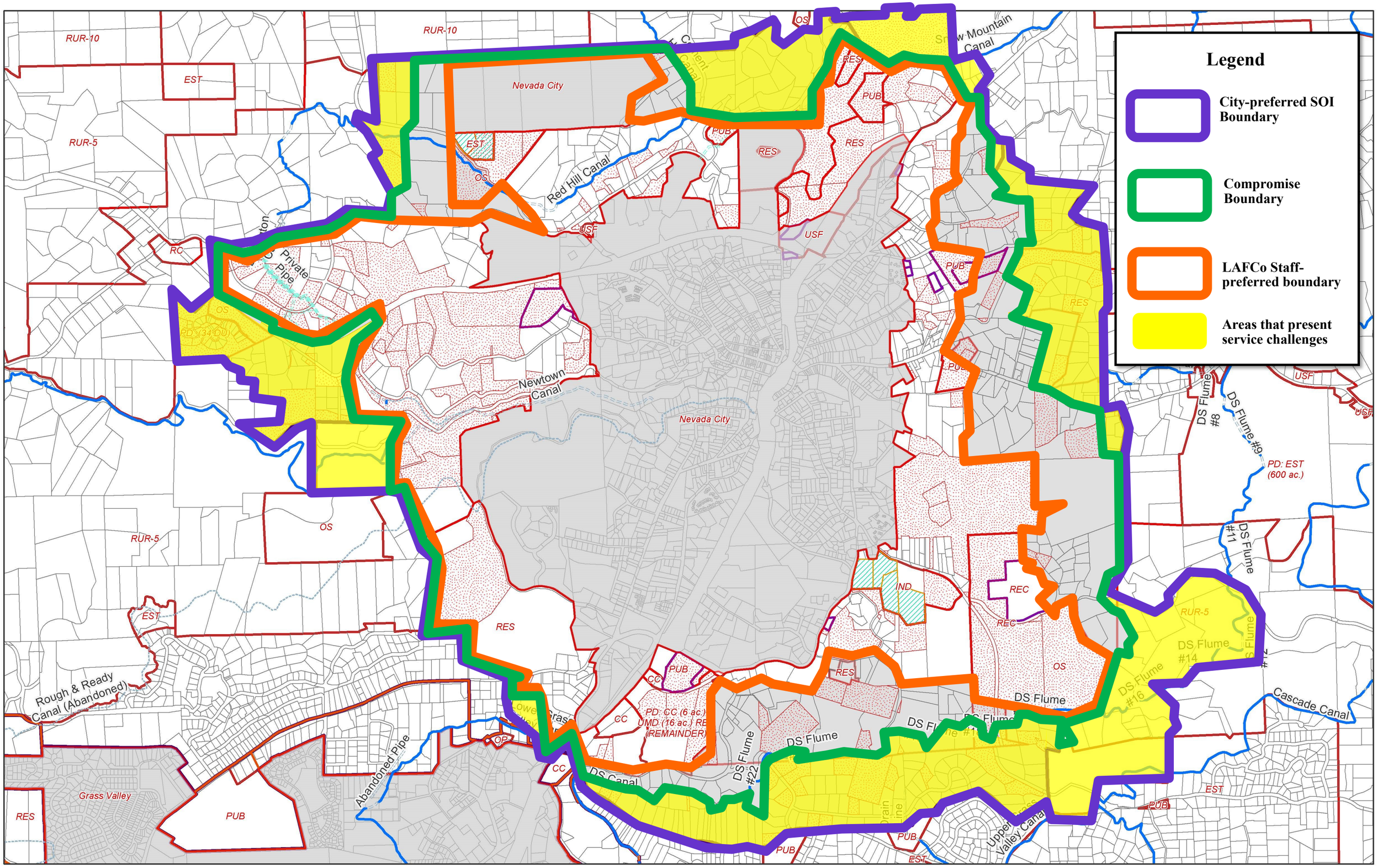

Nevada Local Agency Formation Commission
950 Maidu Avenue
Nevada City, CA 95959
Phone 530 265-7180 or 888-846-7180

Date: March 22, 2018

To: LAFCo Commissioners

From: SR Jones, Executive Officer
P. Scott Browne, LAFCo Counsel

Subject: Nevada City Sphere Update – Status and Request for Direction

Summary

Nevada LAFCo staff and Nevada City staff have been engaged in discussions regarding LAFCo's update of the City's sphere of influence plan. These discussions have been productive, and LAFCo staff is requesting the Commission provide direction for moving forward with the sphere update project.

One of the critical steps in the process involves preparation of an environmental review for the project. As discussed below, LAFCo staff has initiated a search for a qualified consultant to prepare such a review and will work closely with the Commission's Ad Hoc Committee for Spheres and MSRs to provide a recommendation to the Commission at a subsequent meeting.

Progress since the September Commission Meeting

At the Commission's meeting on September 21, 2017, City staff presented a 20-year plan for the phased annexation of all lands within its sphere of influence. The annexation plan was prepared by the City in response to the Commission's request (of March 2017) for a plan that would provide specific information relative to the cost and feasibility of annexing and extending city services to all areas in the sphere.

Following the City's presentation at the September meeting, LAFCo staff prepared an analysis of the annexation plan which was provided to City staff and the Commission. LAFCo and City staff met on several occasions to discuss the analysis. In addition, productive discussions that have included LAFCo Counsel and the City Attorney regarding the environmental analysis have taken place. Operating on the assumption that the environmental analysis for the sphere update would take the form of an environmental impact report (EIR), the group has identified at least three project alternatives constituting differing sphere boundary options. These three alternatives include:

- The City's preferred sphere boundary (including approximately 2900 acres in 950 parcels) which is the same as the current sphere boundary, last updated by LAFCo in 2008)
- The LAFCo staff-recommended sphere boundary (which would omit approximately 1,250 parcels comprised of 516 parcels from the sphere and designate that area as an "Area of Interest")
- A third "consensus" sphere boundary, which would constitute the preferred alternative. Note that the consensus alternative also includes initiation of several planned annexations, and is described in more detail below. This would be designated the "preferred project alternative" for the purposes of the EIR.

At its February 28, 2018, meeting, the City Council was updated on the progress on the sphere update and has adopted a *Resolution of Intent* authorizing City Staff to proceed to develop pre-zoning recommendations for the properties included in four annexation areas, as discussed in more detail below.

Consensus Boundary Alternative

The consensus boundary (as depicted on *Attachment 1*) would retain most of the lands within the 2008 sphere boundary, with the exception of several areas that are remote from the City's public sewer system lines that might present financial challenges for connection. This alternative also identifies four areas that

would be initiated for annexation by the City. The Environmental Impact Report would be designed to support these annexations by providing environmental analysis at a programmatic level. Note that the City may be able to proceed with one or more of the projects on a categorical exemption basis; these could be initiated prior to completion of the EIR.

The four areas include:

- Area 1 (five parcels): Includes the California Department of Transportation facility (currently connected to City sewer), the Prospector's Nursery, and the Little Friends Child Development Center, along Gold Flat Road.
- Area 2 (three parcels): Includes County Juvenile Hall (currently connected to City sewer), and two adjacent and vacant County-owned properties, located south of Hwy 49.
- Area 3 (18 parcels): Includes the former County Health Education and Welfare (H.E.W.) Building (now privately owned and currently connected to City sewer) and the Nevada Cemetery District offices along Willow Valley Road. There are 14 intervening parcels that are privately owned, three of which are connected to the City sewer system, and two of which are undeveloped.
- Area 4 (22 parcels): Includes four cemetery facilities that are either privately or publicly managed along Boulder Street and Park Avenue Extension and 18 intervening privately owned properties. The City Engineer has indicated that this is an area of planned walkable improvements.

Inclusion of these areas in the environmental analysis would be a benefit to the City in that it would reduce the procedural burden for pre-zoning and initiation of these annexations. Consequently, the City Council has agreed to provide a financial contribution of $1000 toward LAFCo's costs for preparation of the EIR.

Environmental Analysis for Sphere Updates

Relative to the appropriate scope of the environmental analysis for the sphere update, it should be noted that the Commission adopted the original sphere for the City in 1983, after finding that there was no possibility of a significant effect on the environment. LAFCo files indicate the City prepared and presented the sphere plan to LAFCo prior to the completion of its General Plan. Consequently, the abbreviated environmental review that was prepared for the General Plan would not have been applicable to the sphere adoption. While this approach may have been acceptable in 1983, in 2012 LAFCo Counsel prepared an opinion (see *Attachment 2*) that recognizes the update of a sphere of influence as a "project" with the potential to result in environmental impacts.

In 2008, LAFCo prepared and approved an update of the City's sphere of influence (which resulted in no changes to the sphere boundary) following preparation of an initial study and negative declaration.

Counsel's 2012 opinion indicates a different approach is required relative to the scope of the environmental review. The basic standard for evaluation of projects under CEQA requires that unless the Lead Agency can demonstrate that there is no potential for the project to have a significant effect on the environment, environmental review is required. If that review determines that a "fair argument" can be made that there is a potential for significant impact, then an EIR is necessary. Further, when the Lead Agency cannot show that there is no potential for a project to have a significant impact on the environment, proceeding with a Negative Declaration (of environmental impact) carries substantial legal risk.

In the case of a city sphere update, when the sphere includes lands that could receive growth-inducing services such as public sewer, the indirect secondary impacts of that development must be evaluated in the CEQA analysis.

Further, Counsel's opinion indicates that the "baseline" for evaluation of impacts is the present physical conditions as they exist at the time the project is evaluated. Thus, even if an undeveloped area has been

included in the agency's sphere for many years, if the General Plan would allow substantial development and the service provided by the agency is necessary for that development, the environmental analysis must consider the foreseeable impacts of that development on the environment.

Process

The next steps in the sphere update process include the following:

1. Completion of the sphere of influence plan document. This would entail updating the document that has been prepared by LAFCo staff with information from the City's new annexation plan, as well as more current information relative to City finances and services.
2. Compliance with the California Environmental Quality Act, including preparation of the environmental document.
3. Public hearing to approve the sphere plan and the environmental document.

Discussion of Recommended Commission Direction to Staff

Staff and Counsel recommend the Commission direct staff to work with the Commission's MSR/Sphere Ad Hoc Committee to facilitate the selection of a qualified consultant for the preparation of an environmental impact report that would include analysis of various project alternatives analogous to the three listed alternative sphere boundaries, and inclusion of analysis to support the City's pre-zoning and initiation of annexation proceedings for the above discussed four potential annexation areas.

cc: Catrina Olson, Interim City Manager (via e-mail)
Amy Wolfson, City Planner (via e-mail)
Hal DeGraw, City Attorney (via e-mail)

Attachments:

1 "Consensus" Sphere Boundary Alternative (map)

2 LAFCo Counsel's 2012 CEQA Opinion

Attachment 1

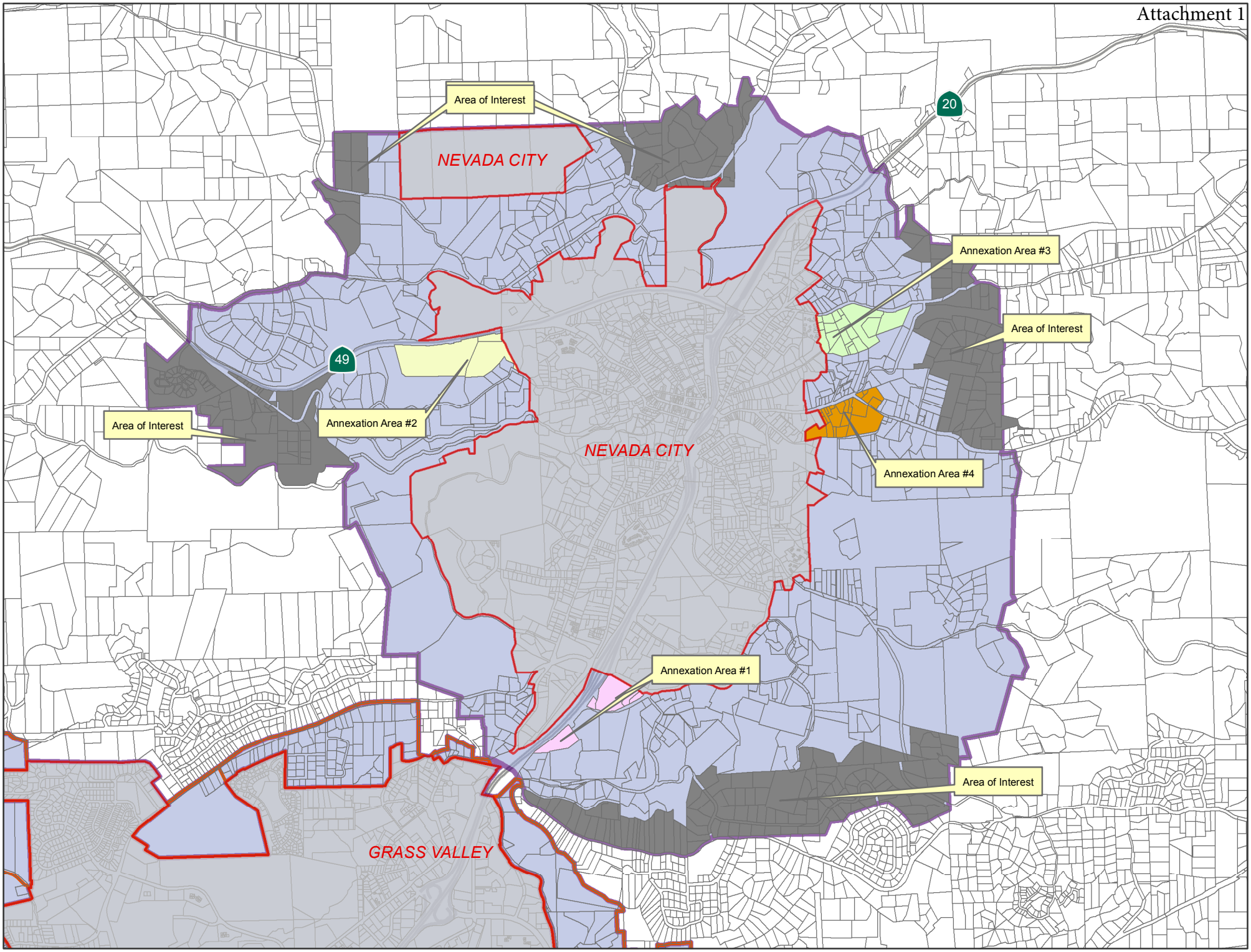

P. SCOTT BROWNE
ATTORNEY AT LAW
The Old Post Office
131 South Auburn Street
Grass Valley, California 95945-6501
scott@scottbrowne.com
(530) 272-4250
Fax (530) 272-1684

March 13, 2018

MEMORANDUM OPINION

TO: LAFCo Executive Officers and Commissions

FROM: P. Scott Browne, LAFCo Counsel

RE: **Sphere of Influence Updates: Relation to Sphere Amendments and CEQA Review Requirements**

I have been requested by a number of the LAFCo's I represent to provide guidance on to certain legal issues related to Sphere of Influence (SOI) Updates. First you have requested that I discuss the requirements of CEQA as they apply to SOI updates. Second, I have been asked what is the legal consequence of failure to update spheres?

Summary of Opinion

As discussed below, my conclusion is that while there is little direct law on spheres, they are likely to be treated similar to general plans. They are usually projects subject to CEQA, and while their impacts, like general plans, are indirect, they can be significant in their facilitation of growth and its environmental consequences. The environmental analysis of a sphere must use as its baseline the existing condition "on the ground", not what the prior sphere or applicable general plan permits. It is permissible and appropriate to rely upon county and city general plan EIR's for analysis of growth effects if the EIR's are not out of date and reflect current requirements. Cities may even "apply" for a sphere update and expressly assume lead agency status as part of a city general plan update. In that special situation LAFCo may act as a responsible agency and use the city's environmental document. However, where LAFCo must act as a lead agency its reliance on a city or county general plan EIR may not permit LAFCo to avoid doing its own EIR. If the relied-upon EIR made findings of significant, unavoidable environmental impacts, (as most do) the LAFCo must follow the relied-upon EIR in making overriding findings for those impacts. This can only be done through an EIR or supplemental EIR. Also the environmental analysis for a sphere must include consideration of Green House

Gas Emissions.

Failure to timely update spheres is also likely to be treated similarly to the failure to timely update a general plan. The courts are likely to invalidate any substantial change of organization or sphere amendment based on the outdated sphere, just as the courts have invalidated subdivision approvals and other planning entitlements that are based on an inadequate general plan.

I. CEQA Requirements With Respect to Sphere Updates

I have been frequently asked to advise on the requirements under the California Environmental Quality Act (CEQA) that are applicable to sphere updates. Sphere updates are one of the few projects where LAFCo usually acts as the lead agency under CEQA. LAFCo staff is often unfamiliar with the CEQA requirements for a lead agency applicable to such projects and misconceptions and mistaken application of the law are common. This is reflected in the apparent tremendous diversity in approach amongst the LAFCo's in how they apply the requirements of CEQA to sphere updates—from treating all updates as exempt altogether from CEQA to doing negative declarations to full environmental impact reports.

While Of course, the answer to the question is the usual lawyer response—it depends on the circumstance. The sphere update for a cemetery district that proposes no expansion beyond the existing borders probably qualifies for exemption from CEQA, while the sphere update for a city that includes substantial undeveloped farmland would normally require a full EIR or Supplemental EIR.

CEQA requires the following fundamental analysis for all governmental actions: First, is the action a "project" subject to CEQA at all. Second, if it is a project, what is it's potential to cause adverse physical change in the environment either directly or indirectly. Third, are those potential physical changes "significant". In making these determinations, it must be kept in mind, as discussed below, a) that one must consider indirect or secondary impacts, b) that the baseline for comparison is the present conditions on the ground, c) that reliance on a County or City General Plan may not avoid an EIR and d) that the environmental analysis must include analysis of Green House Gas emissions.

A. Are Sphere Updates "Projects" Subject to CEQA?

The first issue is whether a sphere update is a "project" subject to CEQA at all. The CEQA Guidelines define a project in pertinent part as:

§15378. Project.

Opinion Re Sphere Updates: CEQA and Statutory Timing Requirements

> *(a) ``Project'' means the whole of an action, which has a potential for resulting in either a direct physical change in the environment, or a reasonably foreseeable indirect physical change in the environment, and that is any of the following:*
>
> *(1) An activity directly undertaken by any public agency including but not limited to public works construction and related activities clearing or grading of land, improvements to existing public structures, enactment and amendment of zoning ordinances, and the adoption and amendment of local General Plans or elements thereof pursuant to Government Code Sections 65100-65700[Deering's].*

Thus CEQA applies to any governmental "action". This is an extremely broad term which certainly would encompass LAFCo action to adopt agency spheres and updates. However to be a project, the "action" must also have the potential to result in environmental impacts.

The California Supreme Court in *Bozung v. LAFCo* (1975) 13 Cal.3d 263, 268 [118 Cal.Rptr. 249, 529 P.2d 1017] very early on in the development of CEQA law had no problem finding that an annexation was a project subject to CEQA. I will discuss the case in detail because it's holdings are relevant to many of the issues involved in environmental review of sphere decisions.

In the *Bozung* case, the City of Camarillo had obtained approval from Ventura LAFCo first for adding the property to its sphere and then for the annexation of 677 acres to the city without any environmental review. Indeed the Court noted that "the annexation proceeded as if CEQA did not exist". (*id* at pg 273) The annexation decision was challenged on the grounds that the LAFCo was required to do environmental review for the annexation.

The LAFCo defended the decision on the grounds that the annexation was not a "project" subject to CEQA. It argued that 1) LAFCo was not a "local agency" subject to CEQA, and 2) annexations were "more like a feasibility or planning study" The Court immediately dismissed the argument that LAFCo was not a local agency within the purview of CEQA. It then rejected the idea that annexations were merely planning studies. The Court pointed out that it was well established that general plans are projects and since LAFCo approval of an annexation is an irrevocable step it is certainly a project subject to CEQA. (*Bozung*, supra, 13 Cal.3d 263 at 278)

The Court then proceeded to analyze whether there was any potential for the annexation approval to result in significant environmental impacts. LAFCo argued that the annexation approval itself was "another piece of paper" with no direct impact on the environment. The Court cited to the landmark case of *Friends of Mammoth v. Board of Supervisors*, (1972) 8 Cal.3d 247, 259 [104 Cal.Rptr. 761, 502 P.2d 1049], that "activities culminating in physical changes to the environment" are subject to CEQA even if indirect. (*id* at 279) In this case the intent to annex for development was clear. The Court dryly commented that "This is not the case of a rancher who feels that his cattle would chew their cuds more contentedly in an incorporated pasture."

Opinion Re Sphere Updates: CEQA and Statutory Timing Requirements

LAFCo then argued that even if it is a project under CEQA with potential for environmental impacts, an EIR was not required at this stage. They argued that an EIR at the annexation stage would be premature and wasteful since further environmental review would occur within the City of Camarillo for the city entitlements to proceed with development. The California Supreme Court responded

"*It is claimed that the preparation of an EIR for LAFCO would be wasteful and premature since Camarillo will have to prepare another EIR in order to rezone the annexed property. Conceding for the sake of argument only that this is so, it misses the entire thrust of CEQA which requires governmental agencies "at all levels" to consider environmental factors*. ((*Bozung*, supra, 13 Cal.3d 263 at 281)

The Court went on to point out that CEQA Guidelines Section 15065 require the agency which acts first on project be the lead agency. Also the Court noted that as a regional agency, LAFCo was the better qualified and more objective agency to address the regional environmental issues related to the annexation than was the City. (*id* at 283) Finally the Court said that to allow the LAFCo decision to proceed without environmental review would allow environmental considerations "to be submerged by chopping a large project into many little ones—each with a minimal potential impact on the environment." (*id* at 283-284)

The Bozung case was followed by three other LAFCo cases relevant here, *Simi Valley Recreation & Park Dist. v. Local Agency Formation Com.* (1975) 51 Cal.App.3d 648, 668 669 [124 Cal.Rptr. 635].), *City of Livermore v. Local Agency Formation Com*. (1986) 184 Cal.App.3d 531, 543 [230 Cal.Rptr. 867] and *City of Agoura Hills v. Local Agency Formation Com.* (1988) 198 Cal.App.3d 480, 485.

In the *Simi Valley* case, the LAFCo and the County Board of Supervisors had approved the detachment of 10,000 acres from the Simi Valley Recreation and Park District over its objections. The LAFCo made its decision without any CEQA compliance. The District challenged the failure of LAFCo to do any environmental review. The Court of Appeal upheld the decision, distinguishing the decision in *Bozung* as follows:

> *The decision, therefore, does not make every LAFCO approval a project subject to CEQA; nor does it make every LAFCO approval of local agency boundary changes, the timing of which may coincide with intended development, such a project. It dealt only with the situation where LAFCO approval was a necessary step in the development and in effect constituted an entitlement for use for such development. (Simi Valley, supra,* 51 Cal.App.3d 648 at 665*)*

The Simi Valley court cited to the fact that unlike in the *Bozung* case, no

development was dependent on the detachment decision. The land was within the same planning jurisdiction—the County both before and after the detachment and the District had no authority over the use of the land that was changed by the detachment. Therefore this was not the type of LAFCo action that was a project subject to CEQA. (*id* at 666).

However a different conclusion was reached in the case of *City of Livermore v. Local Agency Formation Com., supra*, (1986) 184 Cal.App.3d 531, in the first case to directly consider a LAFCo sphere action. There the Alameda LAFCo approved revisions to its Sphere Policy Guidelines that eliminated a requirement that urban development areas belonged in cities and facilitated urban development outside of cities. The revisions were approved with a negative declaration. (*id* 535-536). The City of Livermore challenged the negative declaration, arguing that the revisions to the Sphere policies had the potential for significant effects and a full EIR was required.

The Court of Appeal first addressed the issue whether the Sphere Policies were even a project subject to CEQA. LAFCo argued that the revisions involved no tangible physical activity and their effect was too remote to qualify the action as a project. The Court disagreed. It held that CEQA and the State CEQA Guidelines focus on the ultimate impact of the project, not on whether a project is tangible or intangible. Even "government paper shuffling" is a project if it results in impacts on the environment. (*id* at 539)

Then the Court addressed the argument that impact was too remote and indirect. It said:

> *Just as the amendment of a general plan will influence the future growth and development of cities, so too will the sphere of influence guideline revisions have such an effect. These guideline revisions, which may promote urbanization in the county rather than in existing cities, may have an even greater impact than the amendment of one general plan. The potential impact of the guideline revisions necessitates that the revisions be considered a "project" under CEQA.*

The *Livermore* Court distinguished the decision in *Simi Valley*, arguing that the decision in the *Simi Valley* case was based on the particular LAFCo action involved there. "The LAFCO action here was not one plan, nor a slight reorganization in administration, but a major policy shift that would affect land use throughout the entire region." (*City of Livermore v. Local Agency Formation Com., supra*, (1986) 184 Cal.App.3d 531 at 539-540).

The case that is most often cited to support an argument that sphere decisions are not projects subject to CEQA is the case of *City of Agoura Hills v. Local Agency Formation Com.* (1988) 198 Cal.App.3d 480, 485. In that case the City of Agoura Hills, unhappy with Los Angeles LAFCo's determination of a nearly co-terminous sphere with the existing city boundaries, sought to have the court reverse the decision. Among their arguments to the Court

against LAFCo's decision, the City argued the decision should be reversed because LAFCo failed to do any environmental review of the sphere decision under CEQA.

The Court of Appeal upheld the LAFCo's determination that the sphere decision was not subject to CEQA. The Court, citing *Simi Valley*, said "Not all of LAFCO's decisions, particularly sphere of influence determinations, require an EIR or negative declaration" (*id*, at pg 494) The *Agoura Hills* Court goes on to state:

> "*The fact that spheres of influence are recognized as important factors in annexations does not compel the conclusion that they are per se "projects" subject to CEQA. There is no support for this contention in Bozung or any other case cited by the parties."* (*id* at pg 495)

The Court determined that the sphere decision here "could not have a 'significant effect on the environment'…" and therefore was not a project subject to CEQA. (*id*). The Court also addressed a challenge under the Fair Political Practices Act and concluded that a sphere decision is not an "entitlement for use" within the meaning of GC Section 84308 of the Act.

While the *Agoura Hills* case has never been explicitly overruled[1], it must be read as limited to its facts and time. First, it came down long before CKH was adopted and strengthened the role of spheres in the LAFCo process. Second it did not have the benefit of subsequent CEQA cases on baselines or indirect effects of projects. Most importantly, the court only ruled that "CEQA provisions do not apply to LAFCo's sphere decision <u>in this case</u>". Looking at the facts of that case, LAFCo had determined essentially a coterminous sphere for the city. This is the equivalent of no sphere or "no project". CEQA clearly does not apply to such non-projects. The same decision would be reached today given those very limited facts. The Court's general statements about spheres not being entitlements for use was not addressing the CEQA issue but a Fair Political Practices Act issue.

I have been able to find no other cases that directly address the application of CEQA to LAFCo sphere decisions. There is some additional authority with respect to sphere "amendments". The Attorney General in 1980 was asked to render an opinion whether a sphere amendment was a project subject to CEQA. The Attorney General concluded that sphere amendments were subject to CEQA when "such action could possibly have a significant effect on the environment." (63 Ops. Cal. Atty. Gen. 758) This opinion probably triggered the one specific reference to CEQA compliance in the Cortese Knox Hertzberg Act in connection with sphere decisions. Section 56428(b) specifically requires compliance with CEQA requirements as part of

[1] The Court of Appeal in an unpublished case *City of Santa Clarita v. Las Lomas Land Co., LLC* [Not Reported in Cal.Rptr.3d], 2008 WL 2105534 Cal.App. 2 Dist.,2008 limited the *Agoura Hills* holding to its facts, in ruling that a sphere amendment for the City of Santa Clarita was subject to CEQA. The decision is unpublished and therefore may not be cited as legal authority.

the process for consideration of a sphere amendment. While neither of these authorities specifically address sphere "updates" the similarity between sphere amendments and sphere updates gives them considerable relevance to the treatment of sphere updates under CEQA.

What can be concluded from this review of authority is that sphere updates are "projects" subject to CEQA when the update has the potential to result in environmental impacts. Only when the sphere update has no potential for environmental impacts, such a cemetery district sphere update or proposal for a co-terminous sphere, can an exemption from CEQA safely be adopted.

B. Evaluation of Sphere Updates Under CEQA

The rules that apply to evaluation of all projects under CEQA apply to evaluating sphere updates. However the nature of sphere updates as broad planning documents as opposed to specific concrete projects frequently poses special problems in applying the general rules. Lack of awareness of these special problems result in misconceptions about what is required and are major contributors to the variation in application of CEQA to sphere updates.

I will first begin with the basic requirements for evaluation of projects under CEQA and then discuss the special problems that commonly arise in evaluating sphere updates.

1. The Basic Standard

CEQA requires that projects be evaluated to determine whether they may have a significant effect on the environment. "Significant effect on the environment is defined in Guidelines §15382 as "a substantial, or potentially substantial, adverse change in any of the physical conditions within the area affected by the project including land, air, water, minerals, flora, fauna, ambient noise, and objects of historic or aesthetic significance."

§15064 sets forth how an agency should go about determining whether a project may cause a significant effect on the environment. Subdivision (d) states:

> *(d) In evaluating the significance of the environmental effect of a project, the lead agency shall consider direct physical changes in the environment which may be caused by the project and reasonably foreseeable indirect physical changes in the environment which may be caused by the project.*
>
> *(1) A direct physical change in the environment is a physical change in the environment which is caused by and immediately related to the project. Examples of direct physical changes in the environment are the dust, noise, and traffic of heavy equipment that would result from construction of a sewage treatment plant and possible odors from operation of the plant.*

> *(2) An indirect physical change in the environment is a physical change in the environment which is not immediately related to the project, but which is caused indirectly by the project. If a direct physical change in the environment in turn causes another change in the environment, then the other change is an indirect physical change in the environment. For example, the construction of a new sewage treatment plant may facilitate population growth in the service area due to the increase in sewage treatment capacity and may lead to an increase in air pollution.*
>
> *(3) An indirect physical change is to be considered only if that change is a reasonably foreseeable impact which may be caused by the project. A change which is speculative or unlikely to occur is not reasonably foreseeable.*

Subdivision (f)(1) of §15064 sets forth when an environmental impact report is to be prepared for a project:

> *(1) If the lead agency determines there is substantial evidence in the record that the project may have a significant effect on the environment, the lead agency shall prepare an EIR (Friends of B Street v. City of Hayward (1980) 106 Cal. App. 3d 988). Said another way, if a lead agency is presented with a fair argument that a project may have a significant effect on the environment, the lead agency shall prepare an EIR even though it may also be presented with other substantial evidence that the project will not have a significant effect (No Oil, Inc. v. City of Los Angeles (1974) 13 Cal. 3d 68).[emphasis added]*

CEQA, as interpreted by the Courts and incorporated in the Guidelines, sets "a low threshold" for when an EIR is required. This is because the Legislature established that preparation of an EIR is "the heart of CEQA" --the principal method by which environmental data are brought to the attention of the agency and the public." (*No Oil, Inc. v. City of Los Angeles* (1974) 13 Cal.3d 68, at 83 [529 P.2d 66; 118 Cal. Rptr. 34]. Under this low threshold, the "fair argument" standard essentially places the burden on the agency to show that there is no potential for a project to have a significant effect on the environment. Consequently, proceeding with a negative declaration carries substantial legal risk that should be carefully evaluated with legal counsel before consideration.

2. Evaluation Must Include Indirect or Secondary Impacts of the Sphere Decision

A common fallacy in applying CEQA to sphere determinations is to focus on direct physical impacts and ignore or minimize the indirect impacts of the sphere decision. The argument is that a sphere is just a flexible planning tool. Drawing lines on a map has no direct impacts and indirect impacts are so speculative and remote that it is impossible to evaluate them at this stage. Substantive evaluation should wait for the actual annexation.

As discussed above, this same argument was of course made and rejected with respect to annexations in the *Bozung* case. It was also made in the *Livermore* case with respect to sphere policies

and rejected there. Sphere plans are no more speculative and remote in their impacts than general plans. There is no question that general plans require substantive CEQA review of their potential indirect impacts—usually in an EIR. Consequently, it is legally untenable to continue to assert that sphere plans are categorically subject to a lesser standard of review.

Sphere plans are plans for the probable physical boundaries and service area of an agency. (GC 56076) They establish where services will over time be provided and where they will not. Environmental review of a proposed sphere must evaluate the reasonably forseeable impacts of providing those services to the areas outside of the existing agency boundaries. If the services provided by the agency would facilitate development, the indirect secondary impacts of that development must be evaluated as a part of the CEQA document for the agency sphere, just as is done with the forseeable development impacts of a general plan.

3. The Baseline for Evaluation of Impacts is Present Conditions "on the Ground"

A second common misconception in applying CEQA to adoption of broad planning policies such as spheres of influence is with respect to the baseline for evaluation. It is often asserted that, for example, a LAFCo need only analyze the differences between the sphere proposed in the update with the existing adopted sphere or applicable general plan. If there is not much difference, then the LAFCo may safely conclude that there is no significant impact and proceed with a negative declaration or even an exemption. While this carries a certain surface plausibility, it is not the law.

Since the determination of significant effect looks to *change* in the physical environment, CEQA requires analysis of the differences in the environment after the project occurs with conditions before. But what "before" conditions?

Section 15125, subdivision (a) of the CEQA Guidelines spells that out. It provides: "An EIR must include a description of the physical environmental conditions in the vicinity of the project, <u>as they exist at the time</u> the notice of preparation is published, or if no notice of preparation is published, at the time environmental analysis is commenced, from both a local and regional perspective. This environmental setting will normally constitute the baseline physical conditions by which a lead agency determines whether an impact is significant." (Cal. Code Regs., tit. 14, § 15125, subd. (a), italics added.)

The seminal case with regard to the baseline for planning documents is the case of *Environmental Planning & Information Council (EPIC) v. County of El Dorado*, (1982) 131 Cal.App.3d 350, 354, 357–358. In that case, EPIC challenged the EIR for an amendment to the County general plan. It argued that the EIR which solely focused on differences between the new General Plan and the existing General Plan violated CEQA. The Court of Appeal agreed. It held:

> *"The dispositive issue on this appeal is whether the requirements of CEQA are satisfied when the EIRs prepared for use in considering amendments to the county general plan compare the environmental impacts of the proposed amendments to the existing plan rather than to the existing environment. (1a)We hold that the EIRs must report on the impact of the proposed plans on the existing environment. Since we find that the EIRs in this case are inadequate for this*

purpose we reverse the judgment," (*id* at p. 352)

The Court went on to say that an approach using hypothetical allowable conditions as the baseline results in "illusory" comparisons that "can only mislead the public as to the reality of the impacts and subvert full consideration of the actual environmental impacts," (*id* at 358)

The California Supreme Court in the recent case of *Communities for a Better Environment v. South Coast Air Quality Management Dist.* (2010) 48 Cal.4th 310, 319, 106 Cal.Rptr.3d 502, 226 P.3d 985 reaffirmed the holding in the *EPIC* case. The Court stated: "A long line of Court of Appeal decisions holds, in similar terms, that the impacts of a proposed project are ordinarily to be compared to the actual environmental conditions existing at the time of CEQA analysis, rather than to allowable conditions defined by a plan or regulatory framework."

Given this clear authority, environmental analysis for a sphere update must compare the current existing conditions and level of development with what could foreseeably occur if the services of the agency are expanded into the sphere. The land use designations in the applicable general plan certainly can act as a guide to what can forseeably develop, but cannot be considered part of the baseline for the analysis. Therefore, even if an area was included in the existing sphere of an agency for many years, and the general plan calls for substantial development, you still must look at what is actually "on the ground" now. If the area has not yet developed and the service provided by the agency is necessary for that development, the environmental analysis of the sphere must analyse the forseeable impacts of that development on the environment.

4. Reliance on County or City General Plan EIR May Not Avoid an EIR

The EIR for a general plan, if done in accordance with the standards of the *EPIC* case, normally analyses the impacts of the growth proposed in the plan over the existing conditions at the time the EIR was done. It therefore seems logical and appropriate for LAFCo's to rely on that analysis where feasible in preparing environmental documents for sphere, rather than replicate the analysis. This approach is expressly encouraged in CEQA in PRC Sections 21003(d) and (e) and 21094. It is particularly useful where a city has recently completed a general plan update and EIR for that plan and the plan covers the same area as the proposed city sphere.

Such reliance however, does not necessarily permit the LAFCo to avoid doing an EIR or supplemental EIR (SEIR) for a sphere update. Only where LAFCo is acting as a responsible agency for a city sphere update, may LAFCo avoid that requirement In all other cases, where LAFCo is acting as lead agency, if the EIR being relied upon is no longer current or included findings of significant, unavoidable impacts, than an EIR or SEIR may still be required.

LAFCo may be able to act as a responsible agency for city sphere updates under the current state of the law. There is language twice in §56425 that seems to contemplate that cities may make application for a sphere update. §56425(b) states in part:

Opinion Re Sphere Updates: CEQA and Statutory Timing Requirements

> *"(b) Prior to a city submitting an application to the commission to update its sphere of influence representatives from the city and representatives from the county shall meet…"*

Section 56425(d) goes on to say:

> *(d) If no agreement is reached pursuant to subdivision (b), the application may be submitted to the commission and the commission shall consider a sphere of influence for the city consistent with the policies adopted by the commission pursuant to this section.*

This is the only portion of the sphere update statutory provisions that suggests that sphere updates can be triggered by an application by an agency. This phrase inserted in provisions whose focus is upon the city and county meeting with regard to the sphere update is problematic as there is no procedure for such sphere update "applications" anywhere else in CKH. Otherwise the provision of 56425 very clearly imposes that duty upon the LAFCo alone to do the updates and sets mandatory schedules for doing them that are independent of any agency application.

Nevertheless the language is there and under the canons of statutory construction, must be given significance if at all feasible within the statutory scheme. (*United Farm Workers of America v. Agricultural Labor Relations Bd.* (1995) 41 Cal.App.4th 303,314,).Therefore, a city may "apply" for a SOI update and in so doing, assume lead agency status for the environmental review of that SOI update. If so, LAFCo can act as a responsible agency and use the environmental document prepared by the City for the SOI.

This exception is limited by the language of CKH and CEQA. First, under CKH the city must specifically and expressly take action to "apply" and conduct its environmental review based on that application. It is not enough that the city mentioned use of its general plan update for the sphere update. Under CEQA, the city must explicitly state in the environmental document that part of the "project" being considered is the city's application for the sphere update and the environmental document must take into account the LAFCo issues that arise in making such a determination.

Where LAFCo must act as the lead agency for the sphere update, it may still rely upon a city or county general plan for growth impacts, but such use can only occur if certain criteria are met. PRC Section 21094 (b) specifically requires that the agency proposing to rely upon a prior EIR for a later project must do an initial study first to determine whether the EIR meets CEQA's requirements for use with the later project. The agency may only rely upon the prior EIR if its study determines that all of the following are true: (1) the later project is consistent with the program, plan, policy, or ordinance for which an environmental impact report has been prepared, (2) the later project is consistent with applicable local land use plans and zoning of the city, county, or city and county in which the later project would be located, and (3) the circumstances under which a supplemental EIR would be required under PRC §21166 do not exist. Section 21166 in turn specifies three grounds for requiring a supplemental EIR to supplement an existing EIR. Those grounds are: (a) Substantial changes are proposed in the project which will require major revisions of the environmental impact report, (b) Substantial changes occur with respect to the circumstances under which the project is being undertaken which will require major revisions in the environmental impact report or (c) New information, which

was not known and could not have been known at the time the environmental impact report was certified as complete, becomes available.

The most common problems in using a prior EIR for a sphere update is that the EIR was completed for an area different than that proposed for the sphere and that the EIR is out of date. If the sphere plan covers an area different than that covered by the prior EIR, than that is a change in the project (from the project considered in the prior EIR) which under 21166 requires a new analysis and possibly a Supplemental EIR. If the EIR is out of date, it increases the probability that either the circumstances surrounding the project have changed or that new information becomes available that requires new evaluation. For example, a common problem today is that prior EIR's often did not consider GHG emissions and the change in legal requirements is either a "change in circumstances surrounding the project" or "new information" that requires a supplemental environmental document.

Even if the EIR being relied upon is reasonably current, and otherwise does not require supplementation under §21166, use of the prior EIR does not necessarily avoid doing a new or supplemental EIR for a sphere update. If the county or city general plan being relied upon for the sphere update made findings of unavoidable significant impacts remaining after mitigation, then any environmental document tiered off or relying upon that EIR must make similar findings. Both caselaw and the statute make clear that such reliance can only be done in the context of another EIR or SEIR. This is because it is only through the EIR process that an agency can make overriding findings required to address the unavoidable significant impacts identified in the EIR being relied upon.

As the Court of Appeal said in *Communities for a Better Environment v. Resources Agency* (2003) 103 Cal.App.4th 98**:**

> "*Even though a prior EIR's analysis of environmental effects may be subject to being incorporated in a later EIR for a later, more specific project, the responsible public officials must still go on the record and explain specifically why they are approving the later project despite its significant unavoidable impacts*" (*id* at pg 124-125)

See also PRC Section 21094 which authorizes tiering off EIRs and specifically Subdivision (a)(2) which was amended in 2010 to allow agencies to incorporate the overriding findings from a prior EIR but only in a subsequent tiered EIR.

Most competently prepared EIR's for general plans that I have encountered makes finding that certain impacts such as farmland conversion, impact on air quality, impact on wildlife or traffic are significant even after mitigation and unavoidable. The agency then made overriding finding under PRC§21083 and 15093 of the Guidelines of social or economic considerations that justify approval of the project notwithstanding the significant unavoidable impacts that will result.

If a LAFCo, acting as lead agency, wants to rely upon such a city or county general plan EIR that does contain significant and unavoidable environmental impacts, then it must likewise adopt the overriding findings. Under CEQA that can only be done in the context of an EIR or SEIR.

Opinion Re Sphere Updates: CEQA and Statutory Timing Requirements

As the above discussion demonstrates, except in the one situation where a city is applying for a sphere update and LAFCo can act as a responsible agency, reliance on a city or county general plan EIR to address the indirect growth impacts of a sphere update is not a panacea for the overworked LAFCo staffer. CEQA requires LAFCo to make careful consideration of the prior EIR to insure it is appropriate and for the sphere under consideration and not out of date. If the prior EIR included findings of unavoidable significant impacts, then an EIR or SEIR will be required in any event to allow the LAFCo to make the overriding findings.[2] That EIR or SEIR may be substantially simplified by reliance on the prior EIR, but it must follow the EIR procedures and cannot be done in the form of a negative declaration.

5. **The Evaluation Must Include Evaluation of Green House Gas Emissions**

One of the problems in relying upon a prior EIR is that most such EIR's did not include any analysis of Green House Gas Emissions (GHG) . While the requirement to analyze GHG has arguably been the law since SB 97 in 2007, once Section 15064.4 was added to the State CEQA Guidelines in 2010, it is now unquestionably a mandatory component of any environmental analysis, including sphere updates.

Compliance with the requirements under §15064.4 for GHG analysis is not easy. The Guidelines require the lead agency to "make a good-faith effort, based to the extent possible on scientific and factual data, to describe, calculate or estimate the amount of greenhouse gas emissions resulting from a project." The agency must then evaluate the significance of those emissions by comparing them to the existing environmental setting, comparing them against a a threshold of significance that the lead agency determines applies to the project and or considering the extent to which the project complies with regulations or requirements adopted to implement a statewide, regional, or local plan for the reduction or mitigation of greenhouse gas emissions. If there is substantial evidence (ie "a fair argument") that the possible effects of a particular project are still cumulatively considerable notwithstanding compliance with the adopted regulations or requirements, an EIR must be prepared.

The difficulty in complying with these requirements is that there is as yet very little data or programs upon which to base the evaluation. The agency whose sphere is being considered seldom has information on GHG emissions even for its own operations. Few communities have developed quantitative analyses of GHG emissions in the community to provide a baseline for evaluation. Very few counties, cities, air resources or air quality boards have developed numerical thresholds of significance appropriate for use with projects such as spheres. Nor have most adopted Climate Action Plans that provide regional mitigation programs that can be followed to mitigate GHG impacts.

These problems will eventually be resolved as data is developed and Climate Action Plans adopted. For now, however, it creates great uncertainty in addressing GHG. §15064.4(a)(2) does allow the use of "qualitative" analyses or performance based standards in place of quantitative analysis. How

[2] PRC Section 21094 was amended in 2010 to allow in Subdivision(a)(2) for agencies to incorporate the overriding findings made with the prior EIR rather than adopt their own findings under certain limited circumstances. Those include that the incorporation must occur in a later tiered EIR, (PRC §21094(a)) and the prior EIR is less than 3 years old (PRC §21094(a)(2)(D)). This amendment is only operative until 2016.

far the courts will allow an agency to go in "qualitatively" evaluating impacts without numbers to back it up is unknown. Since there are so few established mitigation programs, it is difficult to develop a mitigation program which reliably reduces the project's contribution to GHG below the "cumulatively considerable" threshold required to avoid an EIR.

Given all of these uncertainties in addressing GHG emissions, LAFCo's should proceed with considerable care in undertaking such analysis. Where there is any potential for significant GHG emissions either directly from operations or indirectly from growth induced by extension of services, the the LAFCo should consider doing an EIR. Only by doing an EIR does the burden shift from the agency to show no substantial evidence of a potential GHG impact to the challenger of the EIR.

II. Sphere of Influence Updates

The environmental requirements set forth above, if observed, impose significant burdens for LAFCo's in preparation of sphere of influence updates. Given the current limitations on local government finances and resources, the logical follow up question is what are the consequences if a LAFCo fails to complete its updating of spheres in accordance with the statutory mandate? While there is as yet no direct authority on this point, given the legislative language and function of spheres, they are likely to be treated similar to general plans. Failure to have an adequate and up to date general plan is grounds for invalidation of the plan and any planning decisions based on that plan. So too, failure to update spheres is likely to be found to invalidate any sphere amendments and changes of organization based on that outdated plan.

The Legislature in 1971 required Local Agency Formation Commissions to prepare spheres of influence for each agency subject to their jurisdiction (Stats. 1971, Chapter 1241). The purpose of spheres were set forth in *Placer LAFCo v Nevada LAFCo* (2006) 135 Cal.App.4th 793 at 806-807

> *A sphere of influence is a flexible planning and study tool to be reviewed and amended periodically as appropriate." (City of Agoura Hills v. Local Agency Formation Com. (1988) 198 Cal.App.3d 480, 490, 243 Cal.Rptr. 740.) Upon determination of a sphere of influence, the commission shall adopt that sphere, and shall review and update, as necessary, the adopted sphere every five years. (§ 56425, subds. (f), (g).) The sphere of influence is one of the factors to be considered in reviewing a proposal for a change of organization. (§ 56668, subd. (h).) Determinations about changes of organization shall be consistent with the spheres of influence of the local agencies affected. (§ 56375.5.)*

It has long been established that annexations cannot be approved until LAFCO has established and duly considered relevant spheres of influence. (See *Resource Defense Fund v. Local Agency Formation Com.* (1983) 138 Cal.App.3d 987 [188 Cal.Rptr. 499].)

In 2000 the Legislature adopted a major reorganization of the LAFCo law and renamed it "the the Cortese Knox Hertzberg Local Government Reorganization Act" , abbreviated as "CKH". As part of the act, CKH included a new requirement that "On or before January 1, 2006, and every five years thereafter, the commission shall, as necessary, review and update each sphere of influence (§ 56425,

subd (g).) This deadline was later extended to January 1, 2008. To provide informational support for the Sphere updates, the Legislature required LAFCo's to prepare municipal service reviews prior to the sphere updates. (§56430).

There is yet no reported case on the consequences of failure to update spheres as required by §56425(g). However, Peter Detwiler, the recently retired long term legislative analyst for the Senate Local Government Committee, addressed the issue in a 2007 position paper entitled "LAFCO Litigation Looms". He pointed to the similarity between sphere requirements and general plan requirements as providing relevant guidance. As he pointed out, LAFCOs' boundary decisions must be consistent with their spheres of influence (§56375.5). This requirement parallels the "vertical consistency" rule which requires local subdivision decisions to be consistent with county and city general plans (§66473.5). Counties and cities can't approve subdivisions if their general plans are incomplete (*Save El Toro Ass'n v. Days* [1977] 74 Cal.App.3d 64) or inadequate (*Camp v. Board of Supervisors* [1981] 123 Cal.App.3d 334). Local officials have an implied duty to keep their general plans up-to-date (*De Vita v. County of Napa* [1995] 9 Cal.4th 763).

I must agree with Peter. It is likely that if the issue is placed before the Courts, they will find that an outdated sphere of influence is like an outdated general plan. An outdated sphere of influence does not provide an adequate legal basis for making the statutorily required vertical consistency finding to support an annexation.

It is also likely that a sphere amendment to an outdated sphere of influence would be equally vulnerable, if only indirectly. CKH does not define the terms "sphere update" or "sphere amendment", but makes a distinction between them. Sphere updates are provided in Section 56425 while sphere amendments are authorized by Section 56428. Sphere updates are primarily the responsibility of the LAFCo to complete within the statutory deadlines, after preparation of municipal service reviews to support the sphere updates. Sphere amendments are elective under 56428 and initiated by affected agencies and petitioners, with no specific requirement for preparation of municipal service reviews. The statutory context therefore indicates that LAFCo determinations on sphere updates are intended as comprehensive reviews by LAFCo of the agency services and boundaries. Sphere amendments are targeted proposals to change specific boundary areas.

There is no explicit consistency requirement in CKH between sphere amendments and sphere updates. However, given the clear requirement in the law for sphere updates and MSR's, it is an open question whether a LAFCo can legally adopt an amendment to an outdated sphere when the necessary comprehensive update has not been done. Certainly, as noted above, there is an explicit requirement of consistency finding with regard to annexation. Therefore, even if a sphere amendment can proceed, it is doubtful that a lawful consistency finding could be made for any annexation within the area of the sphere amendment based on an outdated sphere of influence. In summary, failure to update an agency sphere of influence is likely to found to invalidate any annexation based on the outdated sphere and may also invalidate sphere amendments to that outdated sphere.

CONCLUSION

This opinion has attempted to address two major legal issues LAFCo's face in addressing the requirements of CKH to update spheres of all agencies every five years: What are the requirements of CEQA applicable to completing those sphere updates and what are the consequences of failing to update spheres in a timely manner? The two issues are directly intertwined in that the greater the CEQA requirements for updating the spheres, the more expensive and time-consuming the updates become and the greater the resistance to doing them according to the statutory schedule. Unfortunately as this opinion has demonstrated, there is no legal shortcut to simplifying the environmental review of major agency spheres, other than where a city chooses to apply for a sphere update and assume the burdens of lead agency responsibilities. In many cases, an EIR or SEIR is the only appropriate environmental document that will pass muster in the courts. Nor are the Courts likely to give a pass to a LAFCo that fails to comply with the statutory requirements to update the spheres of its agencies. Commission decisions based on an outdated sphere are likely to be invalidated if challenged just as planning decisions are that are based on an inadequate and outdated general plan.

Given the difficult financial position of many local agencies, there is strong pressure upon LAFCo's to reduce their budgets and workplans. Commissioners question the expense and need for doing EIR's for sphere updates and stretch out the schedule of doing updates far beyond the statutory mandates. All of this is entirely understandable. However it must also be understood that there is no "economic hardship" excuse that is recognized in our system of law. Should a citizen insist that a LAFCo comply with the law and actually take it to court, LAFCo could lose and face significant legal, financial and political consequences.

I know this opinion does not provide welcome news. However it is the responsibility of staff and particularly legal counsel to provide our Commissions with our best, objective advice, so that the Commission may make fully informed decisions.

Sincerely,

P. Scott Browne
LAFCo Counsel

REPORT TO CITY COUNCIL

City of Nevada City
317 Broad Street
Nevada City CA 95959
www.nevadacityca.gov

APRIL 11, 2018

TITLE: Medical Cannabis Business Permit Format And Indemnification Agreement

RECOMMENDATION:

- Review the draft Indemnification Agreement prepared by the City Attorney and provide direction.
- Make a motion to pass Resolution 2018-XX, authorizing a permit format to be used for permitting any qualifying medical cannabis business.
- Provide direction to staff to move forward in creating a permit fee/deposit.

CONTACT: Amy Wolfson, City Planner

BACKGROUND / DISCUSSION: On April 22, 2017, the City Council adopted Ordinance 2017-06. On June 28, 2017 Ordinance 2017-10 was adopted with amendments to 2017-06 establishing chapter 9.22 of title 9 of the Nevada City municipal code to allow for the permitting and regulation of medical cannabis businesses to operate within the City provided they receive a permit from the City and comply with all state and local legal requirements.

MEDICAL CANNABIS PERMIT: A City-issued permit is required in order for any medical cannabis business to operate within the City. The approving body (City Council or Planning Commission) may approve an application subject to conditions of approval, which must be completed to the satisfaction of the City, prior to issuance of a permit. The permit is the last step in the application process required before a business may begin operation.

Indemnification Agreement: Among the conditions of approval is a requirement that the applicant file an indemnification agreement as follows:

> *"in a form approved by the City Attorney, agreeing to indemnify, defend (at applicant's sole cost and expense), and hold the City of Nevada City, and its officers, officials, employees, representatives and agents, harmless, from any and all claims, losses, damages, injuries, liabilities or losses which arise out of, or which are in any way related to, the City's issuance of the medical cannabis business permit, the City's decision to approve the operation of the medical cannabis business or activity, to the process used by the City in making its decision, or the alleged violation of any federal, state or local laws by the medical cannabis business or any of its officers, employees or agents."*

At the March 28 Council meeting staff was directed to consider public comments regarding the removal of references to "dispensary" businesses and revise it to be more broadly applicable to all medical cannabis businesses, which has been completed. Staff was also directed to consider comments from the legal teams of medical cannabis businesses. Staff received an amendment request from Phil Ritti, who represents two

medical cannabis business applicants. Ritti's legal staff recommens that wording be removed which could be considered self-incriminating, in terms of an applicant's awareness of cannabis as it relates to Federal law. Due to the late submittal request, the City Attorney was unable to comment on this requested change prior to publishing the staff report. A copy of the agreement as initially written by the City Attorney is attached with redlines indicating the requested amendments. Staff is seeking direction on the requested amendments and for any language changes before distributing to qualifying applicants for signature.

Permit Format: The drafted permit format includes a checkbox that is intended to reflect the category of business being permitted, along with the location and permit issuance date. The permit format is intended to be visible in a prominent place at the medical cannabis facility entrance. Businesses in the dispensary category are required to provide a "Community Relations Contact" pursuant to Section 9.22.140.B(1) of the City Municipal Code. At the March 29th meeting, staff received direction to make sure we can encompass all allowed activities under the Ordinance. Staff has revised the permit format to be more general, particularly in terms of the manufacturing category, and also encompass the cultivation activity with an assumption of a ban on mature plant cultivation. Finally, the permit format has been amended to add a line to fill in the State License Type(s) issued. It remains staff's preference to avoid specifically tying the City's broad permit categories with the specific types of licenses that will be issued by the State. Attached is a Resolution for the adoption of the permit format in substantially the same format as provided in Exhibit A of the Resolution.

Permit Issuance Fee: At the March 28, 2018 meeting City Staff, based on previous with the application fee structure not being adequate to cover City costs for application processing, made the recommendation the City Planner and City Manager develop a deposit based fee structure for the permit and bring it forward at tonight's meeting. This will enable the City to pass through any unforeseen costs, to the potential permittee, if the original deposit is not adequate. The City Planner in conjunction with the City Manager have reviewed the process required for issuing the permit and have an estimation of staff time to review conditions of approval and conduct facility inspections. Final inspections are required by the Police, Fire, Planning Department, and the City Manager's Office. Inspections are anticipated to vary in their scope depending on the type of business being permitted and the size of the facility. It has been approximated that a $1,500 deposit based fee captures the actual cost of inspections and administrative time but will allow the City to require additional deposit to cover any unanticipated costs.

ENVIRONMENTAL CONSIDERATIONS: Not applicable.

FISCAL IMPACT: The City's proposed fee deposit structure will provide full cost recovery to the City for staff time and consultant services via the applicant-paid fees.

ATTACHMENTS:

- ✓ Drafted Indemnification Agreement Language
- ✓ Resolution 2018-XX Medical Cannabis Business Permit Format
- ✓ Resolution 2018-XX Medical Cannabis Business Permit Fees

INDEMNIFICATION AND HOLD HARMLESS AGREEMENT
OF "_____"
<insert business name>

Insofaras "_____ <insert business name>" has been approved to operate a medical cannabis business at _____ <insert business address> in Nevada City and is required by subsection E(1) of Nevada City Municipal Code Section 9.22.080 to execute an indemnity agreement before it may commence operations:

IT IS THEREFORE AGREED that permittee/indemnitor "_____" <insert business name> shall indemnify, defend (at permittee/indemnitor's sole cost and expense), and hold the City of Nevada City, and its officers, officials, employees, representatives, and agents, harmless from and against any and all claims, demands, liabilities, losses, damages, actions, judgments, penalties, sanctions, losses, costs, court costs, and legal or other expenses of every kind and description (including attorneys' fees of City in its defense) which the City of Nevada City may sustain, incur, or become liable for as a direct or indirect consequence arising out of, or which are in any way related to, the City's issuance to it of a medical cannabis business permit, the City's decision to approve the operation of the medical cannabis business or activity, to the process used by the City in making its decision, or any alleged violation of federal, state or local laws by the medical cannabis business or of its officers, employees or agents.

It is understood that this indemnity agreement also requires the indemnitee to defend any actions or proceedings brought against the City if City requests such a defense, provided however that nothing in this indemnity agreement obligates the City to so tender its defense and the City has the right to elect to conduct its own defense (for any reason) with the costs and attorney's fees thereof covered by this indemnity agreement.

~~Permittee is aware that t~~The cultivation, possession, distribution and sale of any type of cannabis, including medical cannabis, is prohibited under Federal Law. ~~and that A~~any medical cannabis business permit issued by the City of Nevada City does not provide any immunities or defenses to State or Federal prosecution or

enforcement actions against retailer permittees, their cultivators, processors, manufacturers, suppliers or other parties involved in any medical cannabis activity and acknowledges that the permit from the City of Nevada City should not be relied upon as providing any immunities or defenses from such prosecution or enforcement actions.

Executed on _____, 2018, at Nevada City, California

PERMITTEE/INDEMNITOR

"_____"
<insert business name>

By:_____

Its:_____

Address for notices to Indemnitor

"_____"
<insert business name>

_____

_____
<insert business address>

Received on behalf of Nevada City by:

_____
Hal DeGraw, City Attorney

RESOLUTION NO. 2018-XX

A RESOLUTION OF THE CITY COUNCIL OF THE CITY OF NEVADA CITY, STATE OF CALIFORNIA, TO APPROVE A PERMIT FORMAT FOR A MEDICAL CANNABIS BUSINESS PERMIT

The City Council of the City of Nevada City finds and determines that:

WHEREAS, The City Council adopted Ordinance No. 2017-06 with amendment Ordinance No. 2017-10, which established Chapter 9.22 and imposes regulations for medical cannabis businesses to operate within the City of Nevada City, provided they received a permit from the City and comply with all other state and local legal requirements; and

WHEREAS, Section 9.22.030 of Chapter 9.22 requires the City Council to issue a permit before commencement of operation of a medical cannabis business.

NOW, THEREFORE, BE IT RESOLVED by the City Council of the City of Nevada City as following:

Section 1. The City Council hereby approves the Medical Cannabis Business Permit format in substantially the same format as Exhibit 1 attached hereto and incorporated herein by this reference. The City Manager or his or her designee is hereby authorized to make changes to the document approved herein provided the changes are consistent with Chapter 9.22 of the Nevada City Municipal Code.

PASSED AND ADOPTED at the regular meeting of the City Council of the City of Nevada City on the 11th day of April, 2018, by the following vote:

AYES:

NOES:

ABSENT:

ABSTAIN:

_____

Duane Strawser, Mayor

ATTEST:

_____

Niel Locke, City Clerk

PERMIT TO OPERATE
A MEDICAL CANNABIS BUSINESS
IN THE FOLLOWING CATEGORY(IES)

(This permit shall be displayed on the premises in a prominent location, near the main entrance)

☐ **Dispensary**

COMMUITY RELATIONS CONTACT (pursuant to Section 9.22.140.B(1)):

_____, _____, _____

<Insert Name.> <Insert phone number.> <Insert email address.>

☐ **Manufacturing** (check all that apply)

- ☐ Volatile Extraction
- ☐ Non-volatile Extraction
- ☐ Non-extraction, Other _____

☐ **Distribution** (check one)

- ☐ For own product only
- ☐ For any licensed facility

☐ **Cultivation** (check all that apply)

- ☐ Nursery
- ☐ Drying, Curing, Trimming

☐ **Testing Laboratory**

LOCATION:_____

<Insert site address and suite number, if applicable>

STATE LICENSE TYPE(S):_____

Section 9.22.030 (B) Medical Cannabis Dispensary Employee Qualifications and Training; Employer Obligations to Monitor Employee Compliance.

(1) The owner or operator of a medical cannabis business shall ensure that all employees comply with all the requirements of this Chapter 9.22.

(2) Medical cannabis business owners or operators shall ensure that employees are educated as to all the requirements of this Chapter 9.22 and applicable state law requirements for medical cannabis businesses and that they adhere to all applicable requirements.

(3) Failure of the owner or operator to take reasonable steps to comply with these requirements shall be grounds for permit revocation.

This permit is subject to compliance with Section 9.22 of the Nevada City Municipal Code and to the operating requirements therein (see subsections 9.22.90, 9.22.100, 9.22.110, & 9.22.120, as well as your approved application, including conditions of approval. This permit is valid for twelve (12) months from the date of issuance, indicated below. Operator is required to submit a request for permit renewal within sixty (60) days of the expiration in order to avoid a lapse in operation.

DATE OF ISSUANCE:_____

_____
Police Chief
(or designee)

_____
Catrina Olson, City Manager
(or designee)

RESOLUTION NO. 2018-XX

A RESOLUTION OF THE CITY COUNCIL OF THE CITY OF NEVADA CITY ESTABLISHING A FEE DEPOSIT FOR ISSUANCE OF PERMITS TO QUALIFYING MEDICAL CANNABIS BUSINESSES

WHEREAS, the City Council adopted Ordinance No. 2017-06 which established Chapter 9.22, together with the amendment Ordinance No. 2017-10 of the Municipal Code which established regulations for the permitting and operation of medical cannabis businesses within Nevada, provided that business operators received a permit from the City and comply with all other state and local legal requirements; and

WHEREAS, Section 9.22.030 of Chapter 9.22 requires that operators receive a permit from the city before commencement of medical cannabis business operations or activity; and

WHEREAS, Conditions of approval may include final inspection by the Fire, Police, and Planning Departments, and the City Manager's Office; and

WHEREAS, Section 9.22.070 of Chapter 9.22 requires that the City Manager issue a medical cannabis business permit, requiring sign off by both the City Manager and the Chief of Police; and

WHEREAS, the City of Nevada City desires to seek full cost recovery for staff and consultant related costs and expenses via applicant-paid fees.

NOW, THEREFORE, BE IT RESOLVED

The City Council establishes Medical Cannabis Business Permit Fee Deposit, with a minimum deposit of $1,500 and recovery of any additional cost associated with facility inspection and administrative services.

PASSED AND ADOPTED at the regular meeting of the City Council of the City of Nevada City on the 11th day of April, 2018, by the following vote:

AYES:

NOES:

ABSENT:

ABSTAIN:

_____

Duane Strawser, Mayor

ATTEST: _____

Niel Locke, City Clerk

REPORT TO CITY COUNCIL

City of Nevada City
317 Broad Street
Nevada City CA 95959
www.nevadacityca.gov

APRIL 11, 2018

TITLE: An Ordinance Of The City Of Nevada City Amending Chapter 9.22 Of The Nevada City Municipal Code Relating To Restrictions On Medical Commercial Cannabis Businesses And Limiting Activity That May Occur Under The City's Medical Cannabis Cultivation Permit

RECOMMENDATION: Hold a first reading for an Ordinance amending Chapter 9.22.110 with Subsection H, allowing activities related to nursery growing of immature plants and allowing processing of cannabis flower within city limits and adding Chapter 9.22.115 to prohibit commercial medical cannabis cultivation activities related to growing mature plants.

CONTACT: Amy Wolfson, City Planner

BACKGROUND / DISCUSSION: On June 28, 2017, the City Council adopted Ordinance 2017-10, amending chapter 9.22 of title 9 of the Nevada City municipal code to allow for the establishment, permitting, and regulation of medical cannabis cultivation, manufacturing, distributing, and testing laboratory businesses to operate within the city, provided they receive a permit from the City and comply with all state and local legal requirements. The ordinance allows the planning commission to issue permits to qualified applicants at approved locations for any of the above categories of medical cannabis business.

A ban of all indoor commercial cannabis cultivation facilities was considered by Council at their February 28th meeting. Ultimately, a complete ban on "cultivation" activity was rejected by Council because such a ban would have had the effect of precluding indoor Processor (State CDFA license type P) and Nursery (State CDFA license type 4) operations that did not involve cultivation of cannabis plants to maturity, which Council has expressed a desire to allow.

At their meeting on March 28, 2018, the City Council directed staff to draft language to amend Ordinance 2017-10 in a manner that would

- Prohibit medical cannabis cultivation of mature plants,
- Allow medical cannabis processing and nursery businesses within the City's "cultivation" permit category to operate within city limits.
- Limit the number of Nursery operations from occurring to no more than one business per parcel.

PROPOSED ORDINANCE: The City's cannabis regulations were enacted under the authority of the Medical Cannabis Regulation and Safety Act, typically referenced as the MCRSA". On

June 27, 2017, Governor Brown signed into law Senate Bill 94, the Medicinal and Adult Use of Cannabis Regulation and Safety Act ("MAUCRSA"), repealing MCRSA and creating a unified regulatory structure for adult use and medical cannabis, including regulation of non-storefront cannabis retailers
The first two sections of the ordinance update the statutory authority reference in the municipal code to the Medicinal and Adult Use of Cannabis Regulation and Safety Act ("MAUCRSA").

Pursuant to Council direction the draft Ordinance before you adds Subsection H to Chapter 9.22.110 of the Nevada City Municipal which allows for processor (drying, curing, and trimming of cannabis flower) and nursery activity under the Cultivation permit category. Nursery operations are allowed at a maximum concentration of one per parcel. The Ordinance also adds section 9.22.115 which prohibits growing activity related to mature plants.

The City does not currently have any applications seeking a medical cannabis cultivation facility and there is no indication that the draft ordinance amendment will impact any existing application or any potential application that has requested a zoning verification letter.

ENVIRONMENTAL CONSIDERATIONS: This ordinance amendment is considered exempt from review under the California Environmental Quality Act pursuant to Title 14, Chapter 3, California Code of Regulations, CEQA Guidelines Section 15061 (b)(3) – Activity is not subject to CEQA because it can be seen with certainty that there is no possibility that enacting regulations to limit commercial medical cannabis cultivation will not have a significant effect on the environment.

FISCAL IMPACT: This Ordinance amendment will not impact the fee structure currently in place for all medical cannabis business applications.

ATTACHMENTS:

- ✓ Draft Ordinance No. 2018-XX, amending the City Municipal Code to prohibit medical cannabis cultivation businesses within the City

ORDINANCE NO. 2018-XX

AN ORDINANCE OF THE CITY OF NEVADA CITY AMENDING CHAPTER 9.22 OF THE NEVADA CITY MUNICIPAL CODE RELATING TO RESTRICTIONS ON MEDICAL COMMERCIAL CANNABIS BUSINESSES AND LIMITING ACTIVITY THAT MAY OCCUR UNDER THE CITY'S MEDICAL CANNABIS CULTIVATION PERMIT

WHEREAS, the City Council passed and adopted Ordinance No. 2017-05 on March 22, 2017, enacting Chapter 17.140 of the Nevada City Municipal Code regulating personal cannabis cultivation regulations; and

WHEREAS, said regulations prohibited outdoor personal cultivation of cannabis and imposed limitations on personal indoor cannabis cultivation including limitations on size not to exceed 25 square feet or six living plants without approval of the Chief of Police based upon a documented showing of medical necessity; and

WHEREAS, the City Council passed and adopted Ordinance No. 2017-10 on June 28, 2017, amending Chapter 9.22 of the Nevada City Municipal Code entitled Medical Cannabis Dispensaries and other Cannabis Businesses and Activity that allowed for the establishment, permitting and regulating of other medical cannabis businesses, including commercial medical cannabis cultivation facilities, and

WHEREAS, said regulations prohibited outdoor cultivation of cannabis and required that all allowed cannabis cultivation must occur indoors, but did not impose any size limitations on commercial medical cannabis cultivation facilities when adding section 9.22.110 entitled Additional Requirements for Cultivation Facilities (potentially creating confusion by omitting the "Medical" modifier); and

WHEREAS, a ban of indoor commercial cannabis cultivation facilities was considered but initially decided against in favor of just limiting cultivation activity because such a ban on "cultivation" would have had the effect of precluding indoor Processor (State CDFA license type P, "Processor") and Nursery (State CDFA license Type 4, "Nursery") operations that did not involve cultivation of cannabis plants to maturity that the City wanted to allow; and

WHEREAS, upon reconsideration, it was determined desirable to ban commercial cannabis cultivation rather than just limiting the size of such grow facilities, as long as Processor and Nursery operations were excluded from such a ban and allowed to be permitted, so long as the regulations precluded large grows of mature plants in the same location; and

WHEREAS, the State regulations defer to imposition by cities of regulation of cannabis businesses that are more restrictive than State licensing, including stricter limits on cultivation activities and concentration of cannabis cultivation;

NOW THEREFORE, BE IT ORDAINED by the City Council of the City of Nevada City as follows:

SECTION I:

Section 9.22.010, subsection B, Legal Authority, is amended to read as follows:

B. Legal Authority. Pursuant to Sections 5 and 7 of Article XI of the California Constitution, and the provisions of the Medicinal and Adult Use of Cannabis Regulation and Safety Act ("MAUCRSA"), the city is authorized to adopt ordinances that establish standards, requirements and regulations for local licenses and permits for cannabis and cannabis-related activity. Any standards, requirements, and regulations regarding health and safety, security, and worker protections established by the state, or any of its departments or divisions, shall be the minimum standards applicable in the city to cannabis, and/or cannabis-related activity.

SECTION II:

All references to the Medical Cannabis Regulation and Safety Act ("MCRSA") in Chapter 9.22 shall be replaced with a reference to the Medicinal and Adult Use of Cannabis Regulation and Safety Act ("MAUCRSA"), including but not limited to the references in Section 9.22.020, Definitions, subsections cc and dd.

SECTION III:

Subsection B of Section 9.22.040, Medical Cannabis Businesses, shall be amended to read as follows:

The Planning Commission may issue permits to other qualified medical cannabis business owners or operators to operate medical cannabis commercial cultivation (nursery or processor only), manufacturing, manufacturing, distribution, transporting, or testing laboratory businesses within the City of Nevada City through the application and permit approval process contained in this Chapter 9.22 and resolutions adopted pursuant to this Chapter. All medical cannabis businesses must obtain a medical cannabis business permit from the City before commencing operations, must be in compliance with all applicable state and federal laws pertaining to its operation, including obtaining all necessary licenses from the state, and shall comply with all applicable operational and zoning requirements set forth in the Nevada City Municipal Code. Nothing in this Chapter creates a mandate that the Planning Commission

or the City Council must issue one or more medical cannabis business permit to a medical cannabis cultivator, manufacturer, distributor, transporter, or testing laboratory if the Planning Commission or the City Council determines that there are no qualified applicants, the proposed locations for medical cannabis businesses are incompatible with neighboring land uses, or if the Planning Commission or the City Council determines that the issuance of a medical cannabis business permit would have a negative effect on the health, safety, or welfare of the citizens or businesses of Nevada City, or for any other reason allowed by law."

SECTION VI:

To follow the format of preceding and following sections and to make clear that all City regulations of commercial cannabis businesses relate to medical, not recreational cannabis, the title of Section 9.22.110 of Chapter 9.22 of the Nevada City Municipal Code is amended to read as follows:

"**9.22.110. Additional Requirements for Medical Cannabis Cultivation Facilities.**"

SECTION V:

Subsection G of Section 9.22.110 Additional Requirements for Cultivation Facilities is amended to read as follows:

G. All applicants for a medical cannabis commercial cultivation permit shall submit the following in addition to the information otherwise required by this Chapter for a medical cannabis business:
(Subparts 1 through 4 remain included in subsection G and unchanged)

SECTION VI:

Section 9.22.110 Additional Requirements for Cultivation Facilities is amended to add subsection H to read as follows:

"H. Commercial Cultivation operations defined as State-licensed Indoor facilities for medical cannabis cultivation consisting only of processing (drying, curing, and trimming of cannabis flower (corresponding with State CDFA Cultivation License Type for "Processor") or nursery operations (corresponding with State CDFA Cultivation License Type for "Nursery") are not prohibited by section 9.22.115 of this code, provided that nursery operations shall be limited to one operation per any parcel no greater than 10,000 square feet in size, regardless of whether the nursery operation is conducted by single or multiple permittees.

SECTION VII:

There is hereby added to Chapter 9.22 of the Nevada City Municipal Code a new Section 9.22.115 to read as follows:

"**9.22.115. Certain Medical Cannabis Cultivation Facilities Prohibited.**"

A. Except for personal cannabis cultivation allowed pursuant to Chapter 17.410 and medical cannabis commercial cultivation consisting of only processing and nursery operations pursuant to California state licenses not involving cultivation of cannabis plants to maturity and in compliance with Section 9.22.110, cultivation of cannabis is not permitted in the City of Nevada City and it shall be unlawful for any person or collective or cooperative organization to engage in, conduct, or carry on, or to permit to be engaged in, conducted or carried on cultivation of cannabis for any purpose in or upon any premises in the City of Nevada City.

B. Wherever commercial cannabis cultivation businesses appear to be allowed or conditionally allowed in this Nevada City Municipal Code, they will be limited to Commercial Cultivation as defined in subsection 9.22.0200 E.

SECTION VIII:

In all other respects Chapter 9.22 shall remain unchanged and in full force and effect, though limited in application to cultivation consisting only of State-licensed processing and/or nursery operations so long as section 9.22.115 remains in effect.

SECTION IX:

This Ordinance shall become effective 30 days after its final adoption and a copy of this ordinance shall be published in The Union, a newspaper of general circulation, within fifteen (15) days of the date of its passage.

PASSED AND ADOPTED this ___ day of _____, 2018 by the following vote:

AYES:

NOES:

ABSENT:

ABSTAIN:

_____

Duane Strawser, Mayor

ATTEST:

_____

Niel Locke, City Clerk

REPORT TO CITY COUNCIL

City of Nevada City
317 Broad Street
Nevada City CA 95959
www.nevadacityca.gov

APRIL 11, 2018

TITLE: Review Of Community And Economic Support Program Applications

RECOMMENDATION: Review proposals and provide direction related to the funding requests and the amount of funding to incorporate into the Fiscal Year 2018/19 budget.

CONTACT: Catrina Olson, City Manager

BACKGROUND / DISCUSSION:

In September 2015, the City Council approved a Community and Economic Support Program to integrate periodic community requests for funding each January into the City's annual budget development process. This approach was intended to facilitate the City Council's ability to identify and prioritize budget appropriations for these requests while considering available resources. The Program's purpose is to promote Nevada City's commerce and increase business activity to help achieve the following goals:

- Promotion and marketing of Nevada City
- Support of community events
- Enhance education
- Improve aesthetics of a commercial area
- Improve the perception and/or practice of the City as business friendly

The City placed a Request for Proposals on its website soliciting proposals through March 31, 2018. The policy identifies January 1 as the application deadline, however the City overlooked getting the requests out to meet that time frame so accepted applications through March 31, 2018. The application (attached) is for community programs promoting Nevada City commerce and business activity, and emphasize that the City's support of an outside organization should be considered a temporary or one-time commitment with the expectation that the event/project, if applicable, have a plan to become self-sustaining.

Applicants were notified that the City anticipated budgeting approximately $5,000 for this program in Fiscal Year 2018/19. The application recommended proposals target support requests between $250 and $1,000, and noted that submission of an application was not a guarantee of funding. Three applications totaling $7,000 were submitted to the City for Community and Economic Support Program funding.

PROJECT NAME	DESCRIPTION	SUBMITTED BY	AMOUNT REQUESTED
Nevada City Tree Tour	Nevada City Heritage Tree Tour Map update to add numbers to the digital map for easier walking and print updated brochures of the map.	Nevada City Chamber of Commerce	$1,000
Nevada City Bicycle Classic	Increased promotion and marketing of the 58th Annual Nevada City Bicycle Race.	Nevada City Chamber of Commerce	$5,000
Sargent/19th Amendment	Promotion of the Sargent/19th Amendment Statue Project with logo/brochure design and printing of the brochure.	The Famous Marching Presidents of Nevada City, CA	$1,000

Staff has reviewed the applications and confirmed they meet program goals and eligibility guidelines. The attached applications include additional narrative for the proposals.

Staff is recommending the City Council review the proposals and provide guidance related to the funding requests and the amount of funding to incorporate into the Fiscal Year 2018/19 budget.

ENVIRONMENTAL CONSIDERATIONS: Not applicable.

FINANCIAL CONSIDERATIONS: City staff will work with the City Council to incorporate desired funding into the Fiscal Year 2018/19 budget.

ATTACHMENTS:

- ✓ FY 2018/19 Community and Economic Support Program Application
- ✓ Community and Economic Support Program Policy
- ✓ Funding Applications

City of Nevada City

FY 2018/19 COMMUNITY ECONOMIC SUPPORT PROGRAM APPLICATION

Submit application to: Nevada City Hall
Attn. City Manager
317 Broad Street
Nevada City, CA 95959

PROCESS AND INSTRUCTIONS

The City of Nevada City established a Community Economic Support Program to provide funding for special events, marketing activities, or other economic development-related activities providing a public benefit to the City.

The primary purpose of the Program is to provide one-time sponsorships and grants that promote the City of Nevada City's commerce and increase business activity to help achieve the following goals:

- Promotion and marketing of Nevada City
- Support of community events
- Enhance education
- Improve aesthetics of a commercial area
- Improve the perception and/or practice of the City as business friendly

In almost all cases, the City's support of an outside organization should be considered a temporary or one-time commitment. Does your organization or event have a plan to become financially self-sustaining?

Applications will be accepted during the month of March 2018. Awards are anticipated to be made by July 1, 2018 upon annual budget approval for the July 1, 2018 to June 30, 2019 fiscal year. Based on prior year budget resources, it is anticipated the City will budget a total of $5,000 in Fiscal Year 2018/2019 for this program. Therefore, it is recommended that proposals target support of between **$250 and $1,000**.

Please note that submission of an application **is not a guarantee of funding**. Incomplete applications may be disqualified from consideration. The City reserves the right to request additional information within a prescribed time frame as part of its review process.

Please refer all questions regarding this application to Catrina Olson, City Manager, at (530) 265-2496, ext. 134 or Catrina.Olson@nevadacityca.gov.

Part One – General Information

Organization Name:	**Project Name:**
Address:	
Contact Person (Name/Title):	
Contact Email:	
Contact Telephone:	
Website:	
Amount of Funding Requested:	

Part Two – Project Specifics

DIRECTIONS: Please prepare and attach a narrative of your proposed use of Community Economic Support Program funds that addresses each of the topics below:

A. **PROJECT DESCRIPTION:** Provide a brief and clear description of your proposed use of the City's Economic Development Fund, including a description of the specific public benefit to Nevada City including but not limited to: dates, time period, etc. (no more than 2 pages). Identify if your request is for a grant or sponsorship.

B. **PROGRAM PURPOSE:** Please describe how your proposed use of funds meets one or more of the following program goals:

- Promotion and marketing of Nevada City
- Support of community events
- Enhance education
- Improve aesthetics of a commercial area
- Improve the perception and/or practice of the City as business friendly

C. **SCHEDULE:** If applicable, provide a schedule indicating when funds will be needed.

CERTIFICATION: I certify the proposed use of City funds will only be used for what has been outlined in this application.

Signature _____ Date _____

Please print a copy for your records before you submit. Attach Narrative to submit email.

City of Nevada City

Community and Economic Support Program (CESP)

The City of Nevada City's Community and Economic Support Program (CESP) provides funding for special events, marketing activities or other economic development-related activities providing a public benefit to the City. The primary purpose of the Program is to provide sponsorships and grants that promote the City of Nevada City's commerce and increase business activity to help achieve the following goals:

- Promotion and marketing of Nevada City
- Support of community events
- Enhance education
- Improve aesthetics of a commercial area
- Improve the perception and/or practice of the City as business friendly

Applications will be accepted during the month of January. Awards will be made upon annual budget approval. The CESP will receive an annual allocation, established by the City Council. Any funds not used during the fiscal year will be returned to the General Fund. The City Council reserves the right to consider other non-timely applications should a need arise.

APPLICANT ELIGIBILITY

A. Eligible Applicants include the following:
    a. Business associations
    b. Individual businesses
    c. Non-profit organizations
    d. Nevada City Chamber of Commerce
    e. Economic-development related organizations or efforts that meet program goals
B. Ineligible Applicants:
    a. Individual residents
    b. Neighborhood associations

PROJECT ELIGIBILITY

A. Eligible Projects include, but are not limited to, the following:
    a. Event sponsorships
    b. Grants for marketing and promotion
    c. Studies to further economic development
    d. Economic development-related activities that promote program goals
B. Ineligible Projects include, but are not limited to, the following:
    a. General operation costs, including maintenance and payroll
    b. Cost of internal events, such as luncheons
    c. City membership dues
    d. Unpermitted events

APPLICATION PROCEDURES

A. By each January 1, the City shall provide notice on its website and announce at a public meeting a call for CESP proposals.
B. Applicant shall complete and submit the City's application by January 31.
C. City staff shall review and evaluate each application based on eligibility requirements and funding criteria.

D. City staff or City Council may request follow-up information from the applicant to complete evaluation of the application. Applicant shall provide the requested information by the date designated.
E. City Council shall prioritize funding requests based on funding availability and determine amount and number of awards as part of its annual budget adoption process.
F. Upon approval by the City Council, the Applicant shall submit to the City a Request for Funds.
G. Upon receipt of the Request for Funds, staff shall distribute the funds to the Applicant within ten (10) business days.

Part One – General Information

Organization Name:	**Project Name:**
Nevada City Chamber of Commerce	Nevada City Tree Tour
Address:	
Contact Person (Name/Title):	Cathy Whitt Hesey
Contact Email:	Cathy@nevadacitychamber.com
Contact Telephone:	(530) 265-2692
Website:	www.nevadacitychamber.com
Amount of Funding Requested:	$1,000

Part Two – Project Specifics

DIRECTIONS: Please prepare and attach a narrative of your proposed use of Community Economic Support Program funds that addresses each of the topics below:

A. **PROJECT DESCRIPTION:** Provide a brief and clear description of your proposed use of the City's Economic Development Fund, including a description of the specific public benefit to Nevada City including but not limited to: dates, time period, etc. (no more than 2 pages). Identify if your request is for a grant or sponsorship.

B. **PROGRAM PURPOSE:** Please describe how your proposed use of funds meets one or more of the following program goals:

- Promotion and marketing of Nevada City
- Support of community events
- Enhance education
- Improve aesthetics of a commercial area
- Improve the perception and/or practice of the City as business friendly

C. **SCHEDULE:** If applicable, provide a schedule indicating when funds will be needed.

CERTIFICATION: I certify the proposed use of City funds will only be used for what has been outlined in this application.

Cathy Whitt Hesey — Signature

3/30/18 — Date

Please print a copy for your records before you submit. Attach Narrative to submit email.

Nevada City Grant Request

Nevada City Heritage Tree Tour Map
Funding request: $1,000

Narrative

In 2008, a walking guide to the Trees of Nevada City was completed. This in depth guide provided a heritage tree map along with insights on the tree species, exact locations and numbered positioning on the sidewalks throughout town. The map was well received and in constant use. The original printed supply of the map is gone and the hard work already done was in danger of being lost.

New technology allowed the Nevada City Chamber of Commerce and associated volunteers to make the tree tour smartphone accessible in 2017. $2,659 was raised from private donations, grants and business sponsorships to complete the digital version of the map. Besides converting the map for smartphones, the walking path was re-confirmed and updated, along with securing the exact gps placement for each of the 40+ trees included on the tour. Additionally, artwork for a PDF which is downloadable was prepared and is now available online.

The Nevada City Tree Tour would like to print the updated Tree Tour Map, making the map available for immediate access by visitors. This handy map is ready to go the printers, only a small amount of funding is needed. One final clarification is also desired for the digital map: numbers for each pin drop on the map to make it easier to follow on smartphones.

This map has been a real asset to Nevada City's tourism, encouraging people to explore on foot and appreciate Nevada City's atmosphere and history. Large canopy trees are a significant contributor to greenhouse gas reduction. Nevada City's beautiful heritage trees are a precious environmental resource as well as a tourism asset. By cultivating appreciation, we help to be certain they are preserved.

Nevada City Heritage Tree Map Update:

Add numbers to digital map for easier walking directions: $620 (as quoted by Winter Street Design)
Print 5,000- 8.5" x 11" one color, 2 sides flat brochure $380 (as quoted by API Printing, Auburn)
Total request = $1,000

Map artwork PDF attached.

Nevada City Tree Tour

Welcome to the self-guided tree tour through downtown Nevada City. All trees may be viewed from a sidewalk or parking lot as indicated. Please respect private property, and be safe and courteous. Please be careful not to disturb the residents. Enjoy your walk. Visit the Nevada City Trees online map for more details on each of the trees included in the walking tour.

Tour 1

START facing the Chamber of Commerce, 132 Main Street. Walk uphill to the left of the Chamber of Commerce, turning onto Coyote Street.

1) Red Maple (Acer rubrum) Just past the Chamber of Commerce is a classic maple, with palmately veined leaves boasting brilliant red color in the fall. < *Cross Commercial Street and walk up Union Street, toward Broad Street.*>

2) On the corner of Union and Broad Streets is Calanan Park, established in the 1970's as a city park. On the right (north) side of the park is a Coast Redwood (Sequoia sempervirens) planted in 1927 and nicknamed "Calanan Red."

3) In the middle of the park is a Dogwood (Cornus).

4) Near the corner of Union and Broad Streets find a tall, erect White Fir (Abies concolor).

5) To the rear of the park is a Giant Sequoia (Seqouiadendron giganteum). Giant Sequoias are the largest trees in the world and are native to the Sierra Nevada.

6) Cypress (Cupressus) On the Broad Street side of the park is a multi-trunked cypress, a small to medium sized tree. < Turn right up Broad Street one block and turn left onto South Pine Street. Walk one block.>

7) Alongside the windowless brick telephone building at the corner of South Pine and Spring Streets, in a narrow planting bed, are three Italian Cypresses (Cupressus sempervirens 'Stricta'), native to Southern Europe. < *Continue down South Pine Street.*>

8) Just downhill of the three Italian cypresses, at the back corner of the telephone exchange building along South Pine Street, is a Deodar Cedar (Cedrus deodora).

9) At 220 South Pine Street grows a Southern Magnolia (Magnolia grandiflora). <*Walk about 15 yards out onto the Pine Street bridge and look to your right*>

10) Here is an Incense Cedar (Calocedrus decurrens), beautiful in its native surroundings. <*Retrace your steps and turn left on Spring Street. Continue along Spring Street to the driveway of the Miners Foundry, on your left.*>

11) Alongside the historic garage on the left is a mature stand of Tree of Heaven (Ailanthus altissima). <*Continue west on Spring Street*>

12) At 425 Spring Street is a large American Chestnut (Castanea dentata). < *Continue west on Spring Street to the intersection of Spring and Mill Streets.*>

13) In front of the second house down Mill Street stands a Common Catalpa (Catalpa bignoniodes). < *Walk back down Spring Street to the KVMR radio station. Turn left at KVMR and walk up to Broad Street. Cross and go uphill on Broad Street* >

14) In front of 414 Broad Street find the ever-opportunistic Tree of Heaven (Ailanthus altissima) growing out of a crack between the sidewalk and the building. < *Walk back down Broad Street about 30 feet and turn left into the parking lot next to The New York Shops. Walk through the parking lot to Commercial Street and turn left, uphill on Commercial Street, to the second driveway.*>

15) Across the street, between 416 and 420 Commercial Street, is a Colorado Spruce (Picea pungens), a tall forest tree with stiff, pointed needles. < *Cross Commercial Street and go downhill about 40 yards to the small Chinese Monument -- a beautiful little garden with an ever-flowing fountain located on the east side of the entrance to the municipal parking lot.*>

16) Toward the back right of the monument are three young Gingko trees (Ginkgo biloba), which will reach 50 to 80 feet.

17) Also within the Chinese Monument garden is a Japanese Black Pine (Pinus thunbergii). < *Walk about 75 yards downhill on Commercial Street and go into the private parking lot opposite the small theater at 305 Commercial Street. From the rear of this parking lot, look up at the large trees on the slope behind the parking lot.*>

18) The two tall trees on the hillside closest to the parking lot are Red Maple (Acer rubrum). < *Look downhill from the parking lot entrance, in the restaurant courtyard, for the tallest tree.*>

19) Native to the eastern United States, the Black Locust (Robinia pseudoacacia) has naturalized in California. < *From the parking lot go downhill on Commercial Street. Just past the restaurant entrance turn left and walk up North Pine Street about 30 feet to the back corner of the restaurant.*>

20) Goldenrain Tree, (Koelreuteria paniculata), named for the clusters of yellow flowers in late summer. < *Here ends TOUR 1.*>

Tour 2

Tour 2 START at the cafe located at 426 Broad Street.

21) In the courtyard of this cafe is a London Plane (Platanus x hispanica). < *Turn up Broad Street, cross Commercial and continue up toward Cottage Street. This part of Nevada City where Broad Street divides shows the quintessence of Nevada City, with beautiful California Victorian architecture on all sides and mature gardens with trees 80 to 120 years old.*>

22) In the front yard of 450 Broad Street, just left of the front walkway, grows a massive American Linden (Tilia americana).

23) In the same yard, near the front corner by Cottage Street, is a Black Walnut (Juglans nigra).

24) On the opposite corner across Cottage Street discover American Sweetgum (Liquidambar styraciflua). < *Turn to the right down Cottage toward North Pine.*>

25) At the corner of North Pine and Cottage Street is a mature Norway Maple (Acer platanoides), a European native. < *Walk up North Pine a few feet.*>

26) In the same yard is a Douglas Fir (Pseudotsuga menziesii) < *Continue along Cottage toward Main Street.*>

27) From alongside the school building look across Cottage Street at the small parking area for residents by the large apartment building. A tall, multi-trunked, Big Leaf Maple (Acer macrophyllum) stands at the rear left of that parking area along with a companion maple to the right.

28) The lone tall evergreen beside the school is a Juniper (Juniperus). Junipers are evergreen conifers. < *Continue on Cottage Street back toward North Pine Street.*>

29) At the first corner on the right, at the intersection of Cottage and School Streets, is a Raywood Ash (Fraxinus angustifolia 'Raywood'). < *Continue along Cottage Street to North Pine Street and go uphill to 549 North Pine* >

30) Directly across the street from 549 North Pine Street is a Monterey Pine (Pinus radiata).

31) At 551 North Pine is Mexican Washington Palm (Washingtonia robusta) < *Continue on North Pine Street to East Broad Street and stand at the NE corner of the intersection.*>

32) The large tree at 630 East Broad is a Tulip Tree (Liriodendron tulipifera). < *Turn left and follow East Broad Street.*>

33) At 541 East Broad Street we find a Crape Myrtle (Lagerstroemia indica). < *Continue to 520 East Broad Street.*>

34) On a street with many beautiful Dogwoods (Cornus) these three stand out. < *Proceeding carefully, cross from East Broad Street to West Broad Street near the narrow tip of the picket-fenced garden that separates those two streets.*>

35) Standing at the tip of this garden is a Silk Tree, commonly known as Mimosa, (Albizia julibrissin). < *Proceed uphill on West Broad Street for about 250 yards. At the intersection of West Broad Street and Spring Street, cross West Broad and go right on the dirt path you will see near the stop sign. This is the way into the historic Pioneer Cemetery where there is a grove of tall pines and oaks on a knoll above town. As you enter the old cemetery there is a plaque set in a large stone monument commemorating establishment of the cemetery in 1851.*>

The park-like setting of the cemetery is shaded with many Ponderosa Pines, (Pinus ponderosa) and Black Oaks (Quercus kelloggii), both California natives. It is lovely to see a half-wild setting so close to a city.

36) Ponderosa Pine is a three-needle pine, widely distributed throughout the foothills and mountains of the West and Canada.

37) The beautiful Black Oak (Quercus kelloggii). Black Oaks rarely exceed 100 feet tall in maturity.

38) About 30 feet past the stone monument commemorating the Pioneer Cemetery, along the fence on your left, is an Italian Cypress (Cupressus sempervirens). < *Leave the cemetery and cross the street.*>

39) Across from the cemetery at 627 West Broad, the tree with the white trunk is European White Birch (Betula pendula). < *Descend the hill toward town.*>

40) In front of 523 West Broad is a Cutleaf Birch (Betula pendula 'Dalecarlica'). < *Continue to 517 West Broad Street and stand at the corner of West Broad and Bennett Streets.*>

41) The pair of magnificent Blue Atlas Cedar trees (Cedrus atlantica) arching above the entrance to Bennet Street ideally suit the setting here. < *Cross Bennett Street to the historic Sargent House, 449 Broad Street.*>

The large yard of the Sargent House has many beautiful trees. Among them is a large Coast Redwood (Sequoia sempervirens) left of the Aaron Sargent plaque, and a multi-trunked Port Orford cedar (Chamaecyparis lawsoniana) about 20 feet behind and right of the redwood. The ranges of Coast redwood and Port Orford cedar overlap in northwestern California.

42) Hanging over the sidewalk to the right of the Aaron Sargent plaque are branches of an unusual tree, the Umbrella Pine (Sciadopilys verticillata). Native to Japan, it is not a true pine though it has cones. Its dark green needle-like leaves are arranged in distinctive whorls that resemble an umbrella. Evergreen

HERE ENDS OUR NEVADA CITY TREE TOUR

We hope you enjoyed the walk and learned a little about Nevada City's treasured trees!

Acknowledgements

The Nevada City Walking Tour of Trees Guide was developed by Friends of Trees Nevada County in 2008 and reproduced and edited under the supervision of the Nevada City Chamber of Commerce in 2017. Original arboricultural identification and narrative by Ellen Solomon, Randall Frizzell, and Roger McGehee; ecology and native trees by Chet Blackburn. Critical additions and edits for the 2017 text were generously contributed by Greg Archbald, Zeno Acton and Randall Frizzell. Pamela Biery, the 2008 map designer, managed the 2017 project update and digital implementation.

The production of the Nevada City Tree Tour has been supported by California ReLeaf, Pacific Gas & Electric, the Nevada City Chamber of Commerce, with the sponsorship of Acton Arboriculture, Inc., Byers LeafGuard, Gold Creek Inn B&B, Three Forks Bakery & Brewing Co., and GoFundMe.com donations. Thank you all sponsors and PG&E and California ReLeaf for your support.

Visit www.nevadacitychamber.com/nccc-trees for more information, including a Google Maps and Google Earth version of this tour. E-mail: nccctrees@gmail.com

APi-marketing

A DIVISION OF AUBURN PRINTERS INC

13020 Earhart Ave Auburn CA 95602 • 888-282-8764

Pamela Biery
Thumbler
Phone:

E-Mail pam.thumbler@gmail.com

3/30/18

QUOTE# 40227 Sales Rep: MERRILL

Thank you for the opportunity to quote you on your printing needs. Below are the prices based on "Print Ready File" supplied. Additional charges or deductions are listed below.
Please Don't hesitate to call us if you have any questions or corrections to this quote. This Estimate is good for 30 days and does not include sales tax

1,500	1/1 FLYER, 8.5 x 11 White 80# A/P Coated Book Gloss, Offset Printed, 1 colors front in PMS ink, 1 colors back in PMS ink	$ 175.63
2,500	1/1 FLYER, 8.5 x 11 White 80# A/P Coated Book Gloss, Offset Printed, 1 colors front in PMS ink, 1 colors back in PMS ink	$ 222.16
5,000	1/1 FLYER, 8.5 x 11 White 80# A/P Coated Book Gloss, Offset Printed, 1 colors front in PMS ink, 1 colors back in PMS ink	$ 324.03

Thank You!

Approval_____ Date_____ Quantity_____

Part One – General Information

Organization Name:	**Project Name:**
Nevada City Chamber of Commerce	Nevada City Bicycle Classic
Address:	
Contact Person (Name/Title):	Cathy Whittlesey, Executive Director
Contact Email:	cathy@nevadacitychamber.com
Contact Telephone:	(530) 265-2692
Website:	nevadacitychamber.com
Amount of Funding Requested:	$5,000

Part Two – Project Specifics

DIRECTIONS: Please prepare and attach a narrative of your proposed use of Community Economic Support Program funds that addresses each of the topics below:

A. **PROJECT DESCRIPTION:** Provide a brief and clear description of your proposed use of the City's Economic Development Fund, including a description of the specific public benefit to Nevada City including but not limited to: dates, time period, etc. (no more than 2 pages). Identify if your request is for a grant or sponsorship.

B. **PROGRAM PURPOSE:** Please describe how your proposed use of funds meets one or more of the following program goals:

- Promotion and marketing of Nevada City
- Support of community events
- Enhance education
- Improve aesthetics of a commercial area
- Improve the perception and/or practice of the City as business friendly

C. **SCHEDULE:** If applicable, provide a schedule indicating when funds will be needed.

CERTIFICATION: I certify the proposed use of City funds will only be used for what has been outlined in this application.

Cathy Whittlesey
Signature

3/21/18
Date

Please print a copy for your records before you submit. Attach Narrative to submit email.

There are changes to the 2018 Nevada City Bicycle Classic that should bring more spectators and riders to town. The Chamber plans to do more marketing this year by using social media (including Linkedin, Twitter and Facebook) blogging, target marketing, corporate sponsor contacts, local business and residents promotion, press releases, calendar of events, radio, street banner, newspaper, magazines and posters. Any money received from Nevada City will be used for promotion of the 58th annual Nevada City Bicycle Race. The City should consider this as a Sponsorship/Community Grant.

A Beloved Father's Day Tradition Since 1961...and a *New* Tradition in 2018

2018 marks the 58th anniversary of the Nevada City Cycling Classic, the second oldest continuously running bicycle race in the country. 2018 also marks year two of the revitalization of this iconic Nevada City event.

For only the second time in history, the Nevada City Classic will be moved off the traditional Father's Day date to the weekend of June 23-24, 2018. The date change allows the Chamber of Commerce to address a number of issues that were identified as factors to dwindling community support and engagement as well as falling racer/athlete participation numbers.

Not only has the date been changed, but also the course for 2018 will go back to the original that was designed by event founder Charlie Allert in 1961, and won by World Champions like Greg LeMond and many of the other top Pro/Am Cyclists from around the world.

Instead of riders going all the way to the bottom of Broad St., they will turn left onto N. Pine St., cross Commercial St. and proceed past the Courthouse and the relocated start/finish at N. Pine & Church streets before merging back to the course most people are familiar with at York & N. Pine streets.

This also lessens the financial burden on the Nevada City Public Works Dept, NCPD and NCFD while allowing open traffic flow to our lower Nevada City Merchants such as Three Forks Bakery and Brewing. We also shortened the course to accommodate any future Broad Street closures due to construction on the National Hotel.

2018 will continue to build on changes from 2017. The 2nd Annual Nevada City Mile running race that takes place on the same route as the bike race will be on Sunday as well. Saturday evening June 23rd will include an expanded edition of the 2nd annual Broad STREET Sprints: standing start, straight line, four riders at-a-time, head-to-head

all out battle up Broad St. This event will be combined with a brew fest type event and free live music immediately after the sprints finish…right on Broad St.

In 2019 we hope to add the annual Rotary Gold Country Challenge recreation Century Ride to the Nevada City Classic on Saturday. The Nevada City Classic is one of the largest and most iconic events of any type in Nevada County and has attracted more International Media Coverage than all other Nevada City/County events combined (with the exception of Victorian Christmas, which is comparable).

The Nevada City Classic goes beyond being "Just another Event". Time and time again we hear stories from current merchants, residents, visitors and more who were first exposed to Nevada City because of the Nevada City Classic, before eventually relocating here. As witnessed recently at the Celebration of Life for Dave Iorns, his daughter spoke about how she met the love of her life, now her husband, at the Nevada City Classic.

The reputation of the Nevada City Classic has not only attracted International media coverage, but is the sole reason the Amgen Tour of California was first attracted to Nevada City thorough their connection to Duane Strawser, and has returned three times, giving Nevada City its largest volume of media exposure ever

The Nevada City Chamber of Commerce is looking forward to Nevada City and the surrounding communities coming out to this all-inclusive, family friendly event weekend.

City of Nevada City

FY 2018/19 COMMUNITY ECONOMIC SUPPORT PROGRAM APPLICATION

Submit application to: Nevada City Hall
Attn. City Manager
317 Broad Street
Nevada City, CA 95959

PROCESS AND INSTRUCTIONS

The City of Nevada City established a Community Economic Support Program to provide funding for special events, marketing activities, or other economic development-related activities providing a public benefit to the City.

The primary purpose of the Program is to provide one-time sponsorships and grants that promote the City of Nevada City's commerce and increase business activity to help achieve the following goals:

- Promotion and marketing of Nevada City
- Support of community events
- Enhance education
- Improve aesthetics of a commercial area
- Improve the perception and/or practice of the City as business friendly

In almost all cases, the City's support of an outside organization should be considered a temporary or one-time commitment. Does your organization or event have a plan to become financially self-sustaining?

Applications will be accepted during the month of March 2018. Awards are anticipated to be made by July 1, 2018 upon annual budget approval for the July 1, 2018 to June 30, 2019 fiscal year. Based on prior year budget resources, it is anticipated the City will budget a total of $5,000 in Fiscal Year 2018/2019 for this program. Therefore, it is recommended that proposals target support of between **$250 and $1,000**.

Please note that submission of an application **is not a guarantee of funding**. Incomplete applications may be disqualified from consideration. The City reserves the right to request additional information within a prescribed time frame as part of its review process.

Please refer all questions regarding this application to Catrina Olson, City Manager, at (530) 265-2496, ext. 134 or Catrina.Olson@nevadacityca.gov.

Part One – General Information

Organization Name: THE FAMOUS MARCHING PRESIDENTS OF NEVADA CITY CALIFORNIA	**Project Name:** SARGENT/ 19th AMENDMENT
Address: PO BOX 1432 NEVADA CITY, CALIFORNIA 95959	
Contact Person (Name/Title):	BETH ANN WILSON VICE PRESIDENT
Contact Email:	5STARREALTY@PROTONMAIL.COM
Contact Telephone:	530.913.7697
Website:	FAMOUSMARCHINGPRESIDENTS.ORG
Amount of Funding Requested:	$1000.00 GRANT

Part Two – Project Specifics

DIRECTIONS: Please prepare and attach a narrative of your proposed use of Community Economic Support Program funds that addresses each of the topics below:

A. **PROJECT DESCRIPTION: Provide a brief and clear description of your proposed use of the City's Economic Development Fund, including a description of the specific public benefit to Nevada City including but not limited to: dates, time period, etc. (no more than 2 pages). Identify if your request is for a grant or sponsorship.**

B. **PROGRAM PURPOSE: Please describe how your proposed use of funds meets one or more of the following program goals:**

- **Promotion and marketing of Nevada City**
- **Support of community events**
- **Enhance education**
- **Improve aesthetics of a commercial area**
- **Improve the perception and/or practice of the City as business friendly**

C. **SCHEDULE: If applicable, provide a schedule indicating when funds will be needed.**

CERTIFICATION: I certify the proposed use of City funds will only be used for what has been outlined in this application.

David Parker
Signature

MARCH 26, 2018
Date

Please print a copy for your records before you submit. Attach Narrative to submit email.

The Famous Marching Presidents of Nevada City California

2018/19 Community Economic Support Program Application

A. **PROJECT DESCRIPTION:** In 2010 The Famous Marching Presidents of Nevada City California began the Sargent/19th Amendment Statue Project to honor Nevada City's direct connection to the right for Women to vote in America. This will be done by erecting a life size statue of Nevada City Pioneers Aaron and Ellen Clark Sargent. Aaron Sargent came from America's East Coast to Nevada City in 1850 and he asked Ellen to join him and she arrived in Nevada City in 1852. While raising their three children in Nevada City they both became nationally involved in the American Women's Sufferage Movement. Not only involved but leaders in the movement which found California Congressman Sargent submitting the 29 words to Congress that would become the 19th Amendment which was ratified in 1920. The Sargent Statue was commissioned to Internationally known artist Doug Van Howd in 2017. On August 18, 2020 which is the 100th birthday of the 19th Amendment the Famous Marching Presidents will unveil at the top of Broad Street.

B. **PROGRAM PURPOSE:** The Famous Marching Presidents are asking for a grant of $ 1000.00 to promote the Sargent/19th Amendment Statue Project. The grant will provide monies for logo/brochure design and printing of brochure. Brochure will describe the project and how individuals can participate in this Nevada City honor. Brochure will be mailed, handed out and at the Nevada City Chamber.

C. **Promotion and marketing of Nevada City:** This project put the spot light Nevada City's connection to Women's Rights in America.

D. **Support of community events:** This is a natural to be an attraction for the visitor and resident both.

E. **Enhance education:** The Sargent's story will be very educational.

F. **SCHEDULE: July 2018**

Correspondence forwarded from the Planning Commission

At the April 5, 2018 Special Planning Commission, the Commission was presented with several correspondence that expressed concern for medical cannabis businesses within the city overall. Because most of the concerns were not expressed for individual businesses, but rather for the nature of medical cannabis business, the Commission felt the City Council is the more appropriate body for consideration. Attached are those correspondence submitted:

- **Petition of business owners and employees: Disapproval of Medical Cannabis Businesses in Seven Hills Business District**

- **Correspondence regarding the Medical Cannabis Business ordinance from:**

  -Lisa Mueller & Jeremiah Theos

  -Bill Newton

  -Peter Morin

  -S. Reynolds email

To the Nevada City City Council

We the undersigned are requesting that the City Council refrain from issuing anymore licenses for cannabis dispensaries or cannabis related business's in the Seven Hills Business District for at least one year period of time in order to properly and accurately assess what impact the presence of these business's will have on our district.
Thank you for your attention to our concerns.

Name	Signature	Address
1. Joan McAnis Grisle	Joan Grisle	548 East Broad
2. Diane G. Nowland	Diane G Nowland	112 Orchard Nevada City
3. Terry Armor	[illegible]	525 Eskaton Cir GV. 95945
4. Shirley O. Dalton	Shirley O. Dalton	10292 Willow Valley Nevada City
5. Ruth Rutherford	Ruth Rutherford	Nevada City, CA 95959 11920 Banner Lava
6. Nicole Ruthierford	Nicole Rutherford	16905 Indian Flat RD Nevada City
7. Merilyn Skinner	Marilyn Skinner	Grass Valley
8. KAREN SECKINGTON	Karen Seckington	Nevada City
9.		
10.		

Thank You - Sue Downing 2656931

To the Nevada City City Council

We the undersigned are requesting that the City Council refrain from issuing anymore licenses for cannabis dispensaries or cannabis related business's in the Seven Hills Business District for at least one year period of time in order to properly and accurately assess what impact the presence of these business's will have on our district.
Thank you for your attention to our concerns.

Name	Signature	Address
1. Maureen D Beard	Maureen D. Beard	348 Clay St Nevada City
2. Carl M. Beard	Carl M. Beard	348 Clay St Nevada City
3. David Jones	David Jones	153 Rockwood Dr Grass Valley, CA
4. Yvonne Leever	Yvonne Leever	126 Windsor Ln G.V. Ca 9594
5. Gladys McWood	Gladys M. McWood	545 E. Broad NC 9595
6. Debra J Spangler	Debra J Spangler	54 Lost Hill C NC. 95959
7. Sylvia A. Brown	Sylvia A. Brown	11218 Vista Ave G.V 95945
8. PAT LANG	Pat Lang	20329 Chaparral Cir PV 95946
9. Selma Begg		Grass Valley
10. Connie Yates		Grass Valley

To the Nevada City City Council

We the undersigned are requesting that the City Council refrain from issuing anymore licenses for cannabis dispensaries or cannabis related business's in the Seven Hills Business District for at least one year period of time in order to properly and accurately assess what impact the presence of thes business's will have on our district.
Thank you for your attention to our concerns.

	Name	Signature	Address
1.	Karen Colwell	Karen Colwell	Nevada City
2.	Anne Angell	Anne Angell	Grass Valley
3.	Janet Gillett	Janet Gillett	Grass Valley
4.	T. Brett		Grass Valley
5.	Kelly Lapham	[illegible]	Nevada City
6.	Denise Koster	Denise Koster	Nevada City
7.	Denise Hovander	Denise Hovander	Nevada City
8.	Eric Jorgensen	[illegible]	Nevada City
9.	Frances J. Freedle	Frances J. Freedle	Grass Valley
10.	MICHAEL F FANUCCHI	[illegible]	GRASS VALLEY

moving

To the Nevada City City Council

We the undersigned are requesting that the City Council refrain from issuing anymore licenses for cannabis dispensaries or cannabis related business's in the Seven Hills Business District for at least one year period of time in order to properly and accurately assess what impact the presence of these business's will have on our district.
Thank you for your attention to our concerns.

Name	Signature	Address
1. Heather Zelle	Heather Zelle	100 Argall Way Nevada City CA 95959
2. Antoinette Regan	Antoinette Regan	Grass Valley
3. Jennifer Olson	Jennifer Olson	100 Argall Way
4. Dorothy A. Kari		Eshaton Village
5. Nancy Hamilton		Grass Valley
6. Linda Kluver		Grass Valley
7. Anne Padsit		Nevada City
8. Claudia Martin		Nevada City
9. Linda Marcus		Grass Valley-LM Nevada City-WK
10. Marylynne Olson		Nevada City

To the Nevada City City Council

We the undersigned are requesting that the City Council refrain from issuing anymore licenses for cannabis dispensaries or cannabis related business's in the Seven Hills Business District for at least a one year period of time in order to properly and accurately assess what impact the presence of these business's will have on our district.
Thank you for your attention to our concerns.

Name	Signature	Address
1. Mark Beaudreau	MARK BEAUDREAU	844 Nevada ST
2. CHARLES BEST	Charles Best	402 VALLEY ST.
3. John D. Baxley	John David Baxley	602-Long ST
4. Randolph Sirita	Randolph Sirita	12601 Jones Valley
5. MARGUERITE BAXLEY	Marguerite Baxley	602 LONG ST NC
6. LOGAN F DOWNING	Logan Downing	514 LONG ST N.C.
7. Julie A. McMANUS	Julie A. McManus	16183 Langley Ln Grass Valley, CA 95949
8. Amy Franssen	Amy Franssen	15978 Shannon Way NC
9. Kathleen Mathew	Kathleen Mathew	2611 Nevada City Hwy
10. Susanne Hinman	Susanne Hinman	17541 Shoshoni Trail Nevada City, CA 95959

To the Nevada City City Council

We the undersigned are requesting that the City Council refrain from issuing anymore licenses for cannabis dispensaries or cannabis related business's in the Seven Hills Business District for at least a one year period of time in order to properly and accurately assess what impact the presence of these business's will have on our district.
Thank you for your attention to our concerns.

Name	Signature	Address
1. GERALD RYBERG	Gerald Ryberg	501 Long St N.C.
2. Richard Eckenburg	Richard Eckenburg	350 Clay N.C. 95959
3. Josephine Eckenburg	Josephine Eckenburg	350 Clay St N.C. 9595
4. Jolane Romero	Jolane Romero	508 Long St, NC 9595
5. Robin Parisse	Robin Parisse	4 Galena NC 95959
6. ROGER SAVAGE	Roger Savage	231 NEVADA ST N.C 95959
7. Annette Wolters	Annette Wolters	204 Clay St. 95959
8. Matty Behr	Matty Behr	17044 Pine Peak Rd Grass Valley CA 95945
9. Carol White	Carol White	401 Winter St Nevada City CA 9595
10. Kristen O'Shea	Kristen O'Shea	150 Martin St, NC 95959

To the Nevada City City Council

We the undersigned are requesting that the City Council refrain from issuing anymore licenses for cannabis dispensaries or cannabis related business's in the Seven Hills Business District for at least a one year period of time in order to properly and accurately assess what impact the presence of these business's will have on our district.
Thank you for your attention to our concerns.

Name	Signature	Address
1. Don Davis	[illegible]	606 Long St, Nevada City 95959
2. Kevin Davis	[illegible]	606 Long St. Nevada City 9595
3. Georgine M Wasley	[illegible]	111 Uhlrath Ave NC
4. [illegible]	106 WALRATH AVE	NC
5. Juliet Tilly	Juliet Tilly	390 Clay St. Nevada City
6. Eric Tilly	[illegible]	390 Clay St. Nevada City 9595
7. Estelle D Stanton	Estelle D Stanton	113 Martin St NC 9595
8. STAN STANTON	Stan Stanton	113 Martin St. 9595
9. Bonila Valley	Bonila [illegible]	604 Long St, NC 9595
10. Ken La Valley	[illegible]	604 Long St, NC 9595

To the Nevada City City Council

We the undersigned are requesting that the City Council refrain from issuing anymore licenses for cannabis dispensaries or cannabis related business's in the Seven Hills Business District for at least a one year period of time in order to properly and accurately assess what impact the presence of these business's will have on our district.
Thank you for your attention to our concerns.

Name	Signature	Address
1. Nyla J. HADDY	Nylaj Haddy	215 Sacramento St Nevada City 95959
2. Nanette Kalman	Nanette Kalman	215 Sacramento St. Nevada City, CA 959
3. BARBARA House	Barbara House	10417 CEDARSONG RD NV CITY 9595
4. Stacey Dove	[illegible]	250 Woodpecker LN, NC 9595
5. Paula Bryan-Owen	[illegible]	215 Sacramento St. NC. 95959
6. Gina Byers	G. Byers	215 Sacramento St N.C. 95959
7. R. STEE		512 Long St. NC. 95959
8. Sam Diaz	[illegible]	505 Long St. NC 95959
9. John Carr	[illegible]	300 Adams St.
10. Maggie Carr		300 Adams St

To The Nevada City Council, Nevada City, California January 2018

We the undersigned business owners and employees do hereby register our disapproval to the Cannabis Businesses being proposed within the Seven Hills Business District.
We insist that you immediately discontinue any further movement to allow these businesses access to our neighborhood. We recognize the detriment to our livelihoods that will occur and protest in the strongest terms.

Signature	Printed Name	Phone #	Address
	Mark Vance	478-0776	221 Boulder St N.C.
	SUSAN DOWNING	2650931	105 ARGALL WAY NC
	Way Yum Sushi	2654300	570 Searls Ave
			105 Argall Way NC. 559-5441
	Angela K. Lux	530 272-2402	18175 Old Coach Way G
	Susan B. Reynolds	530 265-0216	523 Silva Ave NC
	Michelle Brown	530 263 3673	105 Argal Way NC. CA 95959
	CAROL ROSS	274-9703	327 HORIZON CIR GV 9594
	ALBERT PORTER	" "	" " " "
	Marilyn Skinner		10302 Dalewood Way GV
	NANCY LONG		12734 Friar Tuck Rd GV
	Peter Marin	Owner 570, 572 Searls 101, 103, 105, 107, 109,	Argall NC
	Julie Drennan	530-432 6821 Customer	12575 Black Rd Big Oak Valley CA 959
	Julie Bramlemp		500 Boulder ST. N.C

Music in the Mountains MIM

To The Nevada City Council, Nevada City, California January 2018

We the undersigned business owners and employees do hereby register our disapproval to the Cannabis Businesses being proposed within the Seven Hills Business District.

We insist that you immediately discontinue any further movement to allow these businesses access to our neighborhood. We recognize the detriment to our livelihoods that will occur and protest in the strongest terms.

Signature	Printed Name	Phone #	Address
Lillian R Harvey	Lillian R Harvey	5302653070	110 Argall
Lillian Rita Harvey Jr.	Lillian Rita Harvey	(530) 265-3070	110 Argall N.C. 959
Emily Blackston	Emily Blackston	530-478-0951	110 Argall Way N.C. 959
Kay Ryberg	Kay Ryberg	(530) 265-6544	112 Argall Way 9595,

To The Nevada City Council, Nevada City, California January 2018

We the undersigned business owners and employees do hereby register our disapproval to the Cannabis Businesses being proposed within the Seven Hills Business District.

We insist that you immediately discontinue any further movement to allow these businesses access to our neighborhood. We recognize the detriment to our livelihoods that will occur and protest in the strongest terms.

Signature	Printed Name	Phone #	Address
[illegible]	Ruth Franklin	265-0245	571 Searls Ave
[illegible]	Steve Taylor	263-0914	571 Searls Ave.
[illegible]	Austin Bennett	559-2696	16411 Oscar Dr
[illegible]	DALE M. FRANKLIN	265-0245	571 SEARLS
[illegible]	Mary F. Harper	265-0245	571 Searls
[illegible]	TOM NEWMARK	265-3848	571 SEARLS
[illegible]	Dorian Kurr	414 6588	571 Searls

To The Nevada City Council, Nevada City, California January 2018

We the undersigned business owners and employees do hereby register our disapproval to the Cannabis Businesses being proposed within the Seven Hills Business District.
We insist that you immediately discontinue any further movement to allow these businesses access to our neighborhood. We recognize the detriment to our livelihoods that will occur and protest in the strongest terms.

Signature	Printed Name	Phone #	Address
Teresa Lux	Teresa Lux	650-279-8286	634 Zion ST N.C.
Linda Marcus	Linda Marcus	477-6245	WK 105 A Pegall Wy N.C.
Carol Alvares	Carol Alvares	530-478-4645	10967 Alta Vista NC
[illegible]	Suzanne Gross	530-913-3158	1 Bowell Cabin Ct

To The Nevada City Council, Nevada City, California January 2018

We the undersigned business owners and employees do hereby register our disapproval to the Cannabis Businesses being proposed within the Seven Hills Business District.
We insist that you immediately discontinue any further movement to allow these businesses access to our neighborhood. We recognize the detriment to our livelihoods that will occur and protest in the strongest terms.

Signature	Printed Name	Phone #	Address
	Donald Racine	470-8300	870 Gold Flat Rd.
	Jonathan Harvey	470-8300	870 Gold Flat Rd
	Eileen Rouhani	470-8300	870 Gold Flat Rd
	Monika Brown	470-8300	870 Gold Flat Rd
	Brian MacDonald	470-8300	870 Gold Flat Rd.
	Jason White	265-4591	529 Scales Ave

To The Nevada City Council, Nevada City, California January 2018

We the undersigned business owners and employees do hereby register our disapproval to the Cannabis Businesses being proposed within the Seven Hills Business District.
We insist that you immediately discontinue any further movement to allow these businesses access to our neighborhood. We recognize the detriment to our livelihoods that will occur and protest in the strongest terms.

Signature	Printed Name	Phone #	Address
[illegible]	Dnanna Sutton	(530) 263-1755	208 Gold Flat Rd
Rachel Belende	Rachel Belende	(530) 273-8851	208 Gold Flat Rd

RECEIVED

MAY 10 2017

CITY OF NEVADA CITY

We do not want any cannabis businesses in Nevada City.

	Name-Print then sign	Address
1,	Dorothy Morgan	
2.	Elizabeth Young	10035 Bruning Rock Dr G.V
3.	Wayne Young	"
2 people → 4	John & Carol Ann DeBinse	13789 Ridgebrook Ln GV
2 people → 5	James & Lori Murray	12944 Red Dog Rd NC
2 people → 6.	Ron & Joanne Haines	
7.	Lorri Tarter	13305 Woodstock, NC 95959
8.	Jason Van Note	10761 Bartlett Dr. GV 95945
9.	Debra Jo Johnson	
10	Jeffery G. Hunter	
11	Lora I Esry	G.V.

Attachment 2.8

RECEIVED

MAY 10 2017

CITY OF NEVADA CITY

We do not want any cannabis businesses in Nevada City

Name-Print, then sign	Address (optional)
1. NANCY RENO MITCHELL Nancy Reno Mitchell	
2. Shirley A. Glenn Shirley A. Glenn	839 Morgan Ranch Dr Grass Valley, CA 95945
3 Linda S. Ogilvie Linda J. Ogilvie	15926 Samford Rd Grass Valley, CA 95949
4 Steve + K.T. Chesik	14862 HIDDEN ROCK DR. GRASS VALLEY, CA 95949
5 Yvette Rindels	21495 Canyon Way Colfax 95713
6 Pamela L Kirk Pamela L Kirk	
7 Jane Rounsaville JR	10080 Quartz mine place, GV 95949

Attachment 2.9

RECEIVED

MAY 10 2017

CITY OF NEVADA CITY

We do not want any cannabis businesses in Nevada City

	Name-Print then sign	Address
1,	Dorothy Morgan	
2.	Elizabeth Young	10035 Grinding Rock Dr G.V
3.	Wayne Young	"
2 people → 4	John & Carol Ann DeBiase	13789 Rickenbacker Ln GV
2 people → 5	James & Lori Murray	12944 Red Dog Rd NC
2 people → 6.	Ron & Joanne Haines	
7.	Lorri Tarter	13305 Woodstock, N.C. 95959
8.	Jason Van Note	10761 Bartlett Dr. GV 95945
9.	Debra Jo Johnson	
10	Jeffery G. Hunter	
11	Lora I Esry	G.V.

RECEIVED

MAY 10 2017

CITY OF NEVADA CITY

We do not want any cannabis businesses in Nevada City.

Name - Print, then sign	Address (optional)
1. Susan Reynolds Susan Reynolds	523 Silva Ave. Nevada City
2 Darrell Murphy (Darrell Murphy)	11851 Dawn Ln Grass Valley
3 Glenn W. Hall	R+R Ready mobile Park.
4 Patricia Cargile	Idaho Maryland - N. City
5 Amber Faltesauer	Summerhill Cir Fox Cou
6 Ruth Howard	Skyline Dr. G.V.
7 Don Baggett	11455 Mangon Dr. N.C.
8. Ida Locke-Reese	
9. William B Ogilvie II	15926 SANFORD RD. G.V. 95949
10 STAN HERUM	11059 THORNICROFT WAY

RECEIVED

MAY 10 2017

NEVADA CITY

We do not want any cannabis businesses in Nevada City.

	Name-Print, then sign	Address (optional)
1.	Jean Liggett - Jean Liggett	10095 Kenwood Dr. G.V
2.	Cynthia Frey - Cynthia Frey	G.V.
3.	Roberta Ann Teves Roberta Ann Teves	11711 Deer Park Dr. NC
4.	Jacinth Hepburn-Smith JHSmith	
5.	Dawn Brindley - Dawn Brindley	
6.	Camille Manning	
7.	Judy Mooney Judy Mooney	
8.	Charlene White Charlene White	
2 people → 9.	James & Deborah Phelps	
10.	Mary Pokorski MARY POKORSKI	
11.	Rebecca Brewer	14151 Meadow Dr. G.V 95945

To The Nevada City Council, Nevada City, California **January 2018**

We the undersigned business owners and employees do hereby register our disapproval to the Cannabis Businesses being proposed within the Seven Hills Business District.
We insist that you immediately discontinue any further movement to allow these businesses access to our neighborhood. We recognize the detriment to our livelihoods that will occur and protest in the strongest terms.

Signature	Printed Name	Phone #	Address
	Donald Racine	470-8300	870 Gold Flat Rd.
	Jonathan Harvey	470-8300	870 Gold Flat Rd
	Eileen Rouhani	470-8300	870 Gold Flat Rd
	Monika Brown	470-8300	870 Gold Flat Rd
	BRIAN MACDONALD	470-8300	870 GOLD FLAT RD.
	Jason White	265-4591	529 Scotts Ave

To The Nevada City Council, Nevada City, California **January 2018**

We the undersigned business owners and employees do hereby register our disapproval to the Cannabis Businesses being proposed within the Seven Hills Business District.
We insist that you immediately discontinue any further movement to allow these businesses access to our neighborhood. We recognize the detriment to our livelihoods that will occur and protest in the strongest terms.

Signature	Printed Name	Phone #	Address
[illegible]	Dianna Sutton	(530) 263-1755	208 Gold Flat Rd
Rachel Belender	Rachel Belender	(530) 273-8851	208 Gold Flat

To The Nevada City Council, Nevada City, California **January 2018**

We the undersigned business owners and employees do hereby register our disapproval to the Cannabis Businesses being proposed within the Seven Hills Business District.
We insist that you immediately discontinue any further movement to allow these businesses access to our neighborhood. We recognize the detriment to our livelihoods that will occur and protest in the strongest terms.

Signature	Printed Name	Phone #	Address
[illegible]	Ruth Franklin	265-0245	571 Searls Ave
[illegible]	Steve Taylor	263-0914	571 Searls Ave.
[illegible]	Austin Bennett	559-2696	16911 Oscar Dr
[illegible]	DALE M. FRANKLIN	265-0245	571 SEARLS
[illegible]	Mary F. Harper	265-0245	571 Searls
[illegible]	TOM NEWMARK	265-3848	571 SEARLS
[illegible]	Dorian Kurr	414 6588	571 Searls

To The Nevada City Council, Nevada City, California **January 2018**

We the undersigned business owners and employees do hereby register our disapproval to the Cannabis Businesses being proposed within the Seven Hills Business District.
We insist that you immediately discontinue any further movement to allow these businesses access to our neighborhood. We recognize the detriment to our livelihoods that will occur and protest in the strongest terms.

Signature	Printed Name	Phone #	Address
Teresa Lux	Teresa Lux	650-279-8286	634 Zion ST N.C.
Linda Marcus	LINDA MARCUS	477-6245	WK 105 A EGALL WY N.C.
Carol Alvares	Carol Alvares	530-478-9643	10967 Aldie NC
[illegible]	SUZANNE GLASS	530-913-3158	14300 Wolf Creek Ln GL

To The Nevada City Council, Nevada City, California **January 2018**

We the undersigned business owners and employees do hereby register our disapproval to the Cannabis Businesses being proposed within the Seven Hills Business District.
We insist that you immediately discontinue any further movement to allow these businesses access to our neighborhood. We recognize the detriment to our livelihoods that will occur and protest in the strongest terms.

Signature	Printed Name	Phone #	Address
	Mark Vance	478-0776	221 Boulder ST N.C.
	SUSAN DOWNING	2656931	105 ARGAL WAY NC
	Way Yun Sosli	2654300	570 Searls Ave
			105 Argal Way NC. 559-5441
	Angela K. Lux	530 272-2402	18175 Old Coach Wy. G
	Susan B. Reynolds	530 265-0216	523 Silva Ave NC
	Michelle Brown	530 263 3673	105 Argal Way NC. CA 95959
	CAROL ROSS	274-9703	327 HORIZON CIR GV 9594
	ALBERT PORTER	" " " " " "	
	Marilyn Skinner		10302 Dalewood Wa GV
	NANCY LONG		12734 Friar Tuck Rd GV
	Peter Morin		Owner 570, 572 Searls 101, 103, 105, 107, 109, Argall NC
	Julie Drennan	530-432 6821	Customer 12575 Black Rd Big Oak Valley CA 95911
	Julie Bramkamp		510 Boulder ST. N.C.

(Music in the Mountains MIM)

To The Nevada City Council, Nevada City, California **January 2018**

We the undersigned business owners and employees do hereby register our disapproval to the Cannabis Businesses being proposed within the Seven Hills Business District.
We insist that you immediately discontinue any further movement to allow these businesses access to our neighborhood. We recognize the detriment to our livelihoods that will occur and protest in the strongest terms.

Signature	Printed Name	Phone #	Address
Lillian R Harvey	Lillian R Harvey	5302653070	110 Argall W
Lillian Rita Harvey Jr.	Lillian Rita Harvey	(530) 265-3070	110 Argall W N.C. 959
Emily Blackston	Emily Blackston	530-478-0951	110 Argall way N.C. 959
Kay Ryberg	Kay Ryberg	(530) 265-8844	112 Argall Way 9595,

RECEIVED
JAN 21
NEVADA CITY

To The Nevada City Council, Nevada City, California **January 2018**

We the undersigned business owners and employees do hereby register our disapproval to the Cannabis Businesses being proposed within the Seven Hills Business District.

We insist that you immediately discontinue any further movement to allow these businesses access to our neighborhood. We recognize the detriment to our livelihoods that will occur and protest in the strongest terms.

Signature	Printed Name	Phone #	Address
	FRANK X. PFAFFINGER	(530)265-3911	NEVADA CITY SHOE REPAIR 117 ARGALL WY NC 95959
	Jamee Iorns	530 263-2405	THE TWIST 100 argall way NC 95959
	Tony Reynn	530 478 1412	Kuk Soo Won 127 Argall Way NC
	Ross Hart	530 913 0997	ALL SEASON AWARDS 102A Argall Way
	(NON PROFIT) - AGAINST! but CAN'T SIGN!		SIERRA SERVICES FOR THE BEND 546 SEARLES
	Chalice Barney	913-9484	271 SUGAR SHACK Argall Wy NC 9599
	LAURA Bishop	265-2690	LAURA BISHOP DANCE STUDIO 540 SEARLES Ave, NC.
	LINDY BEATIE	477.8485	PO BOX 360 Rough & Ready concerned citizen + work w/children

To The Nevada City Council, Nevada City, California January 2018

We the undersigned business owners and employees do hereby register our disapproval to the Cannabis Businesses being proposed within the Seven Hills Business District.
We insist that you immediately discontinue any further movement to allow these businesses access to our neighborhood. We recognize the detriment to our livelihoods that will occur and protest in the strongest terms.

Signature	Printed Name	Phone #	Address
	Donald Racine	470-8300	870 Gold Flat Rd.
	Jonathan Harvey	470-8300	870 Gold Flat Rd
	Eileen Rouhani	470-8300	870 Gold Flat Rd
	Monika Brown	470-8300	870 Gold Flat Rd
	Brian MacDonald	470-8300	870 GOLD FLAT RD.
	Jason White	265 4591	529 Searls Ave

To The Nevada City Council, Nevada City, California January 2018

We the undersigned business owners and employees do hereby register our disapproval to the Cannabis Businesses being proposed within the Seven Hills Business District.
We insist that you immediately discontinue any further movement to allow these businesses access to our neighborhood. We recognize the detriment to our livelihoods that will occur and protest in the strongest terms.

Signature	Printed Name	Phone #	Address
[illegible]	Dianna Sutton	(530) 263-1755	208 Gold Flat Rd
Rachel Belendez	Rachel Belendez	(530) 273-8851	208 Gold Flat

To The Nevada City Council, Nevada City, California January 2018

We the undersigned business owners and employees do hereby register our disapproval to the Cannabis Businesses being proposed within the Seven Hills Business District.
We insist that you immediately discontinue any further movement to allow these businesses access to our neighborhood. We recognize the detriment to our livelihoods that will occur and protest in the strongest terms.

Signature	Printed Name	Phone #	Address
Ruth Franklin	Ruth Franklin	265-0245	571 Searls Ave
[illegible]	Steve Taylor	263-0914	571 Searls Ave.
[illegible]	Austin Bennett	559-2696	16411 Oscar Dr
Dale M. Franklin	DALE M. FRANKLIN	265-0245	571 SEARLS
Mary F. Harper	Mary F. Harper	265-0245	571 Searls
Tom Newmark	TOM NEWMARK	265-3848	571 SEARLS
[illegible]	Dorian Kurr	414 6588	571 Searls

To The Nevada City Council, Nevada City, California January 2018

We the undersigned business owners and employees do hereby register our disapproval to the Cannabis Businesses being proposed within the Seven Hills Business District.
We insist that you immediately discontinue any further movement to allow these businesses access to our neighborhood. We recognize the detriment to our livelihoods that will occur and protest in the strongest terms.

Signature	Printed Name	Phone #	Address
Teresa Lux	Teresa Lux	650-279-8286	634 Zion ST N.C.
Linda Marcus	LINDA MARCUS	477-6245	WK 105 ARGALL WY N.C.
Carol Alvares	Carol Alvares	530-478-9643	10967 Alta Vista NC
[illegible]	SUZANNE GLASS	530-913-3158	14 Blowell Cabin Ct

To The Nevada City Council, Nevada City, California **January 2018**

We the undersigned business owners and employees do hereby register our disapproval to the Cannabis Businesses being proposed within the Seven Hills Business District.
We insist that you immediately discontinue any further movement to allow these businesses access to our neighborhood. We recognize the detriment to our livelihoods that will occur and protest in the strongest terms.

Signature	Printed Name	Phone #	Address
	Mark Vance	478-0776	221 Boulder ST N.C.
	SUSAN DOWNING	265 6931	105 ARGAL WAY NC
	Way Yun Susli	265 4300	570 Searls Ave
			105 Argal Way NC. 559-5441
	Angela K. Lux	530 272-2402	18175 Old Coach Way G
	Susan B. Reynolds	530 265-0216	523 Silva Ave NC
	Michelle Brown	530 263-3673	165 Argal Way NC. CA 95959
	CAROL ROSS	274-9703	327 HORIZON CIR GV 9594
	ALBERT PORTER	"	" " " " "
	Marilyn Skinner		10302 Dalewood Wa GV
	NANCY LONG		12734 Friar Tuck Rd GV
	Peter Morin		Owner 570, 572 Searls 101, 103, 105, 107, 109, Argall NC
	JULIE DRENNAN	530-432 6321	12575 Black Rd Customer Big Oak Valley CA 95959
	Julie Bramlemp		500 Boulder ST. N.C

Music in the Mountains MIM

To The Nevada City Council, Nevada City, California January 2018

We the undersigned business owners and employees do hereby register our disapproval to the Cannabis Businesses being proposed within the Seven Hills Business District.
We insist that you immediately discontinue any further movement to allow these businesses access to our neighborhood. We recognize the detriment to our livelihoods that will occur and protest in the strongest terms.

Signature	Printed Name	Phone #	Address
Lillian R Harvey	Lillian R Harvey	5302653070	110 Argall Way
Lillian Rita Harvey Jr.	Lillian Rita Harvey	(530) 265-3070	110 Argall Way N.C. 959
Emily Blackston	Emily Blackston	530-478-0951	110 Argall way N.C. 959
Kay Ryberg	Kay Ryberg	(530) 265-8844	112 Argall Way 9595,

To The Nevada City Council, Nevada City, California January 2018

We the undersigned business owners and employees do hereby register our disapproval to the Cannabis Businesses being proposed within the Seven Hills Business District.
We insist that you immediately discontinue any further movement to allow these businesses access to our neighborhood. We recognize the detriment to our livelihoods that will occur and protest in the strongest terms.

Signature	Printed Name	Phone #	Address
	Donald Racine	470-8300	870 Gold Flat Rd.
	Jonathan Harvey	470-8300	870 Gold Flat Rd
	Eileen Rouhani	470-8300	870 Gold Flat Rd
	Monika Brown	470-8300	870 Gold Flat Rd
	Brian MacDonald	470-8300	870 GOLD FLAT RD.
	Jason White	265-4591	529 Searls Ave

To The Nevada City Council, Nevada City, California January 2018

We the undersigned business owners and employees do hereby register our disapproval to the Cannabis Businesses being proposed within the Seven Hills Business District.
We insist that you immediately discontinue any further movement to allow these businesses access to our neighborhood. We recognize the detriment to our livelihoods that will occur and protest in the strongest terms.

Signature	Printed Name	Phone #	Address
[illegible]	Dnanna Sutton	(530) 263-1755	208 Gold Flat Rd
Rachel Belende	Rachel Belende	(530) 273-8851	208 Gold Flat Rd

To The Nevada City Council, Nevada City, California January 2018

We the undersigned business owners and employees do hereby register our disapproval to the Cannabis Businesses being proposed within the Seven Hills Business District.
We insist that you immediately discontinue any further movement to allow these businesses access to our neighborhood. We recognize the detriment to our livelihoods that will occur and protest in the strongest terms.

Signature	Printed Name	Phone #	Address
	Ruth Franklin	265-0245	571 Searls Ave
	Steve Taylor	263-0914	571 Searls Ave.
	Austin Bennett	559-2696	16411 Oscar Dr
	DALE M. FRANKLIN	265-0245	571 SEARLS
	Mary F. Harper	265-0245	571 Searls
	TOM NEWMARK	265-3848	571 SEARLS
	Dorian Kurr	414 6588	571 Searls

To The Nevada City Council, Nevada City, California January 2018

We the undersigned business owners and employees do hereby register our disapproval to the Cannabis Businesses being proposed within the Seven Hills Business District.
We insist that you immediately discontinue any further movement to allow these businesses access to our neighborhood. We recognize the detriment to our livelihoods that will occur and protest in the strongest terms.

Signature	Printed Name	Phone #	Address
[illegible]	Teresa Lux	650-279-8286	634 Zion ST N.C.
[illegible]	Linda Marcus	477-6245	WK 105 A EGALL WY N.C.
Carol Alvares	Carol Alvares	530-478-4645	10967 Atolia NC
[illegible]	Suzanne Gross	530-913-3158	1 Brown Cabin Ct

To The Nevada City Council, Nevada City, California January 2018

We the undersigned business owners and employees do hereby register our disapproval to the Cannabis Businesses being proposed within the Seven Hills Business District.
We insist that you immediately discontinue any further movement to allow these businesses access to our neighborhood. We recognize the detriment to our livelihoods that will occur and protest in the strongest terms.

Signature	Printed Name	Phone #	Address
	Mark Vance	478-0776	221 Boulder St N.C.
	SUSAN DOWNING	2656931	105 ARGAL WAY NC
	Way Yun Susi	2654300	570 Searls Ave
			105 Argal Way NC. 559-5441
	Angela K. Lux	530 272-2402	18175 Old Coach Wy. G
	Susan B. Reynolds	530 265-0216	523 Silva Ave NC
	Michelle Brown	530 263 3673	105 Argal Way NC. CA 95959
	CAROL ROSS	274-9703	327 HORIZON CIR GV 9594
	ALBERT PORTER	" "	" " " "
	Marilyn Skinner		10302 Dalewood Wa GV
	NANCY LONG		13734 Friar Tuck Rd GV
	Peter Marin		Owner 570, 572 Searls 101, 103, 105, 107, 109, Argall, NC
	Julie Drennan	530-432 6821	12575 Black Rd Big Oak Valley CA 95954
	Julie Bramkamp		500 Boulder St. N.C

Music in the Mountains MIM

To The Nevada City Council, Nevada City, California January 2018

We the undersigned business owners and employees do hereby register our disapproval to the Cannabis Businesses being proposed within the Seven Hills Business District.

We insist that you immediately discontinue any further movement to allow these businesses access to our neighborhood. We recognize the detriment to our livelihoods that will occur and protest in the strongest terms.

Signature	Printed Name	Phone #	Address
Lillian R Harvey	Lillian R Harvey	5302653070	110 Argyll Way
Lillian Rita Harvey Jr.	Lillian Rita Harvey	(530) 265-3070	110 Argall N.C. 959
Emily Blackston	Emily Blackston	530-478-0951	110 Argall way N.C. 959
Kay Ryberg	Kay Ryberg	(530) 265-4844	112 Argyll Way 9595,

Attachment 2.9

RECEIVED

MAY 10 2017

CITY OF NEVADA CITY

We do not want any cannabis businesses in Nevada City.

	Name-Print then sign	Address
1,	Dorothy Morgan	
2.	Elizabeth Young	10035 Grinding Rock Dr G.V
3.	Wayne Young	
2 people → 4	John & Carol Ann DeBinse	13789 Rickenbacker Ln GV
2 people → 5	James & Lori Murray	12944 Red Dog Rd NC
2 people → 6.	Ron & Joanne Haines	
7.	Lorri Tarter	13305 Woodstock, NC 95959
8.	Jason Van Note	10761 Bartlett Dr. GV 95945
9.	Deborah Johnson	
10	Jeffery G. Hunter	
11	Lora I Esry	G.V.

Attachment 2.8

RECEIVED

MAY 10 2017

CITY OF NEVADA CITY

We do not want any cannabis businesses in Nevada City

Name-Print, then sign	Address (optional)
1. NANCY RENO MITCHELL Nancy Reno Mitchell	
2. Shirley A. Glenn Shirley A. Glenn	859 Morgan Ranch Dr Grass Valley, CA 95945
3 Linda S. Ogilvie Linda J. Ogilvie	15926 Sanford Rd Grass Valley, CA 95949
4 Steve + K.T. Chalik	14862 HIDDEN ROCK DR. GRASS VALLEY, Ca 95949
5 Yvette Rindels	21495 Canyon Way, Colfax 95713
6 Pamela L Kirk Pamela L Kirk	
7 Jane Rounsaville JR	10080 QUARTZ mine place, GV 95949

Attachment 2.9

RECEIVED

MAY 10 2017

CITY OF NEVADA CITY

We do not want any cannabis businesses in Nevada City.

	Name-Print then sign	Address
1,	Dorothy Morgan	
2.	Elizabeth Young	10035 Grinding Rock Dr G.V
3.	Wayne Young	"
2 people → 4	John & Carol Ann DeBirse	13789 Rickabock Ln GV
2 people → 5	James & Lori Murray	12944 Red Dog Rd NC
2 people → 6.	Ron + Joanne Haines	
7.	Lorri Tarter	13305 Woodstock, N.C. 95959
8.	Jason Van Note	10761 Bartlett Dr. G.V 95945
9.	Debra Jo Johnson	
10	Jeffery G. Hunter	
11	Lora I Esry	G.V.

RECEIVED Attachment 2.10

MAY 10 2017

CITY OF NEVADA CITY

We do not want any cannabis businesses in Nevada City.

Name - Print, then sign	Address (optional)
1. Susan Reynolds Susan Reynolds	523 Silva Ave. Nevada City
2 Darrell Murphy (Darrell Murphy)	11851 Nancy Ln Grass Valley
3 Glenn W. Hobb	R+Ready mobile Park.
4 Patricia Cargile	Idaho Maryland - N. City
5 Amber Faltersack	Sunnyside Cul Fay Co
6 Kurt Howard	SKYLINE DR. GV.
7 Don Baggett	11455 Mason Dr. N.C.
8. Ida Locke-Reese	
9. William B Ogilvie II	15926 SANFORD RD. G.V. 95949
10 SITAN HERUM	11059 THORNICROFT WAY

Attachment 2.11

RECEIVED

MAY 10 2017

CITY OF NEVADA CITY

We do not want any cannabis businesses in Nevada City.

	Name-Print, then sign	Address (optional)
1.	Jean Liggett - Jean Liggett	10095 Kenwood Dr. G.V
2	Cynthia Frey - Cynthia Frey	G.V.
3	Roberta Ann Teves Roberta Ann Teves	11711 Deer Park Dr. Ne
4	Jacinth Hepburn-Smith	
5.	Dawn Brindley - Dawn Brindley	
6	Camelle Mayo	
7	Judy Mooney Judy Mooney	
8	Charlene White Charlene White	
2 people → 9	James & Deborah Phelps	
10	Mary Pokorski MARY POKORSKI	
11.	Rebecca Brewer	14151 Meadow Dr. G.V. 95945

Dear City Planner and Planning Commission,

I am glad it was brought to my attention a marijuana business is applying to be permitted in my neighborhood and that I am given the opportunity to voice my concerns. My husband and I are planning on attending the meeting unless our business interferes. I prefer not to speak at the meeting and would prefer to send my concerns in writing. I am not completely in opposition but definitely have concerns on how it will impact my neighborhood. We have a school and a drug recovery facility which seems odd to be in the same area as a marijuana manufacturing business. I feel the parents of those school children should have a voice too as that school has been established in this area.

Here is a list of concerns-

1. Visible signs for business- What will their business signs be? Will they be to advertise? (large and easily read by car traffic or small and only noticeable on foot) There is still a lot of negative association with marijuana. There is a children's school down the street and although it is not within setbacks, children will pass by that location. The campground has visitors from other towns, will this have a negative effect on the reputation of our small town?
2. Odors from extraction or baking- how are we assured there will be no odors emitted into the air during their processes? If they break regulations, what is the process to have them shut down and how long would that take? Who do we contact to make complaints?
3. Increased theft/vandalism in the neighborhood? How will their security system keep/ deter break ins? If they have repeated burglaries, will they be shut down? I worked at local pharmacies that had break ins despite security systems. It's not just the marijuana product but the expectation that these businesses might operate primarily in cash. Current banking regulations are causing problems for this industry so traditional checking accounts might not be used.
4. Employees- will all their employees be required to fill out a W4 and Employment Eligibility Verification? Everyone knows there is a problem with trimmigrants in our community. How do we know these companies will not employee those type of workers? The same type that end up sleeping in empty parking lots. This IS happening- look at North San Juan

during trim season. They camp out in the parking lot across from the bar. Or Railroad Ave in Nevada City where people park vans, campers, cars and sleep in them. Tri-Counties bank has a problem with homeless sleeping in their parking lot. Maybe this is a ridiculous concern but it's hard to disassociate current marijuana business models with ones that follow state rules because there is nothing to compare it to.

5. What will they bring to our community? How will they be good neighbors? How much projected tax revenue will the city see?
6. Can we be assured they will NEVER be allowed to apply to have retail sales on site? How do we know in a few years from now, if they will be granted permission to have a retail store? This is a HUGE concern for us. We do not want to have a dispensary in our neighborhood.
7. Waste/garbage- How will waste from the facility be handled? Will there be a dumpster outside the building that might make people curious? I imagine there is strict protocol by the state on how it is to be handled- but who enforces it? Will the city over see that regulations are being followed?
8. How will their self-distribution operate? Will retail companies pick up their orders? Will they be shipped from the facility? Basically, will we see an increase in vehicle traffic? Many marijuana dispensaries operate out of a vehicle- there is no store front. An order is placed by phone or online, and delivered to the individual. Will this type of self-distribution be used?
9. Why not have this type of business in an area that is not mixed use? There are so many residential homes in this neighborhood.
10. Are there any hazards in ethanol extraction like with butane?
11. Lastly, I ask each member on the board to honestly answer if they would want this business in their neighborhood? If yes- why are you not concerned (reassure us that it will not negatively impact us). If no- please stop it from happening. Wait until the county passes regulations to allow this sort of business in an area that has more manufacturing businesses- like by the airport. Not next to a children's school.

Thank you for taking the time to read about our concerns.

Sincerely,
Lisa Mueller and Jeremiah Theos &
Neighbors

2-6-18

To: Nevada City Council and Administration

From: Bill Newton, resident and property owner

Subj: Opinions

I agree with much of what was stated in Mr. Boardman's column in the February 5, 2018 issue of the Union. The following are my opinions and I thank you for reading them.

1. Nevada City a town of under 3000 population doesn't need more than one medical marijuana dispensary and no other grow facilities within the City limits. This City does not need to become the Pot Mecca of the Foothills.
2. Please rethink your plan to refund grower fees for crop failures. The City is not in the insurance business. This would not be a good overall plan for the City.
3. A Grand Jury investigation as suggested by one council member might be necessary to look into possible Council violations in the current and past years. The Jury could look into this current marijuana issue, water and sewer rates, accounting practices, and maintenance. The public might have more confidence in the Council's ability to do its work in a correct legal manner. Mr. Boardman's column hinted that might not be the case.
4. I feel the Council spends too much time discussing homeless issues and affordable housing issue without defining either. Therefore, no acceptable solutions have been approved. We do not know who and why homeless people are living in Nevada County and what is there personal situation. We also don't know how to tackle the affordable housing situation without ruining the market value of the houses all ready in the City. The companies proposing little houses are in it for the money. Not looking at the little house developing equity over a period of time for the home owner.
5. In my opinion more Council's time should be spent on providing services for all citizens including property tax-paying citizens. Examples include but not limited to: balancing the budget, fire prevention yard waste cleanup, police services, street and sidewalk repairs, city wide events, parks and recreations, following city ordinances, and honoring your oath and commitment to obey the laws of the USA as a Council member.

Sincerely,

Bill Newton

Bill Newton
300 Nihell Street
Nevada City, CA

From: peter morin [mailto:petemor@gmail.com]
Sent: Thursday, February 8, 2018 2:48 PM
To: Amy Wolfson <Amy.Wolfson@nevadacityca.gov>; duanestrawser@gmail.com
Subject: Cannabis letter from Peter Morin regarding the new ordinance

Hello Amy and Duane,

I regret that I will not be able to attend the city council or planning commission meetings this month. I made prior commitments to travel out of the country leaving the evening of the February 13th and returning late on the 28th. However I do hope that I can have the pertinent part of my email read, and submitted at the meetings. Your advice in this process will be greatly appreciated!

My name is Peter Morin and I own the commercial property located at 101 through 109 Argall Way, and the adjoining property at 570, and 572 Searls Ave, Nevada City CA. For the record, I do not oppose a limited number of cannabis related businesses operating in my area, two or three at most, and would expect the City Council and the Planning Commission to use good judgement in the application of the new ordinance. So I was shocked when I heard that not only were there three cannabis businesses already licensed to operate but as many as seven more applications being processed with the expectations of having their businesses permitted and licenses approved and opened in the coming year.

It states in the ordinance and I quote " Nothing in this chapter creates a mandate that the Planning Commission or the City Council must issue one or more medical cannabis business permits to a medical cannabis cultivator, manufacturer, distributor, transporter, or testing laboratory if the Planning Commission or the City Council determines that there are no qualified applicants, the proposed locations for the medical cannabis businesses are incompatible with neighborhood land uses, or if the Planning Commission or the City Council determines that the issuance of a medical cannabis business permit would have a negative affect on the health, safety, or welfare of the citizens or businesses of Nevada city, or for any other reason allowed by the law." Therefore, it would seem only prudent, and responsible to consider the citizens, and existing businesses of the 7 Hills Business District, and to ere on the side of caution and move slowly in this process. To go from having zero cannabis businesses to having ten or more in Nevada City would be irresponsible and bring into question the judgement of the planning commission and the city council.

Based on my observation of the investment that some of these businesses are making, it would appear that there are expectations for considerable profit. I just hope that the planning commission and city council are not

putting profit before people and the well being of the community of Nevada City.

Thank you, Peter Morin

Subject: The definition online is CBD does not get you high, it is only medicine
Dear Planning
I would appreciate your posting this email as a public comment for Planning Commission meeting Thursday this week. I am sorry I will unable to attend.

> My basic question is — Is it the intention of the Nevada City cannabis
> ordinances to clearly state that the cannabis products manufactured
> and distributed by Nevada City cannabis businesses be solely products
> for/to medical dispensaries? (That is my understanding). If so, what
> is the procedure set in place that Nevada City will use to assure that
> these businesses comply.
>
> My other questions pertains specifically to the prospective cannabis
> business that deals with edible bars labeled "Get lit to be fit".

> Isn't the CBD label all about NOT getting high and just about
> "medicine"? Please explain this slogan shown on the bar online in your
> business application.
> Does California state law say that each bar has to be labeled that it
> contains cannabis or just the outside packaging of these bars?
> (the one pictured has no mention that it contains cannabis) My concern
> of course is that this bright, attractively wrapped bar, as pictured,
> does not say anything about containing cannabis, yet will be very
> attractive to kids or other unsuspecting persons.

Thank you for including the petitions and comments from the community in the packet for the upcoming Planning Commission meeting. Please continue to include them in each Planning Commission packet when cannabis issues arise. Those citizens of Nevada City who are not intentionally involved in cannabis businesses choose to voice our opinions in written form; those who are intentionally involved in cannabis businesses choose to voice their opinions in verbal form in person. Both forms of communication are valid and deserve to be honored, and used, when decisions are made. To this end, I am requesting that the Planning Commission start mentioning this fact at every meeting.

Thank you,
Susan Reynolds