City of Nevada City

PLANNING COMMISSION AGENDA ***REVISED***
THURSDAY, JANUARY 16, 2020 1:30 PM
Council Chambers – City Hall
317 Broad Street - Nevada City, CA 95959

•AUDIENCE MEMBERS DESIRING TO ADDRESS THE PLANNING COMMISSION ON ITEMS ON THE AGENDA: After recognition by the Chair, state your name, address and your comments or questions. Please direct your remarks to the Commission. So that all interested parties may speak, please limit your comments to the item under discussion. All citizens will be given the opportunity to speak, consistent with Constitutional rights. Time limits are at the discretion of the Chair. **•If you challenge** the Commission's decision on any matter in court, you will be limited to raising only those issues you or someone else specifically raised or delivered in writing to the Planning Commission at or prior to the meeting. **•Requests for disability-related modifications or accommodations** may be made by contacting the City Planner and should be made at least 72 hours prior to the meeting.

Mission Statement
The City of Nevada City is dedicated to preserving and enhancing its small town character and historical architecture while providing quality public services for our current and future residents, businesses and visitors.

PLEDGE OF ALLEGIANCE

ROLL CALL Chair Josie Andrews, Vice-Chair Jason Rainey Commissioners, Peter Van Zant, Stuart Lauters, and David Bohegian

APPROVAL OF ACTION MINUTES

1. December 19, 2019 Meeting

HEARING FROM THE PUBLIC: Comments on items not on the agenda are welcome and are limited to three minutes. However, action or discussion by the Commission may not occur at this time.

DEPARTMENT REQUESTED ITEMS

2. City-wide Crosswalk Design Consideration

SIGN APPLICATION

None

TREE REMOVAL

None

ARCHITECTURAL REVIEW

3. 224 Church Street

4. 632 Zion Street- New Primary Dwelling

5. Ellen Sargent Plaque Proposal

PUBLIC HEARING

6. National Hotel Sign Variance (Request to continue to a future meeting – Will re-notice)

CANNABIS BUSINESS APPLICATIONS

PLANNING COMMISSION LIAISON REPORTS –Previously approved projects **– informational only**

STAFF APPROVALS AND DETERMINATIONS – (for information only):

519 Coyote Street – Side porch enclosure
214 Reward St. – Auxiliary Generator
519 Nimrod St. – Tree Removal (one Oak)
332 Jordan St. – Tree Removal (one Pine-dead)
222 Park Ave. – Tree Removal (one Maple)
200 Clay Street – Re-roof, like-for-like
320 Woodpecker – Re-roof, like-for-like

CORRESPONDENCE:

ANNOUNCEMENTS:

Next Regular Meeting – February 20, 2020

ADJOURNMENT

City of Nevada City

PLANNING COMMISSION ACTION MINUTES
THURSDAY, DECEMBER 19, 2019 1:30 PM
Council Chambers – City Hall
317 Broad Street - Nevada City, CA 95959

•AUDIENCE MEMBERS DESIRING TO ADDRESS THE PLANNING COMMISSION ON ITEMS ON THE AGENDA: After recognition by the Chair, state your name, address and your comments or questions. Please direct your remarks to the Commission. So that all interested parties may speak, please limit your comments to the item under discussion. All citizens will be given the opportunity to speak, consistent with Constitutional rights. Time limits are at the discretion of the Chair. **•If you challenge** the Commission's decision on any matter in court, you will be limited to raising only those issues you or someone else specifically raised or delivered in writing to the Planning Commission at or prior to the meeting. **•Requests for disability-related modifications or accommodations** may be made by contacting the City Planner and should be made at least 72 hours prior to the meeting.

Mission Statement
The City of Nevada City is dedicated to preserving and enhancing its small town character and historical architecture while providing quality public services for our current and future residents, businesses and visitors.

PLEDGE OF ALLEGIANCE

ROLL CALL Chair Josie Andrews, Vice-Chair Jason Rainey Commissioners, Peter Van Zant, Stuart Lauters, and David Bohegian

APPROVAL OF ACTION MINUTES

1. November 21, 2019

Public: None
Motion by P. Van Zant to approve the minutes as presented
Seconded by D. Bohegian
Vote: 3 ayes, 0 noes, 1 absent (Lauters), 1 abstention (Rainey), motion carries

HEARING FROM THE PUBLIC: Comments on items not on the agenda are welcome and are limited to three minutes. However, action or discussion by the Commission may not occur at this time.

See video record

SIGN APPLICATION

None

TREE REMOVAL

2. 9 Kidder Inn Town Campground – Request to remove five trees

Public: See video record
Motion by P. Van Zant to approve the tree removal as presented
Seconded by J. Rainey
Vote: 4 ayes, 0 noes, 1 absent (Lauters), motion carries

3. 555 Nevada- Request to remove one tree (two previously approved by staff)

Public: None
Motion by J. Rainey to approve the tree removal as presented
Seconded by D. Bohegian
Vote: 4 ayes, 0 noes, 1 absent (Lauters), motion carries

4. 210 Park Avenue – Request to remove three trees

Public: None
Motion by P. Van Zant to approve the tree removal as presented
Seconded by J. Rainey
Vote: 4 ayes, 0 noes, 1 absent (Lauters), motion carries

ARCHITECTURAL REVIEW

5. 224 Main Street- Repair and replace gutter; Repair and replace portico

Public: None
Motion by P. Van Zant to approve the application as presented
Seconded by D. Bohegian
Vote: 4 ayes, 0 noes, 1 absent (Lauters), motion carries

Liaison to review gutter profile: P. Van Zant

HISTORICAL PLAQUE PROPOSAL

6. Calanan Park- Revised plaque proposal honoring Ellen Sargent

Public: See video record
Motion by D. Bohegian to continue to a future meeting with direction to the applicant to add language that strengthens understanding of Ellen Sargent's role in the suffrage movement
Seconded by P. Van Zant
Vote: 4 ayes, 0 noes, 1 absent (Lauters), motion carries

PUBLIC HEARING

7. ADU Ordinance Update

Public: See video record
Motion by J. Rainey recommending to City Council that Draft Ordinance 2019-XX is Exempt from the California Environmental Quality Act pursuant to CEQA Guidelines Sections 15282(h) ,15303, 15305, and 15061
Seconded by P. Van Zant
Vote: 4 ayes, 0 noes, 1 absent (Lauters), motion carries

Motion by J. Rainey recommending to City Council that they adopt Draft Ordinance 2019-XX to amend Section 17.72.020 through Section 17.72.038, as amended by the Planning Commission, in order to update the City's Ordinance pertaining to Accessory Dwelling Units in compliance with adopted State legislation
Seconded by P. Van Zant
Vote: 4 ayes, 0 noes, 1 absent (Lauters), motion carries

Ordinance Revisions as Recommended by the Planning Commission:

17.72.026 (I.2) Accessory Dwelling units shall not exceed 16-feet in height unless constructed over a garage, in which case the ADU shall not exceed the height of the primary residence or 35-feet

17.72.026 (I.3) Accessory Dwelling Unit Entrances shall be oriented to face the street except that if topographic or other site constraints prevent such orientation, the entrance shall be screened from neighboring properties.

17.72.026 (M) Any ADU taking advantage of reduced setbacks pursuant to Section 17.72.027 shall not have doors or windows within such setback unless required to meet health and safety requirements**.**

17.72.026 (P) A detached ADU may include an attached unconditioned garage space that does not exceed 250 square feet.

17.72.029 (G) Kitchen Requirements: The junior accessory dwelling unit shall include an efficiency kitchen, including a food preparation counter, a cook stove (as opposed to the term "cooking appliances" provided by the State language), and storage cabinets that are of reasonable size in relation to the size of the junior accessory dwelling unit.

8. 211 Broad Street – Sign Variance and National Hotel Exterior Renovation (continue to January 16, 2019)

Public: None
Motion by P. Van Zant to continue until the January 16, 2019 meeting
Seconded by J. Rainey
Vote: 4 ayes, 0 noes, 1 absent (Lauters), motion carries

CANNABIS BUSINESS APPLICATIONS

9. SBGE, Inc, dba Bloomfield - Cannabis Extraction Manufacturing and Distribution Business- Amendment to include a hydrocarbon extraction component

Motion by D. Bohegian to approve the amended application as presented to authorize the addition of hydrocarbon extraction to their authorized application and business operation, subject to the updated Conditions of Approval as amended by the planning commission, making findings a-c
Seconded by P. Van Zant
Vote: 4 ayes, 0 noes, 1 absent (Lauters), motion carries

Added Condition of approval: Operational hours between 8PM to 8AM shall be passive in nature, in terms of operation shall not be visible from an outside observer and shall not involve shipping/receiving activities.

10. Deep Dessert, LLC – Cannabis Infusion Manufacturing and Distribution Business

Public: None
Motion by P. Van Zant to find the project exempt pursuant to CEQA Guidelines Section 15301 (existing facilities) because the building is already existing and the proposed cannabis manufacturing and distribution use is consistent with the principal permitted uses allowed in the Light Industrial Zoning District pursuant to Section 17.48.020, and there is no expansion of use beyond what is already considered a permitted use
Seconded by J. Rainey
Vote: 4 ayes, 0 noes, 1 absent (Lauters), motion carries

Motion by P. Van Zant to approve the application as presented to authorize a cannabis business permit to Deep Desert LLC for a manufacturing and distribution operation at 555 Searls Avenue, suite 4 subject to the recommended Conditions of Approval, attached, as may be modified by the planning commission, making findings "a" and "b":
Seconded by D. Bohegian
Vote: 4 ayes, 0 noes, 1 absent (Lauters), motion carries

11. MMR Books, LLC- Cannabis Hydrocarbon Extraction Manufacturing and Distribution Business

Public: None
Motion by P. Van Zant to find the project exempt pursuant to CEQA Guidelines Section 15301 (existing facilities) because the building is already existing and the proposed cannabis manufacturing and distribution use is consistent with the principal permitted uses allowed in the Light Industrial Zoning District pursuant to Section 17.48.020, and there is no expansion of use beyond what is already considered a permitted use
Seconded by D. Bohegian
Vote: 4 ayes, 0 noes, 1 absent (Lauters), motion carries

Motion by P. Van Zant to approve the application as presented to authorize a cannabis business permit to MMR Books, LLC "MMR" for a manufacturing and distribution operation at 545 Searls Avenue, suite 5 subject to the recommended Conditions of Approval, attached, as may be modified by the planning commission, making findings "a" and "b":
Seconded by D. Bohegian
Vote: 4 ayes, 0 noes, 1 absent (Lauters), motion carries

12. Spoiled Patient Collective, LLC - Cannabis Hydrocarbon Extraction Manufacturing Business

Public: None
Motion by P. Van Zant to find the project exempt pursuant to CEQA Guidelines Section 15301 (existing facilities) because the building is already existing and the proposed cannabis manufacturing and distribution use is consistent with the principal permitted uses allowed in the Light Industrial Zoning District pursuant to Section 17.48.020, and there is no expansion of use beyond what is already considered a permitted use
Seconded by D. Bohegian
Vote: 4 ayes, 0 noes, 1 absent (Lauters), motion carries

Motion by D. Bohegian to approve the application as presented to authorize a cannabis business permit to Spoiled Patient Collective, LLC for a manufacturing operation at 545 Searls Avenue, suite 1 subject to the recommended Conditions of Approval, attached, as may be modified by the planning commission, making findings "a" and "b":
Seconded by P. Van Zant
Vote: 4 ayes, 0 noes, 1 absent (Lauters), motion carries

PLANNING COMMISSION LIAISON REPORTS –Previously approved projects **– informational only**

STAFF APPROVALS AND DETERMINATIONS – (for information only):

To Be Provided at Meeting

CORRESPONDENCE:

ANNOUNCEMENTS:

Next Regular Meeting – January 16, 2020

Happy Holidays!

ADJOURNMENT

Motion by J. Rainey to adjourn at 5:43 p.m.
Seconded by D. Bohegian
4 ayes, 0 noes, 1 absent (Lauters), motion carries

City of Nevada City

TO: Planning Commission

FROM: Amy Wolfson, City Planner

MEETING DATE: January 16, 2020

RE: Crosswalk Design throughout the City

BACKGROUND: Engineering and Public Works Department staff are preparing to install a crosswalk at the intersection of Railroad Avenue and Sacramento Street, as part of pedestrian improvement plans being implemented city-wide. Because crosswalks are often prominently visible, they have the potential for impacting the overall City aesthetics. Staff is seeking the Planning Commission's direction on material and design options so that these improvements maintain a consistent aesthetic throughout the City, and are compatible with the City's design goals, particularly in the Historic District. Attached to this staff report are several examples of crosswalk styles for the Commission's consideration.

REQUESTED ACTION: Proved direction to Engineering and Public Works staff on appropriate an appropriate crosswalk design to use throughout the City.

NEVADA CITY
EAST BROAD
STREET

CITRUS HEIGHTS
Antelope Rd
KEEP
CALL

ROSEVILLE

OLD DOWNTOWN
FOLSOM

OLD DOWNTOWN FOLSOM

GRASS VALLEY

GRASS VALLEY

OLD DOWNTOWN
SACRAMENTO

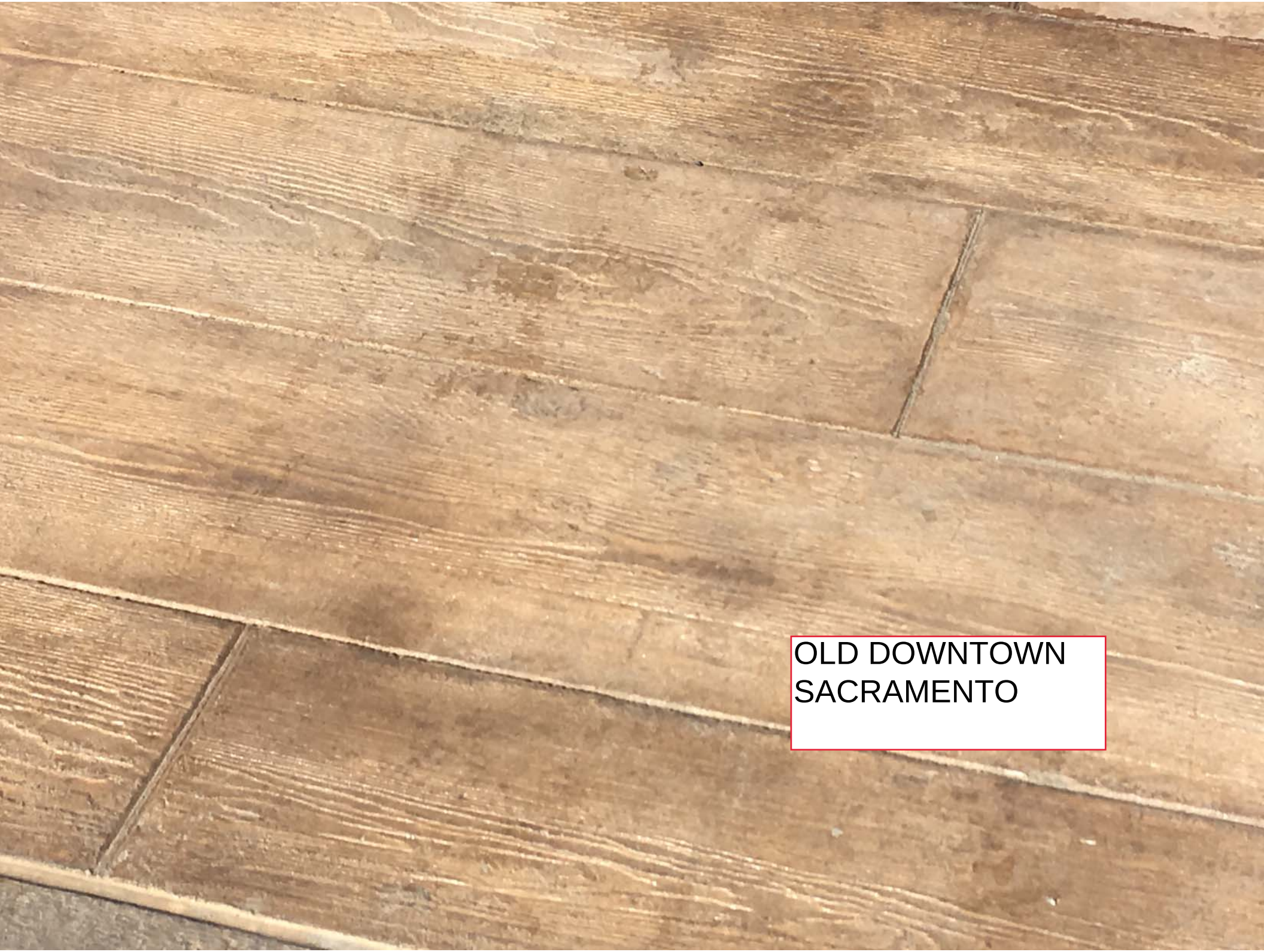
OLD DOWNTOWN
SACRAMENTO

DOWNTOWN
TRUCKEE

DOWNTOWN
TRUCKEE

DOWNTOWN
PLACERVILLE

DOWNTOWN
PLACERVILLE

City of Nevada City

TO: Planning Commission

FROM: Amy Wolfson, City Planner

MEETING DATE: January 16, 2020

RE: Architectural Review Application for Exterior Alterations at 224 Church Street

ATTACHMENTS:

1) Application for Architectural Review
2) Improvement Plans (Site Plan, Floor Plan, Elevation Details)
3) Garage Door Spec Sheet

ACTION REQUESTED:

1) Approve new garage door for 224 Church

SITE SPECIFICATIONS:

Lot Size:	0.31acres	**Lot Coverage:**	100%
Zoning:	GB-HD-SC: General Business-Historical District	**Building Height:**	40-feet
Setbacks:	None	**Historical District:**	Within

BACKGROUND: The owner of the building, John Conger and his design team originally presented an application for exterior alterations of the subject building at the August 15, 2019 Planning Commission meeting. At the September 19, 2019 meeting, the Planning Commission approved a Use Permit for specified office uses on the ground floor and also approved architectural review for a newly proposed garage with upper story deck, to be located in the rear of the existing building. The Commission further approved exterior alterations at their Meeting held on October 17, 2019 and the Special Meeting held on October 30, 2019.

Immediately following this approval, Conger's neighbor expressed concern that the corrugated metal cladding and faux windows would create gaps between the rock face and metal that would potentially invite rodent and pest problems. As a result, Conger requested that the Planning Commission consider a revised Architectural Review proposal at their November 21, 2019 meeting to reconsider the metal cladding and faux windows and allow the rock face to remain as is, and also allow the north elevation to remain as is, though painted in the proposed color scheme. The Planning Commission denied Conger's proposal from the November 21st meeting based on it being incompatible with Motherlode architecture. However, Conger appealed this decision at the January 8, City Council meeting, whereby Council overturned the Planning Commission decision with a 4 to 1 vote. Therefore the elevations as presented at the November 21st Planning Commission meeting and at the January 8th City Council Meeting represent the approved Architectural Review, attached.

The current structure was constructed in 1962 and is not considered a contributing building to the National Register Historic District. The National Register inventory describes it as follows:

> *This one-story, flat roof building with uncovered rubble stone on the Main Street end and an all-glass front is not compatible with Nevada City architecture.*

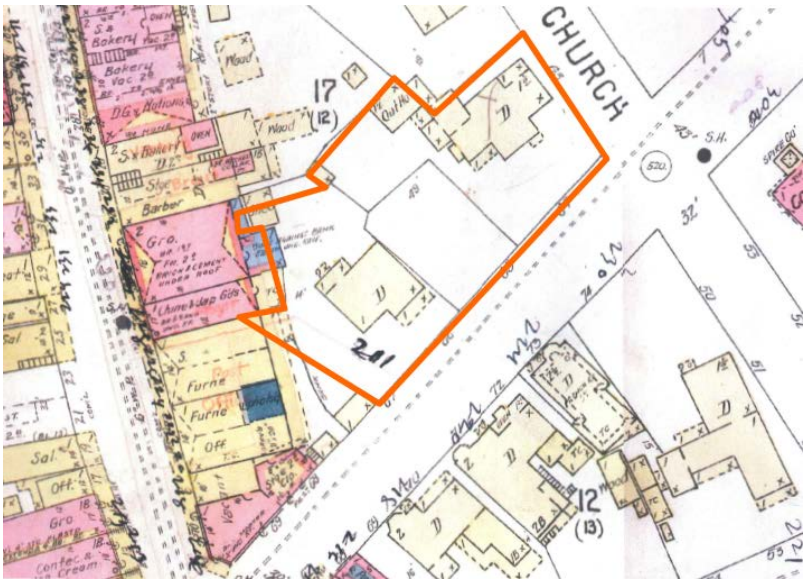

1898 Sanborn Map Excerpt (orange line represents approximate, current property lines)

As submitted for the National Register (1985)

<u>CURRENT PROPOSAL</u>: Conger is proposing to install a garage door on the front of the building, facing Church Street, with access from the existing parking lot. The garage door is a full-view, aluminum door that incorporates window lites across the entire panel.

The four parking spaces will need to be removed in order to accommodate the drive access. The loss of parking will limit the commercial use of the building, though presently Conger has decided to improve the space only for residential use of two units, for which adequate parking exists. Staff has added a condition of approval, that any commercial use of the building shall require evaluation by the Planning Department for consistency with commercial, off-street parking standards.

Conger is also proposing a new barrier gate at the entrance of the parking lot off Church Street. However, this feature is not under the purview of the Planning Commission since it does not involve an alteration of the building itself. It will need to be reviewed by City staff, including the Fire and Engineering Departments in order to make sure it is installed consistent with safety standards.

REGULATORY CONSIDERATIONS:

Historical District: Pursuant to Section 17.68.070 of the City Municipal Code, Stylistic conformance of alteration or new construction, all buildings which may hereafter be constructed or altered as to their exterior appearance within the historical district shall substantially conform with the Mother Lode type of architecture with respect to their exterior appearance within public view.

Scenic Corridor: The subject property is designated with a scenic corridor (SC) combining district. This designation is applied to land areas which are adjacent to roads and highways which are indicated on the General Plan with the symbol for scenic corridors, and as may be designated by the city council from time to time. These roadways are generally entryways to Nevada City which were recognized in the General Plan as being particularly important to protect the existing essential character of Nevada City, namely that of a small, compact historical town surrounded by green, wooded hills, by hiding development from view from the highways and preserving the existing tree cover to the greatest extent possible, and assuring visually pleasing corridors. The planning commission may require the incorporation of special conditions of approval or design features, prior to approval.

Environmental Review: Staff has determined that the project is exempt from environmental review pursuant to §15301 of the California Environmental Quality Act (CEQA) guidelines. The CEQA Guidelines for Categorical Exemption §15301, Existing Facilities "consists of operation, repair maintenance of existing public or private structures or facilities…involving no or negligible expansion of use beyond that existing at the time of the lead agency's determination."

RECOMMENDED MOTION:

A. The Planning Commission, acting as the Architectural Review Committee, approves the Architectural Review application, as conditioned, for the proposed exterior alterations located at 224 Church Street, Nevada City, CA, making findings a and d:

   a. That the garage door is generally compatible with Mother Lode style Architecture and with the Historical District

   b. That the garage door is compatible with the context of the surrounding neighborhood.

   c. That the garage door, as conditioned, is consistent with the General Plan in preserving the Nevada City essential character and scenic corridor designation;

   d. That the garage door, as conditioned, contains sufficient design and/or landscaping features to protect and enhance the aesthetics of the scenic corridor.

RECOMMENDED CONIDTIONS OF APPROVAL:

1. Nevada City contracts with the Nevada County Building Department for issuance of permits. The County will not issue permits unless the plans have been stamped and approved by Nevada City. Therefore, prior to issuance of a building permit, submit one digital copy of plans OR three sets of plans to Nevada City Planning Department, along with a filing fee of $100 (made payable to the City of Nevada City). The plans will be reviewed by the City Planner and City Engineer for consistency with the approval and will require their signatures.

2. Material selections, colors, and all proposed work shall substantially comply with the exhibits presented and approved by the Planning Commission.

3. Any future use beyond the two residential units shall be evaluated by the City Planner to determine the adequacy of off-street parking to serve those uses.

4. All State, Local, and Federal permits required for the project shall be the responsibility of the property owner including, but not limited to the following agencies, Northern Sierra Air Quality District (potentially for the fireplace), Nevada County Building Department, the Nevada City Engineer, and the Nevada City Fire Department.

5. The decision of the planning commission may be appealed to the city council not later than fifteen (15) days after this final action or decision. Any work during this period is at the applicant's own risk.

OFFICE USE ONLY
Filing Fees
Chk ☐ Cash ☐
Bus. Lic.

CITY OF NEVADA CITY

317 Broad Street • Nevada City, California 95959 • (530) 265-2496

APPLICATION FOR ARCHITECTURAL REVIEW

Applicant/Property Owner

John Conger
Name

224 Church St.
Address

Nevada City, CA
City, State

530-277-5061
Phone

jconger56@gmail.com
email address

Check all that apply:

- ☐ A New Building
- ☑ Changes to Existing
- ☐ In the Historic District
- ☐ Other (Describe)

Number of existing units 1

Year of original construction 1962

Supporting data must be attached:

- *Color chips*
- *Material specs, i.e. roofing, windows, etc.*
- *Elevations/Site plans*

Address and Assessor's parcel number of property where construction is proposed (also complete attached location key map):

224 Church St.
Street Address

005-390-004
Assessor's Parcel Number

Nearest cross street Main St.

New floor area proposed 300 S.F.

Briefly describe proposed project:

Remodel of existing commercial building. Convert portion of building into two residential units, one at 1351 sq.ft., the other at 1217 sq.ft. Add windows for both residential units. Convert portion of upper level office space into residential garage. Add new 300 sf garage at lower level. Install barrier arm gates at both driveway entrances.

Number of dwelling units on property 2

COMPLETE FOR ALTERATIONS TO EXISTING BUILDINGS:

Construction will involve (check all that apply):

- ☐ Foundation replacement
- ☐ Siding replacement - ☐ All siding or ☐ Repairs over _____%
- ☐ Roof replacement
- ☒ Use of metal framed windows
- ☒ Removal of old materials. Describe: Remove portions of concrete walls for new windows.

DESCRIPTION OF NEW CONSTRUCTION OR ALTERATIONS: Attach architectural elevations or perspective drawing showing all materials, colors, finish, lighting, ornamental devices, and any signs. The Commission prefers color chips.

SUPPORTING DOCUMENTS: Read and complete the attached pages and include any other statements or attach supporting information to substantiate that the architecture is consistent with the Mother Lode Era, or is otherwise consistent with the surroundings. Attach **TEN FOLDED COPIES** of the elevations and/or supporting information, including a site plan showing the existing and proposed building setbacks from all property lines. **ALL BUILDING DIMENSIONS, INCLUDING BUILDING HEIGHTS, MUST BE SHOWN ON THE ELEVATIONS.**

I am the owner or authorized agent for the subject property. If agent, submit letter from property owner.

Chris Andrews — Digitally signed by Chris Andrews DN: C=US, E=chris@andrews-enterprises.com, O=L="Andrews Enterprises, LLC", CN=Chris Andrews Date: 2020.01.06 10:37:26-08'00'
Signature

1/6/2020
Date

----------*FOR OFFICE USE ONLY*----------

Approved by:

Signature — Date

Signature — Date

PLEASE ATTEND THE PLANNING COMMISSION MEETING TO DISCUSS YOUR REQUEST, OR YOUR APPLICATION WILL BE CONTINUED TO THE NEXT MEETING

CITY OF NEVADA CITY
ARCHITECTURAL REVIEW GUIDELINES
AND SUPPORTING INFORMATION

Please read this document and provide the information that applies to your application. The City also maintains some reference material regarding historical architecture. Ask the City Planner for details.

POLICY DECLARATION:

The City's goal in requiring architectural review is to implement the goals of the City's General Plan by preserving the character of Nevada City architecture in terms of historical value, sit coverage and planning, volume and massing, materials, color, general design and details. Historical District work must be in strict compliance with the Mother Lode Era. Preservation of historic materials is encouraged.

The Planning Commission will review each application on its own merit and in the context of the neighborhood of the project. For example, plywood siding might be acceptable in an area of modern, similar homes, but not in a neighborhood of old Victorian homes.

Generally, Nevada City architecture is characterized by many of these design features typical of the Mother Lode Era: Steep peak roofs with pitches between 6:12 & 12:12, overhanging roofs with gable ends, covered porches and entries; multi-pane, vertical, and by windows, and use of horizontal painted rustic siding. Alterations to older homes should match existing historic materials. Vinyl siding has been declared potentially hazardous by the City's Fire Department.

SITE PLAN AND ENVIRONMENTAL CONSIDERATIONS:

Provide a site plan of the property to scale, showing any proposed tree removal, setbacks, building coverage, fencing and landscaping concepts. Attach a tree removal application form if there will be any trees removed. Show off-street parking areas.

Is the coverage and setback of the new construction compatible with surrounding houses? ☑ Yes ☐ No

Please explain how it is compatible

Project is in GB Zone. Parcel does not abut any residential parcels, so no setbacks are required.

VOLUME AND MASSING Lot Size 13,503 SF

Will the proposed building or changes	Yes	No
Have a larger floor plan than surrounding buildings?	☐	☑
Be taller than surrounding buildings?	☐	☑
Block views or sunshine from existing buildings?	☐	☑
Does the site plan provide a private yard area?	☐	☑

Discussion, if needed:

MATERIALS

Generally, the City prefers horizontal wood siding, treated wood shingles, composition shingles, or metal roofing, true used brick, new brick, or mine rock veneers and accents, wood windows in older neighborhoods, and roof pitches in excess of 6:12.

Please list all materials that you will use and alterations proposed:

Roof: n/a Pitch: _____

Siding: n/a

Windows: Aluminum

Trim: Concrete

Foundation/Pony walls: n/a

Decks, porches, railings: Concrete roof deck, metal railing

COLORS (Please provide ten color chips per color)

		Color brand, name, number
Roof:	n/a	
Trim:	match existing	
Accents:	n/a	
Railings/Decks:	no paint, exposed steel	

DETAILS

Please provide sufficient information to allow review of the building's details, including:

- Foundation, rock work or veneer accents
- Vents and flues
- Door and window materials, trim and design detail
- Porch and deck framing and railing details
- Garage door

OTHER APPLICABLE INFORMATION

Use the space below to provide any additional information for the Planning Commission.

BUILDING COVERAGE CALCULATION	
STRUCTURE	SQUARE FOOTAGE
(E) BUILDING	4140 S.F.
NEW GARAGE	300 S.F.
TOTAL	4440 S.F.
	PROPERTY = 0.31 AC = 13,503 S.F.
	COVERAGE = 32.9%

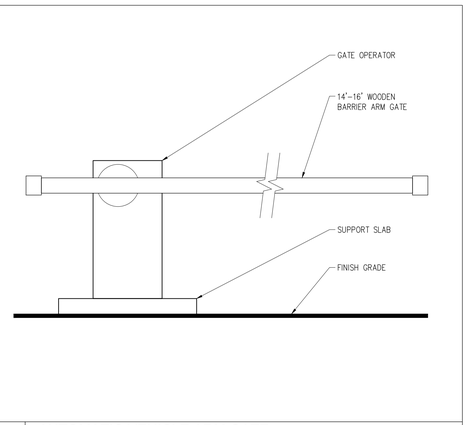

4 AUTOMATIC VEHICLE ARM GATE
SCALE: 3/4"=1'-0"

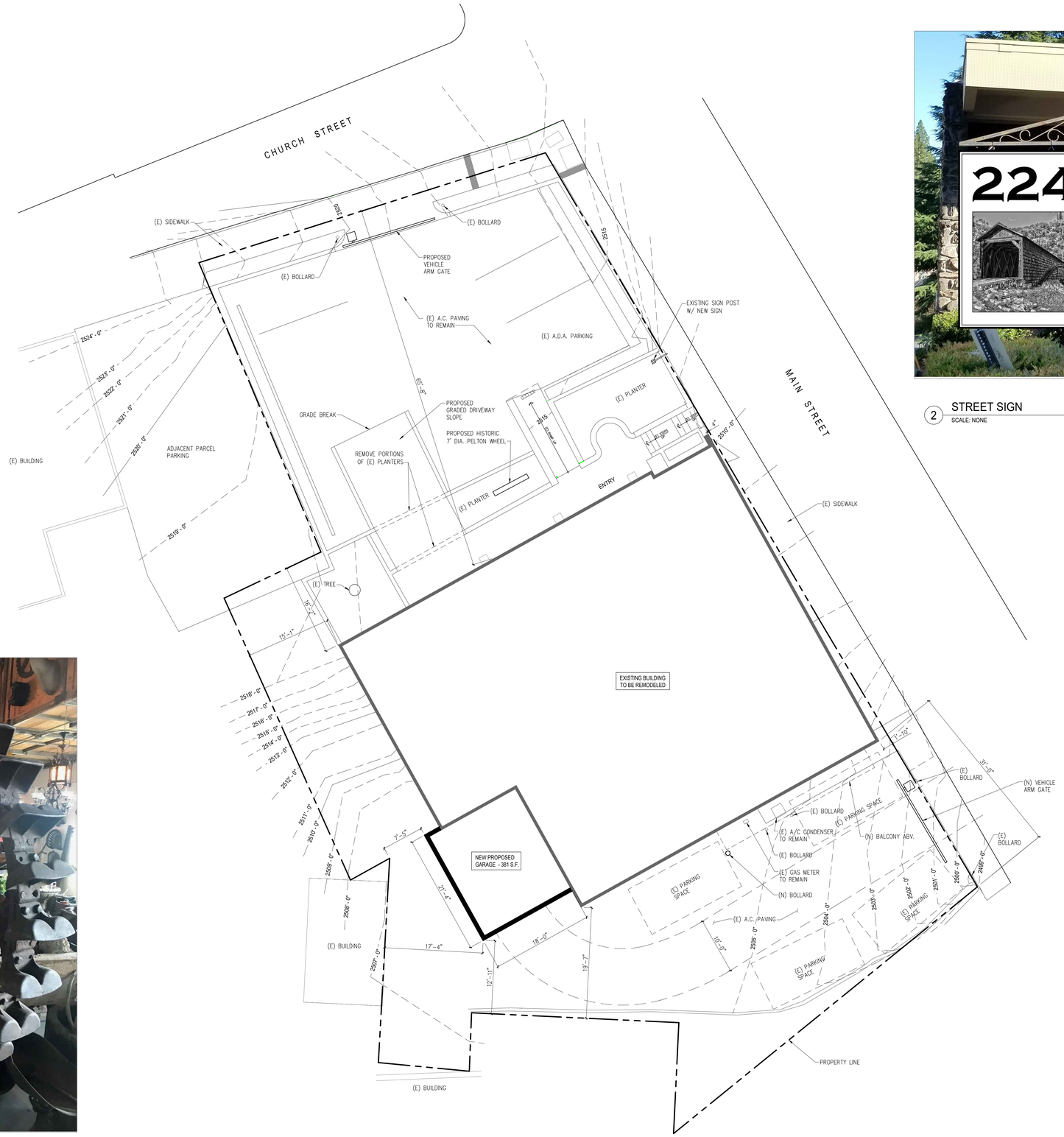

1 SITE PLAN
SCALE: 1/8" = 1'-0"

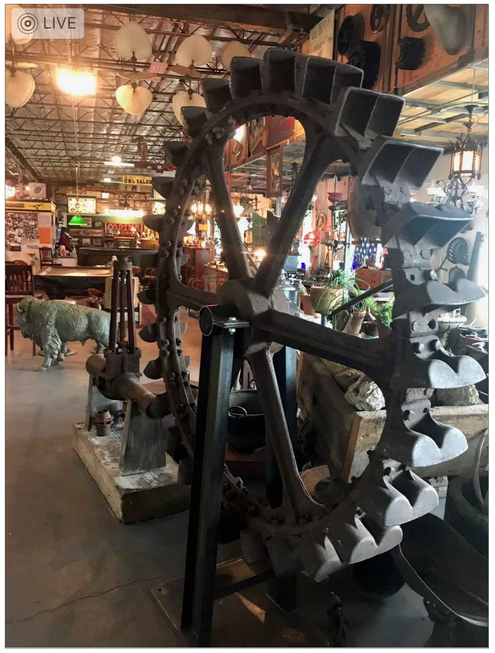

3 PELTON WHEEL
SCALE: NONE

2 STREET SIGN
SCALE: NONE

CALIFORNIA BUILDING PLANS
120 JOERSCHKE DRIVE, #5
GRASS VALLEY, CALIFORNIA 95945
(530) 913-3162 | www.cabuildingplans.com

DWG. STATUS/REVISIONS
1/6/2020
PLANNING SUBMITTAL

PROJECT:
224 CHURCH ST.
TENANT IMPROVEMENT

APN: 005-390-004

OWNER:
JOHN CONGER
224 CHURCH STREET
NEVADA CITY, CALIFORNIA 95959

DRAWN:	W.J.R.
CHECKED:	C.W.A.
DATE:	1/6/2020
SCALE:	AS NOTED
JOB NO.:	19035

SITE PLAN

A1.1

CALIFORNIA BUILDING PLANS
120 JOERSCHKE DRIVE, #5
GRASS VALLEY, CALIFORNIA 95945
(530) 913-3162 | www.cabuildingplans.com

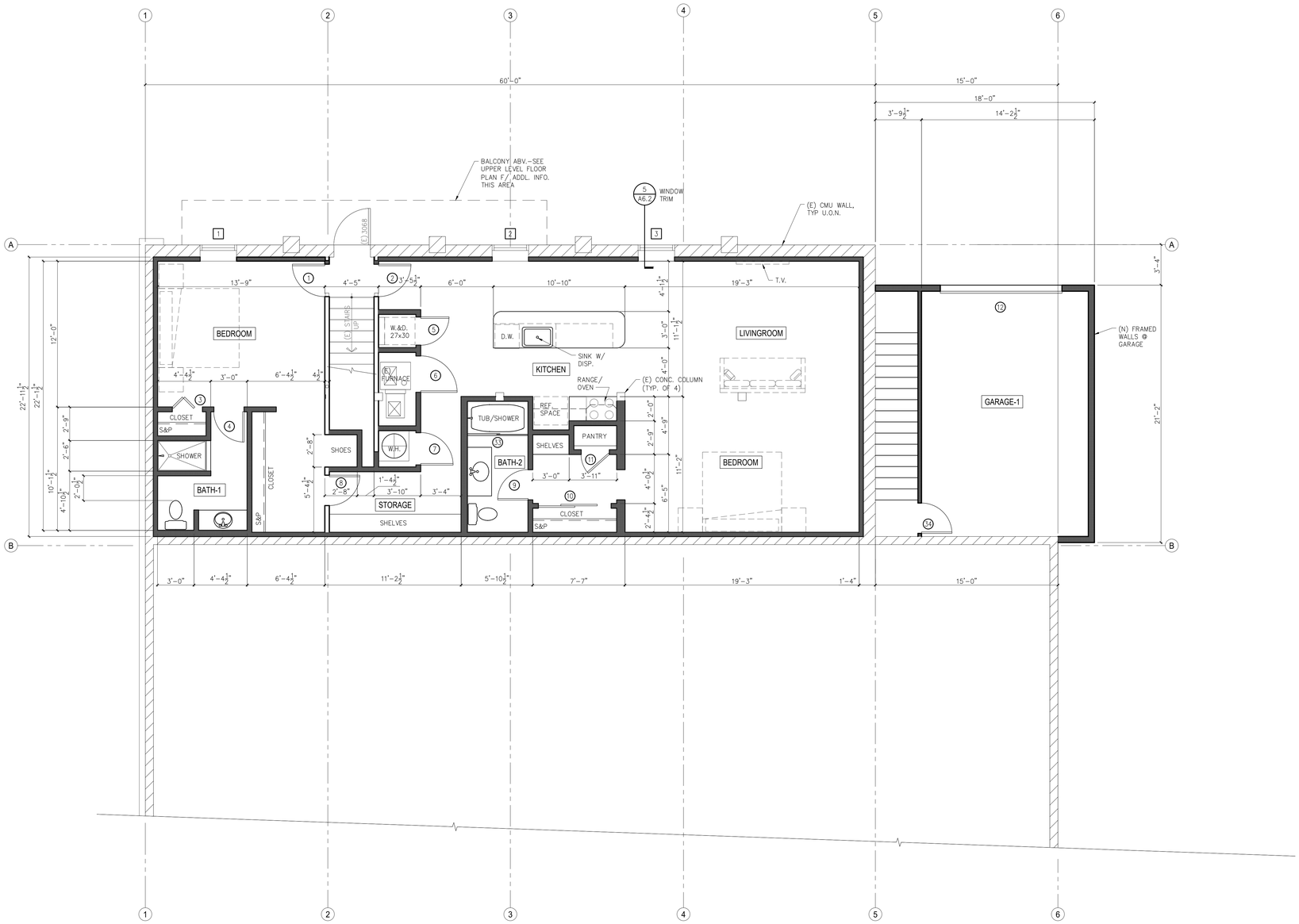

1 LOWER LEVEL FLOOR PLAN
SCALE: 1/4" = 1'-0"

PROJECT NORTH

WALL LEGEND	
	EXISTING 2x4 WALL
	NEW 2x4 WALL
	EXISTING 8" C.M.U. WALL
	NEW 8" C.M.U. WALL

DWG. STATUS/REVISIONS	
△	1/6/2020 PLANNING SUBMITTAL

PROJECT:

224 CHURCH ST.
TENANT IMPROVEMENT

APN: 005-390-004

OWNER:

JOHN CONGER
224 CHURCH STREET
NEVADA CITY, CALIFORNIA 95959

DRAWN:	W.J.R.
CHECKED:	C.W.A.
DATE:	1/6/2020
SCALE:	AS NOTED
JOB NO.:	19035

LOWER LEVEL FLOOR PLAN

A3.1

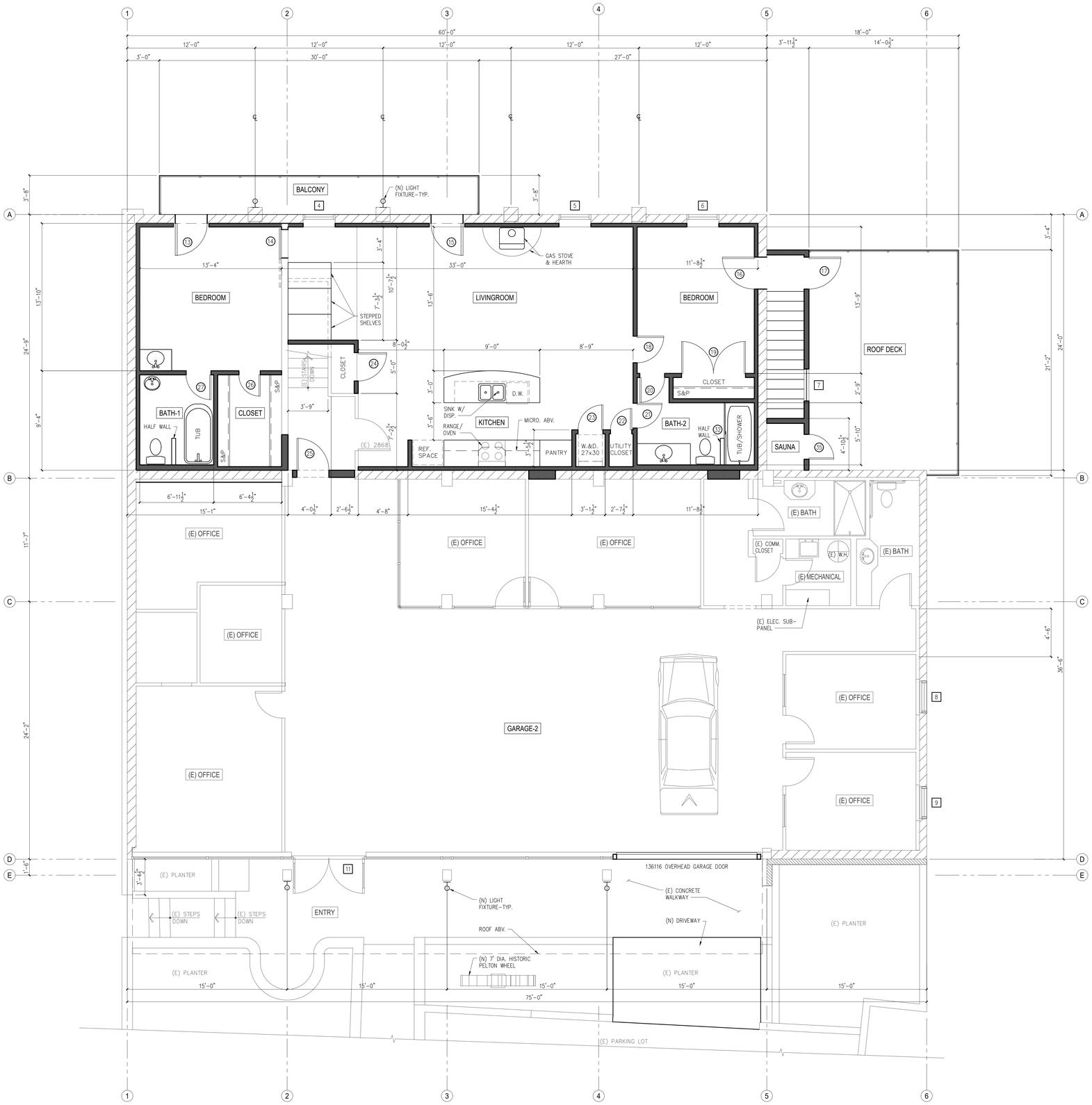

1 UPPER LEVEL FLOOR PLAN

SCALE: 1/4" = 1'-0"

PROJECT NORTH

WALL LEGEND	
	EXISTING 2x4 WALL
	NEW 2x4 WALL
	EXISTING 8" C.M.U. WALL
	NEW 8" C.M.U. WALL

CALIFORNIA BUILDING PLANS
120 JOERSCHKE DRIVE, #5
GRASS VALLEY, CALIFORNIA 95945
(530) 913-3162 | www.cabuildingplans.com

DWG. STATUS/REVISIONS

1/6/2020
PLANNING SUBMITTAL

PROJECT:

224 CHURCH ST.
TENANT IMPROVEMENT

APN: 005-390-004

OWNER:

JOHN CONGER
224 CHURCH STREET
NEVADA CITY, CALIFORNIA 95959

DRAWN:	W.J.R.
CHECKED:	C.W.A.
DATE:	1/6/2020
SCALE:	AS NOTED
JOB NO.:	19035

UPPER LEVEL FLOOR PLAN

A3.2

WINDOW SCHEDULE

MARK	SIZE	TYPE	FRAME MATERIAL	MAX U-FACTOR	MAX SHGC	SAFETY GLAZING	NOTES
1	3'-0" x 6'-0"	CASEMENT	–	–	–	–	SEE EXTERIOR ELEVATIONS
2	3'-0" x 6'-0"	CASEMENT	–	–	–	–	SEE EXTERIOR ELEVATIONS
3	3'-0" x 6'-0"	CASEMENT	–	–	–	–	SEE EXTERIOR ELEVATIONS
4	3'-4" x 8'-4"	CASEMENT	–	–	–	–	SEE EXTERIOR ELEVATIONS
5	3'-4" x 8'-4"	CASEMENT	–	–	–	–	SEE EXTERIOR ELEVATIONS
6	3'-4" x 8'-4"	CASEMENT	–	–	–	–	SEE EXTERIOR ELEVATIONS
7	3'-0" x 4'-0"	SINGLE HUNG	–	–	–	–	SEE EXTERIOR ELEVATIONS
8	3'-4" x 6'-4"	CASEMENT	–	–	–	–	SEE EXTERIOR ELEVATIONS
9	3'-4" x 6'-4"	CASEMENT	–	–	–	–	SEE EXTERIOR ELEVATIONS
10	3'-4" x 7'-0"	STOREFRONT	–	–	–	FULLY TEMPERED	SEE EXTERIOR ELEVATIONS
11	2'-6" x 6'-0"	STOREFRONT	–	–	–	FULLY TEMPERED	SEE EXTERIOR ELEVATIONS

NOTES:

1. IF WINDOW SILL IS LESS THAN 24 INCHES FROM THE FINISH FLOOR AND MORE THAN 72 INCHES ABOVE EXTERIOR FINISH GRADE. PROVIDE WINDOW OPENING CONTROL DEVICE. (R312.2.1)
2. EGRESS WINDOW. OPENING AREA OF WINDOW MUST BE 5.7 SQUARE FEET (5 SQUARE FEET AT GRADE FLOOR OR BELOW GRADE OPENINGS), HAVE 24 INCHES CLEAR OPENING HEIGHT, AND 20 INCHES CLEAR OPENING WIDTH. SILL OF CLEAR OPENING SHALL BE AT 44 INCHES MAX ABOVE FINISH FLOOR.
3. EXISTING WINDOW

DOOR SCHEDULE

MARK	INT./EXT.	SIZE	TYPE	MATERIAL	CORE	RATING	MAX U-FACTOR	SHGC	SAFETY GLAZING	REMARKS
1	INTERIOR	2'-8"x 6'-8"	SIDE HINGE	–	–	–	–	–	–	–
2	INTERIOR	2'-8"x 6'-8"	SIDE HINGE	–	–	–	–	–	–	–
3	INTERIOR	2'-6"x 6'-8"	BI-FOLD	–	–	–	–	–	–	–
4	INTERIOR	2'-6"x 6'-8"	SIDE HINGE	–	–	–	–	–	–	–
5	INTERIOR	2'-4"x 6'-8"	SIDE HINGE	–	–	–	–	–	–	–
6	INTERIOR	3'-0"x 6'-8"	SIDE HINGE	–	–	–	–	–	–	–
7	INTERIOR	2'-8"x 6'-8"	SIDE HINGE	–	–	–	–	–	–	–
8	INTERIOR	2'-8"x 6'-8"	SIDE HINGE	–	–	–	–	–	–	–
9	INTERIOR	2'-6"x 6'-8"	SIDE HINGE	–	–	–	–	–	–	–
10	INTERIOR	PR. 3'-0"x 6'-8"	BI-PASS	–	–	–	–	–	–	–
11	INTERIOR	2'-4"x 6'-8"	SIDE HINGE	–	–	–	–	–	–	–
12	EXTERIOR	10'-0"x 7'-0"	OVER HEAD GARAGE DOOR	METAL	–	–	–	–	–	–
13	EXTERIOR	3'-0"x 8'-0"	SIDE HINGE	GLASS	–	–	–	–	FULLY TEMPERED	–
14	INTERIOR	2'-8"x 6'-8"	BARN-TYPE DOOR	–	–	–	–	–	–	–
15	EXTERIOR	3'-0"x 8'-0"	SIDE HINGE	GLASS	–	–	–	–	FULLY TEMPERED	–
16	INTERIOR	3'-0"x 6'-8"	SIDE HINGE	–	–	–	–	–	–	–
17	EXTERIOR	3'-0"x 6'-8"	SIDE HINGE	GLASS	–	–	–	–	FULLY TEMPERED	–
18	INTERIOR	2'-6"x 6'-8"	SIDE HINGE	–	–	–	–	–	–	–
19	INTERIOR	PR. 3'-0"x 6'-8"	SIDE HINGE	–	–	–	–	–	–	–
20	INTERIOR	2'-4"x 6'-8"	SIDE HINGE	–	–	–	–	–	–	–
21	INTERIOR	2'-4"x 6'-8"	SIDE HINGE	–	–	–	–	–	–	–
22	INTERIOR	2'-0"x 6'-8"	SIDE HINGE	–	–	–	–	–	–	–
23	INTERIOR	2'-4"x 6'-8"	SIDE HINGE	–	–	–	–	–	–	–
24	INTERIOR	2'-8"x 6'-8"	SIDE HINGE	–	–	–	–	–	–	–
25	INTERIOR	3'-0"x 7'-0"	SIDE HINGE	–	–	–	–	–	–	–
26	INTERIOR	2'-0"x 6'-8"	SIDE HINGE	–	–	–	–	–	–	–
27	INTERIOR	2'-4"x 6'-8"	SIDE HINGE	–	–	–	–	–	–	–
28	INTERIOR	2'-8"x 6'-8"	SIDE HINGE	–	–	–	–	–	–	–
29	INTERIOR	2'-8"x 6'-8"	SIDE HINGE	–	–	–	–	–	–	–
30	INTERIOR	9'-0"W.x 8'-0"H.	ROLL-UP	METAL	–	–	–	–	–	SECURITY DOOR
31	EXTERIOR	3'-0"x 8'-0"	SIDE HINGE	GLASS	–	–	–	–	FULLY TEMPERED	–
32	INTERIOR	5'-10"x 6'-0"	BI-PASS	GLASS	–	–	–	–	FULLY TEMPERED	SHOWER ENCLOSURE
33	INTERIOR	5'-0"x 6'-0"	BI-PASS	GLASS	–	–	–	–	FULLY TEMPERED	SHOWER ENCLOSURE
34	INTERIOR	2'-6"x 6'-8"	SIDE HINGE	–	–	20 MIN.	–	–	FULLY TEMPERED	1, 2, 4
35	INTERIOR	2'-4"x 6'-8"	SIDE HINGE	–	–	–	–	–	–	–
36	INTERIOR	3'-0"x 6'-8"	SIDE HINGE	–	–	–	–	–	–	–

REMARKS:

1. PROVIDE WEATHER STRIPPING.
2. MUST HAVE SELF-CLOSING HARDWARE.
3. WINDOW SILL IS LESS THAN 24 INCHES FROM THE FINISH FLOOR AND MORE THAN 72 INCHES ABOVE EXTERIOR FINISH GRADE. PROVIDE WINDOW OPENING CONTROL DEVICE. (R312.2.1)
4. MUST BE NON-COMBUSTIBLE, IGNITION-RESISTANT, MINIMUM 1 3/8" THICK, SOLID CORE OR HAVE A MINIMUM 20 MINUTE FIRE RESISTIVE RATING.

NOTES:

1. CONTRACTOR TO VERIFY ROUGH OPENING SIZES PRIOR TO ORDERING WINDOWS.

CALIFORNIA BUILDING PLANS

120 JOERSCHKE DRIVE, #5
GRASS VALLEY, CALIFORNIA 95945
(530) 913-3162 | www.cabuildingplans.com

DWG. STATUS/REVISIONS

△ 1/6/2020
PLANNING SUBMITTAL

PROJECT:

224 CHURCH ST.
TENANT IMPROVEMENT

APN: 005-390-004

OWNER:

JOHN CONGER

224 CHURCH STREET
NEVADA CITY, CALIFORNIA 95959

DRAWN:	W.J.R.
CHECKED:	C.W.A.
DATE:	1/6/2020
SCALE:	AS NOTED
JOB NO.:	19035

DOOR & WINDOW SCHEDULE / EQUIPMENT SCHEDULE

A3.3

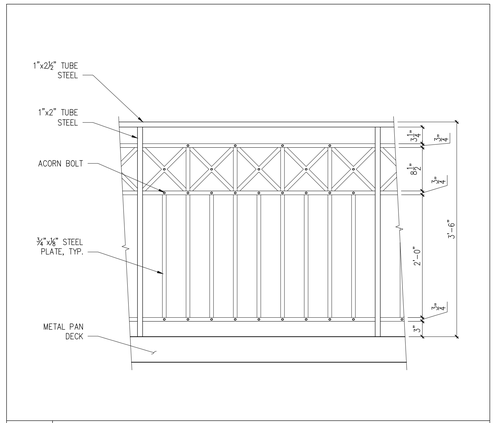

4 BALCONY RAILING
SCALE: 1"=1'-0"

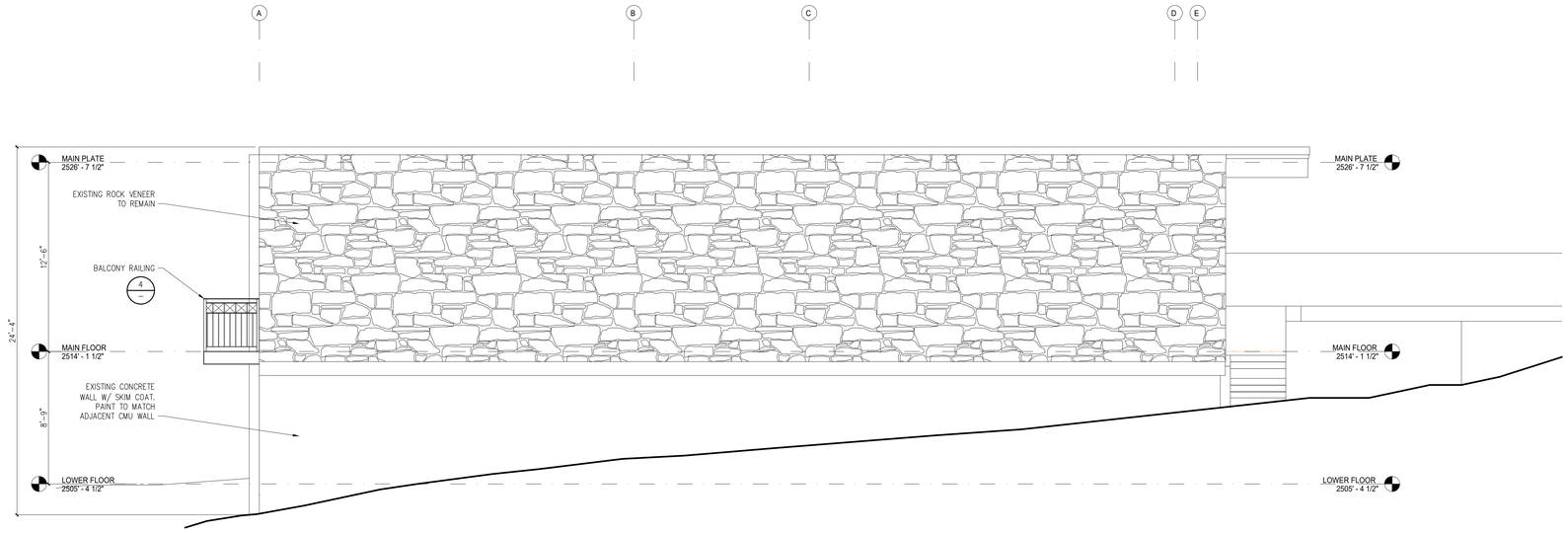

2 EAST ELEVATION
SCALE: 1/4" = 1'-0"

MATERIALS LIST

NOTE: THE FOLLOWING IS A SUMMARY OF THE PROPOSED EXTERIOR MATERIALS. HATCHES SHOWN MAY NOT BE TO SCALE. ALL EXTERIOR MATERIALS TO BE VERIFIED BY OWNER.

ENTRY FASCIA: EXISTING, TO REMAIN

STOREFRONT WINDOWS: EXISTING, TO REMAIN

WINDOWS: ANDERSON E-SERIES, DARK BRONZE METAL CLAD WOOD WITH SIMULATED DIVIDED LITES PER ELEVATIONS (7/8" WIDE MULLIONS, MIN.)

CMU BLOCK: BASALITE SHOT BLAST COLOR 790 OR 791. PAINT TO MATCH EXISTING

STONE VENEER: EXISTING, TO REMAIN

GARAGE DOOR: NICKSBUILDING.COM HERITAGE KNOTTY CEDAR, NO LITES COLOR - NATURAL WITH VAN DYKE BROWN GLAZE, LIGHT DISTRESSED

3 LIGHT FIXTURE
SCALE: 1/4" = 1'-0"

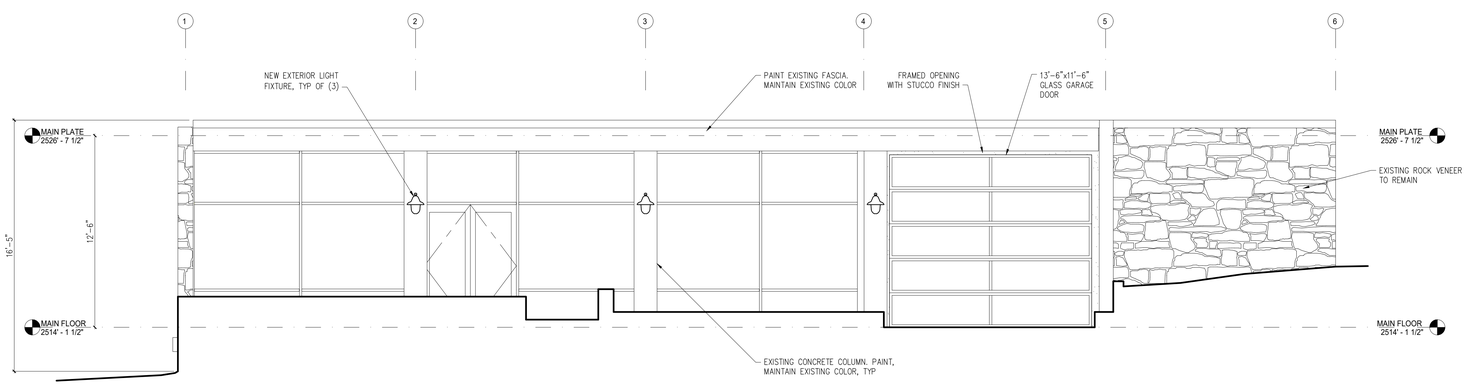

1 NORTH ELEVATION
SCALE: 1/4" = 1'-0"

CALIFORNIA BUILDING PLANS
120 JOERSCHKE DRIVE, #5
GRASS VALLEY, CALIFORNIA 95945
(530) 913-3162 | www.cabuildingplans.com

DWG. STATUS/REVISIONS
1/6/2020 PLANNING SUBMITTAL

PROJECT:
224 CHURCH ST.
TENANT IMPROVEMENT
APN: 005-390-004

OWNER:
JOHN CONGER
224 CHURCH STREET
NEVADA CITY, CALIFORNIA 95959

DRAWN:	W.J.R.
CHECKED:	C.W.A.
DATE:	1/6/2020
SCALE:	AS NOTED
JOB NO.:	19035

EXTERIOR ELEVATIONS

A6.1

CALIFORNIA BUILDING PLANS
120 JOERSCHKE DRIVE, #5
GRASS VALLEY, CALIFORNIA 95945
(530) 913-3162 | www.cabuildingplans.com

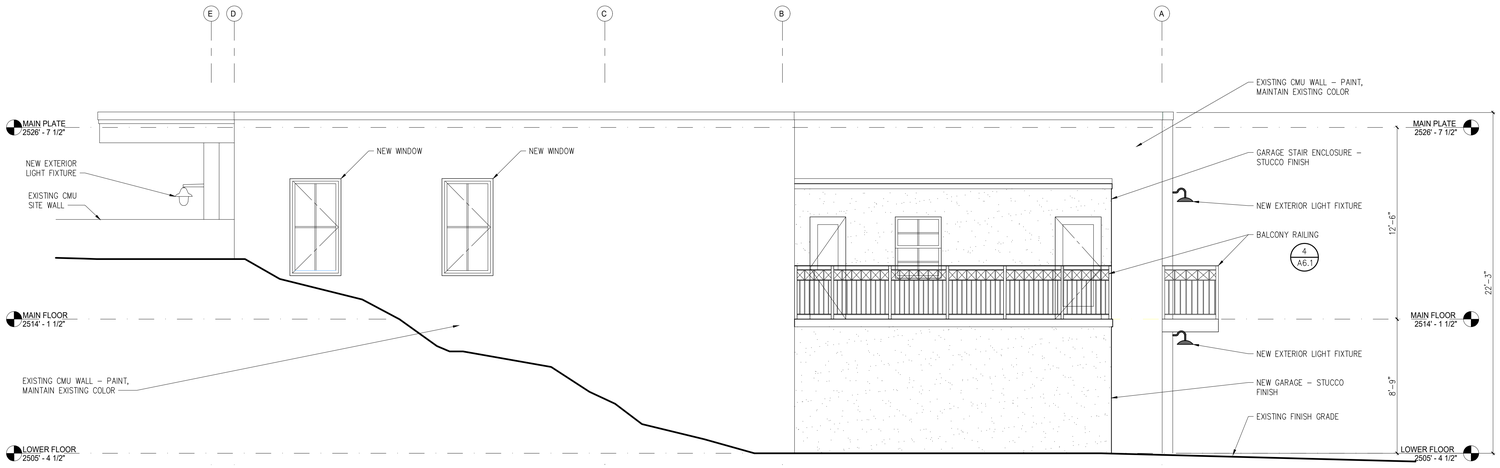

4 WEST ELEVATION
SCALE: 1/4" = 1'-0"

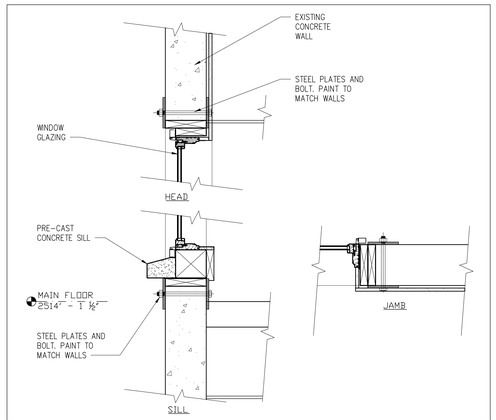

5 WINDOW INSTALLATION
SCALE: 1"=1'-0"

MATERIALS LIST

NOTE: THE FOLLOWING IS A SUMMARY OF THE PROPOSED EXTERIOR MATERIALS. HATCHES SHOWN MAY NOT BE TO SCALE. ALL EXTERIOR MATERIALS TO BE VERIFIED BY OWNER.

ENTRY FASCIA: EXISTING, TO REMAIN

STOREFRONT WINDOWS: EXISTING, TO REMAIN

WINDOWS: ANDERSON E-SERIES, DARK BRONZE METAL CLAD WOOD WITH SIMULATED DIVIDED LITES PER ELEVATIONS (7/8" WIDE MULLIONS, MIN.).

CMU BLOCK: BASALITE SHOT BLAST COLOR 790 OR 791. PAINT TO MATCH EXISTING

STONE VENEER: EXISTING, TO REMAIN

GARAGE DOOR: NICKSBUILDING.COM HERITAGE KNOTTY CEDAR, NO LITES COLOR - NATURAL WITH VAN DYKE BROWN GLAZE, LIGHT DISTRESSED

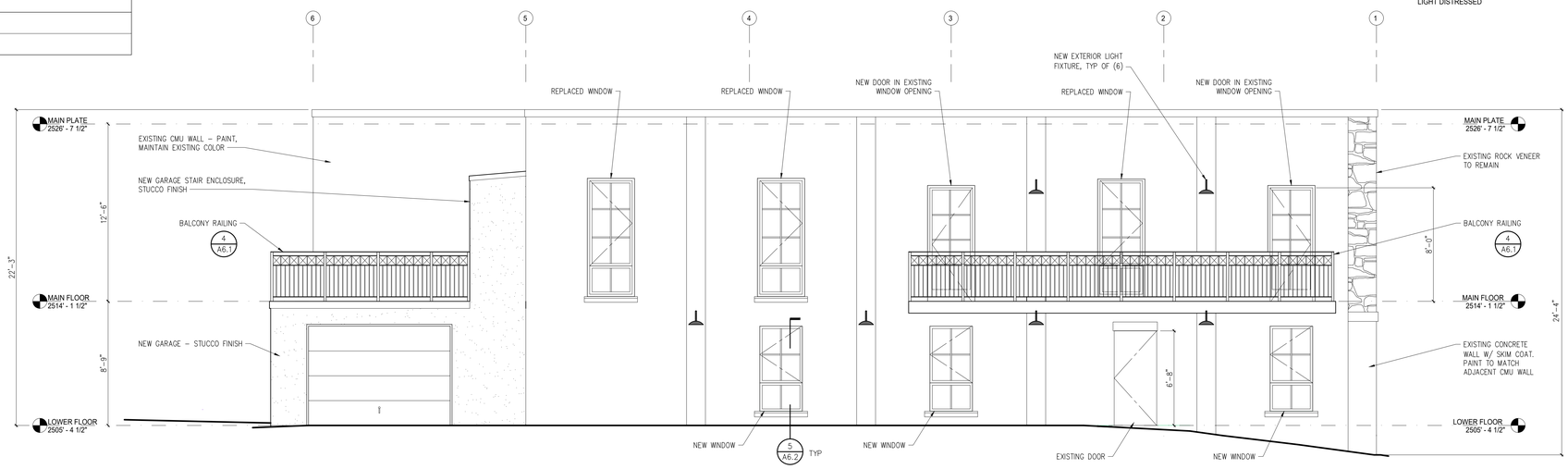

3 SOUTH ELEVATION
SCALE: 1/4" = 1'-0"

DWG. STATUS/REVISIONS	
△	1/6/2020 PLANNING SUBMITTAL

PROJECT:

224 CHURCH ST.
TENANT IMPROVEMENT

APN: 005-390-004

OWNER:

JOHN CONGER
224 CHURCH STREET
NEVADA CITY, CALIFORNIA 95959

DRAWN:	W.J.R.
CHECKED:	C.W.A.
DATE:	1/6/2020
SCALE:	AS NOTED
JOB NO.:	19035

EXTERIOR ELEVATIONS

A6.2

C.H.I. OVERHEAD DOORS

FULL-VIEW ALUMINUM

THE QUALITY GARAGE DOOR™

FULL-VIEW ALUMINUM

A dramatic statement, made to fit your contemporary garage door application. Our full-view aluminum garage doors are expertly engineered of aluminum and glass that will give your home the perfect blend of industrial and ultra modern.

3295 shown in clear anodized with optional frosted glass

KEY FEATURES

INSULATION

Optional insulated section rails are available providing additional therrmal protection for your garage space.

BULB SEAL

Integrated bulb seal eliminates air and water infiltration keeping your interiors protected from the unwanted elements.

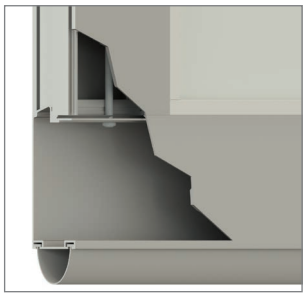

SECTION CONSTRUCTION

Rail and stile sections are assembled with through bolts for added strength and longevity.

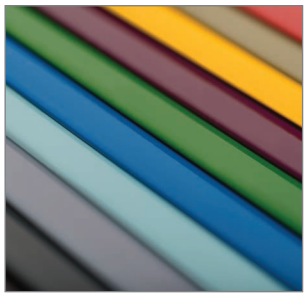

POWDER COATING

Choose from 188 color options that provide a maintenance free, durable finish.

ASTM INTERNATIONAL

Enjoy the view but keep the noise out!
C.H.I Full-View Aluminum doors have been tested and certified for an STC (sound transmission class) Rating of 27.

PERSONALIZING OPTIONS

Choose from a variety of personalizing options to complement your home's design and create immediate curb appeal.

FINISH

Clear Anodized

SUPER DURABLE POWDER COAT COLORS *All powder coat colors add 1-week lead time*

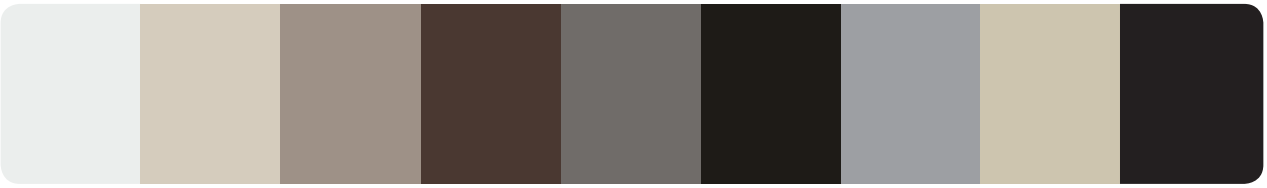

White | Almond | Sandstone | Brown | Bronze | Dark Bronze | Gray | Desert Tan | Black

GLASS

Plain | Frosted | Tinted | Obscure

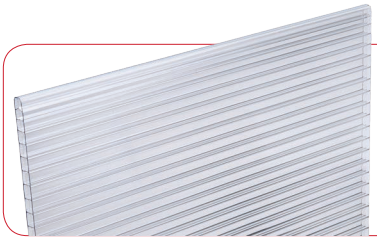

ADDITIONAL GLASS & PANEL OPTIONS

In addition to our standard glass offering, customize your door with specialty glass, solid panels or special materials. Contact your C.H.I. Dealer for options and details.

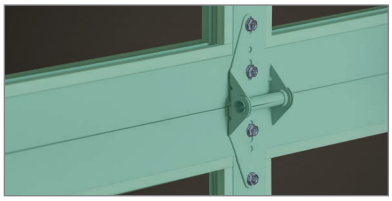

APPEARANCE PACKAGE

All hardware, including struts and track, is powder coated, creating a complete garage door system with a lasting impression.

Full-View Aluminum Model Comparison Chart

	BETTER	BEST
Section Construction	2" Thick - Hollow aluminum rails with through bolt assembly and bulb seal between sections	2" Thick - Insulated aluminum rails with through bolt assembly and bulb seal between sections
Section Material	Heavy Duty - Aluminum	Heavy Duty - Aluminum
Insulation Type	No Insulation	Polystyrene Insulation
Panel Style / Model Number[2]		
Full-View	**3295**	**3297**
Personalizing Options		
Powder Coating[1]	188 Colors	188 Colors
Windows	•	•
Solid Panels	Insulated or Non-Insulated	Insulated or Non-Insulated
Glass	•	•
Warranty	Limited Lifetime Warranty	

1 Refer to your local C.H.I. Dealer for exact color match. **2** Model number indicates insulation type.

LIMITED LIFETIME WARRANTY

SECTIONS **Limited Lifetime**

SPRINGS **3 Years**

HARDWARE **6 Years**

C.H.I. OVERHEAD DOORS | DOORVISIONS

Bring your vision to life.

C.H.I. DEALERS

A BETTER BUYING EXPERIENCE

All C.H.I. doors, replacement parts, and accessories are sold only through our network of C.H.I. dealers: dedicated professionals who install and service our doors with the same quality and workmanship we use to manufacture them.

chiohd.com | 1485 Sunrise Drive | Arthur, IL 61911 | USA

Your Local Garage Door Professional

All information presented is based on the specifications and features available at the time of printing and is subject to change without notice.

CHI051 202-190052 0731 V1 20K / ©2019 C.H.I. Overhead Doors

City of Nevada City

TO: Planning Commission

FROM: Amy Wolfson, City Planner

MEETING DATE: January 16, 2020

APPLICANT: Kirk and Deanna McGuire, property owner

RE: **Application for Architectural Review at 632 Zion Street**

ATTACHMENTS:

1. Application (Architectural Review)
2. Site Plan and Elevations
3. Site Photos
4. Manufacturer's Spec Sheets: Hardie, Milguard
5. Design Guidelines Section 5.0: Architectural Review Outside the Historical District

ACTIONS REQUESTED

1. Approve Architectural Review application

SITE DEVELOPMENT STANDARDS

Lot Size: 0.26 acres
Zoning: R1: Single-Family Residential
Setbacks: Front yard: 30-ft, Rear Yard: 25-ft, Interior side yards: 5-ft, Corner Side: 10-feet

Lot Coverage: 50%
Building Height: 35-feet
Historical District: Outside

BACKGROUND: The subject property is developed with an existing 685 square foot unit in 1942 according to the property owners, Kirk and Deanna McGuire. They are proposing to construct a new primary unit and convert the existing unit to an Accessory Dwelling Unit pursuant to a pending Ordinance that is going for a second reading before City Council at their January 22, 2020 meeting, to go into effect 30 days after adoption.

PROJECT PROPOSAL: The proposed residence will be 1,288 square feet in size and will be on-story. The roof material will be composition shingle and siding is proposed to be a horizontal Hardie lap siding on the front, vertical siding on the sides and rear. Windows will be single-hung, vinyl material The front gable roof pitch facing the road will be pitched at 7:12, consistent with Design Guidelines for Nevada City style architecture. The property is consistent with all site development standards including property line setbacks, and sensitive resource setbacks.

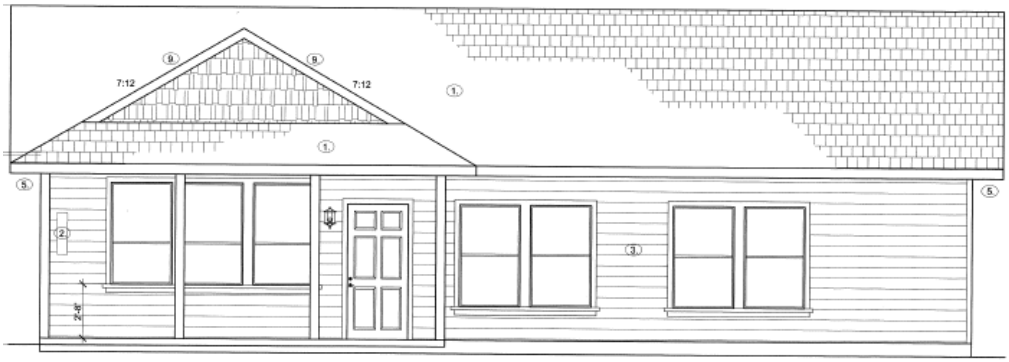

Front Elevation (facing Zion Street)

Material Details:

Windows
Vinyl single-hung

Siding
Hardie-lap

Roofing
Composition Shingle

REGULATORY CONSIDERATIONS:

Architectural Review: The Planning Commission, in their role as the Architectural Review Committee, is required to review proposals for the erection or exterior alterations of any structure, or the remodel, demolition, or razing of any structure. Findings must be made that the structure is generally compatible with Nevada City style architecture and compatible with the surrounding neighborhood.

Second Dwelling Unit: The applicant is also proposing to convert the existing unit to an Accessory Dwelling Unit (ADU) pursuant to a pending Ordinance update that will be codified under Section 17.72.023 in the City municipal Code. ADU's that meet the standards of that section are required to be ministerally processed provided they are compatible with the architecture of the primary dwelling. Many of the pictures attached to the staff report show the existing dwelling unit.

Environmental Review: Because a residence meets criteria in the R1 zoning designation, as an allowed use on the property, local authority can only be ministerial in nature. Sections 21080 of the Public Resource Code, of the California Environmental Quality Act (CEQA), exempts ministerial projects from environmental review.

RECOMMENDED MOTION:

1) Make a Motion to Approve the Architectural Review Application subject to the above Conditions of Approval or as modified, making findings a and b, Sections 17.88.040 of the City Municipal Code:
   a) That the proposed residential structure is generally compatible with Nevada City style architecture; and

   b) That the proposed residence is compatible with the context of the surrounding neighborhood; and

RECOMMENDED CONIDTIONS OF APPROVAL:

1. Nevada City contracts with the Nevada County Building Department for issuance of permits. The County will not issue permits unless the plans have been stamped and approved by Nevada City.

Therefore, prior to issuance of a building permit, submit three sets of plans to Nevada City Planning Department, along with a filing fee of $100 (made payable to the City of Nevada City). The plans will be reviewed by the City Planner and City Engineer for consistency with the approval and will require their signatures.

2. All improvements shall substantially comply with the exhibits presented to the Planning Commission.

3. A Planning Commission member shall be appointed as a Liaison to assist the applicant with any minor modifications to the permit, if needed.

OFFICE USE ONLY	
Filing Fees	
Chk	Cash
Bus. Lic.	

CITY OF NEVADA CITY

317 Broad Street • Nevada City, California 95959 • (530) 265-2496

RCPT. AMT.
DEC 27 2019
CITY OF NEVADA CITY

2nd DWELLING UNIT ARCHITECTURAL REVIEW

Applicant/Property Owner

Kirk & Deanna McGuire
Name

12945 Wings of Morning Dr
Address

Nevada City, CA. 95959
City, State

530.265.9292
Phone

Check all that apply:

- ☑ A New Building
- ☐ 2nd unit within existing residence
- ☐ In the Historic District
- ☑ Other (Describe) new unit to be primary

Supporting data must be attached:

- *Color chips*
- *Material specs, i.e. roofing, windows, etc.*
- *Elevations/Site plans- 3 folded copies*

Address and Assessor's parcel number of property where construction is proposed (also complete attached location key map):

632 Zion Street
Street Address

05-230-10
Assessor's Parcel Number

Nearest cross street _____

New floor area proposed 1288 S.F.

Briefly describe proposed project:

We propose to construct a 1288 ☐, 3 bed, 2 bath residence, That will be classified as the primary residence. The existing 648 ☐ house will now be considered the second dwelling

Number of buildings on property 1

Year of original construction 1942

Square footage of existing residence 648

I am the owner(s) or authorized agent for the subject property.

Kirk McGuire
Signature

12/27/19
Date

Deanna McGuire
Signature

12/27/19
Date

SUPPORTING DATA

Attach **THREE FOLDED COPIES** of the elevations and/or supporting information, including a site plan showing the existing and proposed building setbacks from all property lines. **ALL BUILDING DIMENSIONS, INCLUDING BUILDING HEIGHTS AND BUILDINGS SHOWN AT GRADE, MUST BE SHOWN ON THE ELEVATIONS.**

SITE PLAN AND ENVIRONMENTAL CONSIDERATIONS:

Is the coverage and setback of the new construction compatible with surrounding houses? Site Plan shall show that coverage of all buildings does not exceed 50% ☑ Yes ☐ No

If no, please explain _____

VOLUME AND MASSING — Lot Size 11,520 SF

Will the proposed building or changes	Yes	No
Have a larger floor plan than surrounding buildings?	☑	☐
Be taller than surrounding buildings?	☑	☐ Barely
Block views or sunshine from existing buildings?	☐	☑
Does the site plan provide a private yard area?	☑	☐

Discussion, if needed:

PARKING PLAN The 2nd unit shall have one off-street parking space. Please indicate this on the site plan. Also indicate the required two, off-street parking spaces for the main home on the site plan.

MATERIALS

Please list all materials that will be similar to or compatible with the main residence:

Roof:	Comp Roof	Existing home:	Comp roof
Pitch:	6/12 primarily	Existing home:	6/12
Siding:	Hardie Horizontal lap (Front)	Existing home:	Wood - Horizontal lap
Windows:	Vinyl S Hung primarily	Existing home:	Wood Single hung
Trim:	Wood - Advantage pine	Existing home:	Wood - fir ?
Decks, porches, railings:	front - Cement	Existing home:	~~N/A~~ Front - cement

rear composite decking w/ ornamental steel railing Builders grade

COLORS (Please provide color chips of each color)

Color brand, name, number

Roof: GAF Ultra HD Dimensional Barkwood Comp 3 tab

~~Trim~~ Body: 217 - Chadwick K.M.

~~Accents~~ Trim: KM4598 Mexican Sand Dollar

Railings/Decks: RDI Black powdercoat railings N/A

Do these colors match the existing home? If not, how do they differ? Similar Tones but darker shades Roofing is more of a brown tone as opposed to the grey/green on the existing

DETAILS

Please provide sufficient information to allow review of the building's details, including:

- Foundation, rock work or veneer accents
- Vents and flues
- Door and window materials, trim and design detail
- Porch and deck framing and railing details
- Garage door

OTHER APPLICABLE INFORMATION

Please complete the attached location key, Use the space below to provide any additional information for the Planning Commission.

STAPLE HERE --------- STAPLE HERE --------- STAPLE HERE --------- STAPLE HERE --------- STAPLE HERE

WILDLAND-URBAN INTERFACE FIRE ZONE REQUIREMENTS R337

The enforcement of *defensible space and inspection shall be performed by the local fire jurisdiction having authority.*

1- prior to building permit final approval, the property shall be in a compliance with the vegetation management requirements prescribed in california fire code section 4906, including california public resources code 4291 or california government code section 51182 per crc r337.

2- where the roof profile allows a space between the roof covering and roof decking, the space shall be constructed to prevent the intrusion of flames and embers, be fire stopped with approved materials or have one layer of minimum 72 pounds mineral-surfaced non-perforated cap sheet installed over the combustible decking per crc R337.

2a- Roofing: Min. Class A. Install in accordance with list and manufacture's installation instructions. R337, R902

3- valley flashing is installed, the flashing shall not be less than no. 26 gage galvanized sheet corrosion-resistant metal installed over not less than on layer of minimum 72-pound mineral-surfaced non-perforated cap sheet, at least 36 inch wide running the full length of the valley per crc r337.

4- Roof gutters shall be provided with the means to prevent the accumulation of leaves and debris in the gutter per CRC R337.

5- Ventilation openings for enclosed attics, enclosed eave soffit spaces, enclosed rafter spaces formed where ceilings are applied directly to the underside of roof rafters, and under floor ventilation openings shall be fully covered with metal wire mesh, vents, other materials or other devices that meet the following requirements per CRC 337.:
a. The dimensions of the openings shall be a minimum of 1/16th inch and shall not exceed 1/8th inch.
b. The materials used shall be noncombustible and corrosion resistant.

6- Vents shall not be installed on the underside of eaves and cornices, unless they are flame and embers resistance, per CRC 337.

7- The exterior wall covering or wall assembly shall comply with one of the following requirements per CRC R337.: Identify which method below will be utilized.
a. Noncombustible material
b. Ignition-resistant material
c. Heavy-timber exterior wall assembly
d. Log wall construction assembly
Wall assemblies that meet the performance criteria in accordance with the test procedures for a 10-minute direct flame contact exposure test set forth in SFM Standard 12-7A-I.

8- Exterior wall coverings shall extend from the top of the foundation to the roof, and terminate at 2 inch nominal solid wood blocking between rafters at all roof overhangs, or in the case of enclosed eaves, terminate at the enclosure per CRC R337.

9- The **exposed roof deck on the underside** of enclosed roof eaves shall consist of one of the following per CRC 337.:
a. Noncombustible material
b. Ignition-resistant material
c. On layer of 5/8" Type 'X' gypsum **sheathing** applied behind an exterior covering on the underside exterior of the roof deck.
The exterior portion of a 1-hour fire resistive exterior wall assembly applied to the underside of the roof deck designed for exterior fire exposure including assemblies using the gypsum panel and sheathing products listed in the Gypsum Association Fire Resistant Design Manual.

10- 1. The exposed underside of **enclosed roof eaves** having either a boxed-in roof eave soffit with a horizontal underside, or sloping rafter tails with an exterior covering applied to the underside of the rafter tails, shall be protected by one of the following per CRC R337.:
a. Noncombustible material
b. Ignition-resistant material
c. One layer of 5/8" Type 'X' gypsum sheathing applied behind an exterior covering on the underside of the rafter tails or soffit.
d. The exterior portion of a 1-hour fire resistive exterior wall assembly applied to the underside of the rafter tails or soffit including assemblies using the gypsum panel and sheathing products listed in the Gypsum Association Fire Resistant Design Manual.
e. Boxed-in roof eave soffit assemblies with a horizontal underside that meet the performance criteria in accordance with the test procedures set forth in SFM Standard 12-7A-3.

11- The exposed underside of **exterior porch ceilings** shall be protected by one of the following per CRC R337.:
a. Non combustible material
b. Ignition-resistant material
c. One layer of 5/8" Type 'X' gypsum sheathing applied behind the exterior covering on the underside of the ceiling
d. The exterior portion of a 1-hour fire resistive exterior wall assembly applied to the underside of the ceiling assembly including assemblies using the gypsum panel and sheathing products listed in the Gypsum Association Fire Resistant Design Manual
e. Porch ceiling assemblies with a horizontal underside that meet the performance criteria in accordance with the test procedures set forth in SFM Standard 12-7A-3.
1. The exposed underside of **exterior porch ceilings** shall be protected by one of the following per CRC R337.:

12- Exterior windows and exterior glazed door assemblies shall comply with one of the following requirements per CRC R337.:
a. Be constructed of multi-pane glazing with a minimum of one tempered pane meeting the requirements of Section 2406 Safety Glazing, or
b. Be constructed of glass block units, or
c. Have a fire-resistant rating of not less than 20 minutes when tested according to NFPA 257, or
d. Be tested to meet the performance requirements of SFM Standard 12-7A-2.

13- Exterior doors shall comply with one of the following per CRC 337.:
a. The exterior surface or cladding shall be of non combustible or ignition-resistant material, or
b. Shall be constructed of solid core wood that comply with the following requirements:
i. Stiles and rails shall not be less than 1 3/8 inches thick
ii. Raised panels shall not be less than 1 ¼ inches thick, except for the exterior perimeter of the raised panel that may taper to a tongue not less than 3/8 inch thick.
c. Shall have a fire-resistant rating of not less than 20 minutes when tested according to NFPA 252
d. Shall be tested to meet the performance requirements of SFM Standard 12-8A-1.

14- Deck, porch, balcony, and stair walking surface s shall be ignition resistant compiling with SFM 12-7A-4 & SFM 12-7A-5, fire retardant treated wood or non combustible material.

15- All exterior materials shall comply with section R337, Materials and Methods for Wildfire Exposure.

VICINITY MAP

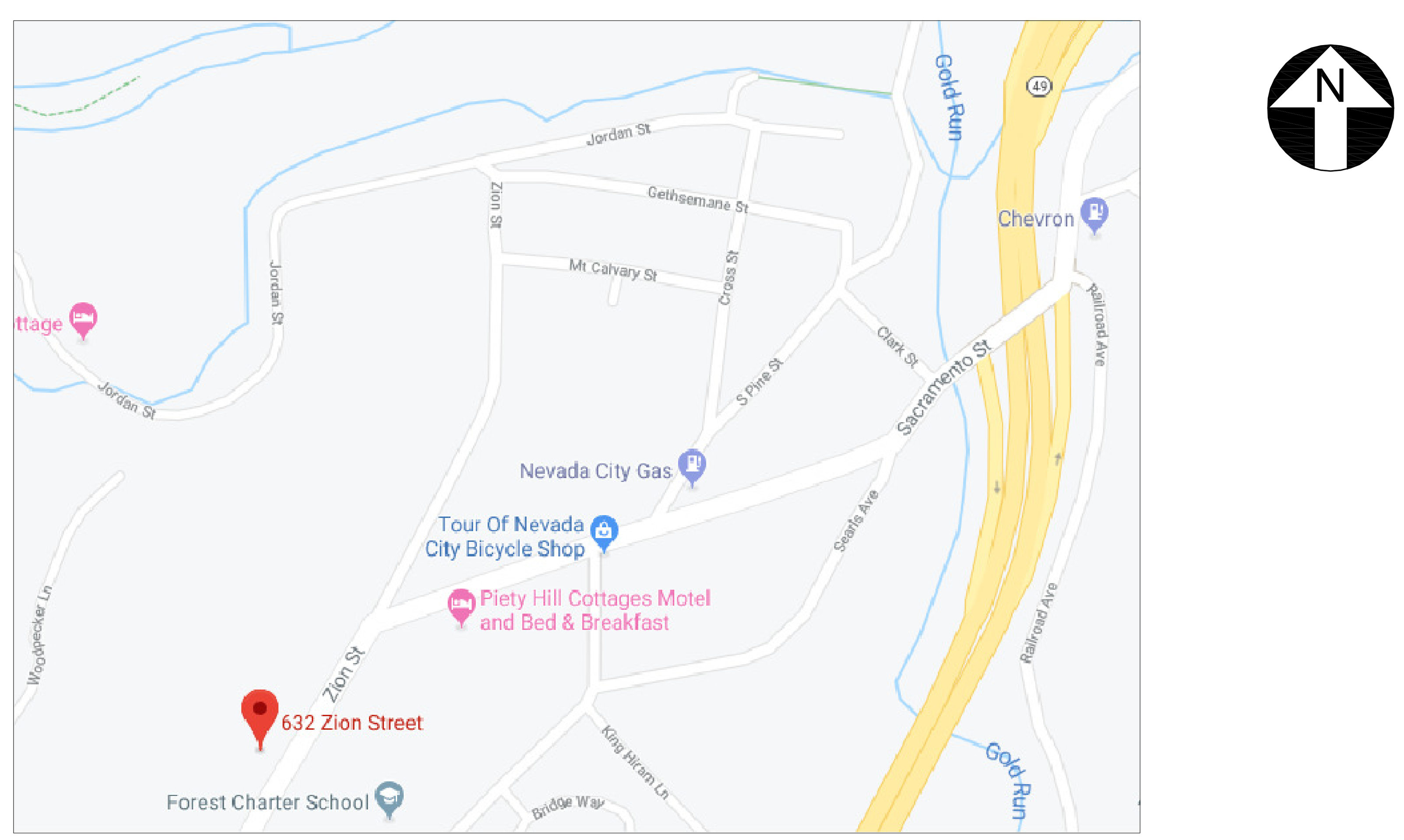

ADDITIONAL COMMENTS

GENERAL ABBREVIATIONS

A/C: AIR CONDITIONER
A.F.F.: ABOVE FINISHED FLOOR
A.F.G.: ABOVE FINISHED GRADE
AWG: AMERICAN WIRE GAUGE
B.O.F.: BOTTOM OF FOOTING
B.O.W.: BOTTOM OF WALL
BP: BLUE PRINT (OR B/P)
BV: BUTTERFLY VALVE
C.C.: CENTER TO CENTER
C.F.M.: CUBIC FEET PER MINUTE
C.F.S: CUBIC FEET PER SECOND
CL: CENTER LINE
CLG.: CEILING
CMU: CONCRETE MASONRY UNIT
C.O.: CLEANOUT
CONT.: CONTINUOUS
CU. FT.: CUBIC FEET
CU. YD.: CUBIC YARD
D.S.: DOWNSPOUT
DIA.: DIAMETER
DIM.: DIMENSION
DN.: DOWN
ED: EDGE DISTANCE
E.F.: EXHAUST FAN
EQ: EQUAL, OR EQUALLY
EXC: EXCAVATE
E.W.: EACH WAY
EXT.: EXTERIOR
F.C.O.: FLOOR CLEANOUT
F.D.: FLOOR DRAIN
F.F.L.: FINISHED FLOOR LEVEL
FL: FLOOR LEVEL
FRPF: FIREPROOF
GALV.: GALVANIZED
G.C.: GENERAL CONTRACTOR
G.F.C.I. OR G.F.I.: GROUND-FAULT CIRCUIT-INTERRUPTER
GPM: GALLONS PER MINUTE
GYP.: GYPSUM
H.B.: HOSE BIB
HDCP: HANDICAPPED (BETTER IF REFERRED TO AS "ACCESSIBLE")
HDPE: HIGH-DENSITY POLYETHYLENE
HV: HIGH VOLTAGE
H.V.A.C.: HEATING, VENTILATION, AND AIR CONDITIONING
H.W.: HOT WATER
IN.: INCH
INSUL.: INSULATION
J-BOX: JUNCTION BOX
JST.: JOIST
KW: KILOWATT
LFT.: LINEAR FEET
LL: LIVE LOAD
LTG.: LIGHTING
LVL: LAMINATED VENEER LUMBER
MH: MANHOLE
MAX: MAXIUMUM
MTL.: MATERIAL
MFG.: MANUFACTURING
MIN.: MINIMUM
NOM: NOMINAL
N.T.S.: NOT TO SCALE
O.C.: ON CENTER
O.D.: OUTSIDE DIAMETER
OPNG.: OPENING OR ROUGH OPENING
PCC: PORTLAND CEMENT CONCRETE
P.L.: PROPERTY LINE (OR PARTS LIST)
PLYWD.: PLYWOOD
P.S.F.: POUNDS PER SQUARE FOOT
P.S.I.: POUNDS PER SQUARE INCH
PVC: POLYVINYL CHLORIDE
QTY: QUANTITY
R: RADIUS
RC: REINFORCED CONCRETE
RD: ROOF DRAIN, ROUND, OR RECEPTACLE DISTRIBUTION PANEL
REBAR: REINFORCING BAR
REQD: REQUIRED
R.O.: ROUGH OPENING
R.O.W.: RIGHT OF WAY
REINF.: REINFORCED
S.D.: SMOKE DETECTOR
SECT.: SECTION
SHT.: SHEET
SHT'G.: SHEATHING
SPECS.: SPECIFICATIONS
SQ. FT.: SQUARE FEET
SQ. IN.: SQUARE INCHES
SS: STAINLESS STEEL, SETSCREW, SOIL STACK, SERVICE SINK, OR SLOP SINK
STD.: STANDARD
STL: STEEL
S.Y.: SQUARE YARD
T&B: TOP AND BOTTOM
T&G: TONGUE AND GROOVE
T.O.B.: TOP OF BEAM
T.O.C.: TOP OF CURB OR TOP OF CONCRETE
T.O.F.: TOP OF FOOTING
T.O.J.: TOP OF JOIST
T.O.M.: TOP OF MASONRY
T.O.W.: TOP OF WALL
UON: UNLESS OTHERWISE NOTED
VA.: VOLTAGE
V.B.: VAPOR BARRIER
V.I.F.: VERIFY IN FIELD
W.C.: WATER CLOSET (TOILET)
WD.: WOOD
WDW.: WINDOW
W.I.: WROUGHT IRON
W.I.C.: WALK-IN CLOSET
WL: WATER LEVEL
W/O: WITHOUT
WP.: WEATHERPROOF
WT.: WEIGHT
HW. : WATER HEATER

ADDRESS

NEW CONSTRUCTION
632 ZION STREET
NEVADA CITY, CA

CONTACT INFORMATION

PLAN DESIGN / DRAFTING
DR DESIGNS
DUSTIN@DRDESIGNSNC.COM
WWW.DRDESIGNSNC.COM
(530) 559-2539

CONTRACTOR

KIRK MIGUIRE
SPECWEST@SBCGLOBAL.NET
530-913-9100

TITLE 24

GARY FAUCETTE
GARY@AVENERGY-ASSOCIATES.COM
661-723-6694

SCOPE OF WORK

- NEW CONSTRUCTION
- DISCONNECT EXISTING OVERHEAD
- NEW DWELLING TO BECOME PRIMARY DWELLING OF A TWO UNIT LOT, EXISTING DWELLING WILL BECOME A SECONDARY DWELLING UNIT.

COMPLIANCE

CODE COMPLIANCE

THIS PLAN SET IS DESIGNED TO COMPLY WITH 2016, CRC, CMC, CPC, CEC, AND 2016 CALIFORNIA ENERGY COMPLIANCE OF TITLE 24. CALIFORNIA BUILDING CODE & 2016 CALIFORNIA GREEN BUILDING STANDARDS CODE

ENERGY COMPLIANCE

WALL	R21
CEILING	R38
WINDOW "U" VALUE	0.32
SHGC	0.25
HOT WATER SYSTEM	TANK LESS GAS

GENERAL INFORMATION

APN#	005-230-010-000
COUNTY / CITY	NEVADA COUNTY
OCCUPANCY	R1, U
SEISMIC CATEGORY	D
CLIMATE ZONE	11
WIND EXPOSURE	C
GROUND SNOW LOAD	29 LBS/SF
FIRE SPRINKLERS NEEDED	NO

2016 CRC FIRE PROTECTION REQUIREMENTS

Per 2016 CRC R302.1(2), R302.4, CEC 110.26

- Fire Separation Distance shall be measured from the face of foundation wall to the property line.
- The service panel shall have working clearance in front of the panel. Clearances shall be 30" wide by 36" deep with a minimum headroom clearance of 6'-6". (Article 110.26)
- Walls less than 5' to the property line shall be protected with 1 hour fire resistive construction. **(new code change) Unprotected roof overhangs are permitted to extend to within 2' of the property line when fire blocking is installed between the top of the wall and roof sheathing.** Overhangs are not allowed to be closer than 2 feet to a property line. R302.1 (1) Openings in walls are not allowed to be less than 3' to the property line. All penetrations less than 3' to the property line shall comply with R302.4. Please provide all appropriate details on the plan.

SHEET INDEX

A1.1	COVER PAGE
A1.2	CONSTRUCTION DOCUMENTS
AG	CAL GREEN COMPLIANCE
A2	SITE PLAN
T24	TITLE 24 CF1R
A3	FLOOR PLAN
A4.1	ELEVATIONS
A4.2	
A5	SECTION
E1	ELECTRICAL
M1	MECHANICAL
SE1	SHEAR WALL / BRACED WALL
SE2	FOUNDATION
SE3	FRAMING
AD1	DETAILS

FOOTAGE

LIVING SPACE

FIRST FLOOR LIVING	1288 SF
ADDITION	NA SF
REMODEL (NO SF CHANGE)	NA SF
RESTORATION (NO SF CHANGE)	NA SF
SUB TOTAL LIVING SPACE	***1288 SF***

NON LIVING SPACE

GARAGE	NA SF
SHOP / WORKSHOP	NA SF
STORAGE	NA SF
REAR PORCH SPACE	0128 SF
FRONT PATIO SPACE	0120 SF
SUB TOTAL NON LIVING SPACE	***0248 SF***
STRUCTURAL FOOTPRINT	***1536 SF***

PRIME CONTRACTOR RESPONSIBILITIES

THE FOLLOWING ARE CONDITIONS ***MAY*** BE NEEDED FOR THE PRIME CONTRACTOR(S) TO GET INFORMATION ABOUT. CONDITIONS ON THE PROJECT ARE NOT LIMITED TO THESE NOR SPECIFIC TO THESE RESPONSIBILITIES. THIS IS A GENERAL GUIDELINE FOR THE PRIME CONTRACTOR(S) AS TO AID THE CONSTRUCTION OF THIS PROJECT.
"NOT ALL OF THESE CONDITIONS WILL BE APPLICABLE TO EVERY PROJECT"

- VERIFY TOP PLATES OF EXISTING AND/OR NEW PRIOR TO THE CONSTRUCTION.
- VERIFY EXISTING WALL SPAN AND/OR TRUSS SPAN PRIOR TO THE CONSTRUCTION.
- VERIFY THE EXISTING FINISH FRAMED FLOOR AND/OR NEW FINISH FRAMED FLOOR PRIOR TO THE CONSTRUCTION.
- VERIFY EXISTING FINISH FRAMED CEILING AND/OR NEW FINISH FRAMED CEILING PRIOR TO THE CONSTRICTION.
- VERIFY ALL PLACED HOLDOWNS AND ANCHOR BOLTS AND/OR APPROVED PLANS PRIOR TO THE CONCRETE PLACEMENT.
- VERIFY FOUNDATION LOCATION PER SITE PLAN PRIOR TO THE CONCRETE PLACEMENT.
- VERIFY REQUIRED OPEN TO FRAME OF EXISTING & NEW WINDOWS WITH MANUFACTURE PRIOR TO THE WINDOW ORDERING.

WRITTEN DIMENSIONS SHALL HAVE PRECEDENCE OVER SCALE DIMENSIONS. contractors and home owner builders shall verify and be responsible for dimensions and conditions of the project. DR Designs must be notified of any variation from the dimensions, conditions and specifications appearing on this plan.

DR DESIGNS
(530) 559 - 2539

NEW CONSTRUCTION

632 ZION STREET
NEVADA CITY, CA

COVER SHEET

DUSTIN RUCKMAN

REVISIONS

1	
2	

APN# 005-230-010-000

19-0076 | 12/27/2019

A1.1

STAPLE HERE
STAPLE HERE
STAPLE HERE
STAPLE HERE
STAPLE HERE
STAPLE HERE

GENERAL NOTES (TYPICAL)

1. Provide each bedroom, basement, and habitable attics with a minimum of one exterior window with a 44" maximum clear opening height, 5.7 sq. ft. minimum clear openable area (minimum 5.0 sq. ft. at grade floor openings), 24" minimum clear openable height and 20" minimum clear width, or an openable exterior exit door. (CRC R310.2.1 and CRC R310.2.2) Window wells, ladders, and steps shall comply with CRC R310.2.3. Bars, grilles, covers, and screens shall be releasable or removable from the inside without the use of a key, tool, special knowledge, or force greater than 15lbs to oper- ate the emergency escape and rescue openings. (CRC R310.4)

2. Each bathroom containing a bathtub, shower or tub/shower combination shall be me- chanically ventilated with Energy Star approved equipment (minimum 50cfm) with an integral humidistat installed. (CRC R303.3.1)

3. Provide attic cross ventilation: 1/150 of attic area or 1/300 with at least 40% but more than 50% of vents are 3 ft. above eave and balance is at eave. As an alternative in Climate Zone 16 (Truckee region), the net area may be reduced to 1/300 when a Class I or II vapor barrier is installed on the warm-in-winter side of the ceiling. Baffles are required at vents for insulation. Provide minimum of 1" inch of air space between insu- lation and roof sheathing. (CRC R806)

4. Enclosed rafter spaces shall have 1 inch clear cross ventilation. (Properly sized rafters for insulation) (CRC R806.3)

5. Under floor cross ventilation: minimum 1.0 sq. ft. for each 150 sq. ft. of under floor area. When a class 1 vapor retarder is installed on the ground surface the minimum area of ventilation may be limited to 1sq.ft for each 1,500 square feet of under-floor space. One ventilation opening shall be within three (3) feet of each corner of the building (CRC R408.1). Unvented crawl spaces shall comply with CRC R408.3.

6. The following areas shall have safety glazing: (CRC R308.4)

- Sliding/swinging glass doors
- Glazing in walls and enclosures facing hot tubs, spas, whirlpools, saunas, steam rooms, bathtubs, showers and swimming pools where the glazing is less than 60 inches above the standing surface within the compartment and within 60 inches hori- zontally of the water's edge (CRC R308.4.5)
- Glazing within a 24" arc of a door that is less than 60 inches above the floor. Glazing installed perpendicular to a door in a closed position and within 24 inches of the door only requires safety glazing if it is on the hinge side of an inswing door. (CRC R308.4.2).
- Glazing where the exposed area is greater than 9sq.ft, bottom is less than 18 in. and at least 36 in. above the floor, and adjacent to a walking surface
- Within 60in. of the bottom tread of a stairway and less than 36in. above the landing
- Glazing in guards and railings
- Glazing adjacent to stairways, landings, and ramps within 36in. horizontally of the walking surface less than 36in. above the walking surface

7. Provide landings and a porch light at all exterior doors. Landings are to be minimum 3 ft deep x width of door. Landings at required egress doors may step down a maximum of 7.75 inches when the door does not swing over the landing and 1.5 inches when door swings onto the landing. Other than required exterior exit doors may have a threshold of 7.75 inches maximum; a landing is not required if a stair with two or fewer risers is located on the exterior side and the door does not swing over the stairway. (CRC R311.3-R311.3.2)

FOUNDATIONS & CONCRETE SLABS

1. Slope drainage 6" within the first 10ft. from the foundation wall. If physical obstruc- tions or lot lines prohibit the 10ft distance, a 2-5 percent slope shall be provided to an approved alternative method of diverting the water away from the foundation. Imper- vious surfaces shall also be sloped a minimum of 2 percent for 10ft away from struc- tures to an approved drainage way. (CRC R401.3)

2. Footings shall extend at least 12 inches into the undisturbed ground surface. (CRC R403.1.4) Unless erected on solid rock, to protect against frost and freezing, the mini- mum foundation depth is 18 inches below grade if between 4,000-7,000 foot elevation and 24 inches below grade for 7,000 foot elevation and above. Exception: Interior foot- ings shall be a minimum of 12 inches below grade. (L-V 3.14)

3. Stepped footings shall be used when slope of footing bottom is greater than 1 in 10 (V: H).

4. Concrete slabs: 3 ½" minimum (CRC R506.1). Slabs under living areas and garages shall be reinforced with wire 6" x 6", 10 gauge x 10 gauge welded mesh or equivalent steel reinforcement and 4" thickness of 3/8 minimum gravel under the concrete slab. Separate from soil with a 6 mil polyethylene vapor retarder with joints lapped not less than 6 inches in living areas. A capillary break shall be installed when a vapor retarder is required.

5. Provide 18" X 24" foundation access through the floor or 16"X24" access through a perimeter wall. (CRC R408.4)

6. Minimum sill bolting: ½" anchor bolts or approved anchors at 6 ft. o.c. maximum for one-story (CRC R403.1.6). Use anchor bolts at 4 ft. o.c. maximum for three story con- struction. Embed bolts 7" minimum. The anchor bolts shall be placed in the middle third of the width of the plate. Locate end bolts not less than 7 bolt diameters, nor more than 12" from ends of sill members. In SDC D0 and above: Provide 3"X3"X0.229 plate washers on each bolt at braced or shear wall locations, standard cut washers shall be permitted for anchor bolts not located in braced/shear wall lines.

CLEARANCES AND TREATMENT FOR WOOD FRAMING

1. Weather exposed glu-lam, beams and posts shall be pressure treated or shall be wood of natural resistance to decay (CRC R317.1.3 & 5)

2. Columns exposed to the weather or in basements when supported on concrete pier or metal pedestals shall be pressure treated or natural resistance to decay unless the pier/pedestals project 1" above concrete or 6" above earth and the earth is covered by an approved impervious moisture barrier. (CRC R317.1.4 exc. 1)

3. Columns in enclosed crawl spaces or unexcavated areas located within the periphery of the building shall be pressure treated or natural resistance to decay unless the column is supported by a concrete pier or metal pedestal of a height 8" or more and the earth is covered by an impervious moisture barrier. (CRC R317.1.4 exc. 2)

4. Deck posts supported by concrete piers or metal pedestals projecting not less than 1" above a concrete floor or 6" above exposed earth. (CRC R317.1.4 exc. 3)

WALLS

1. Positive post to beam connection shall be provided to ensure against uplift and lateral displacement. (CRC R502.9 & CBC 2304.9.7)

2. All fasteners used for attachment of siding & into pressure treated lumber shall be of a corrosion resistant type (CRC R317.3).

3. Fire-block in concealed spaces of stud walls/partitions, vertically at ceiling/floor levels, & horizontally at 10ft. intervals. Fire-block at soffits, drop ceilings/similar locations & in concealed spaces at the top/bottom of stair stringers. (CRC R302.11)

4. Provide approved building paper under the building siding and approved flashing at exterior openings (CRC R703.2). Specify a minimum of 2 layers of Grade D paper un- der stucco and 2 layers of 15lb felt (or equivalent) under stone veneer.

5. Stucco shall have a minimum clearance to earth of 4 inches and 2 inches to paved sur- faces with an approved weep screed. (CRC R703.7.2.1) Masonry stone veneer shall be flashed beneath the first course of masonry and provided with weep holes immediately above the flashing. (CRC R703.8.5 and R703.8.6)

ROOF

1. Provide a minimum 22" x 30" access opening to attic (CRC R807); may be required to be 30"x30" to remove the largest piece of mechanical equipment per the California Mechanical Code.

2. Roof drains/gutters required to be installed per the California Plumbing Code with leaf/ debris protection also installed.

3. All roofing shall be tested/listed Class A minimum.

4. Asphalt shingles with sloped roofs 2/12 to 4/12 shall have two layers of underlayment applied per CRC R905.2.2.

GARAGE & CARPORT

1. Garage shall be separated from the dwelling unit & attic area by ½ inch gypsum board applied to the garage side. Garage beneath habitable rooms shall be separated by not less than 5/8" type X gypsum board. Structure supporting floor/ceiling assemblies used for required separations shall have ½" gypsum board installed minimum. Door openings from the garage to the dwelling shall be solid wood/steel doors or honeycomb steel doors not less than 1 3/8" thick or a 20 minute rated fire door. Doors shall be self-closing & self-latching. No openings directly into a sleeping room from the garage. When the dwelling and garage has fire sprinklers installed per R309.6 and R313, doors into the dwelling unit from the garage only need to be self-closing and self-latching. (CRC R302.5.1 & T-R302.6) (Carports open on two or more sides and no enclosed areas above do not require a separation)

2. Ducts penetrating the garage to dwelling separation shall be a minimum of 26 gauge with no openings into the garage. (CRC R302.5.2)

3. Penetrations through the garage to dwelling separation wall (other than ducts as listed above) shall be fire-blocked per CRC section R302.11, item #4.

4. Garage and carport floor surfaces shall be non-combustible material and slope to drain towards the garage door opening. (CRC R309.1)

5. Appliances and receptacles installed in garage generating a glow, spark or flame shall be located 18" above floor unless it is listed as flammable vapor ignition resistant. Provide protective post or other impact barrier from vehicles (CMC 308.0).

STAIRWAYS & RAMPS

1. Exterior stair stringers must be naturally resistant to decay or pressure treated. (CRC R317.1)

2. Rise shall be maximum 7.75"; Run shall be 10" minimum; headroom 6'-8" minimum; width 36" minimum, 31.5" between a handrail on one side and 27" with handrails on two sides. Variation between riser heights 3/8" maximum. A nosing not less than .75 inches but not more than 1.25 inches shall be provided on stairways with solid risers where the tread depth is less than 11 inches. The leading edge of treads shall project not more than 1.25 inches beyond the tread below. Open risers are permitted, provided the opening between the treads does not permit the passage of a 4" sphere. (Openings are not limited when the stair has a rise of 30" or less). (CRC R311.7)

3. Stairways with 4 or more risers shall have a handrail on one side 34" to 38" above the tread nosing. Circular handrails shall have an outside diameter of 1.25"-2"; if not circular, it shall have a perimeter dimension of 4"-6.25" with a maximum cross sectional dimension of 2.25". See R311.7.8.3 item# 2 for type II handrails with a parameter over 6.25". A minimum clearance of 1.5" shall be maintained from the wall or other surface. Handrails shall be returned, terminate in newel posts, or safety terminals. (CRC R311.7.8.2)

4. Guards shall be 42" minimum height (unless acting as a handrail/guard for a stairway; the guard height may be 34"-38" in height), with openings less than 4" inches clear (guards on the open sides of stairs may have 4 3/8" openings). (CRC R312)

5. Provide landings at the top/bottom of the stairway the width of the stairway. The depth of the landing shall be 36" minimum. (see CRC R311.7.6 for exceptions).

6. Usable spaces underneath enclosed/unenclosed stairways shall be protected by a minimum of ½" gypsum board. (CRC R302.7)

7. Ramps serving the egress door shall have a slope of not more than 1 unit vertical in 12 units horizontal (8.3-percent slope). All other ramps shall have a maximum slope of 1 unit vertical in 8 units horizontal (12.5-percent slope). Exception: Where it is technically infeasible to comply because of site constraints, ramps shall have a slope of not more than 1 unit vertical in 8 units horizontal (12.5-percent slope) (CRC R311.8.1). Provide 3'X3' landings at the top and bottom of ramps, where doors open onto ramps, and where ramps change directions. (CRC R311.8)

DECKS

1. Guards are required if deck or floor is over 30" above grade, minimum 42" high, with openings less than 4" (CRC R312). Guardrails shall be designed and detailed for lateral forces according to CRC Table 301.5.

2. Provide deck lateral load connections at each end of the deck and at deck intersections per CRC R507.2.4. Connectors shall have a minimum allowable stress design capacity of 1,500lbs and install with 24" of the end of the deck. 750lb rated devices are allowed (DTT1Z as example) if located evenly at 4 points along the deck.

3. Posts/columns shall be retrained at the bottom end to prevent lateral displacement; clearly show approved post bases, straps, etc to achieve this per CRC R407.3

4. Hardware and fasteners to be hot-dipped galvanized, stainless steel, silicon bronzed or copper. (CRC R317.3)

ELECTRICAL

1. No electrical panels shall be in closets of bathrooms. Maintain a clearance of 36" inches in front of panels, 30" wide or width of equipment and 6'-6" high for headroom (CEC 110.26).

2. A concrete-encased electrode (ufer) consisting of 20' of rebar or #4 copper wire placed in the bottom of a footing is required for all new construction. (CEC 250.52(A) (3) Bond all metal gas and water pipes to ground. All ground clamps shall be accessible and of an approved type. (CEC 250.104)

3. All 15/20 ampere receptacles installed per CEC 210.52 shall be listed tamper-resistant receptacles. (CEC 406.12)

4. All branch circuits supplying 15/20 ampere outlets in family rooms, dining rooms, living rooms, parlors, libraries, dens, bedrooms, sunrooms, recreation rooms, closets, hallways, kitchens, laundry room or similar rooms/areas shall be protected by a listed combination type arc-fault circuit interrupter. (CEC 210.12)

5. Provide a minimum of one 20A circuit to be used for the laundry receptacle. (CEC 210.11(c)(2)) Provide a minimum of one 20A circuit for bathroom receptacle outlets. (CEC 210.11(C)(3)

6. Provide at least 1 outlet in basements, garages, laundry rooms, decks, balconies, porches and within 3' of the outside of each bathroom basin. (CEC 210.52 (D), (F) & (G))

7. Furnaces installed in attics and crawl spaces shall have an access platform (catwalk in attics), light switch and receptacle in the space. Provide a service receptacle for the furnace. (CEC 210.63)

8. All dwellings must have one exterior outlet at the front and the back of the dwelling. (CEC 210.52(E))

9. Garage receptacles shall not serve outlets outside the garage. A minimum of 1 receptacle shall be provided for each car space. (210.52(G)(1))

10. A 15/20 amp receptacle shall be installed within 50ft of electrical service equipment. (CEC 210.64)

11. Kitchens, dining rooms, pantries, breakfast nooks, and similar areas must have a minimum of two 20A circuits. Kitchen, pantry, breakfast nooks, dining rooms, and similar areas counter outlets must be installed in every counter space 12" inches or wider, not greater than 4' o.c., within 24" inches of the end of any counter space and not higher than 20" above counter. (CEC 210.52 (C)) Island counter spaces shall have at least 1 receptacle outlet unless a range top or sink is installed than 2 receptacles may be required. 1 receptacle is required for peninsular counter spaces. Receptacles shall be located behind kitchen sinks if the counter area depth behind the sink is more than 12" for straight counters and 18" for corner installations. (CEC Figure 210.52(C)(1))

12. Receptacles shall be installed at 12' o.c. maximum in walls starting at 6' maximum from the wall end. Walls longer than two feet shall have a receptacle. Hallway walls longer than 10 ft shall have a receptacle in hallways. (CEC 210.52(A))

13. Receptacles shall not be installed within or directly over a bathtub or shower stall. (CEC 406.9(C) Light pendants, ceiling fans, lighting tracks, etc shall not be located within 3ft horizontally and 8ft vertically above a shower and/or bathtub threshold. (CEC 410.10(D))

14. All lighting/fan fixtures located in wet or damp locations shall be rated for the application. (CEC 410.10)

15. GFCI outlets are required: for all kitchen receptacles that are designed to serve countertop surfaces, dishwashers, bathrooms, in under-floor spaces or below grade level, in exterior outlets, within 6' of a laundry/utility/wet bar sinks, laundry areas, and in all garage outlets including outlets dedicated to a single device or garage door opener (CEC 210.8).

16. Carbon-monoxide alarms shall be installed in dwelling units with fuel-burning appliances or with attached garages (CRC R315):

- Outside of each separate sleeping area in the immediate vicinity of bedrooms
- On every level of a dwelling unit including basements
- Alterations, repairs, or additions exceeding 1,000 dollars (May be battery operated)

17. Smoke alarms shall be installed (CRC (R314):

- In each room used for sleeping purposes.
- Outside of each separate sleeping area in the immediate vicinity of bedrooms.
- In each story, including basements.
- Shall not be installed within 20ft horizontally of cooking appliances and no closer than 3ft to mechanical registers, ceiling fans and bathroom doors with a bathtub or shower unless this would prevent placement of a smoke detector (314.3(4))
- .Alterations, repairs, or additions exceeding 1,000 dollars. (May be battery operated)

18. All smoke and carbon-monoxide alarms shall be hardwired with a battery backup (smoke alarms shall have a 10-year sealed battery). (CRC R314.4 & R315.1.2)

19. All 15/20 ampere receptacles in wet locations shall have in-use (bubble) covers installed. All receptacles in wet locations shall also be listed weather-resistant type. (CEC 406.9(B)(1)

PLUMBING

1. Underfloor cleanouts shall not be more than 5 FEET from an underfloor access, access door or trap door. (CPC 707.9)

2. ABS piping shall not be exposed to direct sunlight unless protected by water based synthetic latex paints. (CPC 312.13)

3. PVC piping shall not be exposed to direct sunlight unless protected by water based synthetic latex paint, .04" thick wrap or otherwise protected from UV degradation. (CPC 312.14)

4. The adjacent space next to showers without thresholds shall be considered a "wet location" when using the CRC, CBC, and the CEC. (CPC 408.5)

5. Shower compartments, regardless of shape, shall have a minimum finished interior of 1024 square inches (32" by 32") and shall also be capable of encompassing a 30" circle. The required area and dimensions shall be measured at a height equal to the top of the threshold and shall be maintained to a point of not less than 70" above the shower drain outlet. (CPC 408.6) Provide curtain rod or door a minimum of 22" in width (CPC 408.5). Showers and tubs with showers require a non-absorbent surface up to 6' above the floor. (CRC R307.2)

6. Water Heaters: Provide pressure relief valve with drain to outside for water heater. (CPC 504.6) Provide seismic strapping in the upper & lower third of the water heater a minimum of 4" above controls. (CPC 507.2) The water heater shall be of an instantaneous type or the following shall be provided (new construction only) (CEC 150(n)):

- A 120V receptacles provided within 3ft
- A category III or IV vent, or a straight (without bends) Type B vent
- Condensate drain that is no more than 2 inches higher than the base of the water heater
- Gas supply line with a minimum 200,000 Btu/hr dedicated capacity for the water heater

7. Domestic hot water lines shall be insulated. Insulation shall be the thickness of the pipe diameter up to 2" in size and minimum 2" thickness for pipes larger than 2" in diameter. (CPC 609.11)

8. A 3-inch gravity drain shall be provided at the low point of underfloor spaces, installed so as to provide 1/4-inch per foot grade and terminate at an exterior point of the building protected from blockage. The opening shall be screened with a corrosion-resistant wire mesh with mesh openings of 1/4-inch in dimension. Lengths of the gravity drains over 10 feet in length shall be first approved by the Building Official. (L-V 8.9)

9. Water heaters located in attics, ceiling assemblies and raised floor assemblies shall show a water-tight corrosion resistant minimum 1 ½" deep pan under the water heater with a minimum ¾ inch drain to the exterior of the building. (CPC 507.5)

10. Water closet shall be located in a space not less than 30" in width (15" on each side) and 24" minimum clearance in front. (CPC 402.5)

11. The maximum hot water temperature discharging from a bathtub or whirlpool bathtub filler shall not exceed 120 degrees F. (CPC 418)

12. Provide anti-siphon valves on all hose bibs. (CPC 603.5.7)

13. Floor drains shall be provided with a trap primer. (CPC 1007)

14. Maximum water flow rates. (CGBSC 4.303.1):

- Water Closets: 1.28gpf
- Urinals: .125gpf
- Kitchen Faucets: 1.8gpm @ 60psi
- Lavatory Faucets: 1.2pgm @ 60psi
- Showerheads: 1.8gpm

MECHANICAL

1. Wood burning appliances shall be one of the following:

- A pellet-fueled wood burning heater.
- A U.S. EPA Phase II Certified wood burning heater.
- An appliance or fireplace determined to meet the U.S. EPA particulate matter emission standard of less than 7.5 grams per hour for a non-catalytic wood fired appliance or 4.1 grams per hour for a catalytic wood fired appliance and is approved in writing by the APCO.

2. All newly installed gas fireplaces shall be direct vent and sealed-combustion type. (CMC 912.2)

3. Any installed wood stove or pellet stove shall have a permanent NSPS label certifying emission limits.

4. Top chimney must extend a minimum of 2 ft. above any part of the building within 10 ft. (CMC 802.5.4)

5. Fireplaces shall have closable metal or glass doors, have combustion air intake drawn from the outside and have a readily accessible flue dampener control. Continuous burning pilot lights are prohibited. (CEC 150.0(e))

6. Provide combustion air for all gas fired appliances per CMC Chapter 7.

7. Gas vents passing through an insulated assembly shall have a metal insulation shield a minimum 2" above insulation. (509.6.2.7)

8. Gas water heater and furnace are not allowed in areas opening into bathrooms, closets or bedrooms unless installed in a closet equipped with a listed gasketed door assembly and a listed self-closing device with all combustion air obtained from the outdoors. (CPC 504)

9. Roof top equipment on roofs with over 4/12 slope shall have a level 30"x30" working platform. (CMC 304.2)

10. Exhaust openings terminating to the outdoors shall be covered with a corrosion resistant screen ¼"-1/2" in opening size (not required for clothes dryers). (CMC 502.1)

11. Vent dryer to outside of building (not to under-floor area). Vent length shall be 14 ft. maximum. Shall terminate a minimum of 3' from the property line and any opening into the building. (CMC 504.4.2)

12. Environmental Air Ducts shall not terminate less than 3' to a property line, 10' to a forced air inlet, 3' to openings into the building and shall not discharge on to a public way. (CMC 502.2.1)

13. Provide minimum 100 square inches make-up air for clothes dryers installed in closets. (CMC 504.4.1(1))

14. Heating system is required to maintain 68 degrees at 3 ft. above floor level and 2ft from exterior walls in all habitable rooms. (CRC R303.9).

ENERGY CODE

1. All ducts in conditioned spaces must include R-4.2 insulation. (California Energy Code 150.1(c)9)

2. Insulate the first 5' of hot/cold water lines, all lines ¾ inch in diameter or larger, all recirculation piping, piping to storage tanks and all hot water pipes to kitchen fixtures from the water heater. (California Energy Code 150(j)(2))

3. Isolation water valves required for instantaneous water heaters 6.8kBTU/hr and above. Valves shall be installed on both cold and hot water lines. Each valve will need a hose bib or other fitting allowing for flushing the water heater when the valves are closed. (CEC 110.3(c)7)

4. ALL luminaires must be high efficacy (California Energy Code 150.0(k)1A)

5. The maximum number of blank electrical boxes installed more than 5 feet above the floor is limited to the number of bedrooms. The blank boxes shall be served by a dimmer, vacancy sensor or fan speed control. (California Energy Code 150.0(k)1B)

6. Luminaries recessed in insulated ceilings must meet these requirements (California Energy Code 150.0(k)1C):

- They must be rated for direct insulation contact (IC).
- They must be certified as airtight (AT) construction.
- They must have a sealed gasket or caulking between the housing and ceiling to prevent flow of heated or cooled air out of living areas and into the ceiling cavity.
- They may not contain a screw base sockets
- They shall contain a JA8 compliant light source

7. In bathrooms, garages, laundry rooms, and utility rooms, at least one luminaire in each of these spaces shall be controlled by a vacancy sensor. (California Energy Code 150.0(k)2J)

8. Joint Appendix A (JA8) certified lamps shall be considered high efficacy. JA8 compliant light sources shall be controlled by a vacancy sensor or dimmer. (Exception: <70sf closets and hallway) (California Energy Code 150.0(k)2K)

9. Under-cabinet lighting shall be switched separately from other lighting systems. (California Energy Code 150.0(k)2L)

10. All exterior lighting shall be high efficacy, be controlled by a manual on/off switch and have one of the following controls (the manual switch shall not override the automatic control device): (California Energy Code 150.0(k)3A)

- Photo-control and motion sensor
- Photo-control and automatic time switch control
- Astronomical time clock control turning lights off during the day

11. All high efficacy light fixtures shall be certified as "high-efficacy" light fixtures by the California Energy Commission.

12. Contractor shall provide the homeowner with a luminaire schedule giving the lamps used in the luminaires installed. (California Energy Code 10-103(b))

13. Project shall meet the minimum ventilation and acceptable indoor air quality requirements per ASHRAE Standard 62.2. Window operation is not a permissible method of providing the whole building ventilation airflow required. This is subject to HERS testing. The following label must be attached to the fan switch: "To maintain minimum levels of outside air ventilation required for good health, the fan control should be on at all times when the building is occupied, unless there is severe outdoor air contamination." (California Energy Code 150.0(o))

GREEN BUILDING

1. Projects which disturb less than one acre of soil and are not part of a larger common plan of development which in total disturbs one acre or more, shall manage storm water drainage during construction, one or more of the following measures shall be implemented to prevent flooding of adjacent property, prevent erosion and retain soil runoff on the site (CGBSC 4.106.2):

- Retention basins of sufficient size shall be utilized to retain storm water on site
- Where storm water is conveyed to a public drainage system, collection point, gutter, or similar disposal method, water shall be filtered by use of a barrier system, wattle or other method approved by the enforcing agency.

2. All new residential construction with attached private garages shall have the following for electric vehicle (EV) charging stations (CGBSC 4.106.4):

- Install a minimum 1-inch conduit capable of supplying a 208/240V branch circuit to a suitable box location for EV charging. The other end shall terminate to the main service and/or subpanel.
- The main panel and/or subpanel shall be of sufficient size to install a 40-ampere dedicated branch circuit. The dedicated overcurrent protection space shall be labeled "EV CAPABLE".

3. Multiple shower heads serving a single shower shall have a combined flow rate of 2gpm or the shower shall be designed to allow only one shower outlet to be in operation at a time. (CGBSC 4.303.1.3.2)

4. Residential projects with an aggregate landscape area equal to or greater than 500 square feet shall comply with either a local water efficient landscape ordinance or the current California Department of Water Resources' Model Water Efficient Landscape Ordinance (MWELO), whichever is more stringent. Automatic irrigation system controllers installed at time of final inspection shall have weather or soil based controllers and/or weather based controllers with rain sensors. Soil moisture based controllers are not required to have rain sensor input. (CGBSC 4.304)

5. Recycle and/or reuse a minimum of 65 percent of nonhazardous construction and demolition waste. (CGBSC 4.408.2)

6. At time of final inspection, a building operation and maintenance manual, compact disc, etc shall be provided containing the following: (CGBSC 4.410)

- Directions that manual shall remain onsite for the life of the building
- Operation and maintenance instructions for equipment, appliances, roof/yard drainage, irrigation systems, etc
- Information from local utility, water and waste recovery providers
- Public transportation and carpool options
- Material regarding importance of keeping humidity levels between 30-60 percent
- Information regarding routine maintenance procedures
- State solar energy incentive program information
- A copy of any required special inspection verifications that were required (if any)

7. The project shall meet minimum pollutant control requirements for adhesives, sealants, caulks, paints, carpet, resilient flooring systems, etc. (CGBSC 4.504)

8. Duct openings related to HVAC systems shall be covered with tape, plastic, sheet metal or other methods to reduce the amount of water, dust and debris which may enter the system. (CGBSC 4.504.1)

WRITTEN DIMENSIONS SHALL HAVE PRECEDENCE OVER SCALE DIMENSIONS. contractors and home owner builders shall verify and be responsible for dimensions and conditions of the project. DR Designs must be notified of any variation from the dimensions, conditions and specifications appearing on this plan.

DR
D E S I G N S
(5 3 0) 5 5 9 - 2 5 3 9

NEW CONSTRUCTION

632 ZION STREET
NEVADA CITY, CA

CONSTRUCTION
D O C U M E N T

DUSTIN RUCKMAN

REVISIONS

1	
2	

APN# 005-230-010-000

19-0076 | 12/27/2019

A1.2

CAL GREEN

RESIDENTIAL MANDATORY MEASURES EFFECTIVE JANUARY 1, 2017
2016 CALGREEN CODE

CHAPTER 1 - ADMINISTRATION
101.3.1 SCOPE

APPLIES TO ALL NEWLY CONSTRUCTED RESIDENTIAL BUILDINGS:
LOW-RISE, HIGH-RISE, AND
HOTELS/MOTELS.

CHAPTER 3 - GREEN BUILDING
301.1.1 ADDITIONS AND ALTERATIONS

- APPLIES TO ADDITIONS OR ALTERATIONS OF RESIDENTIAL BUILDINGS WHERE THE ADDITION OR ALTERATION INCREASES THE BUILDING'S CONDITIONED AREA, VOLUME, OR SIZE.
- REQUIREMENTS ONLY APPLY WITHIN THE SPECIFIC AREA OF THE ADDITION OR ALTERATION.
- NOTE DIRECTS CODE USERS TO CIVIL CODE SECTION 1101.1 ET SEQ., REGARDING REPLACEMENT OF NON-COMPLIANT PLUMBING FIXTURES.

301.2 LOW-RISE AND HIGH-RISE BUILDINGS

- BANNERS IDENTIFY PROVISIONS APPLYING TO LOW-RISE ONLY [LR] OR HIGH-RISE ONLY [HR].

DIVISION 4.1 - PLANNING AND DESIGN (SITE DEVELOPMENT)
4.106.2 STORM WATER DRAINAGE AND RETENTION DURING CONSTRUCTION

- PROJECTS WHICH DISTURB LESS THAN 1 ACRE OF SOIL AND ARE NOT PART OF A LARGER COMMON PLAN OF DEVELOPMENT SHALL MANAGE STORM WATER DRAINAGE DURING CONSTRUCTION.

4.106.3 GRADING AND PAVING

- CONSTRUCTION PLANS SHALL INDICATE HOW THE SITE GRADING OR DRAINAGE SYSTEM WILL MANAGE ALL SURFACE WATER FLOWS TO KEEP WATER FROM ENTERING BUILDINGS. EXCEPTION FOR ADDITIONS AND ALTERATIONS WHICH DO NOT ALTER THE EXISTING DRAINAGE PATH.

4.106.4 ELECTRIC VEHICLE (EV) CHARGING FOR NEW CONSTRUCTION

- COMPLY WITH SECTION 4.106.4.1 AND 4.106.4.2 FOR FUTURE INSTALLATION AND USE OF EV CHARGERS.
- ELECTRIC VEHICLE SUPPLY EQUIPMENT (EVSE) SHALL BE INSTALLED IN ACCORDANCE WITH THE CALIFORNIA ELECTRICAL CODE, ARTICLE 625.
- EXCEPTIONS ON A CASE-BY-CASE BASIS AS DETERMINED BY THE LOCAL ENFORCING AGENCY:
  1. WHERE THERE IS NO COMMERCIAL POWER SUPPLY.
  2. VERIFICATION THAT MEETING REQUIREMENTS WILL ALTER THE LOCAL UTILITY INFRASTRUCTURE DESIGN REQUIREMENTS ON THE UTILITY SIDE OF THE METER INCREASING COSTS TO THE HOMEOWNER/DEVELOPER BY MORE THAN $400.00 PER DWELLING UNIT.

4.106.4.1 & 4.106.4.1.1 EV CHARGING: 1- & 2-FAMILY DWELLINGS/TOWNHOUSES WITH ATTACHED PRIVATE GARAGES

- INSTALL A LISTED RACEWAY TO ACCOMMODATE A DEDICATED 208/240-VOLT BRANCH CIRCUIT FOR EACH DWELLING UNIT.
- RACEWAY SHALL NOT BE LESS THAN TRADE SIZE 1 (NOMINAL 1-INCH INSIDE DIAMETER).
- RACEWAY SHALL ORIGINATE AT THE MAIN SERVICE OR SUBPANEL AND TERMINATE INTO A LISTED CABINET, BOX OR OTHER ENCLOSURE IN CLOSE PROXIMITY TO THE PROPOSED LOCATION OF AN EV CHARGER.
- RACEWAYS ARE REQUIRED TO BE CONTINUOUS AT ENCLOSED, INACCESSIBLE OR CONCEALED AREAS AND SPACES.
- SERVICE PANEL AND/OR SUBPANEL SHALL PROVIDE CAPACITY TO INSTALL A 40-AMPERE MINIMUM DEDICATED BRANCH CIRCUIT AND SPACE(S) RESERVED TO PERMIT INSTALLATION OF A BRANCH CIRCUIT OVERCURRENT PROTECTIVE DEVICE. SERVICE PANEL OR SUBPANEL CIRCUIT DIRECTORY SHALL IDENTIFY THE OVERCURRENT PROTECTIVE DEVICE SPACE(S) RESERVED FOR FUTURE EV CHARGING AS "EV CAPABLE". THE RACEWAY TERMINATION LOCATION SHALL BE PERMANENTLY AND VISIBLY MARKED AS "EV CAPABLE".

4.106.4.2 EV CHARGING FOR MULTIFAMILY DWELLINGS

- APPLIES TO BUILDING SITES WITH 17 OR MORE MULTIFAMILY DWELLING UNITS CONSTRUCTED ON THE SITE.
- 3% OF THE TOTAL NUMBER OF PARKING SPACES PROVIDED FOR ALL TYPES OF PARKING FACILITIES, BUT IN NO CASE LESS THAN ONE, SHALL BE ELECTRIC VEHICLE CHARGING SPACES (EV SPACES) CAPABLE OF SUPPORTING FUTURE EVSE. CALCULATIONS FOR THE NUMBER OF EV SPACES SHALL BE ROUNDED UP TO THE NEAREST WHOLE NUMBER.

NOTE: CONSTRUCTION DOCUMENTS ARE INTENDED TO DEMONSTRATE THE PROJECT'S CAPABILITY AND CAPACITY FOR FACILITATING FUTURE EV CHARGING. THERE IS NO REQUIREMENT FOR EV SPACES TO BE CONSTRUCTED OR AVAILABLE UNTIL EV CHARGERS ARE INSTALLED FOR USE.

4.106.4.2.1 EV CHARGING SPACE (EV SPACE) LOCATIONS

- CONSTRUCTION DOCUMENTS SHALL INDICATE THE LOCATION OF PROPOSED EV SPACES. AT LEAST 1 EV SPACE SHALL BE LOCATED IN COMMON USE AREAS AND AVAILABLE FOR USE BY ALL RESIDENTS.
- WHEN EV CHARGERS ARE INSTALLED, EV SPACES REQUIRED BY SECTION 4.106.4.2.2, ITEM 3, SHALL COMPLY WITH AT LEAST 1 OF THE FOLLOWING OPTIONS:
  1. THE EV SPACE SHALL BE LOCATED ADJACENT TO AN ACCESSIBLE PARKING SPACE MEETINGTHE REQUIREMENTS OF THE CALIFORNIA BUILDING CODE, CHAPTER 11A, TO ALLOW USE OF THE EV CHARGER FROM THE ACCESSIBLE PARKING SPACE.
  2. THE EV SPACE SHALL BE LOCATED ON AN ACCESSIBLE ROUTE TO THE BUILDING, AS DEFINED IN THE CALIFORNIA BUILDING CODE, CHAPTER 2.

4.106.4.2.2 EV CHARGING SPACE (EV SPACE) DIMENSIONS

EV SPACES SHALL BE DESIGNED TO COMPLY WITH THE FOLLOWING:

1. THE MINIMUM LENGTH OF EACH EV SPACE SHALL BE 18 FEET.
2. THE MINIMUM WIDTH OF EACH EV SPACE SHALL BE 9 FEET.
3. ONE IN EVERY 25 EV SPACES, BUT NOT LESS THAN 1, SHALL ALSO HAVE AN 8-FOOT WIDE MINIMUM AISLE. A 5-FOOT WIDE MINIMUM AISLE SHALL BE PERMITTED PROVIDED THE MINIMUM WIDTH OF THE EV SPACE IS 12 FEET.
   A. SURFACE SLOPE FOR TIS EV SPACE AND AISLE SHALL NOT EXCEED 1 UNIT VERTICAL IN 48 UNITS HORIZONTAL (2.083% SLOPE) IN ANY DIRECTION.

4.106.4.2.3 SINGLE EV SPACE REQUIRED

- INSTALL LISTED RACEWAY CAPABLE OF ACCOMMODATING A 208/240-VOLT DEDICATED BRANCH CIRCUIT.
  1. THE RACEWAY SHALL NOT BE LESS THAN TRADE SIZE 1 (NOMINAL 1-INCH INSIDE DIAMETER).
  2. THE RACEWAY SHALL ORIGINATE AT THE MAIN SERVICE OR SUBPANEL AND SHALL TERMINATE INTO A LISTED CABINET, BOX OR ENCLOSURE IN CLOSE PROXIMITY TO THE PROPOSED LOCATION OF THE EV SPACE.
  3. CONSTRUCTION DOCUMENTS SHALL IDENTIFY THE RACEWAY TERMINATION POINT.

CAL GREEN CONT.

  4. THE SERVICE PANEL AND/OR SUBPANEL SHALL PROVIDE CAPACITY TO INSTALL A 40-AMPERE MINIMUM DEDICATED BRANCH CIRCUIT AND SPACE(S) RESERVED TO PERMIT INSTALLATION OF A BRANCH CIRCUIT OVERCURRENT PROTECTIVE DEVICE.

4.106.4.2.4 MULTIPLE EV SPACES REQUIRED

- CONSTRUCTION DOCUMENTS SHALL INDICATE RACEWAY TERMINATION POINT AND PROPOSED LOCATION OF FUTURE EV SPACES AND EV CHARGERS. CONSTRUCTION DOCUMENTS SHALL ALSO PROVIDE INFORMATION ON AMPERAGE OF FUTURE EVSE, RACEWAY METHOD(S), WIRING SCHEMATICS AND ELECTRICAL LOAD CALCULATIONS TO VERIFY ELECTRICAL PANEL SERVICE CAPACITY AND ELECTRICAL SYSTEM, INCLUDING ANY ON-SITE DISTRIBUTION TRANSFORMER(S), HAVE SUFFICIENT CAPACITY TO SIMULTANEOUSLY CHARGE ALL EVS AT ALL REQUIRED EV SPACES AT FULL RATED AMPERAGE OF THE EVSE.
- PLAN DESIGN SHALL BE BASED UPON A 40-AMPERE MINIMUM BRANCH CIRCUIT.
- RACEWAYS AND RELATED COMPONENTS PLANNED TO BE INSTALLED UNDERGROUND, ENCLOSED, INACCESSIBLE OR IN CONCEALED AREAS AND SPACES SHALL BE INSTALLED AT THE TIME OF ORIGINAL CONSTRUCTION.

4.106.4.2.5 IDENTIFICATION

- THE SERVICE PANEL OR SUBPANEL CIRCUIT DIRECTORY SHALL IDENTIFY THE OVERCURRENT PROTECTIVE DEVICE SPACE(S) RESERVED FOR FUTURE EV CHARGING PURPOSES AS "EV CAPABLE" IN ACCORDANCE WITH THE CALIFORNIA ELECTRICAL CODE.

NOTES:

A. THE CALIFORNIA DEPARTMENT OF TRANSPORTATION ADOPTS AND PUBLISHES THE "CALIFORNIA MANUAL ON UNIFORM TRAFFIC CONTROL DEVICES (CALIFORNIA MUTCD)" TO PROVIDE UNIFORM STANDARDS AND SPECIFICATIONS FOR ALL OFFICIAL TRAFFIC CONTROL DEVICES IN CALIFORNIA. ZERO EMISSION VEHICLE SIGNS AND PAVEMENT MARKINGS CAN BE FOUND IN THE NEW POLICIES & DIRECTIVES NUMBER 12-01.
WEBSITE: HTTP://WWW.DOT.CA.GOV/HQ/TRAFFOPS/POLICY/13-01.PDF
B. SEE VEHICLE CODE SECTION 22511 FOR EV CHARGING SPACE SIGNAGE IN OFF-PARKING FACILITIES AND FOR USE OF EV CHARGING SPACES.
C. THE GOVERNOR'S OFFICE OF PLANNING AND RESEARCH (OPR) PUBLISHED A "ZEROEMISSION VEHICLE COMMUNITY READINESS GUIDEBOOK" WHICH PROVIDES HELPFUL INFORMATION FOR LOCAL GOVERNMENTS, RESIDENTS AND BUSINESSES.
WEBSITE: HTTP://OPR.CA.GOV/DOCS/ZEV_GUIDEBOOK.PDF

DIVISION 4.2- ENERGY EFFICIENCY
4.201.1 & 5.201.1 SCOPE

- ENERGY EFFICIENCY REQUIREMENTS FOR LOW-RISE RESIDENTIAL (SECTION 4.201.1) AND HIGHRISE RESIDENTIAL/HOTELS/MOTELS (SECTION 5.201.1) ARE NOW IN BOTH RESIDENTIAL AND NONRESIDENTIAL CHAPTERS OF CALGREEN.
- STANDARDS FOR RESIDENTIAL BUILDINGS DO NOT REQUIRE COMPLIANCE WITH LEVELS OF MINIMUM ENERGY EFFICIENCY BEYOND THOSE REQUIRED BY THE 2016 CALIFORNIA ENERGY CODE.

DIVISION 4.3 – WATER EFFICIENCY AND CONSERVATION (INDOOR WATER USE)
4.303.1 WATER CONSERVING PLUMBING FIXTURES AND FITTINGS

PLUMBING FIXTURES AND FITTINGS SHALL COMPLY WITH THE FOLLOWING:

- 4.303.1.1 WATER CLOSETS: ≤ 1.28 GAL/FLUSH
- 4.303.1.2 WALL MOUNTED URINALS: ≤ 0.125 GAL/FLUSH; ALL OTHER URINALS ≤ 0.5 GAL/FLUSH
- 4.303.1.3.1 SINGLE SHOWERHEADS: ≤ 2.0 GPM @ 80 PSI
- 4.303.1.3.2 MULTIPLE SHOWERHEADS: COMBINED FLOW RATE OF ALL SHOWERHEADS CONTROLLED BY A SINGLE VALVE SHALL NOT EXCEED 2.0 GPM @ 80 PSI, OR ONLY ONE SHOWER OUTLET IS TO BE IN OPERATION AT A TIME
- 4.303.1.4.1 RESIDENTIAL LAVATORY FAUCETS: MAXIMUM FLOW RATE ≤ 1.2 GPM @ 60 PSI; MINIMUM FLOW RATE ≥ 0.8 GPM @ 20 PSI
- 4.303.1.4.2 LAVATORY FAUCETS IN COMMON AND PUBLIC USE AREAS OF RESIDENTIAL BUILDINGS: ≤ 0.5 GPM @ 60 PSI
- 4.303.1.4.3 METERING FAUCETS: ≤ 0.25 GALLONS PER CYCLE
- 4.303.1.4.4 KITCHEN FAUCETS: ≤ 1.8 GPM @ 60 PSI; TEMPORARY INCREASE TO 2.2 GPM ALLOWED BUT SHALL DEFAULT TO 1.8 GPM

4.303.2 STANDARDS FOR PLUMBING FIXTURES AND FITTINGS

- PLUMBING FIXTURES AND FITTINGS SHALL BE INSTALLED IN ACCORDANCE WITH THE CALIFORNIA PLUMBING CODE, AND SHALL MEET APPLICABLE STANDARDS REFERENCED IN TABLE 1701.1 OF THE CALIFORNIA PLUMBING CODE.

DIVISION 4.3 – WATER EFFICIENCY AND CONSERVATION (OUTDOOR WATER USE)
4.304.1 OUTDOOR POTABLE WATER USE IN LANDSCAPE AREAS

- AFTER DECEMBER 1, 2015, NEW RESIDENTIAL DEVELOPMENTS WITH AN AGGREGATE LANDSCAPE AREA EQUAL TO OR GREATER THAN 500 SQUARE FEET SHALL COMPLY WITH ONE OF THE FOLLOWING:
  1. A LOCAL WATER EFFICIENT LANDSCAPE ORDINANCE OR THE CURRENT CALIFORNIA DEPARTMENT OF WATER RESOURCES' MODEL WATER EFFICIENT LANDSCAPE ORDINANCE (MWELO), WHICHEVER IS MORE STRINGENT, OR
  2. PROJECTS WITH AGGREGATE LANDSCAPE AREAS LESS THAN 2500 SQUARE FEET MAY COMPLYWITH THE MWELO'S APPENDIX D PRESCRIPTIVE COMPLIANCE OPTION.

DIVISION 4.4 – MATERIAL CONSERVATION & RESOURCE EFFICIENCY (ENHANCED DURABILITY & REDUCED MAINTENANCE)
4.406.1 RODENT PROOFING

- ANNULAR SPACES AROUND PIPES, ELECTRIC CABLES, CONDUITS OR OTHER OPENINGS IN SOLE/BOTTOM PLATES AT EXTERIOR WALLS SHALL BE CLOSED WITH CEMENT MORTAR, CONCRETE MASONRY OR A SIMILAR METHOD ACCEPTABLE TO THE ENFORCING AGENCY TO PREVENT PASSAGE OF RODENTS.

DIVISION 4.4 – MATERIAL CONSERVATION & RESOURCE EFFICIENCY (CONSTRUCTION WASTE REDUCTION, DISPOSAL & RECYCLING)
4.408.1 CONSTRUCTION WASTE REDUCTION OF AT LEAST 65%

- RECYCLE AND/OR SALVAGE FOR REUSE A MINIMUM OF 65% OF THE NONHAZARDOUS CONSTRUCTION AND DEMOLITION WASTE IN ACCORDANCE WITH EITHER SECTION 4.408.2, 4.408.3 OR 4.408.4; OR MEET A MORE STRINGENT LOCAL CONSTRUCTION AND DEMOLITION WASTE MANAGEMENT ORDINANCE.
- DOCUMENTATION IS REQUIRED PER SECTION 4.408.5. EXCEPTIONS:
  1. EXCAVATED SOIL AND LAND-CLEARING DEBRIS.
  2. ALTERNATIVE WASTE REDUCTION METHODS DEVELOPED BY WORKING WITH LOCAL ENFORCING AGENCIES IF DIVERSION OR RECYCLE FACILITIES CAPABLE OF COMPLIANCE WITH THIS ITEM DO NOT EXIST OR ARE NOT LOCATED REASONABLY CLOSE TO THE JOBSITE.
  3. THE ENFORCING AGENCY MAY MAKE EXCEPTIONS TO THE REQUIREMENTS OF THIS SECTION WHEN ISOLATED JOBSITES ARE LOCATED IN AREAS BEYOND THE HAUL BOUNDARIES OF THE DIVERSION FACILITY.

CAL GREEN CONT.

4.408.2 CONSTRUCTION WASTE MANAGEMENT PLAN

- SUBMIT A CONSTRUCTION WASTE MANAGEMENT PLAN MEETING ITEMS 1 THROUGH 5 IN SECTION 4.408.2. PLANS SHALL BE UPDATED AS NECESSARY AND SHALL BE AVAILABLE FOR EXAMINATION DURING CONSTRUCTION.

4.408.3 WASTE MANAGEMENT COMPANY

- UTILIZE A WASTE MANAGEMENT COMPANY, APPROVED BY THE ENFORCING AGENCY, WHICH CAN PROVIDE VERIFIABLE DOCUMENTATION THAT DIVERTED CONSTRUCTION AND DEMOLITION WASTE MATERIALS MEET THE REQUIREMENTS IN SECTION 4.408.1.

4.408.4 & 4.408.4.1 WASTE STREAM REDUCTION ALTERNATIVE

- (LR) PROJECTS THAT GENERATE A TOTAL COMBINED WEIGHT OF CONSTRUCTION AND DEMOLITION WASTE DISPOSED IN LANDFILLS, WHICH DO NOT EXCEED 3.4 POUNDS PER SQUARE FOOT OF THE BUILDING AREA SHALL MEET THE MINIMUM 65% CONSTRUCTION WASTE REDUCTION REQUIREMENT IN SECTION 4.408.1.
- PROJECTS THAT GENERATE A TOTAL COMBINED WEIGHT OF CONSTRUCTION AND DEMOLITION WASTE DISPOSED IN LANDFILLS, WHICH DO NOT EXCEED 2 POUNDS PER SQUARE FOOT OF THE BUILDING AREA, SHALL MEET THE MINIMUM 65% CONSTRUCTION WASTE REDUCTION REQUIREMENT IN SECTION 4.408.1.

DIVISION 4.4 – MATERIAL CONSERVATION & RESOURCE EFFICIENCY (BUILDING MAINTENANCE & OPERATION)
4.410.1 OPERATION AND MAINTENANCE MANUAL

- AT THE TIME OF FINAL INSPECTION, A MANUAL, COMPACT DISC, WEB-BASED REFERENCE OR OTHER MEDIA ACCEPTABLE TO THE ENFORCING AGENCY WHICH COVERS 10 SPECIFIC SUBJECT AREAS SHALL BE PLACED IN THE BUILDING.

4.410.2 RECYCLING BY OCCUPANTS

- WHERE 5 OR MORE MULTIFAMILY DWELLING UNITS ARE CONSTRUCTED ON A BUILDING SITE, PROVIDE READILY ACCESSIBLE AREA(S) THAT SERVES ALL BUILDINGS ON THE SITE AND IS IDENTIFIED FOR THE DEPOSITING, STORAGE AND COLLECTION OF NON-HAZARDOUS MATERIALS FOR RECYCLING, INCLUDING (AT MINIMUM) PAPER, CORRUGATED CARDBOARD, GLASS, PLASTICS, ORGANIC WASTE, AND METALS OR MEET A LAWFULLY ENACTED LOCAL RECYCLING ORDINANCE, IF MORE RESTRICTIVE.
  1. EXCEPTION: RURAL JURISDICTIONS THAT MEET AND APPLY FOR THE EXEMPTION IN PUBLIC RESOURCES CODE SECTION 42649.82 (A)(2)(A) ET. SEQ. ARE NOT REQUIRED TO COMPLY WITH THE ORGANIC WASTE PORTION OF THIS SECTION.

DIVISION 4.5 – ENVIRONMENTAL QUALITY (FIREPLACES)
4.503.1 GENERAL

- ANY INSTALLED GAS FIREPLACE SHALL BE A DIRECT-VENT SEALED-COMBUSTION TYPE. ANY INSTALLED WOODSTOVE OR PELLET STOVE SHALL COMPLY WITH U.S. EPA NEW SOURCE PERFORMANCE STANDARDS (NSPS) EMISSION LIMITS AS APPLICABLE, AND SHALL HAVE A PERMANENT LABEL INDICATING THEY ARE CERTIFIED TO MEET THE EMISSION LIMITS. WOODSTOVES, PELLET STOVES AND FIREPLACES SHALL ALSO COMPLY WITH ALL APPLICABLE LOCAL ORDINANCES.

DIVISION 4.5 – ENVIRONMENTAL QUALITY (POLLUTANT CONTROL)
4.504.1 PROTECTION DURING CONSTRUCTION

- AT THE TIME OF ROUGH INSTALLATION, DURING STORAGE ON THE CONSTRUCTION SITE AND UNTIL FINAL STARTUP OF THE HEATING, COOLING AND VENTILATING EQUIPMENT, ALL DUCT AND OTHER RELATED AIR INTAKE AND DISTRIBUTION COMPONENT OPENINGS SHALL BE COVERED. TAPE, PLASTIC, SHEETMETAL OR OTHER METHODS ACCEPTABLE TO THE ENFORCING AGENCY TO REDUCE THE AMOUNT OF WATER, DUST AND DEBRIS ENTERING THE SYSTEM MAY BE USED.

4.504.2.1 ADHESIVES, SEALANTS AND CAULKS

- ADHESIVES, SEALANTS AND CAULKS USED ON THE PROJECT SHALL MEET THE REQUIREMENTS OF THE FOLLOWING STANDARDS UNLESS MORE STRINGENT LOCAL OR REGIONAL AIR POLLUTION OR AIR QUALITY MANAGEMENT DISTRICT RULES APPLY:
  1. ADHESIVES, ADHESIVE BONDING PRIMERS, ADHESIVE PRIMERS, SEALANTS, SEALANT PRIMERS, AND CAULKS SHALL COMPLY WITH LOCAL OR REGIONAL AIR POLLUTION CONTROL OR AIR QUALITY MANAGEMENT DISTRICT RULES WHERE APPLICABLE, OR SCAQMD RULE 1168 VOC LIMITS, AS SHOWN IN TABLES 4.504.1 OR 4.504.2, AS APPLICABLE. SUCH PRODUCTS SHALL ALSO COMPLY WITH RULE 1168 PROHIBITION ON THE USE OF CERTAIN TOXIC COMPOUNDS (CHLOROFORM, ETHYLENE DICHLORIDE, METHYLENE CHLORIDE, PERCHLOROETHYLENE AND TRICHLOROENTYLENE), EXCEPT FOR AEROSOL PRODUCTS AS SPECIFIED IN SUBSECTION 2 BELOW.
  2. AEROSOL ADHESIVES, AND SMALLER UNIT SIZES OF ADHESIVES, AND SEALANT OR CAULKING COMPOUNDS (IN UNITS OF PRODUCT, LESS PACKAGING, WHICH DO NOT WEIGH MORE THAN 1 POUND AND DO NOT CONSIST OF MORE THAN 16 FLUID OUNCES) SHALL COMPLY WITH STATEWIDE VOC STANDARDS AND OTHER REQUIREMENTS, INCLUDING PROHIBITIONS ON USE OF CERTAIN TOXIC COMPOUNDS, OF THE CALIFORNIA CODE OF REGULATIONS (CCR), TITLE 17, COMMENCING WITH SECTION 94507.

4.504.2.2 PAINTS AND COATINGS

- ARCHITECTURAL PAINTS AND COATINGS SHALL COMPLY WITH VOC LIMITS IN TABLE 1 OF THE AIR RESOURCES BOARD ARCHITECTURAL SUGGESTED CONTROL MEASURE, AS SHOWN IN TABLE 4.504.3, UNLESS MORE STRINGENT LOCAL LIMITS APPLY.
- THE VOC CONTENT LIMIT FOR COATINGS THAT DO NOT MEET THE DEFINITIONS FOR THE SPECIALTY COATINGS CATERGORIES LISTED IN TABLE 4.504.3 SHALL BE DETERMINED BY CLASSIFYING THE COATING AS FLAT, NONFLAT, OR NONFLAT-HIGH GLOSS COATING, BASED ON ITS GLOSS, AS DEFINED IN SUBSECTIONS 4.21, 4.36, AND 4.37, OF THE 2007 CALIFORNIA AIR RESOURCES BOARD, SUGGESTED CONTROL MEASURE, AND THE CORRESPONDING FLAT, NONFLAT, OR NONFLAT-HIGH GLOSS VOC LIMIT IN TABLE 4.504.3 SHALL APPLY.

4.504.2.3 AEROSOL PAINTS AND COATINGS

- AEROSOL PAINTS AND COATINGS SHALL MEET THE PRODUCT-WEIGHTED MIR LIMITS FOR ROC IN SECTION 94522(A)(2) AND OTHER REQUIREMENTS, INCLUDING PROHIBITIONS ON USE OF CERTAIN TOXIC COMPOUNDS AND OZONE DEPLETING SUBSTANCES, IN SECTION 94522(E)(1) AND (F)(1) OF THE CCR, TITLE 17, COMMENCING WITH SECTION 94520; AND IN AREAS UNDER THE JURISDICTION OF THE BAY AREA AIR QUALITY MANAGEMENT DISTRICT SHALL ADDITIONALLY COMPLY WITH THE PERCENT VOC BY WEIGHT OF PRODUCT LIMITS OF REGULATION 8, RULE 49.

4.504.3 CARPET SYSTEMS

- CARPET INSTALLED IN THE BUILDING INTERIOR SHALL MEET THE TESTING AND PRODUCT REQUIREMENTS OF 1 OF THE FOLLOWING:

CAL GREEN CONT.

  1. CARPET AND RUG INSTITUTE'S GREEN LABEL PLUS PROGRAM.
  2. CALIFORNIA DEPARTMENT OF PUBLIC HEALTH, "STANDARD METHOD FOR THE TESTING AND EVALUATION OF VOLATILE ORGANIC CHEMICAL EMISSIONS FROM INDOOR SOURCES USING ENVIRONMENTAL CHAMBERS," VERSION 1.1, FEBRUARY 2010 (ALSO KNOWN AS SPECIFICATION 01350)
  3. NSF/ANSI 140 AT THE GOLD LEVEL
  4. SCIENTIFIC CERTIFICATIONS SYSTEMS INDOOR ADVANTAGE™ GOLD

4.504.3.1 CARPET CUSHION

- CARPET CUSHION INSTALLED IN THE BUILDING INTERIOR SHALL MEET THE REQUIREMENTS OF THE CARPET AND RUG INSTITUTE'S GREEN LABEL PLUS PROGRAM.

4.504.3.2 CARPET ADHESIVE

- CARPET ADHESIVES SHALL MEET THE REQUIREMENTS OF TABLE 4.504.1.

4.504.4 RESILIENT FLOORING SYSTEMS

- WHERE RESILIENT FLOORING IS INSTALLED, AT LEAST 80% OF FLOOR AREA RECEIVING RESILIENT FLOORING SHALL COMPLY WITH ONE OR MORE OF THE FOLLOWING:
  1. PRODUCTS COMPLIANT WITH THE CALIFORNIA DEPARTMENT OF PUBLIC HEALTH, "STANDARD METHOD FOR THE TESTING AND EVALUATION OF VOLATILE ORGANIC CHEMICAL EMISSIONS FROM INDOOR SOURCES USING ENVIRONMENTAL CHAMBERS," VERSION 1.1, FEBRUARY 2010 (ALSO KNOWN AS SPECIFICATION 01350), CERTIFIED AS A CHPS LOW-EMITTING MATERIAL IN THE COLLABORATIVE FOR HIGH PERFORMANCE SCHOOLS (CHPS) HIGH PERFORMANCE PRODUCTS DATABASE
  2. PRODUCTS CERTIFIED UNDER UL GREENGUARD GOLD (FORMERLY THE GREENGUARD CHILDREN & SCHOOLS PROGRAM)
  3. CERTIFICATION UNDER THE RESILIENT FLOOR COVERING INSTITUTE (RFCI) FLOORSCORE PROGRAM.
  4. MEET THE CALIFORNIA DEPARTMENT OF PUBLIC HEALTH, "STANDARD METHOD FOR THE TESTING AND EVALUATION OF VOLATILE ORGANIC CHEMICAL EMISSIONS FROM INDOOR SOURCES USING ENVIRONMENTAL CHAMBERS," VERSION 1.1, FEBRUARY 2010 (ALSO KNOWN AS SPECIFICATION 01350)

4.504.5 COMPOSITE WOOD PRODUCTS

- HARDWOOD PLYWOOD, PARTICLEBOARD AND MEDIUM DENSITY FIBERBOARD COMPOSITE WOOD PRODUCTS USED ON THE INTERIOR OR EXTERIOR OF THE BUILDING SHALL MEET THE REQUIREMENTS FOR FORMALDEHYDE AS SPECIFIED IN THE AIR RESOURCES BOARD'S AIR TOXICS CONTROL MEASURE FOR COMPOSITE WOOD (17 CCR 93120 ET. SEQ.), AS SHOWN IN TABLE 4.504.5. DOCUMENTATION IS REQUIRED PER SECTION 4.504.5.1.
- DEFINITION OF COMPOSITE WOOD PRODUCTS: COMPOSITE WOOD PRODUCTS INCLUDE HARDWOOD PLYWOOD, PARTICLEBOARD, AND MEDIUM DENSITY FIBERBOARD. "COMPOSITE WOOD PRODUCTS" DO NOT INCLUDE HARDBOARD, STRUCTURAL PLYWOOD, STRUCTURAL PANELS, STRUCTURAL COMPOSITE LUMBER, ORIENTED STRAND BOARD, GLUED LAMINATED TIMBER, PREFABRICATED WOOD I-JOISTS, OR FINGER-JOINED LUMBER, ALL AS SPECIFIED IN CCR, TITLE 17, SECTION 93120.1(A).

4.504.5.1 DOCUMENTATION

- VERIFICATION OF COMPLIANCE SHALL BE PROVIDED AS REQUESTED BY THE ENFORCING AGENCY, AND AS REQUIRED IN SECTION 4.504.5.1.

DIVISION 4.5 – ENVIRONMENTAL QUALITY (INTERIOR MOISTURE CONTROL)
4.505.2 CONCRETE SLAB FOUNDATIONS

- CONCRETE SLAB FOUNDATIONS OR CONCRETE SLAB-ON-GROUND FLOORS REQUIRED TO HAVE A VAPOR RETARDER BY THE CALIFORNIA BUILDING CODE, CHAPTER 19, OR THE CALIFORNIA RESIDENTIAL CODE, CHAPTER 5, RESPECTIVELY, SHALL ALSO COMPLY WITH THIS SECTION.

4.505.2.1 CAPILLARY BREAK

- A CAPILLARY BREAK SHALL BE INSTALLED IN COMPLIANCE WITH AT LEAST 1 OF THE FOLLOWING:
  1. A 4-INCH THICK BASE OF 1/2-INCH OR LARGER CLEAN AGGREGATE SHALL BE PROVIDED WITH A VAPOR RETARDER IN DIRECT CONTACT WITH CONCREATE AND A CONCRETE MIX DESIGN WHICH WILL ADDRESS BLEEDING, SHRINKAGE AND CURLING SHALL BE USED. FOR ADDITIONAL INFORMATION, SEE AMERICAN CONCRETE INSTITUTE, ACI 302.2R-06.
  2. OTHER EQUIVALENT METHODS APPROVED BY THE ENFORCING AGENCY.
  3. A SLAB DESIGN SPECIFIED BY A LICENSED DESIGN PROFESSIONAL.

4.505.3 MOISTURE CONTENT OF BUILDING MATERIALS

- BUILDING MATERIALS WITH VISIBLE SIGNS OF WATER DAMAGE SHALL NOT BE INSTALLED. WALL AND FLOOR FRAMING SHALL NOT BE ENCLOSED WHEN THE FRAMING MEMBERS EXCEED 19% MOISTURE CONTENT. MOISTURE CONTENT SHALL BE VERIFIED IN COMPLIANCE WITH THE FOLLOWING:
  1. MOISTURE CONTENT SHALL BE DETERMINED WITH EITHER A PROBE-TYPE OR A CONTACT-TYPE MOISTURE METER. EQUIVALENT MOISTURE VERIFICATION METHODS MAY BE APPROVED BY THE ENFORCING AGENCY AND SHALL SATISFY REQUIREMENTS IN SECTION 101.8.
  2. MOISTURE READINGS SHALL BE TAKEN AT A POINT 2 FEET TO 4 FEET FROM THE GRADE-STAMPED END OF EACH PIECE TO BE VERIFIED.
  3. AT LEAST 3 RANDOM MOISTURE READINGS SHALL BE PERFORMED ON WALL AND FLOOR FRAMING WITH DOCUMENTATION ACCEPTABLE TO THE ENFORCING AGENCY PROVIDED AT THE TIME OF APPROVAL TO ENCLOSE THE WALL AND FLOOR FRAMING. INSULATION PRODUCTS WHICH ARE VISIBLY WET OR HAVE A HIGH MOISTURE CONTENT SHALL BE REPLACED OR ALLOWED TO DRY PRIOR TO ENCLOSURE IN WALL OR FLOOR CAVITIES. MANUFACTURERS' DRYING RECOMMENDATIONS SHALL BE FOLLOWED FOR WET-APPLIED INSULATION PRODUCTS PRIOR TO ENCLOSURE.

DIVISION 4.5 – ENVIRONMENTAL QUALITY (INDOOR AIR QUALITY & EXHAUST)
4.506.1 BATHROOM EXHAUST FANS

- EACH BATHROOM SHALL BE MECHANICALLY VENTILATED AND SHALL COMPLY WITH THE FOLLOWING:
  1. FANS SHALL BE ENERGY STAR COMPLIANT AND BE DUCTED TO TERMINATE OUTSIDE THE BUILDING.
  2. UNLESS FUNCTIONING AS A COMPONENT OF A WHOLE HOUSE VENTILATION SYSTEM, FANS MUST BE CONTROLLED BY A HUMIDITY CONTROL.

CAL GREEN CONT.

  A. HUMIDITY CONTROLS SHALL BE CAPABLE OF MANUAL OR AUTOMATIC ADJUSTMENT BETWEEN A RELATIVE HUMIDITY RANGE OF LESS THAN 50% TO A MAXIMUM OF 80%.
  B. A HUMIDITY CONTROL MAY BE A SEPARATE COMPONENT TO THE EXHAUST FAN AND IS NOT REQUIRED TO BE INTEGRAL OR BUILT-IN.

NOTE: FOR CALGREEN A "BATHROOM" IS A ROOM WHICH CONTAINS A BATHTUB, SHOWER, OR TUB/SHOWER COMBINATION. FANS OR MECHANICAL VENTILATION IS REQUIRED IN EACH BATHROOM.

DIVISION 4.5 – ENVIRONMENTAL QUALITY (ENVIRONMENTAL COMFORT)
4.507.2 HEATING AND AIR CONDITIONING SYSTEM DESIGN

- HEATING AND AIR CONDITIONING SYSTEMS SHALL BE SIZED, DESIGNED, AND EQUIPMENT SELECTED USING THE FOLLOWING METHODS:
  1. THE HEAT LOSS AND HEAT GAIN IS ESTABLISHED ACCORDING TO ANSI/ACCA 2 MANUAL J – 2011 (RESIDENTIAL LOAD CALCULATION), ASHRAE HANDBOOKS OR OTHER EQUIVALENT DESIGN SOFTWARE OR METHODS.
  2. DUCT SYSTEMS ARE SIZED ACCORDING TO ANSI/ACCA 1 MANUAL D – 2014 (RESIDENTIAL DUCT SYSTEMS), ASHRAE HANDBOOKS OR OTHER EQUIVALENT DESIGN SOFTWARE OR METHODS.
  3. SELECT HEATING AND COOLING EQUIPMENT ACCORDING TO ANSI/ACCA 3 MANUAL S – 2014 (RESIDENTIAL EQUIPMENT SELECTION) OR OTHER EQUIVALENT DESIGN SOFTWARE OR METHODS.

EXCEPTION: USE OF ALTERNATE DESIGN TEMPERATURES NECESSARY TO ENSURE THE SYSTEMS FUNCTIONS ARE ACCEPTABLE.

CHAPTER 7 – INSTALLER & SPECIAL INSPECTOR QUALIFICATION (QUALIFICATIONS, VERIFICATIONS)
702.1 INSTALLER TRAINING

- HVAC SYSTEM INSTALLERS SHALL BE TRAINED AND CERTIFIED IN THE PROPER INSTALLATION OF HVAC SYSTEMS AND EQUIPMENT BY A RECOGNIZED TRAINING OR CERTIFICATION PROGRAM. EXAMPLES OF ACCEPTABLE HVAC TRAINING AND CERTIFICATION PROGRAMS INCLUDE BUT ARE NOT LIMITED TO THE FOLLOWING:
  1. STATE CERTIFIED APPRENTICESHIP PROGRAMS.
  2. PUBLIC UTILITY TRAINING PROGRAMS.
  3. TRAINING PROGRAMS SPONSORED BY TRADE, LABOR OR STATEWIDE ENERGY CONSULTING OR VERIFICATION ORGANIZATIONS.
  4. PROGRAMS SPONSORED BY MANUFACTURING ORGANIZATIONS.
  5. OTHER PROGRAMS ACCEPTABLE TO THE ENFORCING AGENCY.

702.2 SPECIAL INSPECTION

- SPECIAL INSPECTORS MUST BE QUALIFIED AND ABLE TO DEMONSTRATE COMPETENCE TO THE ENFORCING AGENCY IN THE DISCIPLINE IN WHICH THEY ARE INSPECTING.

703.1 DOCUMENTATION

- DOCUMENTATION OF COMPLIANCE SHALL INCLUDE, BUT IS NOT LIMITED TO, CONSTRUCTION DOCUMENTS, PLANS, SPECIFICATIONS, BUILDER OR INSTALLER CERTIFICATION, INSPECTION REPORTS, OR OTHER METHODS ACCEPTABLE TO THE LOCAL ENFORCING AGENCY. OTHER SPECIFIC DOCUMENTATION OR SPECIAL INSPECTIONS NECESSARY TO VERIFY COMPLIANCE ARE SPECIFIED IN PROPRIATE SECTIONS OF CALGREEN.

WRITTEN DIMENSIONS SHALL HAVE PRECEDENCE OVER SCALE DIMENSIONS. contractors and home owner builders shall verify and be responsible for dimensions and conditions of the project. DR Designs must be notified of any variation from the dimensions, conditions and specifications appearing on this plan.

DR DESIGNS
(530) 559 - 2539

NEW CONSTRUCTION

632 ZION STREET
NEVADA CITY, CA

CALGreen
Compliances

DUSTIN RUCKMAN

REVISIONS

1		
2		

APN# 005-230-010-000

19-0076 | 12/27/2019

AG1

STAPLE HERE
STAPLE HERE
STAPLE HERE
STAPLE HERE
STAPLE HERE

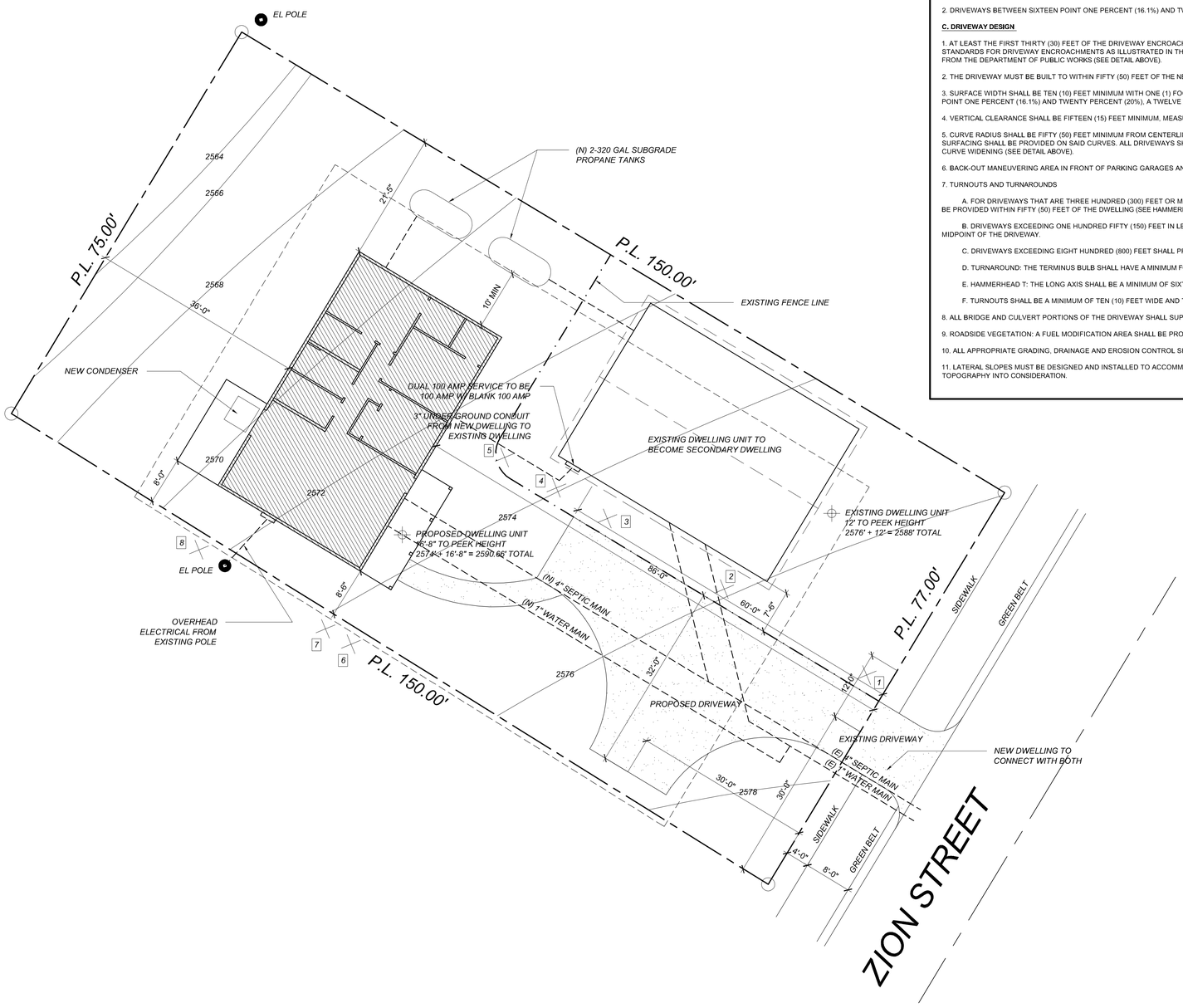

SITE PLAN

SCALE 1"=10'

PRIVATE DRIVEWAY CONSTRUCTION STANDARDS (SEC. L-XVI 3.2 LUDC)

ALL NEWLY CONSTRUCTED SINGLE FAMILY RESIDENCES SHALL BE SERVED BY A DRIVEWAY. ANY SUBDIVISION PROPOSING THAT TWO (2) LOTS BE SERVED BY A COMMON DRIVEWAY SHALL HAVE THE DRIVEWAY CONSTRUCTED PRIOR TO THE MAP RECORDATION. THE DRIVEWAY SHALL MEET THE FOLLOWING CONSTRUCTION STANDARDS AS ADMINISTERED BY THE BUILDING DEPARTMENT THROUGH A DRIVEWAY PERMIT WHEN A GRADING PERMIT IS NOT APPLICABLE. STANDARDS DO NOT APPLY TO DRIVEWAYS THAT ARE LESS THAN FIFTY (50) FEET OR LESS IN LENGTH.

A. DRIVEWAY GRADE

1. BELOW 4,000 FEET ELEVATION, DRIVEWAY GRADE SHALL NOT EXCEED TWENTY PERCENT (20%) UNLESS A PETITION FOR EXCEPTIONS IS SUPPORTED BY THE COUNTY FIRE MARSHAL OR HIS OR HER APPOINTED DESIGNEE AND GRANTED BY THE PLANNING AGENCY HAVING JURISDICTION OVER THE LAND USE ENTITLEMENT. NOTWITHSTANDING SEC. L-XVI 2.6, EXCEPTIONS TO STANDARDS, THERE SHALL BE NO EXCEPTIONS GRANTED FOR GRADES IN EXCESS OF TWENTY-FIVE PERCENT (25%).

2. AT OR ABOVE 4,000 FEET ELEVATION, DRIVEWAY GRADE SHALL NOT EXCEED SIXTEEN PERCENT (16%) MAXIMUM. NOTWITHSTANDING SEC. L-XVI 2.6, EXCEPTIONS TO STANDARDS, THERE SHALL BE NO EXCEPTIONS GRANTED FOR GRADES IN EXCESS OF SIXTEEN PERCENT (16%) WHERE ELEVATIONS RANGE ABOVE 4,000 FEET.

B. DRIVEWAY SURFACE

1. DRIVEWAY SURFACES SHALL BE CAPABLE OF SUPPORTING A 40,000 POUND LEGALLY-LOADED VEHICLE AS OUTLINED BELOW:

A. DRIVEWAYS AND SEGMENTS THEREOF THAT ARE BETWEEN ZERO (0%) AND SIXTEEN PERCENT (16%) GRADE SHALL BE CAPABLE OF SUPPORTING A 40,000 POUND LEGALLY LOADED VEHICLE AS CERTIFIED BY A REGISTERED CIVIL ENGINEER, OR A MINIMUM OF FOUR (4) INCH CLASS II AGGREGATE BASE (SEE DETAIL ABOVE).

B. DRIVEWAYS AND SEGMENTS THEREOF THAT ARE SIXTEEN POINT ONE PERCENT (16.1%) GRADE AND ABOVE, SHALL BE DESIGNED AND CERTIFIED BY A REGISTERED CIVIL ENGINEER. PRIOR TO FOUNDATION INSPECTION, THE ENGINEER SHALL PROVIDE STAMPED AND SIGNED WRITTEN VERIFICATION TO THE COUNTY FIRE MARSHAL OR HIS OR HER APPOINTED DESIGNEE THAT THE ROUGH GRADE COMPLIES WITH THE SITE PLAN. PRIOR TO, OR CONCURRENT WITH, FINAL INSPECTION, THE ENGINEER SHALL PROVIDE STAMPED AND SIGNED WRITTEN VERIFICATION THAT THE FINAL DRIVEWAY COMPLIES WITH THE SITE PLAN.

2. DRIVEWAYS BETWEEN SIXTEEN POINT ONE PERCENT (16.1%) AND TWENTY PERCENT (20.0%) GRADE SHALL BE ENGINEERED WITH AN ALL-WEATHER SURFACE.

C. DRIVEWAY DESIGN

1. AT LEAST THE FIRST THIRTY (30) FEET OF THE DRIVEWAY ENCROACHMENT FROM THE EDGE OF PAVEMENT OF THE PRIMARY ROADWAY SHALL CONFORM TO THE DESIGN STANDARDS FOR DRIVEWAY ENCROACHMENTS AS ILLUSTRATED IN THE NEVADA COUNTY DEPARTMENT OF PUBLIC WORKS STANDARDS DRAWINGS, AVAILABLE FROM THE DEPARTMENT OF PUBLIC WORKS (SEE DETAIL ABOVE).

2. THE DRIVEWAY MUST BE BUILT TO WITHIN FIFTY (50) FEET OF THE NEAREST POINT OF EACH DWELLING UNIT.

3. SURFACE WIDTH SHALL BE TEN (10) FEET MINIMUM WITH ONE (1) FOOT SHOULDERS FOR DRIVEWAY GRADES UP TO SIXTEEN PERCENT (16%). FOR GRADES BETWEEN SIXTEEN POINT ONE PERCENT (16.1%) AND TWENTY PERCENT (20%), A TWELVE (12) FOOT MINIMUM SURFACE WIDTH WITH ONE (1) FOOT SHOULDERS IS REQUIRED.

4. VERTICAL CLEARANCE SHALL BE FIFTEEN (15) FEET MINIMUM, MEASURED FROM THE OUTSIDE EDGE OF THE SHOULDER.

5. CURVE RADIUS SHALL BE FIFTY (50) FEET MINIMUM FROM CENTERLINE. FOR ALL DRIVEWAY RADII LESS THAN ONE HUNDRED (100) FEET, AN ADDITIONAL FOUR (4) FEET OF SURFACING SHALL BE PROVIDED ON SAID CURVES. ALL DRIVEWAYS SHALL ALSO COMPLY WITH LAND USE AND DEVELOPMENT CODE SECTION L-XVII 3.4.F, DESIGN GEOMETRICS: CURVE WIDENING (SEE DETAIL ABOVE).

6. BACK-OUT MANEUVERING AREA IN FRONT OF PARKING GARAGES AND OPEN PARKING STALLS SHALL BE TWENTY-FOUR (24) FEET.

7. TURNOUTS AND TURNAROUNDS

A. FOR DRIVEWAYS THAT ARE THREE HUNDRED (300) FEET OR MORE IN LENGTH, A TURNAROUND OR HAMMERHEAD WITH A MAXIMUM GRADE OF TWELVE (12) PERCENT SHALL BE PROVIDED WITHIN FIFTY (50) FEET OF THE DWELLING (SEE HAMMERHEAD DETAIL ABOVE).

B. DRIVEWAYS EXCEEDING ONE HUNDRED FIFTY (150) FEET IN LENGTH, BUT LESS THAN EIGHT HUNDRED (800) FEET IN LENGTH, SHALL PROVIDE A TURNOUT NEAR THE MIDPOINT OF THE DRIVEWAY.

C. DRIVEWAYS EXCEEDING EIGHT HUNDRED (800) FEET SHALL PROVIDE TURNOUTS NO MORE THAN FOUR HUNDRED (400) FEET APART.

D. TURNAROUND: THE TERMINUS BULB SHALL HAVE A MINIMUM FORTY (40) FOOT RADIUS.

E. HAMMERHEAD T: THE LONG AXIS SHALL BE A MINIMUM OF SIXTY (60) FEET AND THE LEG SHALL BE A MINIMUM OF FORTY (40) FEET (SEE DETAIL ABOVE).

F. TURNOUTS SHALL BE A MINIMUM OF TEN (10) FEET WIDE AND THIRTY (30) FEET LONG WITH A MINIMUM TWENTY-FIVE (25) FOOT TAPER ON EACH END.

8. ALL BRIDGE AND CULVERT PORTIONS OF THE DRIVEWAY SHALL SUPPORT A 40,000 POUND LEGALLY LOADED VEHICLE.

9. ROADSIDE VEGETATION: A FUEL MODIFICATION AREA SHALL BE PROVIDED FOR A DISTANCE OF 10 FEET ON EACH SIDE OF THE DRIVEWAY.

10. ALL APPROPRIATE GRADING, DRAINAGE AND EROSION CONTROL SHALL BE INCLUDED PURSUANT TO CHAPTER V OF THE LAND USE AND DEVELOPMENT CODE.

11. LATERAL SLOPES MUST BE DESIGNED AND INSTALLED TO ACCOMMODATE A MINIMUM TWO PERCENT (2%) AND MAXIMUM FOUR PERCENT (4%) CROSS SLOPES, TAKING TOPOGRAPHY INTO CONSIDERATION.

NOTES

COMPLIANCE:

NO STRUCTURE OR LAND SHALL HEREAFTER BE CONSTRUCTED, LOCATED, EXTENDED, CONVERTED OR ALTERED WITHOUT FULL COMPLIANCE WITH THE TERMS OF THIS CHAPTER AND OTHER APPLICABLE REGULATIONS OF THE LAND USE AND DEVELOPMENT CODE. VIOLATION OF THE REQUIREMENTS (INCLUDING VIOLATIONS OF CONDITIONS AND SAFEGUARDS) SHALL CONSTITUTE A MISDEMEANOR. NOTHING HEREIN SHALL PREVENT THE BOARD OF SUPERVISORS FROM TAKING SUCH LAWFUL ACTION AS NECESSARY TO PREVENT OR REMEDY ANY VIOLATION.

VEGETATION MANAGEMENT:

(CRC 337.1.5) ALL GRASS WITHIN 30'-0" OF STRUCTURES TO BE ELIMINATED, OR IGNITION RESISTANT WITH ALL TREES WITHIN 100'-0" TRIMMED UP TO 10'-0".

EROSION CONTROL:

- MEASURES TO BE USED PER NEVADA COUNTY LAND USE ORDINANCE LV 13-14
- EROSION AND SEDIMENT CONTROL MEASURES MUST REMAIN FUNCTIONAL AND BE MAINTAINED THROUGHOUT THE WINTER SEASON. FAILURE TO ADEQUATELY MAINTAIN EROSION AND SEDIMENT CONTROL MEASURES CONSTITUTE A VIOLATION OF THE ISSUED BUILDING OR OTHER PERMIT. MAINTAIN POSITIVE DRAINAGE AWAY FROM ALL STRUCTURES. SEED AND COVER ALL DISTURBED SOIL WITH MULCH.

TREE CALLOUT

1. 10" CEDAR
2. 15" WALNUT
3. 9" WALNUT
4. 20" WALNUT (SICK)
5. 6" HOLLY
6. 8" WALNUT
7. 12" WALNUT
8. 28" CEDAR

GENERAL COMMENTS

- EXACT LOCATION OF NEW HOME PLACEMENT MAY VARY. SITE VERIFICATIONS WILL BE NESSISARY FOR THE PLACEMENT OF STRUCTURE NOT TO BE INPEDED BY BUT NOT LIMITED TO: ROCKS, TREES, SLOPAGE, AND SMALL UNLOCATED STRUCTURES.
- EXISTING DRIVEWAY TO CONFORM WITH NEVADA COUNTYS PRIVATE DRIVEWAY CONSTRUCTION STANDARDS.
- THE GROUND IMMEDIATELY ADJACENT TO THE FOUNDATION SHALL BE SLOPED AWAY FROM BUILDING AT A SLOPE OF NOT LESS THAN 6" (5% SLOPE) IN THE FIRST 40FT MEASURED PERPENDICULAR TO THE FACE OF THE WALL. IMPERVIOUS SURFACES WITHIN 10 FT OF BUILDING SHALL BE SLOPED A MINIMUM OF 2% AWAY FROM BUILDING.

WRITTEN DIMENSIONS SHALL HAVE PRECEDENCE OVER SCALE DIMENSIONS. contractors and home owner builders shall verify and be responsible for dimensions and conditions of the project. DR Designs must be notified of any variation from the dimensions, conditions and specifications appearing on this plan.

DR DESIGNS
(530) 559 - 2539

NEW CONSTRUCTION
632 ZION STREET
NEVADA CITY, CA

SITE PLAN

DUSTIN RUCKMAN

REVISIONS

1	
2	

APN# 005-230-010-000

19-0076	12/30/2019

A2

STAPLE HERE

STAPLE HERE

CERTIFICATE OF COMPLIANCE - RESIDENTIAL PERFORMANCE COMPLIANCE METHOD

CF1R-PRF-01

Project Name: 632 Zion Residence
Calculation Date/Time: 08:13, Fri, Dec 27, 2019

Calculation Description: Title 24 Analysis
Input File Name: 632 Zion Residence.ribd16x

GENERAL INFORMATION

01	Project Name	632 Zion Residence			
02	Calculation Description	Title 24 Analysis			
03	Project Location	632 Zion Street			
04	City	Nevada City	05	Standards Version	Compliance 2017
06	Zip Code	95959	07	Compliance Manager Version	BEMCmpMgr 2016.3.1 (1149)
08	Climate Zone	CZ11	09	Software Version	EnergyPro 7.2
10	Building Type	Single Family	11	Front Orientation (deg/Cardinal)	135
12	Project Scope	Newly Constructed	13	Number of Dwelling Units	1
14	Total Cond. Floor Area (ft^2)	1288	15	Number of Zones	1
16	Slab Area (ft^2)	0	17	Number of Stories	1
18	Addition Cond. Floor Area(ft^2)	n/a	19	Natural Gas Available	No
20	Addition Slab Area (ft^2)	n/a	21	Glazing Percentage (%)	10.0%

COMPLIANCE RESULTS

01	Building Complies with Computer Performance
02	This building incorporates features that require field testing and/or verification by a certified HERS rater under the supervision of a CEC approved HERS provider.
03	This building incorporates one or more Special Features shown below

ENERGY USE SUMMARY

04	05	06	07	08
Energy Use (kTDV/ft^2-yr)	Standard Design	Proposed Design	Compliance Margin	Percent Improvement
Space Heating	30.16	23.17	6.99	23.2%
Space Cooling	50.84	49.10	1.74	3.4%
IAQ Ventilation	1.60	1.60	0.00	0.0%
Water Heating	25.00	23.03	2.05	8.2%
Photovoltaic Offset	----	0.00	0.00	----
Compliance Energy Total	107.60	96.90	10.78	10.0%

CERTIFICATE OF COMPLIANCE - RESIDENTIAL PERFORMANCE COMPLIANCE METHOD

CF1R-PRF-01

Project Name: 632 Zion Residence
Calculation Date/Time: 08:13, Fri, Dec 27, 2019

Calculation Description: Title 24 Analysis
Input File Name: 632 Zion Residence.ribd16x

ENERGY DESIGN RATING

Energy Design Rating (EDR) is an alternate way to express the energy performance of a building using a scoring system where 100 represents the energy performance of the Residential Energy Services (RESNET) reference home characterization of the 2006 International Energy Conservation Code (IECC) with California modeling assumptions. A score of zero represents the energy performance of a building that combines high levels of energy efficiency with renewable generation to "zero out" its TDV energy. Because EDR includes consideration of components not regulated by Title 24, Part 6 (such as domestic appliances and consumer electronics), it is not used to show compliance with Part 6 but may instead be used by local jurisdictions pursuing local ordinances under Title 24, Part 11 (CALGreen).
As a Standard Design building under the 2016 Building Energy Efficiency Standards is significantly more efficient than the baseline EDR building, the EDR of the Standard Design building is provided for Information. Similarly, the EDR score of the Proposed Design is provided separately from the EDR value of installed PV so that the effects of efficiency and renewable energy can both be seen

EDR of Standard Efficiency	EDR of Proposed Efficiency	EDR Value of Proposed PV + Battery	Final Proposed EDR
49.9	46.9	0.0	46.9

☐	Design meets Tier 1 requirement of 15% or greater code compliance margin (CALGreen A4.203.1.2.1) and QII verification prerequisite.
☐	Design meets Tier 2 requirement of 30% or greater code compliance margin (CALGreen A4.203.1.2.2) and QII verification prerequisite.
☐	Design meets Zero Net Energy (ZNE) Design Designation requirement for Single Family in climate zone CZ11 (CALGreen A4.203.1.2.3) including on-site photovoltaic (PV) renewable energy generation sufficient to achieve a Final Energy Design Rating (EDR) of zero or less. The PV System and QII must be verified.

Notes:
- Excess PV Generation EDR Credit: Bypassing PV size limit may violate Net Energy Metering (NEM) rules

REQUIRED SPECIAL FEATURES

The following are features that must be installed as condition for meeting the modeled energy performance for this computer analysis.

- Insulation below roof deck
- Ducts in crawl space

HERS FEATURE SUMMARY

The following is a summary of the features that must be field-verified by a certified HERS Rater as a condition for meeting the modeled energy performance for this computer analysis. Additional detail is provided in the building components tables below.

Building-level Verifications:
- High quality insulation installation (QII)
- IAQ mechanical ventilation

Cooling System Verifications:
- Minimum Airflow
- Verified EER
- Verified SEER
- Fan Efficacy Watts/CFM

HVAC Distribution System Verifications:
- Duct Sealing

Domestic Hot Water System Verifications:
- Pipe Insulation, All Lines

CERTIFICATE OF COMPLIANCE - RESIDENTIAL PERFORMANCE COMPLIANCE METHOD

CF1R-PRF-01

Project Name: 632 Zion Residence
Calculation Date/Time: 08:13, Fri, Dec 27, 2019

Calculation Description: Title 24 Analysis
Input File Name: 632 Zion Residence.ribd16x

BUILDING - FEATURES INFORMATION

01	02	03	04	05	06	07
Project Name	Conditioned Floor Area (ft^2)	Number of Dwelling Units	Number of Bedrooms	Number of Zones	Number of Ventilation Cooling Systems	Number of Water Heating Systems
632 Zion Residence	1288	1	3	1	0	1

ZONE INFORMATION

01	02	03	04	05	06	07
Zone Name	Zone Type	HVAC System Name	Zone Floor Area (ft^2)	Avg. Ceiling Height	Water Heating System 1	Water Heating System 2
1st f zone	Conditioned	HVACS1	1288	8	DHW Sys 1	n/a

OPAQUE SURFACES

01	02	03	04	05	06	07	08
Name	Zone	Construction	Azimuth	Orientation	Gross Area (ft^2)	Window & Door Area (ft^2)	Tilt (deg)
Exterior Front Wall	1st f zone	R-21 Wall	135	Front	414	125	90
Exterior Left Wall	1st f zone	R-21 Wall	225	Left	252	8	90
Exterior Rear Wall	1st f zone	R-21 Wall	315	Back	414	52.1	90
Exterior Right Wall	1st f zone	R-21 Wall	45	Right	252	30	90
Roof	1st f zone	R-38 HP Attic Option B	n/a	n/a	1288	n/a	n/a
Raised 1st Floor	1st f zone	R-19 Floor Crawlspace	n/a	n/a	1288	n/a	n/a

ATTIC

01	02	03	04	05	06	07	08
Name	Construction	Type	Roof Rise	Roof Reflectance	Roof Emittance	Radiant Barrier	Cool Roof
Attic 1st f zone	Attic Roof1st f zone	Ventilated	7	0.1	0.85	No	No

CERTIFICATE OF COMPLIANCE - RESIDENTIAL PERFORMANCE COMPLIANCE METHOD

CF1R-PRF-01

Project Name: 632 Zion Residence
Calculation Date/Time: 08:13, Fri, Dec 27, 2019

Calculation Description: Title 24 Analysis
Input File Name: 632 Zion Residence.ribd16x

FENESTRATION / GLAZING

01	02	03	04	05	06	07	08	09	10
Name	Type	Surface (Orientation-Azimuth)	Width (ft)	Height (ft)	Multiplier	Area (ft^2)	U-factor	SHGC	Exterior Shading
Front Window	Window	Exterior Front Wall (Front-135)	----	----	1	105.0	0.29	0.19	Insect Screen (default)
Left Window	Window	Exterior Left Wall (Left-225)	----	----	1	8.0	0.29	0.19	Insect Screen (default)
Rear Window	Window	Exterior Rear Wall (Back-315)	----	----	1	62.1	0.29	0.19	Insect Screen (default)
Right Window	Window	Exterior Right Wall (Right-45)	----	----	1	30.0	0.29	0.19	Insect Screen (default)

OPAQUE DOORS

01	02	03	04
Name	Side of Building	Area (ft^2)	U-factor
Front Door	Exterior Front Wall	20.0	0.50

OPAQUE SURFACE CONSTRUCTIONS

01	02	03	04	05	06	07
Construction Name	Surface Type	Construction Type	Framing	Total Cavity R-value	Winter Design U-factor	Assembly Layers
Attic Roof1st fl zone	Attic Roofs	Wood Framed Ceiling	2x4 Top Chord of Roof Truss @ 24 in. O.C.	R 13	0.078	• Around Roof Jacks: R-0.0 insul. • Cavity / Frame: R-13.0 / 2x4 Top Chrd • Roof Deck: Wood Sidingsheathingdecking • Roofing: Light Roof (Asphalt Shingle)
R-19 Floor Crawlspace	Floors Over Crawlspace	Wood Framed Floor	2x6 @ 16 in. O.C.	R 19 in 5-1/2 in. cavity (R-19)	0.050	• Floor Surface: Carpeted • Floor Deck: Wood Sidingsheathingdecking • Cavity / Frame: R-19 in 5-1/2 in. (R-19) / 2x6
R-21 Wall	Exterior Walls	Wood Framed Wall	2x6 @ 16 in. O.C.	R 21	0.069	• Inside Finish: Gypsum Board • Cavity / Frame: R-21 / 2x6 • Exterior Finish: 3 Coat Stucco
R-38 HP Attic Option B	Ceilings (below attic)	Wood Framed Ceiling	2x4 @ 24 in. O.C.	R 38	0.025	• Inside Finish: Gypsum Board • Cavity / Frame: R-3.1 / 2x4 • Over Ceiling Joists: R-28.9 insul.

BUILDING ENVELOPE - HERS VERIFICATION

01	02	03	04
Quality Insulation Installation (QII)	Quality Installation of Spray Foam Insulation	Building Envelope Air Leakage	CFM50
Required	Not Required	Not Required	n/a

CERTIFICATE OF COMPLIANCE - RESIDENTIAL PERFORMANCE COMPLIANCE METHOD

CF1R-PRF-01

Project Name: 632 Zion Residence
Calculation Date/Time: 08:13, Fri, Dec 27, 2019

Calculation Description: Title 24 Analysis
Input File Name: 632 Zion Residence.ribd16x

WATER HEATING SYSTEMS

01	02	03	04	05	06
Name	System Type	Distribution Type	Water Heater	Number of Heaters	Solar Fraction (%)
DHW Sys 1	DHW	(HERS req'd) Pipe Insulation, All Lines	DHW Heater 1 (1)	1	0%

WATER HEATERS

01	02	03	04	05	06	07	08	09	10	11	12
Name	Heater Element Type	Tank Type	Number of Units	Tank Volume (gal)	Uniform Energy Factor / Energy Factor / Efficiency	Input Rating / Pilot / Thermal Efficiency	Tank Insulation R-value (Int/Ext)	Standby Loss / Recovery Eff	First Hour Rating / Flow Rate	NEEA Heat Pump Brand / Model / Other	Tank Location or Ambient Condition
DHW Heater 1	Gas	Small Instantaneous	1	0	0.80 EF	<= 200 kBtu/hr	R-0/R-0	0	n/a	n/a	n/a

WATER HEATING - HERS VERIFICATION

01	02	03	04	05	06	07
Name	Pipe Insulation	Parallel Piping	Compact Distribution	Point of Use	Recirculation Control	Central DHW Distribution
DHW Sys 1 - 1/1	Pipe Insulation,All Lines	n/a	n/a	n/a	n/a	n/a

SPACE CONDITIONING SYSTEMS

01	02	03	04	05	06
SC Sys Name	System Type	Heating Unit Name	Cooling Unit Name	Fan Name	Distribution Name
HVACS1	Other Heating and Cooling System	Heating Component 1	Cooling Component 1	HVAC Fan 1	Air Distribution System 1

HVAC - HEATING UNIT TYPES

01	02	03	04
Name	System Type	Number of Units	Efficiency
Heating Component 1	CentFurnace	1	94 AFUE

HVAC - COOLING UNIT TYPES

01	02	03	04	05	06	07	08
			Efficiency				
Name	System Type	Number of Units	EER	SEER	Zonally Controlled	Compressor Type	HERS Verification
Cooling Component 1	SplitAirCond	1	12.5	15	Not Zonal	Single Speed	Cooling Component 1-hers-cool

CERTIFICATE OF COMPLIANCE - RESIDENTIAL PERFORMANCE COMPLIANCE METHOD

CF1R-PRF-01

Project Name: 632 Zion Residence
Calculation Date/Time: 08:13, Fri, Dec 27, 2019

Calculation Description: Title 24 Analysis
Input File Name: 632 Zion Residence.ribd16x

HVAC COOLING - HERS VERIFICATION

01	02	03	04	05	06
Name	Verified Airflow	Airflow Target	Verified EER	Verified SEER	Verified Refrigerant Charge
Cooling Component 1-hers-cool	Required	350	Required	Required	Not Required

HVAC - DISTRIBUTION SYSTEMS

01	02	03	04	05	06	07
Name	Type	Duct Leakage	Insulation R-value	Duct Location	Bypass Duct	HERS Verification
Air Distribution System 1	DuctsCrawl	Sealed and tested	8	Crawl space	None	Air Distribution System 1-hers-dist

HVAC DISTRIBUTION - HERS VERIFICATION

01	02	03	04	05	06	07	08
Name	Duct Leakage Verification	Duct Leakage Target (%)	Verified Duct Location	Verified Duct Design	Buried Ducts	Deeply Buried Ducts	Low-leakage Air Handler
Air Distribution System 1-hers-dist	Required	6.0	Not Required	Not Required	Not Required	Not Required	n/a

HVAC - FAN SYSTEMS

01	02	03	04
Name	Type	Fan Power (Watts/CFM)	HERS Verification
HVAC Fan 1	Single Speed PSC Furnace Fan	0.59	HVAC Fan 1-hers-fan

HVAC FAN SYSTEMS - HERS VERIFICATION

01	02	03
Name	Verified Fan Watt Draw	Required Fan Efficiency (Watts/CFM)
HVAC Fan 1-hers-fan	Required	0.58

IAQ (Indoor Air Quality) FANS

01	02	03	04	05	06
Dwelling Unit	IAQ CFM	IAQ Watts/CFM	IAQ Fan Type	IAQ Recovery Effectiveness(%)	HERS Verification
SFam IAQVentRpt	43	0.25	Default	0	Required

CERTIFICATE OF COMPLIANCE - RESIDENTIAL PERFORMANCE COMPLIANCE METHOD

CF1R-PRF-01

Project Name: 632 Zion Residence
Calculation Date/Time: 08:13, Fri, Dec 27, 2019

Calculation Description: Title 24 Analysis
Input File Name: 632 Zion Residence.ribd16x

DOCUMENTATION AUTHOR'S DECLARATION STATEMENT

I, I certify that this Certificate of Compliance documentation is accurate and complete.

Documentation Author Name: Gary Faucette	Documentation Author Signature: Gary Faucette
Company: A.V. Energy & Associates	Signature Date: 2019-12-27 08:19:17
Address: 43915 Gingham Avenue	CEA/HERS Certification Identification (if applicable):
City/State/Zip: Lancaster, CA 93535	Phone: 661-723-6694

RESPONSIBLE PERSON'S DECLARATION STATEMENT

I certify the following under penalty of perjury, under the laws of the State of California:
1. I am eligible under Division 3 of the Business and Professions Code to accept responsibility for the building design identified on this Certificate of Compliance.
2. I certify that the energy features and performance specifications identified on this Certificate of Compliance conform to the requirements of Title 24, Part 1 and Part 6 of the California Code of Regulations.
3. The building design features or system design features identified on this Certificate of Compliance are consistent with the information provided on other applicable compliance documents, worksheets, calculations, plans and specifications submitted to the enforcement agency for approval with this building permit application.

Responsible Designer Name: Dustin Ruckman	Responsible Designer Signature:
Company: Drdesigns	Date Signed: 2019-12-27 09:30:22
Address: 536 whiting street apt 3	License: na
City/State/Zip: Grass valley, CA 95945	Phone: 530-559-2539

Easy to Verify at CalCERTS.com

Digitally signed by CalCERTS. This digital signature is provided in order to secure the content of this registered document, and in no way implies Registration Provider responsibility for the accuracy of the information.

WRITTEN DIMENSIONS SHALL HAVE PRECEDENCE OVER SCALE DIMENSIONS. contractors and home owner builders shall verify and be responsible for dimensions and conditions of the project. DR Designs must be notified of any variation from the dimensions, conditions and specifications appearing on this plan.

DR DESIGNS
(530) 559 - 2539

NEW CONSTRUCTION

632 ZION STREET
NEVADA CITY, CA

TITLE 24 CF1R

DUSTIN RUCKMAN

REVISIONS
1
2

APN# 005-230-010-000

19-0076 12/27/2019

T24

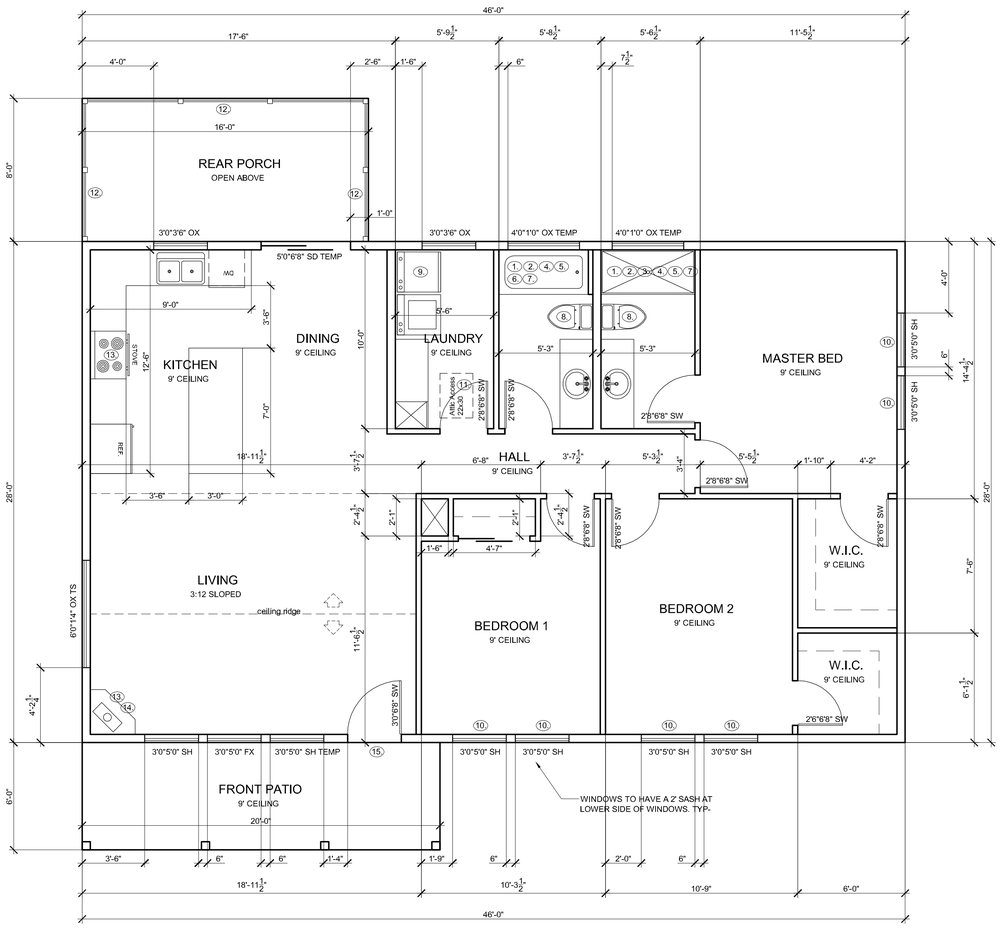

PROPOSED 1288 SF

FLOOR PLAN

SCALE 1/4" = 1'-0"

KEY NOTES

BATHROOMS

1. TEMPERED GLASS DOORS/ COVER FOR SHOWER AND BATH TUB.
2. SHOWER COMPARTMENT REGARDLESS OF SHAPE, HAVING A MINIMUM OF INTERIOR FLOOR AREA OF 1,024 SQUARE IN, AND ALSO CAPABLE OF ENCOMPASSING 30 IN CIRCLE. OPENING SHOWER ACCESS SHOULD NOT BE LESS THAN 22", PROVIDE WITH PRESSURE BALANCE OR THERMOSTATIC MIXING VALVE CONTROLS. WALL SHOULD HAVE A SMOOTH, HARD, NON ABSORBENT SURFACE (E.G... CERAMIC TILE) OVER AN APPROVED MOISTURE RESISTANT UNDERPAYMENT TO HEIGHT OF 72" ABOVE THE DRAIN INLET
3. HOT MOP OR SHEET MEMBRANE SYSTEM UNDER 11/2" MORTAR BED WITH REINFORCING, AND 1/2" THICK TILE (HARD SURFACE) IN SHOWER.
4. GLAZING IN ENCLOSURES FOR OR WALLS FACING HOT TUBS, WHIRLPOOLS, SAUNAS, SHOWERS, STEAM ROOMS AND BATHTUBS WHERE BOTTOM EDGE OF GLAZING IS LESS THAN 60" MEASURED VERTICALLY ABOVE ANY STANDING OR WALKING SURFACE SHALL BE TEMPERED. CRC R308.4
5. SHOWERS AND TUB SHOWER COMBINATIONS THAT A PRESSURE BALANCE OR THERMOSTATIC TYPE MIXING VALVE SHALL BE PROVIDE TO DELIVER A MAXIMUM WATER TEMPERATURE OF 120 DEGREES AT THE FIXTURE.
6. NON ADSORBEN SURFACE AT TUB WALLS SHOULD CONTINUE TO A HEIGHT OF 6FT ABOVE FINISHED FLOOR.
7. SHOWER: WATER-RESISTANT GYPSUM BOARD SHALL NOT BE INSTALLED IN A SHOWER OR TUB COMPARTMENT AND SHALL NOT BE USED WHERE THERE WILL BE DIRECT EXPOSURE TO WATER, OR IN AREAS SUBJECT TO CONTINUOUS HIGH HUMIDITY PER CRC SEC. R 702.3.8 & R702.3.8.1.
8. TOILETS SHALL NOT BE INSTALL CLOSER THAN 15" FROM CENTER TO ANY FINISH WALL OR OBSTRUCTION AND ALSO WITH A MINIMUM OF 24" CLEAR FLOOR SPACE IN FRONT OF THE TOILET.

LAUNDRY

9. SMOOTH METAL DUCT FOR DRYER EXHAUST EXTENDING TO OUTSIDE WITH BACK DRAFT DAMPER THIS DUCT SHALL NOT EXCEED A TOTAL COMBINED HORIZONTAL AND VERTICAL LENGTH OF 14' INCLUDING TWO 90° ELBOWS. TWO FEET SHALL BE DEDUCTED FOR EACH 90° ELBOW IN EXCESS OF TWO

BEDROOMS

10. EGRESS WINDOWS WITH MIN OF 5.7 SF OPENING, MIN. OF 24" HEIGHT CLEAR, AND 20" WIDE CLEAR IS REQUIRED. MAX. OF 44" FROM FINISH FLOOR TO THE OPENING BOTTOM OF WINDOWS

ATTIC SPACE

11. A MINIMUM OF 22"X30" READILY ACCESSIBLE ATTIC ACCESS WITH A MINIMUM OF 30" HEADROOM ABOVE FOR EACH SEPARATE ATTIC AREA. NO SHELVING BELOW ATTIC ACCESS. ATTIC MUST BE READILY ACCESSIBLE

STAIRS, DECKS, AND PORCHES

12. GUARD RAIL WITH 42" HEIGHT WITH BALUSTERS @ 4" OC MAX. DESIGNED TO CARRY 200# POINT LOAD @ ANY POINT ALONG THE TOP GUARD (SEE PAGE FOR DETAILS).

MISCELLANEOUS

13. GAS VENTS SHALL TERMINATE NOT LESS THAN 2' ABOVE THE HIGHEST POINT WHERE THEY PASS THROUGH THE ROOF AND AT LEAST 2 FEET HIGHER THAN ANY PORTION OF A BUILDING WITHIN 10'. GAS VENTS SMALLER THAN 12" IN DIAMETER MAY TERMINATE AT LEAST 1' ABOVE THE ROOFS UP TO A 6:12 PITCH AND AT LEAST 8' FROM ANY PORTION OF THE BUILDING. FOR HIGHER ROOF PITCHES REFER TO FIGURE 8-2. CMC 802.6.2
14. VENTS FOR FUEL BURNING APPLIANCES OTHER THAN DIRECT-VENT APPLIANCES SHALL TERMINATE AT LEAST 4' BELOW, 4' HORIZONTALLY FROM, OR 1' ABOVE ANY DOOR, OPERABLE WINDOW, OR GRAVITY AIR INLET INTO THE BUILDING. THE BOTTOM OF THE VENT SHALL BE LOCATED AT LEAST 12" ABOVE THE GRADE. CMC 802.8.2
15. MINIMUM 36" DEEP LANDING OUTSIDE THE MAIN EXTERIOR EGRESS DOOR. THE LANDING SHALL NOT BE MORE THAN 7.75" LOWER THAN THE THRESHOLD FOR THE MAIN ENTRANCE IN-SWING DOOR, (1-1/2" FOR OUT SWINGING). LANDINGS SHALL HAVE MAX. 2% SLOPE AWAY FROM FOUNDATION - TYP.
16. COMBUSTION AIR FROM EXTERIOR FOR GAS WITH GAS EXHAUST TO THE EXTERIOR. PROVIDE PRV DRAIN PIPE. TANK TO BE SEATED ON A 18" HIGH FLAT FORM IF NOT WALL MOUNTED. SEE TITLE 24 FOR SIZE SPECIFICATION, AND TYPE.

NOTE: HVAC & TANKLESS HW LOCATED IN CRAWLSPACE UNDER HOUSE.

KEY NOTES CONT.

WALL LEGEND

- ADDITIONAL DWELLING OR NON DWELLING AREA
- EXISTING WALL REMAINING UNCHANGED
- PROPOSED NEW WALL TO BE CONSTRUCTED
- EXISTING WALL, APPLIANCE, OR OTHER PERIPHERAL TO BE REMOVED / DEMO'D

WINDOW ABBREVIATIONS

REF	NOTES
OX	HORIZONTAL SLIDER
SH	SINGLE HUNG
FX	FIXED
TS	ABOVE TRANSOM
CS	CASEMENT
GR	GARDEN POPOUT / BAY
AW	AWNING

DOOR ABBREVIATIONS

REF	NOTES
SW	STANDARD SWING
DBL	DOUBLE DOOR
SL	SLIDER
FR	FRENCH
DBLFR	DOUBLE FRENCH
PD	POCKET
BN	BARN SLIDER
RL	ROLL UP

ROOM ABBREVIATIONS

REF	NOTES
N	NEW BUILT
R	REMODELED
C	CONVERTED
DE	TO BE DEMOLISHED
LE	TO BE LEGALIZED

GENERAL COMMENTS

- ALL EXTERIOR WALLS TO BE 2X6 UNLESS OTHERWISE NOTED ON FLOOR PLAN.
- ALL INTERIOR WALLS TO BE 2X4 UNLESS OTHERWISE NOTED ON FLOOR PLAN.
- REFER TO WILDLAND-URBAN INTERFACE FIRE ZONE REQUIREMENTS R327 ON PAGE A1.1.
- NON-REMOVABLE BACKFLOW PREVENTION DEVICES AT ALL EXTERIOR HOSE BIBS PER CPC SECTION 603.5.7
- LAUNDRY DRYER VENTING TO BE ROUTED TO EITHER ACCESSIBLE BASEMENT AREA OR EXTERIOR WALL.
- KITCHEN ISLAND SINK IS TO BE VENTED PER CPC SECTION 909.1.

WRITTEN DIMENSIONS SHALL HAVE PRECEDENCE OVER SCALE DIMENSIONS. contractors and home owner builders shall verify and be responsible for dimensions and conditions of the project. DR Designs must be notified of any variation from the dimensions, conditions and specifications appearing on this plan.

DR DESIGNS
(530) 559 - 2539

NEW CONSTRUCTION

632 ZION STREET
NEVADA CITY, CA

FLOOR PLAN

DUSTIN RUCKMAN

REVISIONS

1		
2		

APN# 005-230-010-000

19-0076	12/27/2019

A3

STAPLE HERE

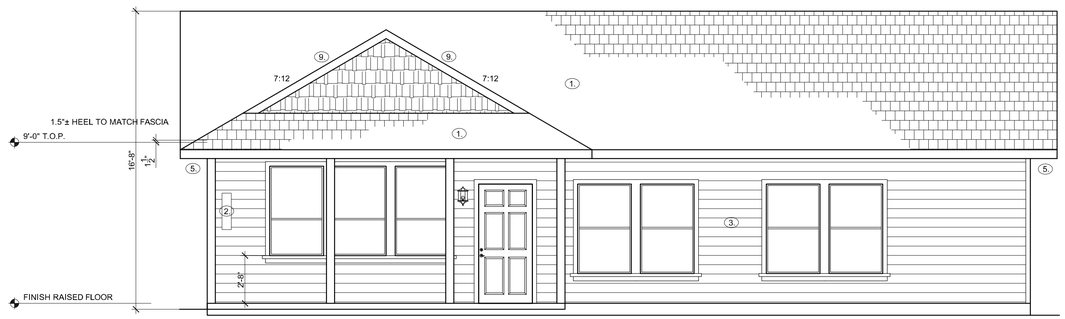

FRONT ELEVATION

SCALE 1/4" = 1'-0"

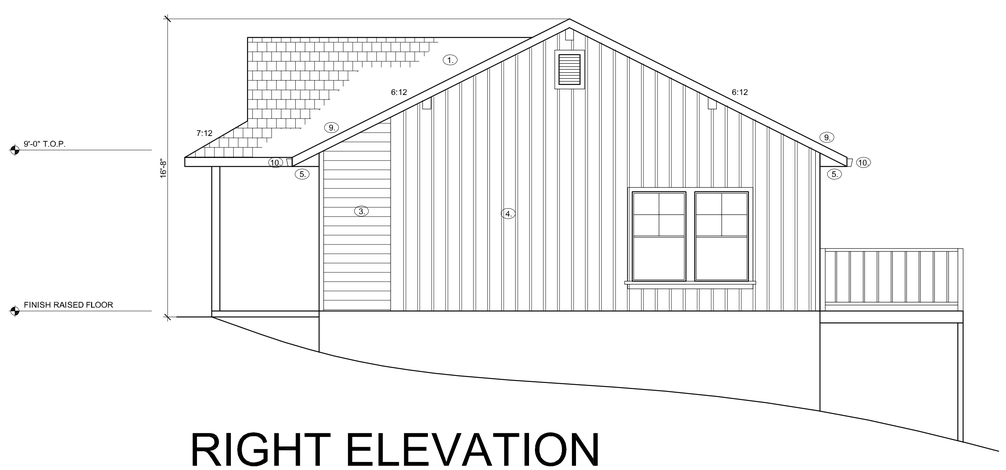

RIGHT ELEVATION

SCALE 1/4" = 1'-0"

ATTIC ROOF VENTILATION CALCULATIONS

AREA VENTILATED		VENTILATED RATE	REQUIRED AREA
1657		300 TH	795 SQ. IN.
TYPE	**SIZE**	**QUANTITY**	**AREA / UNIT** / **DESIGNED AREA**
GLPG1420 - ROOF	16"X20"	2	192 SQ. IN. / 384 SQ. IN.
STDH24 - ROOF	12"X12"	-	86 SQ. IN. / - SQ. IN.
S MODEL - ROOF	26"X20"	-	98 SQ. IN. / - SQ. IN.
FLAT MODEL - ROOF	29"X19"	-	99 SQ. IN. / - SQ. IN.
EAVE VENT - BLOCK	24"X3.5"	8	55 SQ. IN. / 440 SQ. IN.
			TOTAL 824 SQ. IN.

NOTES:

- VENT CALCULATION IS BASED FROM THE CONSTRUCTION METAL INC. PRODUCT @ GABLE ENDS. OR O'HANGIN'S INC. ON ROOF FINISHING. THE REPLACEMENT VENTS SHALL HAVE THE SAME VALUE OR BETTER.

CALCS:

- REQUIRED AREA SQ. IN. = VENTILATED AREA / 300 X 144

FOUNDATION VENTILATION CALCULATIONS

AREA VENTILATED		VENTILATED RATE	REQUIRED AREA
1288		150 TH	1236 SQ. IN.
TYPE	**SIZE**	**QUANTITY**	**AREA / UNIT** / **DESIGNED AREA**
ACCESS DOOR	22"X24"	-	320 SQ. IN. / - SQ. IN.
FLOOR VENT	8"X14"	14	94 SQ. IN. / 1316 SQ. IN.
FLOOR VENT	6"X14"	-	67 SQ. IN. / - SQ. IN.
-	-	-	- SQ. IN. / - SQ. IN.
			TOTAL 1316 SQ. IN.

NOTES:

- REQUIRED VENTILATION AREAS BASED ON SECTION CRC R408
- ALL VENTILATIONS SHOWN IN CALCULATIONS ARE MANUFACTURE BY "NOLL". NET FREE AREAS USED HAVE BEEN TAKEN FROM VENT MANUFACTURE CATALOGS. BUILDER MAY SUBSTITUTE DIFFERENT MANUFACTURER PRODUCTS THAN SHOWN PROVIDED THAT THE PRODUCTS MEET OR EXCEED NET FREE AREAS PER UNIT SHOWN IN THESE CALCULATIONS
- ONE VENT IS REQUIRED WITHIN 3 FEET OF EACH BUILDING CORNER.

CALCS:

- REQUIRED AREA SQ. IN. = VENTILATED AREA / 150 X 144

NOTES

LEGEND

1. CLASS A 40 YEAR LAMINATED DIMENSIONAL COMPOSITION ROOF FINISH OVER 15# FELT LAYER TYP.
2. ADDRESS NUMBER PLATE ON THE BUILDING ELEVATION WHICH SHALL BE CLEARLY VISIBLE FROM THE ADJACENT ACCESS STREET OR ROAD. THE NUMBERS SHALL BE NO LESS THE 4" IN HEIGHT AND 1/2" IN WIDTH AND SHALL BE OF A CONTRASTING COLOR AND ILLUMINATED AT NIGHT
3. EXTERIOR SHEETING - HORIZONTAL HARDI PLANK SIDING OVER MOISTURE BARRIER LAYER
4. EXTERIOR SHEETING - VERTICAL 8" LP SMARTSIDE OVER MOISTURE BARRIER LAYER
5. FIRE RATED EAVE SEE DETAIL 1/AD1
6. TEMPERED GLASS DOORS
7. TEMPERED GLASS WINDOW
8. GUARD RAIL/HAND RAIL (SEE FLOOR PLAN FOR SPECIFICATIONS AND REQUIREMENTS)
9. METAL DRIP EDGE IS REQUIRED FOR ALL COMPOSITION ROOF INSTALLATION
10. 5" SEAMLESS GUTTERS WITH LEAF GUARD GUTTER TOPPERS.

WRITTEN DIMENSIONS SHALL HAVE PRECEDENCE OVER SCALE DIMENSIONS. contractors and home owner builders shall verify and be responsible for dimensions and conditions of the project. DR Designs must be notified of any variation from the dimensions, conditions and specifications appearing on this plan.

DR DESIGNS
(530) 559 - 2539

NEW CONSTRUCTION

632 ZION STREET
NEVADA CITY, CA

ELEVATIONS

DUSTIN RUCKMAN

REVISIONS

1

2

APN# 005-230-010-000

19-0076 12/27/2019

A4.1

STAPLE HERE

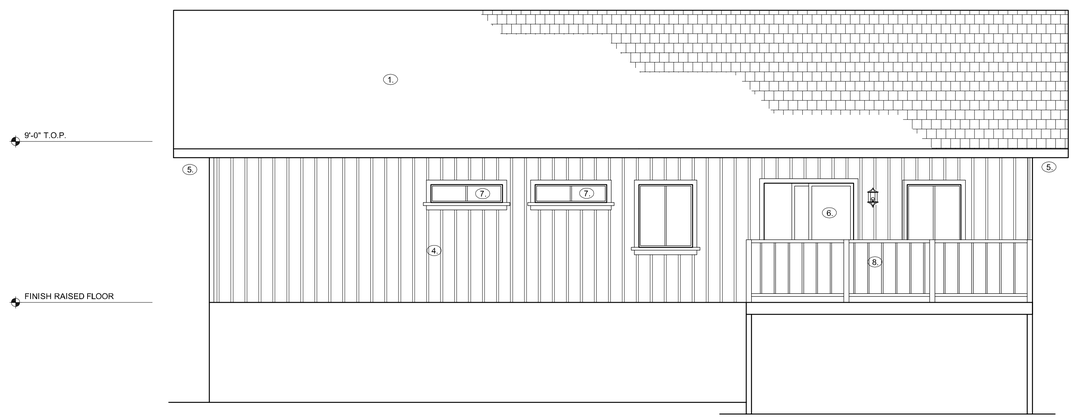

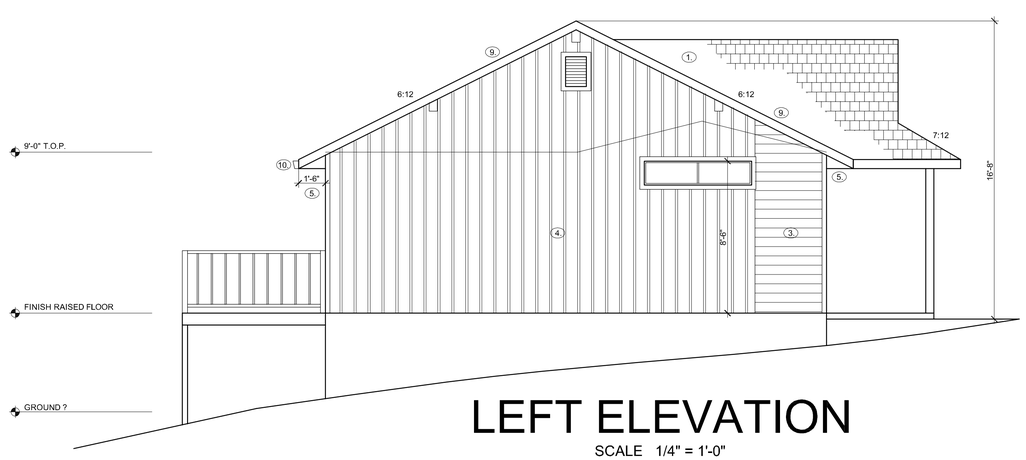

LEFT ELEVATION

SCALE 1/4" = 1'-0"

ATTIC ROOF VENTILATION CALCULATIONS

AREA VENTILATED		VENTILATED RATE	REQUIRED AREA
1657		300 TH	795 SQ. IN.
TYPE	**SIZE**	**QUANTITY**	**AREA / UNIT** / **DESIGNED AREA**
GLPG1420 - ROOF	16"X20"	2	192 SQ. IN. / 384 SQ. IN.
STDH24 - ROOF	12"X12"	-	86 SQ. IN. / - SQ. IN.
S MODEL - ROOF	26"X20"	-	98 SQ. IN. / - SQ. IN.
FLAT MODEL - ROOF	29"X19"	-	99 SQ. IN. / - SQ. IN.
EAVE VENT - BLOCK	24"X3.5"	8	55 SQ. IN. / 440 SQ. IN.
			TOTAL 824 SQ. IN.

NOTES:
- VENT CALCULATION IS BASED FROM THE CONSTRUCTION METAL INC. PRODUCT @ GABLE ENDS. OR O'HANGIN'S INC. ON ROOF FINISHING. THE REPLACEMENT VENTS SHALL HAVE THE SAME VALUE OR BETTER.

CALCS:
- REQUIRED AREA SQ. IN. = VENTILATED AREA / 300 X 144

FOUNDATION VENTILATION CALCULATIONS

AREA VENTILATED		VENTILATED RATE	REQUIRED AREA
1288		150 TH	1236 SQ. IN.
TYPE	**SIZE**	**QUANTITY**	**AREA / UNIT** / **DESIGNED AREA**
ACCESS DOOR	22"X24"	-	320 SQ. IN. / - SQ. IN.
FLOOR VENT	8"X14"	14	94 SQ. IN. / 1316 SQ. IN.
FLOOR VENT	6"X14"	-	67 SQ. IN. / - SQ. IN.
-	-	-	- SQ. IN. / - SQ. IN.
			TOTAL 1316 SQ. IN.

NOTES:
- REQUIRED VENTILATION AREAS BASED ON SECTION CRC R408
- ALL VENTILATIONS SHOWN IN CALCULATIONS ARE MANUFACTURE BY "NOLL". NET FREE AREAS USED HAVE BEEN TAKEN FROM VENT MANUFACTURE CATALOGS. BUILDER MAY SUBSTITUTE DIFFERENT MANUFACTURER PRODUCTS THAN SHOWN PROVIDED THAT THE PRODUCTS MEET OR EXCEED NET FREE AREAS PER UNIT SHOWN IN THESE CALCULATIONS
- ONE VENT IS REQUIRED WITHIN 3 FEET OF EACH BUILDING CORNER.

CALCS:
- REQUIRED AREA SQ. IN. = VENTILATED AREA / 150 X 144

NOTES

LEGEND

1. CLASS A 40 YEAR LAMINATED DIMENSIONAL COMPOSITION ROOF FINISH OVER 15# FELT LAYER TYP.
2. ADDRESS NUMBER PLATE ON THE BUILDING ELEVATION WHICH SHALL BE CLEARLY VISIBLE FROM THE ADJACENT ACCESS STREET OR ROAD. THE NUMBERS SHALL BE NO LESS THE 4" IN HEIGHT AND 1/2" IN WIDTH AND SHALL BE OF A CONTRASTING COLOR AND ILLUMINATED AT NIGHT
3. EXTERIOR SHEETING - HORIZONTAL HARDI PLANK SIDING OVER MOISTURE BARRIER LAYER
4. EXTERIOR SHEETING - VERTICAL 8" LP SMARTSIDE OVER MOISTURE BARRIER LAYER
5. FIRE RATED EAVE SEE DETAIL 1/AD1
6. TEMPERED GLASS DOORS
7. TEMPERED GLASS WINDOW
8. GUARD RAIL/HAND RAIL (SEE FLOOR PLAN FOR SPECIFICATIONS AND REQUIREMENTS)
9. METAL DRIP EDGE IS REQUIRED FOR ALL COMPOSITION ROOF INSTALLATION
10. 5" SEAMLESS GUTTERS WITH LEAF GUARD GUTTER TOPPERS.

WRITTEN DIMENSIONS SHALL HAVE PRECEDENCE OVER SCALE DIMENSIONS. contractors and home owner builders shall verify and be responsible for dimensions and conditions of the project. DR Designs must be notified of any variation from the dimensions, conditions and specifications appearing on this plan.

DR DESIGNS
(530) 559 - 2539

NEW CONSTRUCTION

632 ZION STREET
NEVADA CITY, CA

ELEVATIONS

DUSTIN RUCKMAN

REVISIONS
1
2

APN# 005-230-010-000

19-0076 | 12/27/2019

A4.2

STAPLE HERE
STAPLE HERE
STAPLE HERE
STAPLE HERE
STAPLE HERE
STAPLE HERE
STAPLE HERE

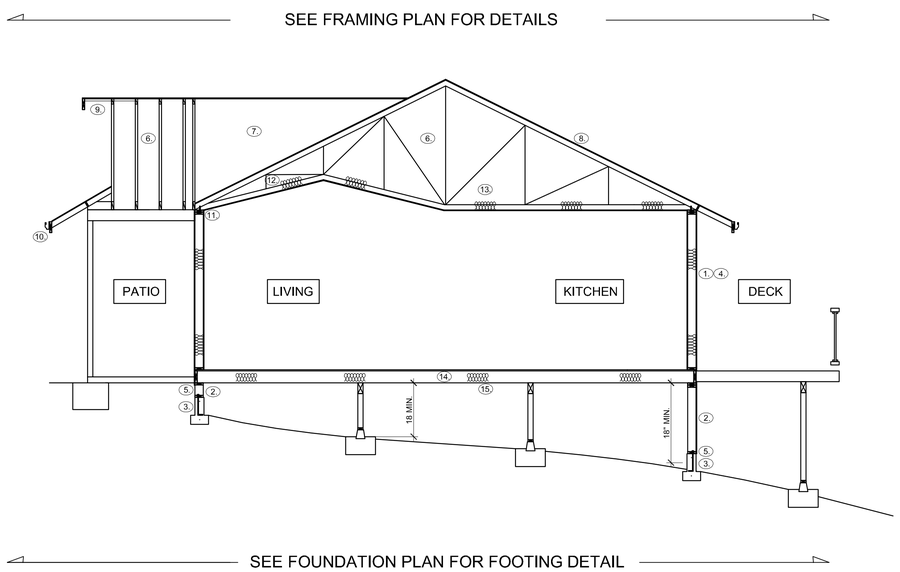

SECTION A

SCALE 1/4" = 1'-0"

KEY NOTES

1. R21 WALL INSULATION WITH 2X6 STUDS @ 16" @ CENTER (TYPICAL EXTERIOR WALLS)
2. CRIPPLE WALL WITH 2X STUDS @ 16" O.C.
3. A.B. AND STEEL REBARS PER PLAN.
4. EXTERIOR SHEETING PER PLAN
5. METAL FLASHING PER PLAN ALL AROUND BUILDING TYP.
6. PREMAMUFACTURED ROOF TRUSSES.
7. CAL-FILL SYTEM WITH MIN. OF 2X6 RAFTERS, AND 2X6 RIDGE WITH THE VERTICAL SUPPORTING @ 4'-0" O.C.
8. ROOF SHEETING PER PLAN
9. OUT RIGGER PER TRUSS CALCULATIONS
10. 2X FASCIAL BOARD W/METAL GUTTER TYP.
11. H1 SIMPSON CLIP TYP.
12. INSULATION IN ATTIC NEEDS TO HAVE A MINIMUN OF 1" OF AIR SPACE BETWEEN THE INSULATION AND ROOF SHEATHING
13. R38 CEILING INSULATION TYPICAL
14. 2X6 DF#2 @ 16" O.C. FLOOR JOIST PER PLAN
15. R19 MIN. FLOOR

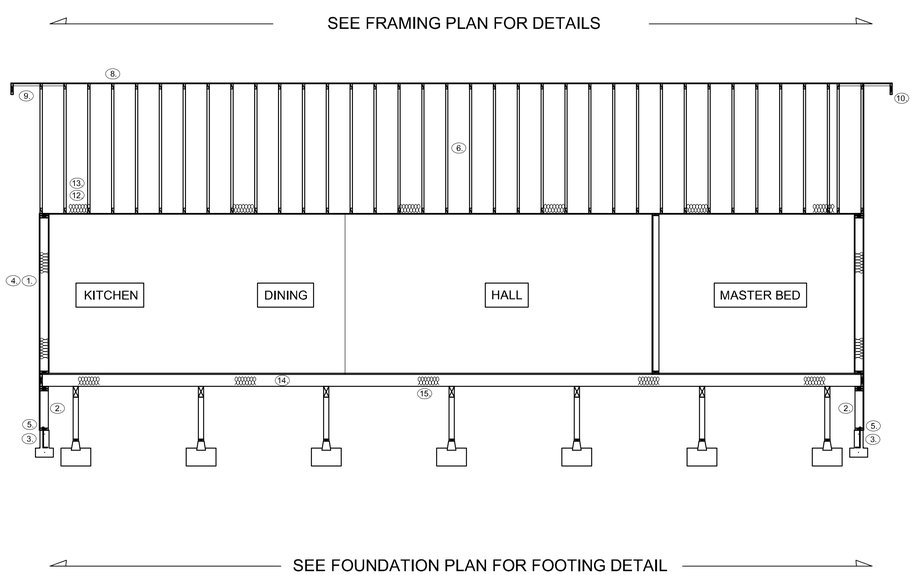

SECTION B

SCALE 1/4" = 1'-0"

WRITTEN DIMENSIONS SHALL HAVE PRECEDENCE OVER SCALE DIMENSIONS. contractors and home owner builders shall verify and be responsible for dimensions and conditions of the project. DR Designs must be notified of any variation from the dimensions, conditions and specifications appearing on this plan.

DR DESIGNS
(530) 559 - 2539

NEW CONSTRUCTION

632 ZION STREET
NEVADA CITY, CA

SECTION PLAN

DUSTIN RUCKMAN

REVISIONS

1

2

APN# 005-230-010-000

19-0076 12/27/2019

A5

STAPLE HERE

STAPLE HERE STAPLE HERE STAPLE HERE STAPLE HERE STAPLE HERE STAPLE HERE STAPLE HERE

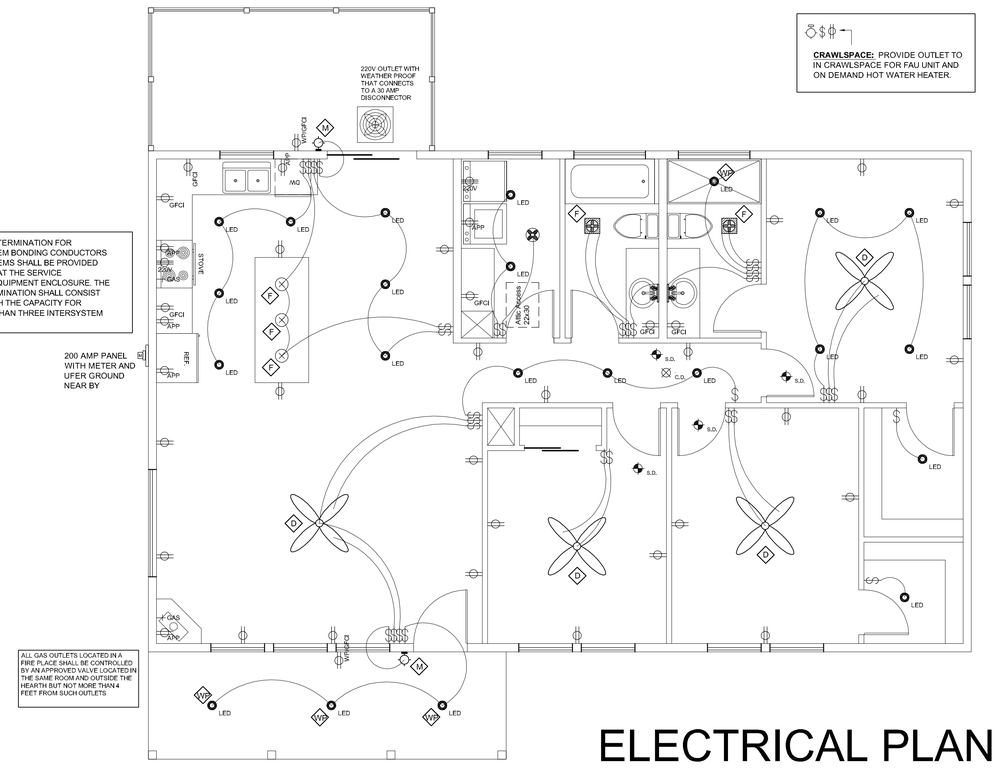

ELECTRICAL PLAN

SCALE 1/4" = 1'-0"

GROUNDING ELECTRODE (UFER)

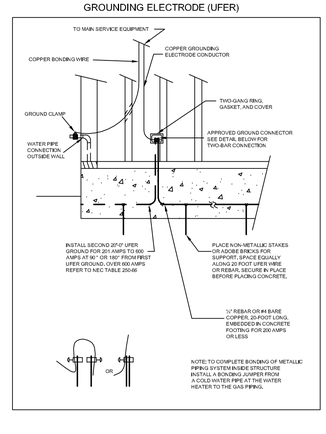

TYPE LEGEND

- F — THIS FIXTURE IS THE HIGH EFFICACY TYPE (FLOURESCENT WITH GU-24 SOCKET) OR L.E.D.
- M — MOTION CONTROL DETECTION, WITH STRONOMICAL TIME CLOCK, OR PHOTO CELL CONTROL W/ L.E.D.
- MS — MOTION CONTROL DETECTION SWITCH W/ L.E.D.
- D — DIMMER SWITCH TO CONTROL L.E.D. FIXTURE
- WP — SUITABLE FOR WET LOCATIONS W/ L.E.D.

ELECTRICAL SYMBOLS

- 110V 20A TAMPER-RESISTANT RECEPTACLE
- GFCI — 110V OUTLET ON G.F.I. CIRCUIT
- WP/GFCI — 110V G.F.I. OUTLET WITH WEATHER PROOF CASE OR PLUG CAP.
- 220V — 220V OUTLET
- GFCI — 110V OUTLET CEILING MOUNTED (FOR GARAGEDOOR OPENER GENERALLY)
- APP — 110V 20A APPLIANCE OUTLET W/ TAMPER RESISTANCE
- SWITCH
- GAS — GAS OUTLET
- DIS — GARBAGE DISPOSAL DEVICE SWITCH
- WALL MOUNTED FIXTURE
- CEILING HUNG CHANDELIER FIXTURE
- CEILING MOUNTED FIXTURE
- LED — RECESSED HIGH EFFICENCY L.E.D. LIGHT FIXTURE
- CEILING MOUNTED HIGH EFFICENCY FLUORESCENT FIXTURE
- CEILING FAN W/BUILT IN LIGHTING
- EXHAUST FAN
- EXHAUST FAN WITH COMPACTED HIGH EFFICENCY FLUORESCENT FIXTURE
- S.D. — SMOKE DETECTOR. PROVIDE HARD WIRED, INTERCONNECTED WITH BACK UP BATTERY.
- C.D. — CARBON MONOXIDE DETECTOR. PROVIDE HARD WIRED, INTERCONNECTED WITH BACK UP BATTERY.
- WALL MOUNTED VANITY LIGHT
- PENDANT DROP LIGHT FROM CEILING
- EV — ELECTRICAL OUTLET FOR ELECTRIC CAR CHARGER

NOTES

2016 CALIFORNIA ENERGY CODE:

-ALL LUMINAIRES MUST BE HIGH EFFICACY (CALIFORNIA ENERGY CODE 150.0(K)1A)

-LUMINARIES RECESSED IN INSULATED CEILINGS JUST MEET FIVE REQUIREMENTS (CALIFORNIA ENERGY CODE 150.0(K)1C):

- THEY MUST BE RATED FOR DIRECT INSULATION CONTACT (IC).
- THEY MUST BE CERTIFIED AS AIRTIGHT (AT) CONSTRUCTION.
- THEY MUST HAVE A SEALED GASKET OR CAULKING BETWEEN THE HOUSING AND CEILING TO PREVENT FLOW OF HEATED OR COOLED AIR OUT OF LIVING AREAS AND INTO THE CEILING CAVITY.
- THEY MAY NOT CONTAIN A SCREW BASE SOCKETS
- THEY SHALL CONTAIN A JA8 COMPLIANT LIGHT SOURCE.

-IN BATHROOMS, GARAGES, LAUNDRY ROOMS, AND UTILITY ROOMS, AT LEAST ON LUMINAIRE IN EACH OF THESE SPACES SHALL BE CONTROLLED BY A VACANCY SENSOR, (CALIFORNIA ENERGY CODE 150.0(K)2J)

-JOINT APPENDIX A (JA8) CERTIFIED LAMPS SHALL BE CONSIDERED HIGH EFFICACY. JA8 COMPLIANT LIGHT SOURCES SHALL BE CONTROLLED BY A VACANCY SENSOR OR DIMMER. (EXCEPTION: <70SF CLOSETS AND HALLWAY) (CALIFORNIA ENERGY CODE 150.0(K)2K)

-ALL EXTERIOR LIGHTING SHALL BE HIGH EFFICACY, BE CONTROLLED BY A MANUAL ON/OFF SWITCH AND HAVE ONE OF THE FOLLOWING CONTROLS (THE MANUAL SWITCH SHALL NOT OVERRIDE THE AUTOMATIC CONTROL DEVICE): (CALIFORNIA ENERGY CODE 150.0(K)3A)

- PHOTO-CONTROL AND MOTION SENSOR
- PHOTO-CONTROL AND AUTOMATIC TIME SWITCH CONTROL
- ASTRONOMICAL TIME CLOCK CONTROL TURNING LIGHTS OFF DURING THE DAY

-ALL HIGH EFFICACY LIGHT FIXTURES SHALL BE CERTIFIED AS "HIGH-EFFICACY" LIGHT FIXTURES BY THE CALIFORNIA ENERGY COMMISSION.

-CONTRACTOR SHALL PROVIDE THE HOMEOWNER WITH A LUMINAIRE SCHEDULE GIVING THE LAMPS USED IN THE LUMINAIRES INSTALLED. (CALIFORNIA ENERGY CODE 10-103(B))

-THE NUMBER OF BLANK ELECTRICAL BOXES MORE THAN 5 FEET ABOVE THE FINISHED FLOOR SHALL NOT BE GREATER THAN THE NUMBER OF BEDROOMS. THESE ELECTRICAL BOXES MUST BE SERVED BY A DIMMER, VACANCY SENSOR, OR FAN SPEED CONTROL. (CALIFORNIA ENERGY CODE 150(K)8)

NOTES CONT.

GFCI PROTECTION NOTES:

GFCI PROTECTION IS REQUIRED FOR ALL 15A, OR 20A, 125VRECEPTACLES INSTALLED IN THE FOLLOWING LOCATIONS

- SINKS- GFCI PROTECTION FOR RECEPTACLES IS REQUIRED WITHIN ARC MEASUREMENT OF 6FT. OF THE OUTSIDE EDGE OF A SINK.
- BATH TUBS OR SHOWER STALLS - GFCI PROTECTION IS REQUIRED FOR RECEPTACLES LOCATED WITHIN 6FT OF THE OUTSIDE EDGE OF A BATHTUB OR SHOWER STALL.
- LAUNDRY AREAS - RECEPTACLES INSTALLED IN LAUNDRY AREAS OF A DWELLING UNIT SHALL BE GFCI PROTECTED.
- DWELLING UNIT DISHWASHERS - OUTLETS SUPPLYING DISHWASHERS IN A DWELLING UNIT MUST BE GFCI PROTECTED PER 2016 CEC ART. CEC210.

ARC-FAULT CIRCUIT-INTERRUPTER PROTECTION

ALL 15A, OR 20A, 120V BRANCH CIRCUITS IN DWELLING UNITS SUPPLYING OUTLETS OR DEVICES IN KITCHENS, FAMILY ROOMS, DINING ROOMS, LIVING ROOMS, PARLORS, LIBRARIES, DENS, BEDROOMS, SUNROOMS, RECREATION ROOMS, CLOSETS, HALLWAYS, LAUNDRY AREAS, OR SIMILAR ROOMS OR AREAS SHALL BE ARC-FAULT CIRCUIT- INTERRUPTER PROTECTED IN ACCORDANCE WITH 2016 CEC ART.2010.012(A)

RECEPTACLE REQUIREMENTS:

- GFCI SHALL BE IN THE LAUNDRY AREA AND WITHIN 6 FEET OF SINK FOR REFRIGERATOR AND GARBAGE DISPOSAL. CEC 210.8A 910.
- GFCI PROTECTION IS REQUIRED ON ALL DISHWASHERS IN DWELLING UNITS. CEC 210.8(D).
- AFCI PROTECTION IS REQUIRED IN KITCHEN AND LAUNDRY AREAS. CEC 210.12 A.
- OUTDOOR RECEPTACLES SHALL BE READILY ACCESSIBLE FROM GRADE LEVEL. CEC 210.52 E1.
- IN EACH ATTACHED GARAGE AND IN EACH DETACHED GARAGE WITH ELECTRIC POWER, AT LEAST ONE RECEPTACLE OUTLET SHALL BE INSTALLED IN EACH VEHICLE BAY AND NOT MORE THAN 1.7 M (5 ½ FT) ABOVE THE FLOOR. 210.52(G)(1)
- ALL OUTDOOR RECEPTACLES TO HAVE EXTRA DUTY RATED IN USE COVERS. CEC 406.9 (1)
- AN EQUIPMENT GROUND CONDUCTOR IS REQUIRED IN ALL OUTDOOR HVAC EQUIPMENT IN LFMC AND EMT. CEC 440.9

GARAGE RECEPTACLE NOTES:

IN EACH SFD ATTACHED GARAGE AND EACH DETACHED GARAGE WITH ELECTRICAL POWER AT LEAST ONE RECEPTACLE SHALL BE FOR EACH CAR SPACE IN ADDITION TO RECEPTACLES REQUIRED FOR SPECIFIC EQUIPMENT. THEN BRANCH CIRCUIT SUPPLYING THE RECEPTACLE(S) SHALL NOT SUPPLY OUTLETS OUTSIDE OF THE GARAGE.

TAMPER-RESISTANT RECEPTACLES

TAMPER-RESISTANT RECEPTACLES IN THE DWELLING. ALL 125-VOLT, SINGLE PHASE, 15 AND 20-AMP RECEPTACLES SHALL BE LISTED TAMPER-RESISTANT RECEPTACLES. (THROUGHOUT) 2016 CEC ART. 406.12.

ELECTRIC VEHICLE CHARGING FOR NEW CONSTRUCTION:

- NEW ONE OR TWO-FAMILY DWELLINGS AND TOWNHOUSES WITH ATTACHED PRIVATE GARAGES SHALL INSTALL A LISTED RACEWAY TO ACCOMMODATE A DEDICATED 220-VOLT BRANCH CIRCUIT FOR AN EV CHARGER. THE RACEWAY SHALL NOT BE LESS THAN NOMINAL 1" INSIDE Ø. THE RACEWAY SHALL ORIGINATE AT THE MAIN SERVICE OR SUBPANEL AND SHALL TERMINATE INTO A LISTED ENCLOSURE IN CLOSE PROXIMITY TO THE PROPOSED LOCATION OF AN EV CHARGER. THE SERVICE PANEL AND/OR SUBPANEL SHALL PROVIDE CAPACITY TO INSTALL A 40 AMP MINIMUM DEDICATED BRANCH CIRCUIT AND SPACE(S) RESERVED TO PERMIT INSTALLATION OF A BRANCH CIRCUIT OVERCURRENT PROTECTIVE DEVICE.
- THE SERVICE PANEL OR SUBPANEL CIRCUIT DIRECTORY SHALL IDENTIFY THE OVERCURRENT PROTECTIVE DEVICE SPACES(S) RESERVED FOR FUTURE EV CHARGING AS "EV CAPABLE". THE RACEWAY TERMINATION LOCATION SHALL BE PERMANENTLY AND VISIBLY MARKED AS "EV CAPABLE".

ATTIC FURNACE NOTE:

THE DISTANCE FROM THE PASSAGEWAY ACCESS TO THE FURNACE SHALL NOT EXCEED 20 FEET MEASURED ALONG THE CENTER LINE OF THE PASSAGEWAY. THE PASSAGEWAY SHALL BE UNOBSTRUCTED AND SHALL HAVE CONTINUOUS SOLID FLOORING NOT LESS THAN 24 INCHES WIDE FROM THE ENTRANCE OPENING TO THE FURNACE. A LEVEL WORKING PLATFORM NOT LESS THAN 30 INCHES IN DEPTH AND WIDTH SHALL BE PROVIDED IN FRONT OF THE ENTIRE FIRE BOX SIDE OF THE WARM AIR FURNACE. IF THE FURNACE TEMPERATURE LIMIT CONTROL, AIR FILTER, FUEL CONTROL VALVE, VENT COLLAR, OR AIR HANDLING UNIT IS NOT SERVICEABLE FROM THE FIRE BOX SIDE OF THE FURNACE, A CONTINUOUS FLOOR NOT LESS THAN 24 INCHES IN WIDTH SHALL BE PROVIDED FROM THE PLATFORM IN FRONT OF THE FIRE BOX SIDE OF THE FURNACE TO AND IN FRONT OF THIS EQUIPMENT. A PERMANENT ELECTRIC OUTLET AND LIGHTING FIXTURE CONTROLLED BY A SWITCH LOCATED AT THE REQUIRED PASSAGEWAY OPENING SHALL BE PROVIDED AT OR NEAR THE FURNACE. 2016 CMC

PROVIDE FOR DEDICATED CIRCUITS FOR EACH FURNACE PER THE CEC SECTION 422.12.

NOTES CONT.

LAUNDRY ROOM NOTES:

- ALL EXHAUST DUCTING FROM DRYER SHALL BE EQUIPPED WITH A LISTED BACK DRAFT DAMPER AT OUTSIDE TERMINATION PER CMC SECTION 504.1.
- MINIMUM 4" DIAMETER DRYER EXHAUST DUCT SHALL BE INSTALLED PER CMC SECTION 504.3.1.
- EXHAUST FAN REQUIREMENTS. MINIMUM RATE IS 50 CFM INTERMITTENT OR 20 CFM CONTINUOUS PER CMC TABLE 403.7.

SMOKE DETECTOR NOTES:

- SMOKE ALARMS AND SMOKE DETECTORS SHALL NOT BE LOCATED WHERE AMBIENT CONDITIONS, INCLUDING HUMIDITY AND TEMPERATURE, ARE OUTSIDE THE LIMITS SPECIFIED BY THE MANUFACTURER'S PUBLISHED INSTRUCTIONS.
- SMOKE ALARMS AND SMOKE DETECTORS SHALL NOT BE LOCATED WITHIN UNFINISHED ATTICS OR GARAGES OR IN OTHER SPACES WHERE TEMPERATURES CAN FALL BELOW 40°F (4°C) OR EXCEED 100°F (38°C).
- WHERE THE MOUNTING SURFACE COULD BECOME CONSIDERABLY WARMER OR COOLER THAN THE ROOM, SUCH AS A POORLY INSULATED CEILING BELOW AN UNFINISHED ATTIC OR AN EXTERIOR WALL, SMOKE ALARMS AND SMOKE DETECTORS SHALL BE MOUNTED ON AN INSIDE WALL.
- SMOKE ALARMS OR SMOKE DETECTORS SHALL BE INSTALLED A MINIMUM OF 20 FEET HORIZONTAL DISTANCE FROM A PERMANENTLY INSTALLED COOKING APPLIANCE. EXCEPTION: IONIZATION SMOKE ALARMS WITH AN ALARM SILENCING SWITCH OR PHOTOELECTRIC SMOKE ALARMS SHALL BE PERMITTED TO BE INSTALLED 10 FEET (3 M) OR GREATER FROM A PERMANENTLY INSTALLED COOKING APPLIANCE. PHOTOELECTRIC SMOKE ALARMS SHALL BE PERMITTED TO BE INSTALLED GREATER THAN 6 FEET (1.8 M) FROM A PERMANENTLY INSTALLED COOKING APPLIANCE WHERE THE KITCHEN OR COOKING AREA AND ADJACENT SPACES HAVE NO CLEAR INTERIOR PARTITIONS AND THE 10FT DISTANCES WOULD PROHIBIT THE PLACEMENT OF A SMOKE ALARM OR SMOKE DETECTOR REQUIRED BY OTHER SECTIONS OF THE CODE. SMOKE ALARMS LISTED FOR USE IN CLOSE PROXIMITY TO A PERMANENTLY INSTALLED COOKING APPLIANCE.
- INSTALLATION NEAR BATHROOMS. SMOKE ALARMS SHALL BE INSTALLED NOT LESS THAN A 3 FOOT (0.91 M) HORIZONTAL DISTANCE FROM THE DOOR OR OPENING OF A BATHROOM THAT CONTAINS A BATHTUB OR SHOWER UNLESS THIS WOULD PREVENT PLACEMENT OF A SMOKE ALARM REQUIRED BY OTHER SECTIONS OF THE CODE.
- SMOKE ALARMS AND SMOKE DETECTORS SHALL NOT BE INSTALLED WITHIN A 36 IN. (910 MM) HORIZONTAL PATH FROM THE SUPPLY REGISTERS OF A FORCED AIR HEATING OR COOLING SYSTEM AND SHALL BE INSTALLED OUTSIDE OF THE DIRECT AIRFLOW FROM THOSE REGISTERS.
- SMOKE ALARMS AND SMOKE DETECTORS SHALL NOT BE INSTALLED WITHIN A 36 IN. (910 MM) HORIZONTAL PATH FROM THE BLADE OF A CEILING SUSPENDED (PADDLE) FAN.
- WHERE MORE THAN ONE SMOKE ALARMS REQUIRED TO BE INSTALLED WITHIN AN INDIVIDUAL DWELLING OR SLEEPING UNIT, THE SMOKE ALARMS SHALL BE INTERCONNECTED IN SUCH A MANNER THE THE ACTIVATION OF ONE ALARM WILL ACTIVATE ALL OF THE ALARMS IN THE INDIVIDUAL UNIT. THE ALARM SHALL BE CLEARLY AUDIBLE IN ALL BEDROOMS OVER BACKGROUND NOISE LEVELS WITH ALL INTERVENING DOORS CLOSED.

SMOKE ALARM NOTE

SMOKE ALARMS CANNOT BE INSTALLED WITHIN 36" OF THE TIP OF CEILING FAN R314.3.4

FAN NOTES:

KITCHEN AND BATH FANS RATED 3 SONES OR LESS ARE NOW REQUIRED 100CFM PER KITCHEN WITH INTERMITTED OPERATED, 50CFM PER BATHROOM WITH INTERMITTED OPERATED & 20 CFM WITH CONTINOUS OPERATED . DUCT SIZING LIST PER TABLE 7.1

PLUMBLING NOTE:

- HOT WATER SUPPLY PIPING 3/4" AND GREATER SHALL BE INSULATED PER CEC SECTION150.0 (J)2III
- ALL HOT WATER SUPPLY PIPING FROM THE HEATING SOURCE TO THE KITCHEN FIXTURES SHALL BE INSULATED PER CEC SECTION 150.0 (J)2.VI.

GENERAL COMMENTS

ELECTRICAL ALTERATION NOTE:

ALL OF THE ELECTRICAL TO BE REPLACE (TO COMPLY WITH NEW 2016 CEC) ARE SHOWN ON PLAN, OTHERWISE, EXISTING ELECTRICAL TO REMAIN ARE NOT SHOWN ON THIS PLAN

WRITTEN DIMENSIONS SHALL HAVE PRECEDENCE OVER SCALE DIMENSIONS. contractors and home owner builders shall verify and be responsible for dimensions and conditions of the project. DR Designs must be notified of any variation from the dimensions, conditions and specifications appearing on this plan.

DR DESIGNS
(530) 559 - 2539

NEW CONSTRUCTION

632 ZION STREET
NEVADA CITY, CA

ELECTRICAL

DUSTIN RUCKMAN

REVISIONS

1
2

APN# 005-230-010-000

19-0076 | 12/27/2019

E1

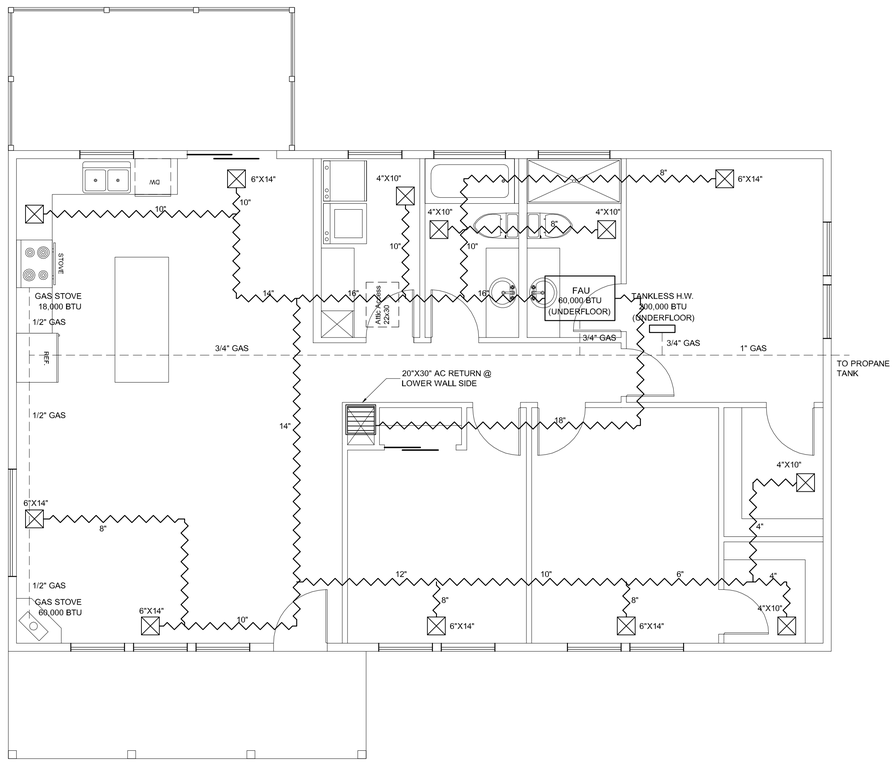

COMPRESSOR NOTE:
A. Provide anchorage for all the compressors per 2016 CMC
B. Provide a service receptacle within 25 feet of each compressor per 2016 CMC

MECHANICAL SUPPLY VENT NOTE:

SUPPLY VENTS MUST BE MORE THAN 36" HORIZONTAL AWAY FROM SMOKE DETECTORS AND NOT BE IN THE DIRECT AIRFLOW OF VENTS, PER NFPA 72, Section 29.8.3.4.

ATTIC FURNACE NOTE:
1. Access opening to be large enough to remove largest piece of equipment, but at least 22in. x 30in.
2. Access to equipment along an unobstructed passageway which: a) Large enough to remove equipment, minimum 30in.x 30in. b) Not more than 20 ft. long at center line of passageway and continuous solid flooring not less than 24in. wide CMC 304.0
3. A level service space at least 30 in. deep and 30in. wide and 30" high located at the service side of equipment. CMC 304.0
4. Equipment shall be supported by substantial bases or hangers to accommodate both vertical and horizontal loads. CMC 303.4

HVAC PROVIDER SHALL PROVIDE THE CUT SHEET WITH VENT AND DUCT CALCULATION, THAT COMPLIANCE WITH MANUAL D PER ENERGY STANDARD, PRIOR TO THE INSTALLATION

LEDGEND

- AC ceiling mounted out put vent per manufacture
- Duct size per manufacture and installer that to compliance with manual D requirements prior to framing inspection
- Air return intake vent with filter (ceiling mounted)

MECHANICAL PLAN

SCALE 1/4" = 1'-0"

WRITTEN DIMENSIONS SHALL HAVE PRECEDENCE OVER SCALE DIMENSIONS. contractors and home owner builders shall verify and be responsible for dimensions and conditions of the project. DR Designs must be notified of any variation from the dimensions, conditions and specifications appearing on this plan.

DR DESIGNS
(530) 559 - 2539

NEW CONSTRUCTION

632 ZION STREET
NEVADA CITY, CA

MECHANICAL

DUSTIN RUCKMAN

REVISIONS
1
2

APN# 005-230-010-000

19-0076 | 12/27/2019

M1

STAPLE HERE

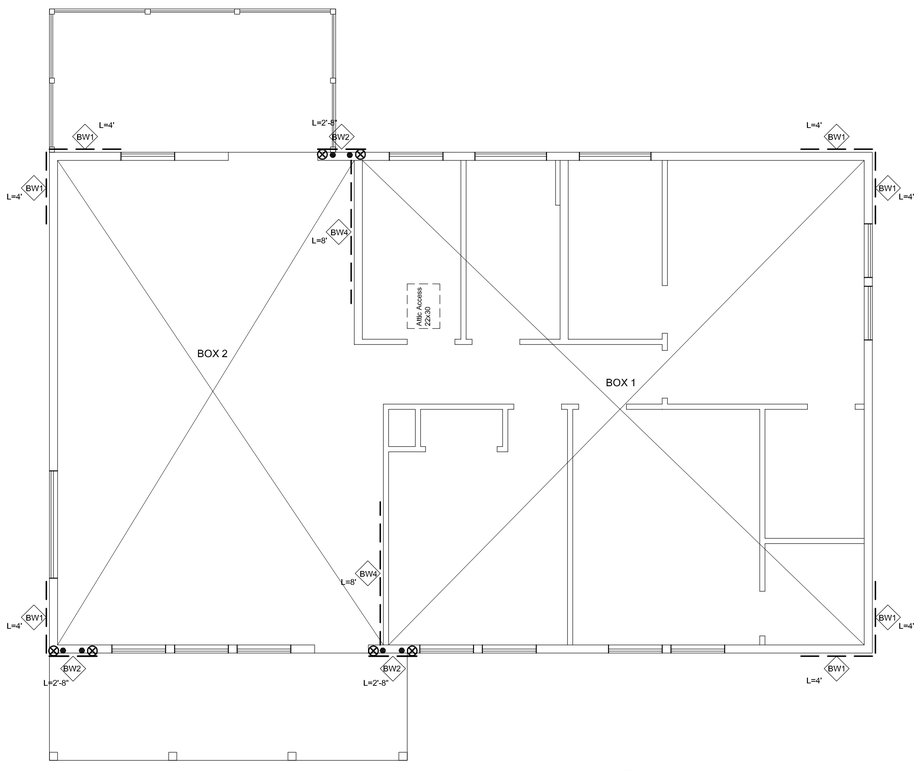

BRACEDWALL PLAN

SCALE 1/4" = 1'-0"

BRACED WALL SCHEDULE PER CHAPER R602

TYPE	SHEATING	BLOCKING	EN	FN	SILL NAILS	SILL BOLTS
BW1	3/8" OSB	YES	8d @ 12" O.C.	8d @ 12" O.C.	16d @ 16" O.C.	4'-0" O.C.
BW2	3/8" OSB SEE R602.10.6.1	YES	8d @ 12" O.C.	8d @ 12" O.C.	16d @ 8" O.C.	2 TOTAL
BW3	3/8" OSB	YES	8d @ 12" O.C.	8d @ 12" O.C.	16d @ 8" O.C.	3 TOTAL
BW4	1/2" GYPSUM BOARD MIN.	YES	NOTE 1 NAILS @ 7" O.C.	NOTE 1 NAILS @ 7" O.C.	16d @ 8" O.C.	3 TOTAL
PFH	SEE FIGURE R602.10.3.3					

NOTES:

- 1/2" GALVINAZED ROOFING NAILS, OR 1-1/4" SCREWS TYPE W OR S @ 7" O.C.
- ALL AB.'S AT SILL SHALL HAVE 3"X3"X5/16" PLATE WASHERS
- ALL BRACED PANELS AT FIRST FLOOR OF 2 STORY SHALL HAVE A MIN. OF 3-5/8" Ø X10" AB.'S

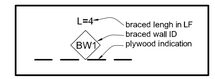

LEGEND

⊗ HDU5 / SSTB20

▬ SIMPSON LSTA30 STRAP FROM BEAM TO OVER DBL. STUDS BEHIND AWB BRACED WALL TYP.

● 5/8" A.B. W/ WASHER & NUT

BRACED WALL DETAILS

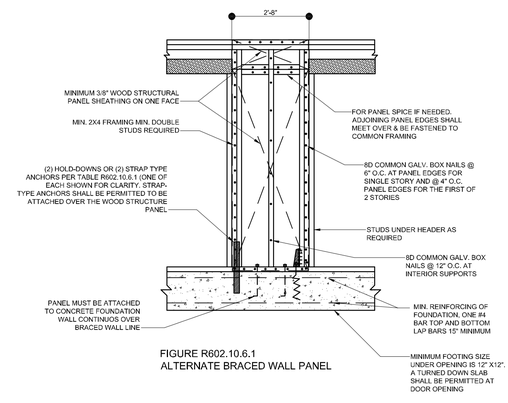

FIGURE R602.10.6.1
ALTERNATE BRACED WALL PANEL

WRITTEN DIMENSIONS SHALL HAVE PRECEDENCE OVER SCALE DIMENSIONS. contractors and home owner builders shall verify and be responsible for dimensions and conditions of the project. DR Designs must be notified of any variation from the dimensions, conditions and specifications appearing on this plan.

DR DESIGNS
(530) 559 - 2539

NEW CONSTRUCTION

632 ZION STREET
NEVADA CITY, CA

BRACED WALL PLAN

DUSTIN RUCKMAN

REVISIONS

1

2

APN# 005-230-010-000

19-0076 | 12/27/2019

SE1

STAPLE HERE

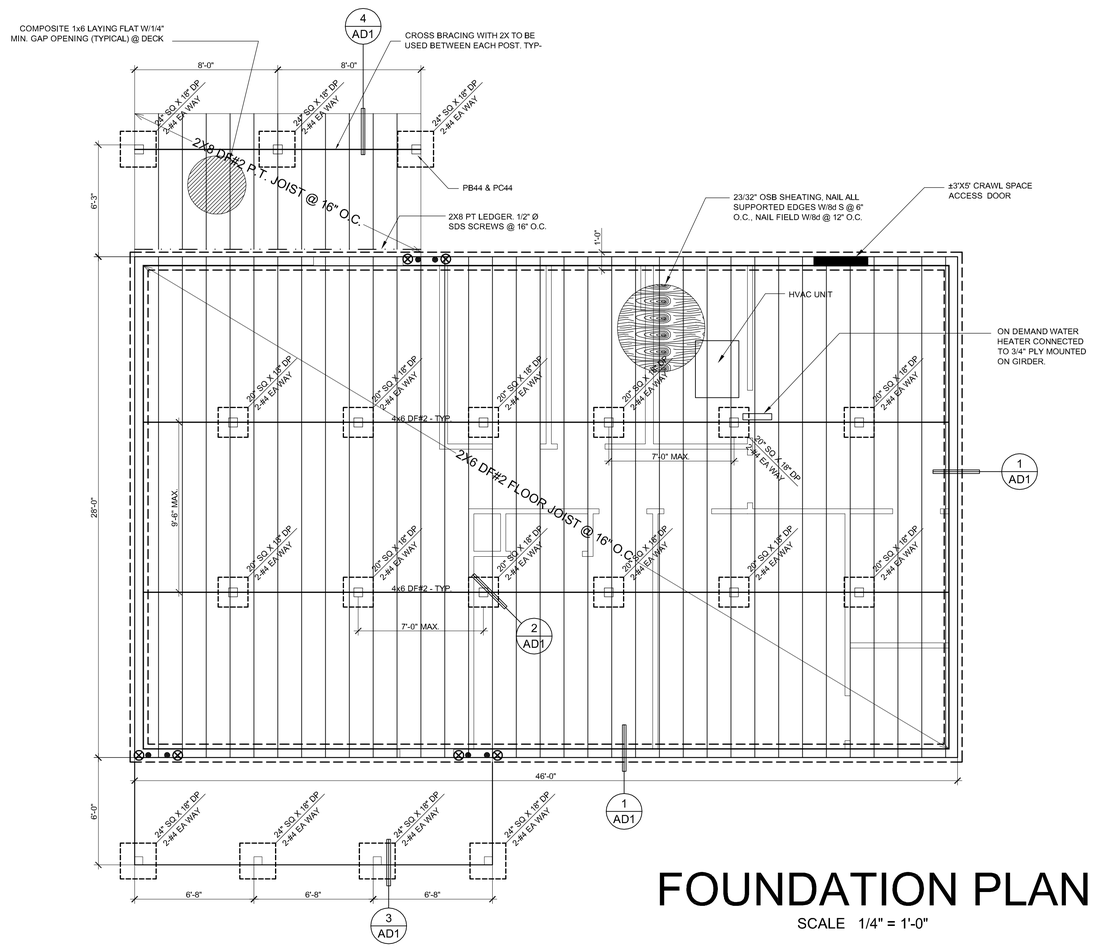

FOUNDATION PLAN

SCALE 1/4" = 1'-0"

BRACED WALL SCHEDULE PER CHAPTER 602

TYPE	SHEATHING	BLOCKING	EN	FN	SILL NAILS	SILL BOLTS
BW1	3/8" OSB	YES	8d @ 6" O.C.	8d @ 12" O.C.	16d @ 16" O.C.	4' - 0" O.C.
BW2	3/8" OSB	YES	8d @ 6" O.C.	8d @ 12" O.C.	16d @ 8" O.C.	2 TOTAL
BW3	3/8" OSB	YES	8d @ 6" O.C.	8d @ 12" O.C.	16d @ 8" O.C.	3 TOTAL
BW4	1/2" GYP	YES	7d COOLER NAILS @ 6" O.C.	7d COOLER NAILS @ 6" O.C.	16d @ 8" O.C.	3 TOTAL
PFH	SEE FIGURE R602.10.3.3					

NOTES:

- ALL BRACED PANELS AT FIRST FLOOR OF 2 STORY SHALL HAVE A MIN. OF 3-5/8" Ø X10" AB.'S
- ALL AB.'S AT SILL SHALL HAVE 3"X3"X5/16" PLATE WASHERS

GENERAL COMMENTS

WOOD TYPE

- JOISTS, GIRDERS, STRUCTURAL BLOCKING, AND SUPPORT POSTS SHALL BE WOOD OF NATURAL RESISTANCE TO DECAY OR PRESSURE TREATED LUMBER WHEN EXPOSED TO THE WEATHER. (CRC R317.1.3).

DRAINAGE

- SLOPE DRAINAGE 6" WITHIN THE FIRST 10FT FROM THE FOUNDATION WALL. IF PHYSICAL OBSTRUCTIONS OR LOT LINES PROHIBIT THE 10FT DISTANCE, A 2-5 PERCENT SLOPE SHALL BE PROVIDED TO AN APPROVED ALTERNATIVE METHOD OF DIVERTING THE WATER AWAY FROM THE FOUNDATION. IMPERVIOUS SURFACES SHALL ALSO BE SLOPED A MINIMUM OF 2 PERCENT FOR 10FT AWAY FROM STRUCTURES TO AN APPROVED DRAINAGE WAY. (CRC R401.3)

DECKS

- EXTERIOR DECK SUPPORT POSTS SHALL BE CROSS-BRACED IN TWO DIRECTIONS FOR LATERAL STABILITY IF OVER 2FT IN HEIGHT ABOVE GRADE. DECK FRAMING SHALL BE ANCHORED OT THE BULDING WITH CONNECTORS NOT SUBJECT TO WITHDRAWL. (CRC R507)

CONCRETE

- FOOTINGS AND SLABS - CONCRETE FOUNDATION WALLS, RETAINING WALLS, BASEMENT WALLS, ETC FOR SEISMIC DESIGN CATEGORY D0,D1, AND D2 SHALL HAVE A COMPRESSIVE STRENGTH OF 2,500 PSI MINIMUM AND REBAR GRADE SHALL BE 60 MINIMUM. (CRC R404.1.3.3.1) NO HIGH STRENGTH CONCRETE SPECIAL INSPECTION IS REQUIRED. A MIX TAG SHALL BE REVIEWED BY THE FIELD INSPECTOR TO CONFIRM REQUIRED CONPRESSIVE STRENGTH OF CONCRETE.

WRITTEN DIMENSIONS SHALL HAVE PRECEDENCE OVER SCALE DIMENSIONS. contractors and home owner builders shall verify and be responsible for dimensions and conditions of the project. DR Designs must be notified of any variation from the dimensions, conditions and specifications appearing on this plan.

DR DESIGNS
(530) 559 - 2539

NEW CONSTRUCTION

632 ZION STREET
NEVADA CITY, CA

FOUNDATION PLAN

DUSTIN RUCKMAN

REVISIONS

1

2

APN# 005-230-010-000

19-0076 | 12/27/2019

SE2

STAPLE HERE

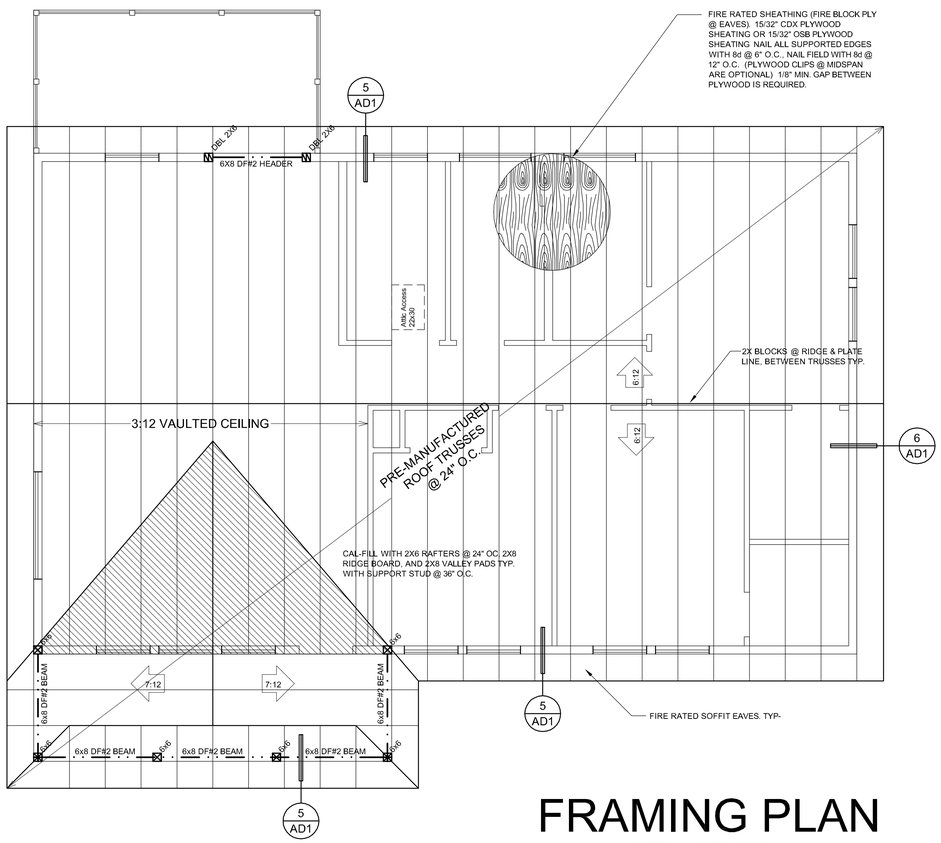

FRAMING PLAN

SCALE 1/4" = 1'-0"

HEADER ABOVE WINDOW, PORCH AND DOOR NOTE

SPAN FROM 0' TO 4' - 6x6
SPAN FROM 4' TO 6' - 6x8
SPAN FROM 6' TO ABOVE - 6x10

* TYPICAL HEADERS FOR ALL DOORS AND WINDOWS OTHERWISE NOTED ON PLAN.

* WINDOW SIDE TRIM WITH DBL STUDS FOR LARGER THAN 6'-0" SPAND OF THE SINGLE STORY AND @ THE 4'-0" SPAND OF THE 2 STORY.

GENERAL DETAILS

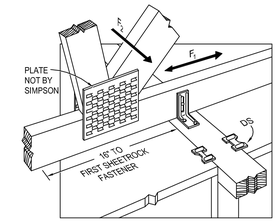

Simpson Strong-Tie
STC

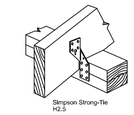

Simpson Strong-Tie
H2.5

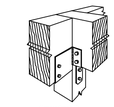

Simpson Strong-Tie
ECCC

NOTES

WOOD TYPE

- JOISTS, GIRDERS, STRUCTURAL BLOCKING, AND SUPPORT POSTS SHALL BE WOOD OF NATURAL RESISTANCE TO DECAY OR PRESSURE TREATED LUMBER WHEN EXPOSED TO THE WEATHER. (CRC R317.1.3).

LEGEND

1
SE2

DETAIL BUBBLE CALL OUT. REFERENCE NOTED PAGES FOR DETAILS.

WRITTEN DIMENSIONS SHALL HAVE PRECEDENCE OVER SCALE DIMENSIONS. contractors and home owner builders shall verify and be responsible for dimensions and conditions of the project. DR Designs must be notified of any variation from the dimensions, conditions and specifications appearing on this plan.

DR DESIGNS
(530) 559 - 2539

NEW CONSTRUCTION

632 ZION STREET
NEVADA CITY, CA

ROOF FRAMING

DUSTIN RUCKMAN

REVISIONS

1
2

APN# 005-230-010-000

19-0076 | 12/27/2019

SE3

STAPLE HERE

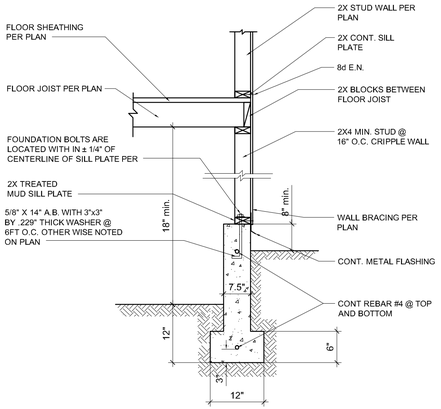

1 TYP. CONT. FOUNDATION

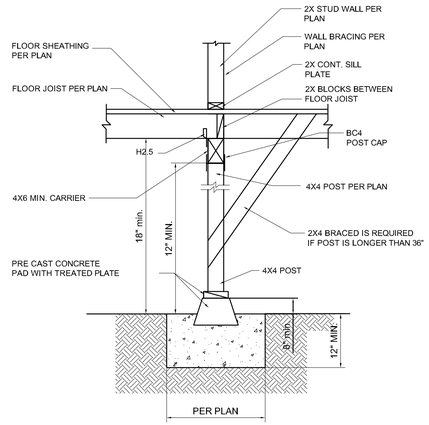

2 INTERIOR SUPPORT PAD

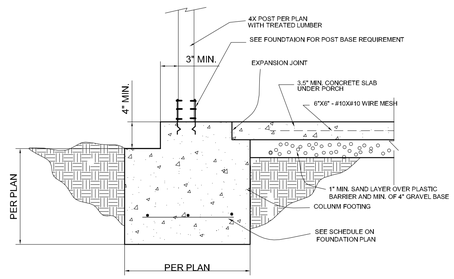

3 COLUMN FOOTING WITH CONT. PORCH SLAB

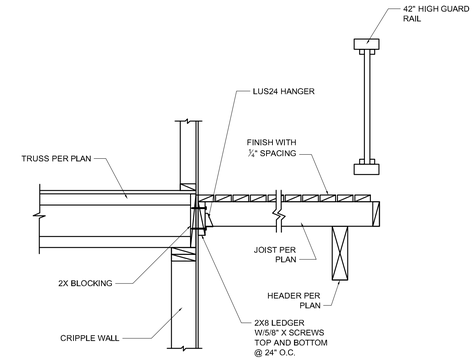

4 DECK SECTION

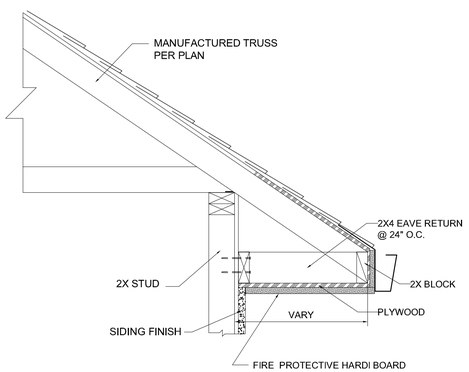

5 OVERHANG - FIRE RATED

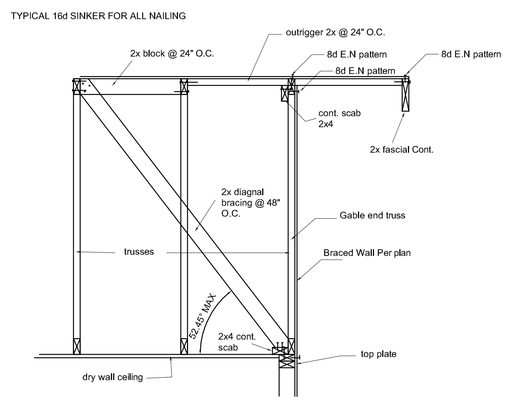

6 GABLE END BRACING TYP.

WRITTEN DIMENSIONS SHALL HAVE PRECEDENCE OVER SCALE DIMENSIONS. contractors and home owner builders shall verify and be responsible for dimensions and conditions of the project. DR Designs must be notified of any variation from the dimensions, conditions and specifications appearing on this plan.

DR DESIGNS
(530) 559 - 2539

NEW CONSTRUCTION

632 ZION STREET
NEVADA CITY, CA

DETAILS

DUSTIN RUCKMAN

REVISIONS

1

2

APN# 005-230-010-000

19-0076 | 12/27/2019

AD1

STAPLE HERE

NO
PARKING
IN
DRIVEWAY

NO
PARKING
IN
DRIVEWAY

NO
PARKING
IN
DRIVEWAY

634

632

HardiePlank® Lap Siding Product Description

HardiePlank® lap siding is factory-primed fiber-cement lap siding available in a variety of styles and textures. Please see your local James Hardie® product dealer for product availability. HardiePlank lap siding comes in 12 ft. lengths. Nominal widths from 5 1/4 in to 12 in. create a range of exposures from 4 in to 10 3/4 in

HardiePlank lap siding is also available with ColorPlus® Technology as one of James Hardie's prefinished products. ColorPlus® Technology is a factory applied, oven-baked finish available on a variety of James Hardie siding and trim products. See your local dealer for details and availability of products, colors, and accessories.

The HZ5® product line is right at home in climates with freezing temperatures, seasonal temperature variations, snow and ice. HZ5® boards are the result of our generational evolution of our time-tested products. We've evolved our substrate composition to be specifically designed to perform in conditions found in these climates. To ensure that its beauty matches its durability, we've engineered the surface for higher performance, giving it superior paint adhesion and moisture resistance. In addition, we've added a drip edge to the HardiePlank® HZ5® lap siding product to provide improved water management in conditions specific to HZ5® climates.

Select Cedarmill©

Smooth

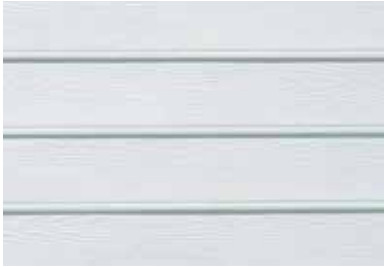

Beaded Cedarmill©

Beaded Smooth

Custom Colonial Roughsawn®

Custom Colonial Smooth®

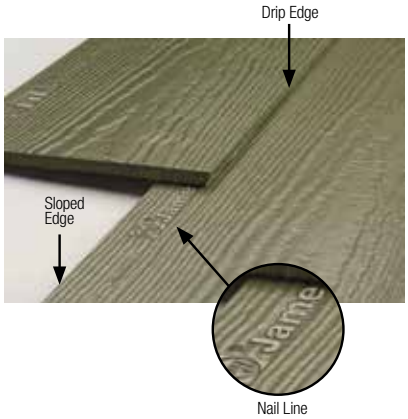

Installation of HardiePlank® Lap Siding

INSTALL A STARTER STRIP

HardiePlank® lap siding requires a starter strip beneath the first course to set it on the proper angle and to create a proper drip edge at the bottom of the siding. Starter strips are easily made by ripping 1¼ in. pieces of HardiePlank siding from full or partial planks.

The bottom of the starter strip should be installed even with the bottom of the mudsill or the bottom edge of the sheathing. The strip must be installed over the water-resistive barrier, but occasional gaps should be left in the starter strip to allow any accumulated moisture behind the siding to drain away safely.

10.1

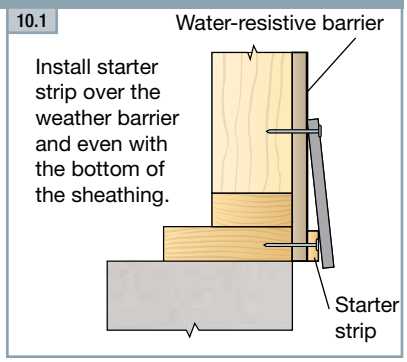

OVERVIEW OF HARDIEPLANK LAP SIDING

TIP: For accurate fastening, snap vertical chalk lines on the water-resistive barrier at the center of every stud location.

10.2

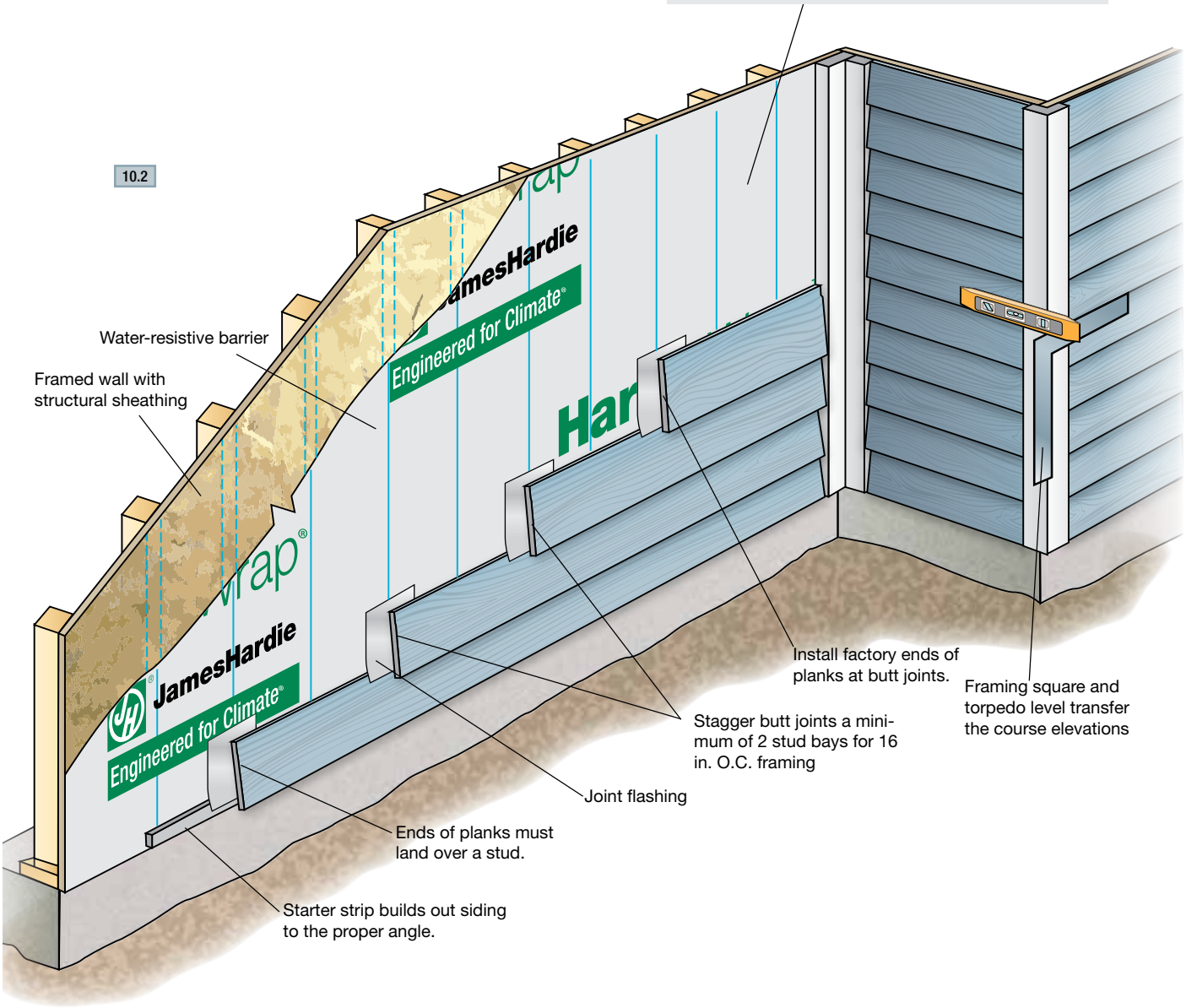

INSTALLING THE PLANKS

10.3

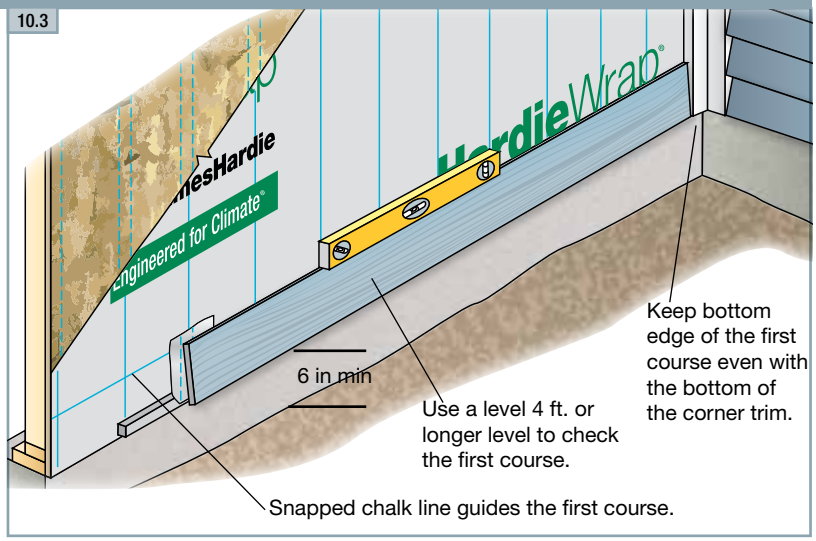

The first course of HardiePlank® siding is critical to the proper installation of the plank on the rest of the building. The first course should start at the lowest point of the house and within required clearances. Special attention should be made to ensure that it's straight and level. Attention should also be paid to staggering any butt joints in the planks so that the installation is attractive while making efficient use of material.

1. Use a level (4 ft. or longer) or chalked level line to be sure that the first course is level. As installation proceeds up the wall, periodically check the level and straightness of the courses. When correcting for flatness over products such as exterior insulation, use drywall shims. It is good practice to snap a chalk line every 3 to 5 courses to keep the planks straight and level.
2. Position the bottom edge of the first course of siding a minimum ¼ in below the edge of the starter strip (maintain required clearances) and secure.
3. Run the siding to the HardieTrim® board leaving a 1/8 in. gap between the siding and trim.

The bottom of the siding should be kept even with the bottom of the trim, or if desired, the trim may extend below the bottom of the siding. But the siding should never hang below the trim. ***When installing the first course make sure ground clearances are in accordance with James Hardie requirements and those of local codes.**

PLANK ALIGNMENT AT CORNERS

For the best looking installation, make sure that the heights of the plank courses match on both sides of a corner. Use a framing square, speed square or a level to match up the plank heights. Check every few courses to make sure proper heights are being maintained.

10.4

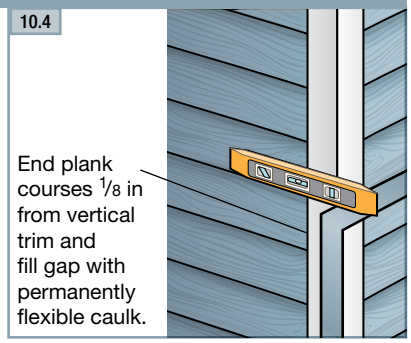

HANDLING

IMPORTANT: To prevent damage to the drip edge, extra care should be taken when removing planks from the pallet, while handling, and when installing with a lap gauge. Planks are interlocked together on the pallet, therefore they should be removed from the pallet horizontally (side to side) to allow planks to unlock themselves from one another.

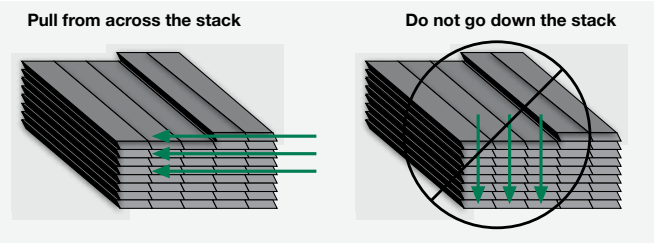

TIP: When taking planks from the pallet installation, avoid repeating the texture pattern by working across the pallet. Two to four planks can be removed from a stack at one time. But then material should be taken from adjacent stacks, again working across the pallet. Texture repeat is typically a concern on large walls with few breaks such as windows or doors.

Installation of HardiePlank® Lap Siding (cont.)

BLIND NAILING (nailing through top of plank)

Blind nailing is recommended for installing any type of HardiePlank® lap siding including ColorPlus® siding. With blind nailing, each course covers the fasteners on the course below, which provides a better looking installation.

For blind nailing HardiePlank lap siding, James Hardie recommends driving fasteners 1 in. from the top edge of the plank. Additionally fasteners should be placed no closer than 3/8 in from the ends of the plank.

10.5 **Blind nailing measurments**

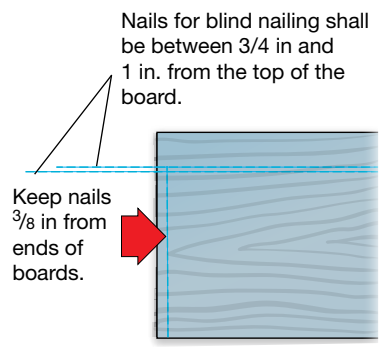

10.6 **Blind nailing**

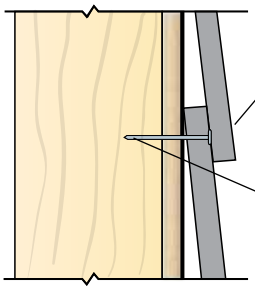

HardiePlank® HZ5® Lap Siding is manufactured with a nail line that should be used as a guide for proper nail placement when blind nailing. This nail line should not be used as a lap line.

Avoid placing fasteners near the top edge of the plank. This practice, called “high nailing”, may lead to loose planks, unwanted gaps or rattling. **Pin-backed corners may be done for aesthetic purposes only. Finish nails are recommended for pin-backs. Headed siding nails are allowed. Place pin-backs no closer than 1in. from plank ends & 3/4in. from plank edge into min. 3/8in. wood structural panel. Pin-backs are not a substitute for blind or face nailing**

FACE NAILING (nailing through the overlap at the bottom of the plank)

Although blind nailing is recommended by James Hardie, face nailing may be required for certain. installations including: installations in high wind areas, fastening into OSB or equivalent sheathing without penetrating a stud, or when dictated by specific building codes. Refer to Appendix D for related code matters.

10.7 **Face nailing**

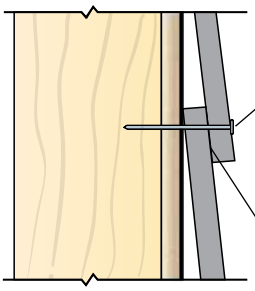

STAGGERING THE BUTT JOINTS

For walls longer than 12 ft, it is necessary to butt joint additional lengths of HardiePlank siding. These butt joints should be staggered to avoid noticeable patterns, which is determined by the placement of the first course. Butt joints between consecutive courses should be spaced apart by at least two stud bays for 16 in, o.c. framing or one bay for 24 in. o.c. framing.

While random placement of the planks is usually the most aesthetically pleasing, a progressive stagger pattern can make the job easier and faster without the pattern becoming too noticeable. With this strategy, the cut off piece for one course becomes the starter piece for a course above, making efficient use of materials and ensuring that all butt joints land on studs. The pattern can be modified for different stud placement.

10.8

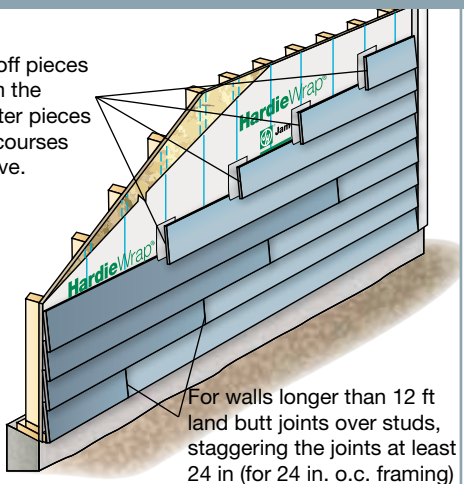

JOINT FLASHING

One or more of the following joint treatment options are required by code (as referenced 2009 IRC R703.10.2)

A. Joint Flashing (James Hardie recommended)

B. Caulking* (Caulking is not recommended for ColorPlus for aesthetic reasons as the Caulking and ColorPlus will weather differently. For the same reason, do not caulk nail heads on ColorPlus products.}

C. “H” jointer cover

Flashing behind butt joints provides an extra level of protection against the entry of water at the joint. James Hardie recommends 6 in. wide flashing that overlaps the course below by 1 in. Some local building codes may require different size flashing.

Joint-flashing material must be durable, waterproof materials that do not react with cement products. Examples of suitable material include finished coil stock and code compliant water-resistive barriers. Other products may also be suitable.

TIP: Joint flashing can be quickly and easily made by cutting a 6 in. wide section off a roll of housewrap. Tape the roll tightly at the cut mark and cut the section off using a miter saw with a carbide blade. Individual sheets then can be cut to length with a utility knife.

TIP: Use light-colored joint flashing when using light-colored ColorPlus lap siding or other siding with a light-colored finish. Dark-color joint flashings should be used on siding with dark finishes.

10.9

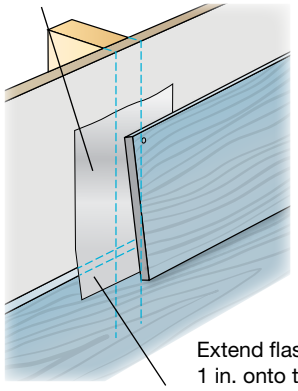

10.10

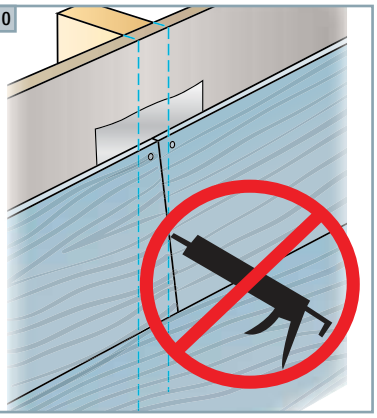

Caulking at HardiePlank lap siding butt joints is not recommended for ColorPlus for aesthetic reasons as the caulking and ColorPlus will weather differently. For the same reason, do not caulk exposed nail heads. Refer to the ColorPlus touch-up section for details

JOINT PLACEMENT AND TREATMENT

Butt joints in HardiePlank lap siding should always land on a stud. Butt joints between studs are not recommended and should be avoided. Whenever possible, factory-finished ends should be used at butt joints.

Place cut ends where the siding meets a corner, door, window trim, or other break in the wall where the joint is to be caulked. If cut ends are used in a butt joint between planks, James Hardie requires sealing cut ends for all products. For ColorPlus products, use the color-matched edge coater to seal the cut end.

10.11

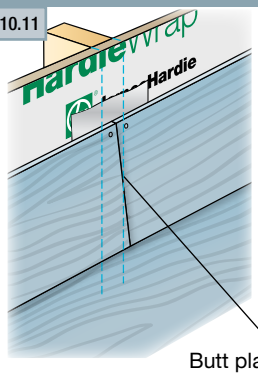

COLORPLUS® TIP: When installing HardiePlank lap siding with ColorPlus Technology, position the plank in the immediate area where the plank is to be fastened. Do not place the plank on the course below and slide into position. Doing so may scuff or scratch the ColorPlus finish on the installed piece.

Installation of HardiePlank® Lap Siding (cont.)

CONTINUING THE INSTALLATION

Once the initial course of HardiePlank® siding is fastened to the wall, continue installing successive courses with full 12 ft. pieces (follow the stagger pattern for longer walls), or until a window, door or other opening interrupts the course (fig 10.12). Notch planks as needed to fit around windows and doors. Again, be sure to seal all cut edges. Avoid placing butt joints directly above or below windows or above doors. Separate the joint from the opening by at least one course of siding.

Where butt joints land on a stud, make sure there is enough stud space for plank on both sides of the joint to land properly. Optimally both sides of a butt joint should land in the middle of a stud with 3/4 in landing space for each side. The minimum stud space for a plank to land is 3/8 in

Pay special attention to window, doors, and corners that have been trimmed before the siding goes on. Vertical trim boards may cover the king studs beside windows or doors, or they may cover up corner studs leaving no room for nailing the siding. In these places add extra studs as needed.

10.12 **Planking around windows**

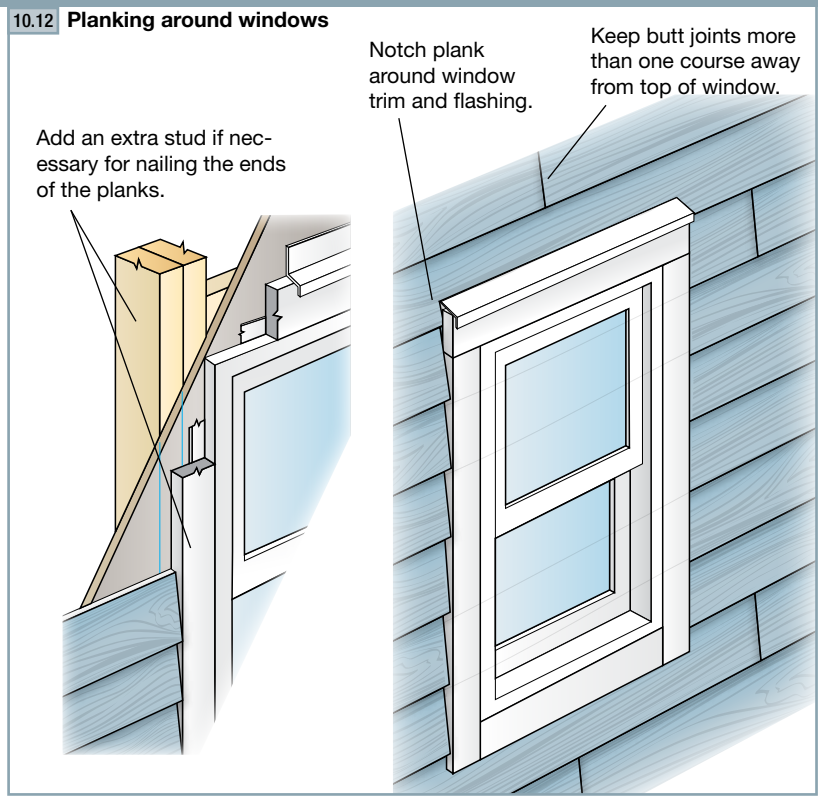

COLORPLUS TIP: HardiePlank lap siding with ColorPlus Technology is shipped with a protective laminate slip sheet, which should be left in place during cutting and fastening to reduce marring and scratching. The sheet should be removed immediately after each plank is installed.

If corners are trimmed with HardieTrim® 5/4, 4/4 boards, it may be necessary to measure and cut the first pieces of siding to make sure the butt joints land on studs.

INSTALLING HARDIEPLANK® SIDING ON GABLE WALLS

Siding gable walls can be challenging, and some of the keys to siding gable walls efficiently are determining the angle or pitch of the roof, properly staging materials, and ensuring that the plank lengths are measured accurately.

To estimate the amount of siding needed to complete a gable end, use the estimating tools located in Appendix C.

Stage enough material on the pump jacks or scaffolding to complete the gable end, but take care not to overload the staging. When possible, a cut table should be located on the pump jacks or scaffolding, which frees up crew members to work on other walls.

To cut planks for the gable:

1. Tack up a small scrap piece of siding where the first gable course is going.
2. Hold a second small piece of siding against the eave or rake board.
3. Trace the angle onto the scrap.
4. Cut that line and label the scrap as the template for the gable angle. The template can then be used to transfer the angle onto the larger pieces for cutting and installation.
5. Periodically check the angle as you progress up the wall.

The quickest way to measure and cut consecutive courses of siding for a gable is to work off the previous piece.

1. Cut and fit the lowest course of siding.
2. Before installing, lay it flat and measure down 1¼ in. from the top edge of the plank for the course overlap. Make a mark on both ends.
3. Set a piece of uncut siding on top of the first piece, aligning the bottom edge with the overlap marks. Transfer the length directly to the uncut piece.
4. Draw the gable angle with the template, cut the angle and then repeat the process for the next course.

TIP: Stainless steel fasteners are recommended when installing James Hardie® products.

10.13

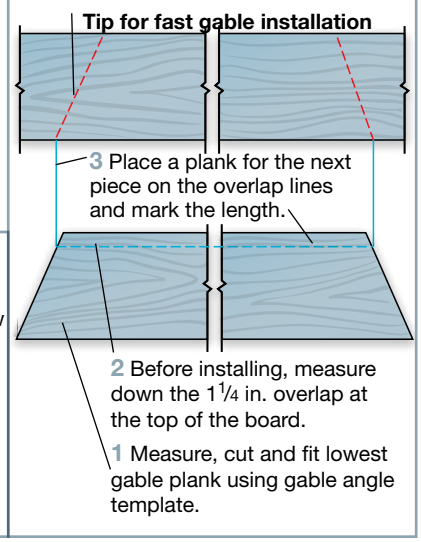

10.14 **Angle Template**

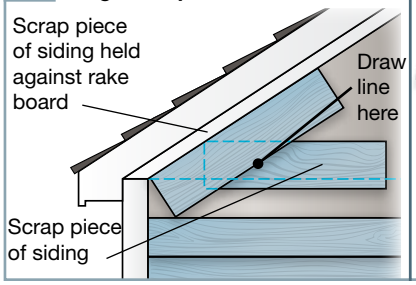

HARDIEPLANK® SIDING FASTENER SPECIFICATIONS

The Fastener Specifications table shows fastener options for a variety of different nailing substrates. Please refer to the applicable ESR report online (see back page) to determine which fastener meets your wind load design criteria.

Fastener Substrate			Approved Fastener
wood studs	blind nail	16 in o.c.	3 9
		24 in o.c.	16
	face nail	16 in o.c.	2 5
		24 in o.c.	2 5
steel studs*	blind nail	16 in o.c.	8 13
		24 in o.c.	
	face nail	16 in o.c.	7 12
		24 in o.c.	
Direct to Masonry			14
7/16 in OSB or equivalent (face nailed)			4

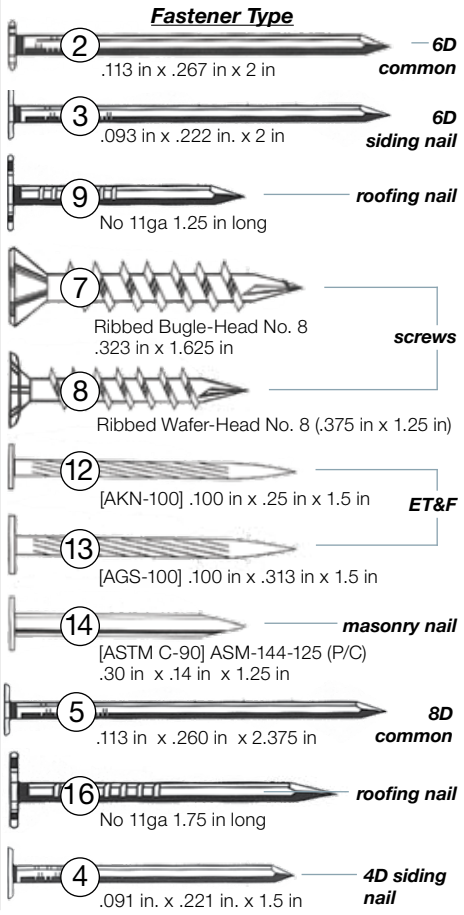

**When blind fastening 9.5 in or wider product onto steel studs, use screws.*

● *indicates recommended fasteners*

HardiePlank® Lap Siding

EFFECTIVE SEPTEMBER 2019

IMPORTANT: FAILURE TO FOLLOW JAMES HARDIE WRITTEN INSTALLATION INSTRUCTIONS AND COMPLY WITH APPLICABLE BUILDING CODES MAY VIOLATE LOCAL LAWS, AFFECT BUILDING ENVELOPE PERFORMANCE AND MAY AFFECT WARRANTY COVERAGE. FAILURE TO COMPLY WITH ALL HEALTH AND SAFETY REGULATIONS WHEN CUTTING AND INSTALLING THIS PRODUCT MAY RESULT IN PERSONAL INJURY. BEFORE INSTALLATION, CONFIRM YOU ARE USING THE CORRECT HARDIEZONE® PRODUCT INSTRUCTIONS BY VISITING HARDIEZONE.COM OR CALL 1-866-942-7343 (866-9-HARDIE)

STORAGE & HANDLING:

Store flat and keep dry and covered prior to installation. Installing siding wet or saturated may result in shrinkage at butt joints. Carry planks on edge. Protect edges and corners from breakage. James Hardie is not responsible for damage caused by improper storage and handling of the product.

⚠ CUTTING INSTRUCTIONS

OUTDOORS

1. Position cutting station so that airflow blows dust away from the user and others near the cutting area.
2. Cut using one of the following methods:
   - a. Best: Circular saw equipped with a HardieBlade® saw blade and attached vacuum dust collection system. Shears (manual, pneumatic or electric) may also be used, not recommended for products thicker than 7/16 in.
   - b. Better: Circular saw equipped with a dust collection feature (e.g. Roan® saw) and a HardieBlade saw blade.
   - c. Good: Circular saw equipped with a HardieBlade saw blade.

INDOORS

DO NOT grind or cut with a power saw indoors. Cut using shears (manual, pneumatic or electric) or the score and snap method, not recommended for products thicker than 7/16 in.

- DO NOT dry sweep dust; use wet dust suppression or vacuum to collect dust.
- For maximum dust reduction, James Hardie recommends using the "Best" cutting practices. Always follow the equipment manufacturer's instructions for proper operation.
- For best performance when cutting with a circular saw, James Hardie recommends using HardieBlade® saw blades.
- Go to jameshardiepros.com for additional cutting and dust control recommendations.

IMPORTANT: The Occupational Safety and Health Administration (OSHA) regulates workplace exposure to silica dust. For construction sites, OSHA has deemed that cutting fiber cement with a circular saw having a blade diameter less than 8 inches and connected to a commercially available dust collection system per manufacturer's instructions results in exposures below the OSHA Permissible Exposure Limit (PEL) for respirable crystalline silica, without the need for additional respiratory protection.

If you are unsure about how to comply with OSHA silica dust regulations, consult a qualified industrial hygienist or safety professional, or contact your James Hardie technical sales representative for assistance. James Hardie makes no representation or warranty that adopting a particular cutting practice will assure your compliance with OSHA rules or other applicable laws and safety requirements.

IMPORTANT: To prevent damage to the drip edge, extra care should be taken when removing planks from the pallet, while handling, and when installing with a lap gauge. Please see additional handling requirements on page 4.

GENERAL REQUIREMENTS:

- HardiePlank® lap siding can be installed over braced wood or steel studs, 20 gauge (33 mils) minimum to 16 gauge (54 mils) maximum, spaced a maximum of 24 in o.c. or directly to minimum 7/16 in thick OSB sheathing. See General Fastening Requirements. Irregularities in framing and sheathing can mirror through the finished application. Correct irregularities before installing siding.
- Information on installing James Hardie products over non-nailable substrates (ex: gypsum, foam,etc.) can be located in JH Tech Bulletin 19 at www.jamehardie.com
- A water-resistive barrier is required in accordance with local building code requirements. The water-resistive barrier must be appropriately installed with penetration and junction flashing in accordance with local building code requirements. James Hardie will assume no responsibility for water infiltration. James Hardie does manufacture HardieWrap® Weather Barrier, a non-woven non-perforated housewrap[1], which complies with building code requirements.
- Adjacent finished grade must slope away from the building in accordance with local building codes - typically a minimum of 6 in. in the first 10 ft..
- Do not use HardiePlank lap siding in Fascia or Trim applications.
- Do not install James Hardie products, such that they may remain in contact with standing water.
- HardiePlank lap siding may be installed on flat vertical wall applications only.
- For larger projects, including commercial and multi-family projects, where the span of the wall is significant in length, the designer and/or architect should take into consideration the coefficient of thermal expansion and moisture movement of the product in their design. These values can be found in the Technical Bulletin "Expansion Characteristics of James Hardie® Siding Products" at www.jameshardie.com.
- James Hardie Building Products provides installation /wind load information for buildings with a maximum mean roof height of 85 feet. For information on installations above 60 feet, please contact JH technical support.

Figure 1

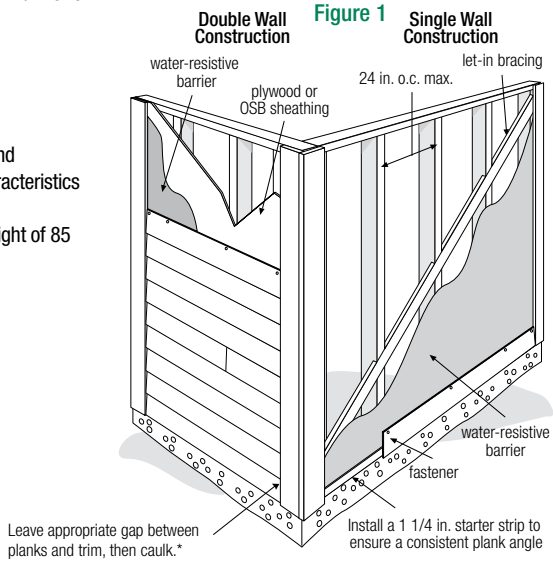

INSTALLATION: JOINT TREATMENT

One or more of the following joint treatment options are required by code *(as referenced 2009 IRC R703.10.2)*

A. Joint Flashing (James Hardie recommended)

B. Caulking* (Caulking is not recommended for ColorPlus for aesthetic reasons as the Caulking and ColorPlus will weather differently. For the same reason, do not caulk nail heads on ColorPlus products.)

C. "H" jointer cover

Figure 2

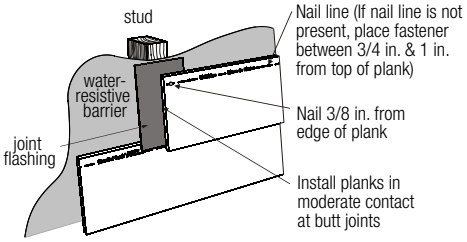

Note: Field painting over caulking may produce a sheen difference when compared to the field painted PrimePlus. *Refer to Caulking section in these instructions.
[1]For additional information on HardieWrap® Weather Barrier, consult James Hardie at 1-866-4Hardie or www.hardiewrap.com

JamesHardie™

CLEARANCE AND FLASHING REQUIREMENTS

Figure 3
Roof to Wall

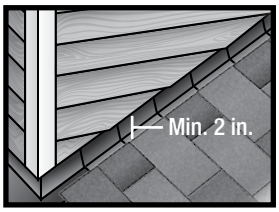

Figure 4
Horizontal Flashing

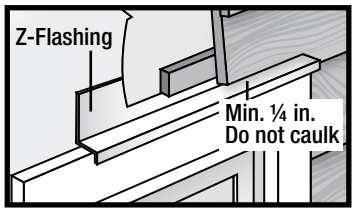

Figure 5
Kickout Flashing

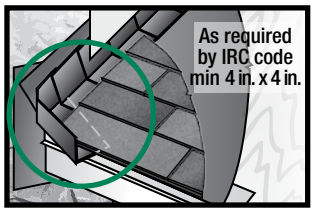

Figure 6
Slabs, Path, Steps to Siding

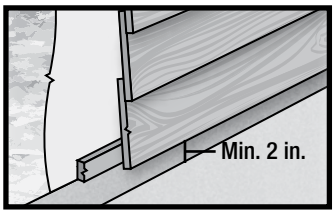

Figure 7
Deck to Wall

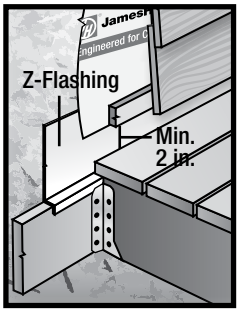

Figure 8
Ground to Siding

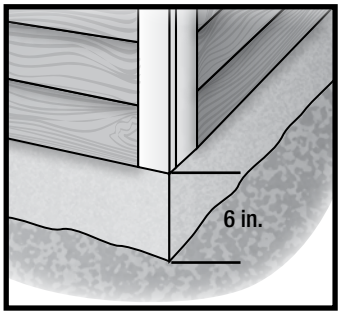

Figure 9
Gutter to Siding

Figure 10
Sheltered Areas

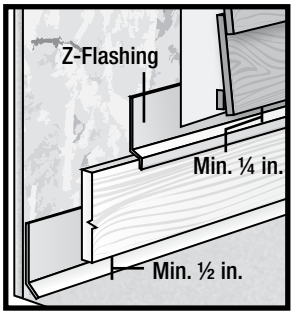

Figure 11
Mortar/Masonry

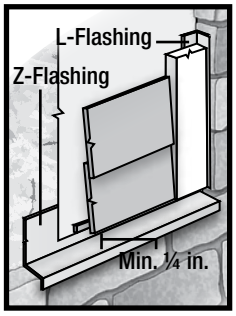

Figure 12
Drip Edge

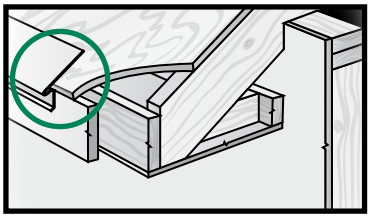

Figure 13
Block Penetration

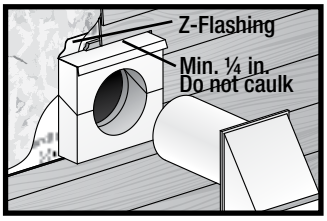

Figure 14
Valley/Shingle Extension

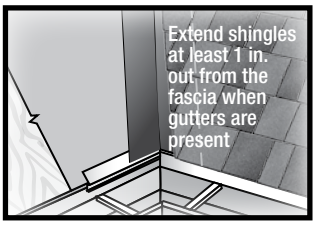

FASTENER REQUIREMENTS*

Refer to the applicable ESR report online to determine which fastener meets your wind load design criteria.

Blind Nailing is the preferred method of installation for HardiePlank® lap siding products. Face nailing should only be used where required by code for high wind areas and must not be used in conjunction with Blind nailing (Please see JH Tech bulletin 17 for exemption when doing a repair).

BLIND NAILING

Nails - Wood Framing
- Siding nail (0.09 in. shank x 0.221 in. HD x 2 in. long)
- 11ga. roofing nail (0.121 in. shank x 0.371 in. HD x 1.25 in. long)

Screws - Steel Framing
- Ribbed Wafer-head or equivalent (No. 8 x 1 1/4 in. long x 0.375 in. HD) Screws must penetrate 3 threads into metal framing.

Nails - Steel Framing
- ET & F Panelfast® nails or equivalent (0.10 in. shank x 0.313 in. HD x 1-1/2 in. long) Nails must penetrate minimum 1/4 in. into metal framing.

OSB minimum 7/16 in.
- Siding nail (0.09 in. shank x 0.215 in. HD x 1-1/2 in. long
- Ribbed Wafer-head or equivalent (No. 8 x 1 5/8 in. long x 0.375 in. HD).

FACE NAILING

Nails - Wood Framing
- 6d (0.113 in. shank x 0.267 in. HD x 2 in. long)
- Siding nail (0.09" shank x 0.221" HD x 2" long)

Screws - Steel Framing
- Ribbed Bugle-head or equivalent (No. 8-18 x 1-5/8 in. long x 0.323 in. HD) Screws must penetrate 3 threads into metal framing.

Nails - Steel Framing
- ET & F pin or equivalent (0.10 in. shank x 0.25 in. HD x 1-1/2 in. long) Nails must penetrate minimum 1/4 in. into metal framing.

OSB minimum 7/16 in.
- Siding nail (0.09 in. shank x 0.221 in. HD x 1-1/2 in. long)

*Also see General Fastening Requirements; and when considering alternative fastening options refer to James Hardie's Technical Bulletin USTB 5 - Fastening Tips for HardiePlank Lap Siding.

FASTENER REQUIREMENTS *continued*

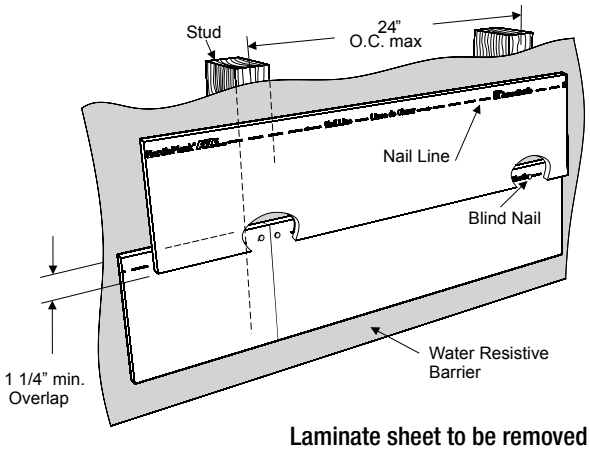

Figure 14

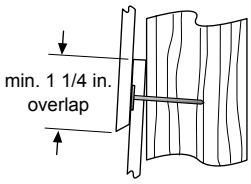

Figure 15

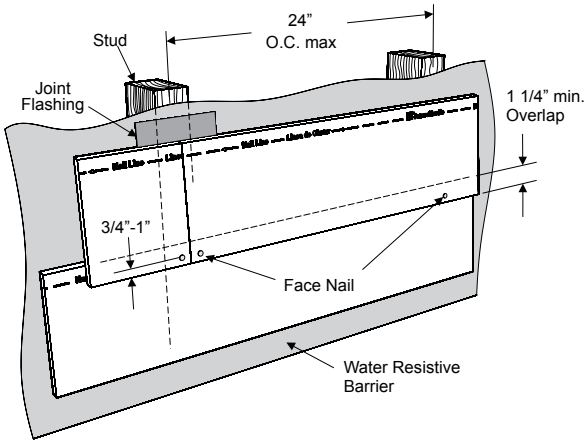

Laminate sheet to be removed immediately after installation of each course for ColorPlus® products.

Pin-backed corners may be done for aesthetic purposes only. Finish nails are recommended for pin-backs. Headed siding nails are allowed. Place pin-backs no closer than 1 in. from plank ends and 3/4 in. from plank edge into min. 3/8 in. wood structural panel. Pin-backs are not a substitute for blind or face nailing.

GENERAL FASTENING REQUIREMENTS

Fasteners must be corrosion resistant, galvanized, or stainless steel. Electro-galvanized are acceptable but may exhibit premature corrosion. James Hardie recommends the use of quality, hot-dipped galvanized nails. James Hardie is not responsible for the corrosion resistance of fasteners. Stainless steel fasteners are recommended when installing James Hardie® products near the ocean, large bodies of water, or in very humid climates.

Manufacturers of ACQ and CA preservative-treated wood recommend spacer materials or other physical barriers to prevent direct contact of ACQ or CA preservative-treated wood and aluminum products. Fasteners used to attach HardieTrim Tabs to preservative-treated wood shall be of hot dipped zinc-coated galvanized steel or stainless steel and in accordance to 2009 IRC R317.3 or 2009 IBC 2304.9.5

- Consult applicable product evaluation or listing for correct fasteners type and placement to achieve specified design wind loads.
- NOTE: Published wind loads may not be applicable to all areas where Local Building Codes have specific jurisdiction. Consult James Hardie Technical Services if you are unsure of applicable compliance documentation.
- Drive fasteners perpendicular to siding and framing.
- Fastener heads should fit snug against siding (no air space).
- NOTE: Whenever a structural member is present, HardiePlank should be fastened with even spacing to the structural member. The tables allowing direct to OSB or plywood should only be used when traditional framing is not available.

CUT EDGE TREATMENT

Caulk, paint or prime all field cut edges. James Hardie touch-up kits are required to touch-up ColorPlus products.

CAULKING

For best results use an Elastomeric Joint Sealant complying with ASTM C920 Grade NS, Class 25 or higher or a Latex Joint Sealant complying with ASTM C834. Caulking/Sealant must be applied in accordance with the caulking/sealant manufacturer's written instructions.
Note: some caulking manufacturers do not allow "tooling".

PNEUMATIC FASTENING

James Hardie products can be hand nailed or fastened with a pneumatic tool. Pneumatic fastening is highly recommended. Set air pressure so that the fastener is driven snug with the surface of the siding. A flush mount attachment on the pneumatic tool is recommended. This will help control the depth the nail is driven. If setting the nail depth proves difficult, choose a setting that under drives the nail. (Drive under driven nails snug with a smooth faced hammer - Does not apply for installation to steel framing).

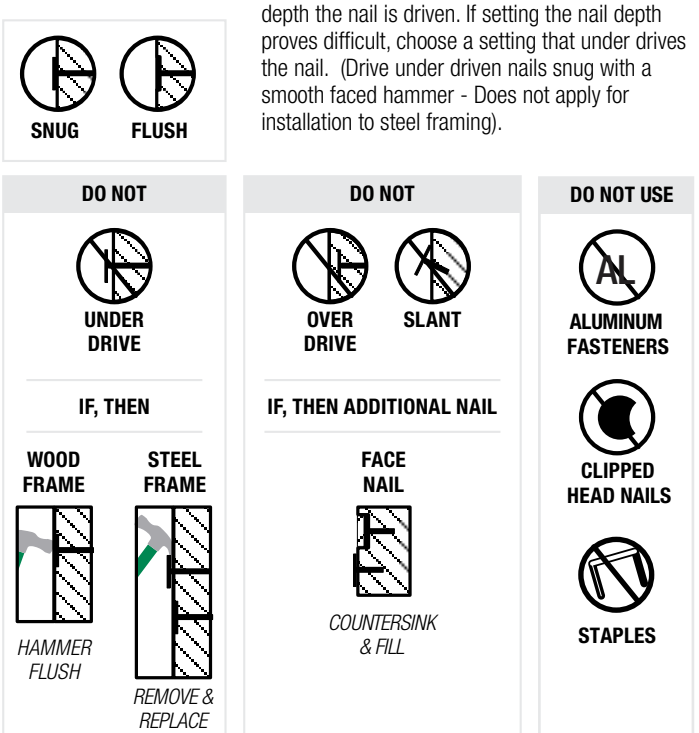

PAINTING

DO NOT use stain, oil/alkyd base paint, or powder coating on James Hardie® products. Factory-primed James Hardie products must be painted within 180 days of installation. 100% acrylic topcoats are recommended. Do not paint when wet. For application rates refer to paint manufacturers specifications. Back-rolling is recommended if the siding is sprayed.

COLORPLUS® TECHNOLOGY CAULKING, TOUCH-UP & LAMINATE

- Care should be taken when handling and cutting James Hardie ColorPlus® products. During installation use a wet soft cloth or soft brush to gently wipe off any residue or construction dust left on the product, then rinse with a garden hose.
- Touch up nicks, scrapes and nail heads using the ColorPlus® Technology touch-up applicator. Touch-up should be used sparingly. If large areas require touch-up, replace the damaged area with new HardiePlank® lap siding with ColorPlus® Technology.
- Laminate sheet must be removed immediately after installation of each course.
- Terminate non-factory cut edges into trim where possible, and caulk. Color matched caulks are available from your ColorPlus® product dealer.
- Treat all other non-factory cut edges using the ColorPlus Technology edge coaters, available from your ColorPlus product dealer.

Note: James Hardie does not warrant the usage of third party touch-up or paints used as touch-up on James Hardie ColorPlus products.

Problems with appearance or performance arising from use of third party touch-up paints or paints used as touch-up that are not James Hardie touch-up will not be covered under the James Hardie ColorPlus Limited Finish Warranty.

COVERAGE CHART/ESTIMATING GUIDE

Number of 12 ft. planks, does not include waste

COVERAGE AREA LESS OPENINGS	HARDIEPLANK® LAP SIDING WIDTH									
SQ (1 SQ = 100 sq.ft.)	(exposure)	5 1/4 4	6 1/4 5	7 1/4 6	7 1/2 6 1/4	8 6 3/4	8 1/4 7	9 1/4 8	9 1/2 8 1/4	12 10 3/4
1		25	20	17	16	15	14	13	13	9
2		50	40	33	32	30	29	25	25	19
3		75	60	50	48	44	43	38	38	28
4		100	80	67	64	59	57	50	50	37
5		125	100	83	80	74	71	63	63	47
6		150	120	100	96	89	86	75	75	56
7		175	140	117	112	104	100	88	88	65
8		200	160	133	128	119	114	100	100	74
9		225	180	150	144	133	129	113	113	84
10		250	200	167	160	148	143	125	125	93
11		275	220	183	176	163	157	138	138	102
12		300	240	200	192	178	171	150	150	112
13		325	260	217	208	193	186	163	163	121
14		350	280	233	224	207	200	175	175	130
15		375	300	250	240	222	214	188	188	140
16		400	320	267	256	237	229	200	200	149
17		425	340	283	272	252	243	213	213	158
18		450	360	300	288	267	257	225	225	167
19		475	380	317	304	281	271	238	238	177
20		500	400	333	320	296	286	250	250	186

This coverage chart is meant as a guide. Actual usage is subject to variables such as building design. James Hardie does not assume responsibility for over or under ordering of product.

PAINTING JAMES HARDIE® SIDING AND TRIM PRODUCTS WITH COLORPLUS® TECHNOLOGY

When repainting ColorPlus products, James Hardie recommends the following regarding surface preparation and topcoat application:

- Ensure the surface is clean, dry, and free of any dust, dirt, or mildew
- Repriming is normally not necessary
- 100% acrylic topcoats are recommended
- DO NOT use stain, oil/alkyd base paint, or powder coating on James Hardie® Products.
- Apply finish coat in accordance with paint manufacturers written instructions regarding coverage, application methods, and application temperature
- DO NOT caulk nail heads when using ColorPlus products, refer to the ColorPlus touch-up section

ADDITIONAL HANDLING REQUIREMENTS

IMPORTANT: To prevent damage to the drip edge, extra care should be taken when removing planks from the pallet, while handling, and when installing with a lap gauge. Planks are interlocked together on the pallet, therefore they should be removed from the pallet horizontally (side to side) to allow planks to unlock themselves from one another.

Pull from across the stack

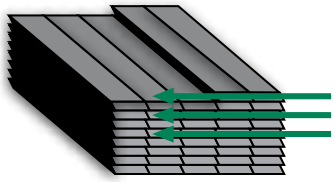

Do not go down the stack

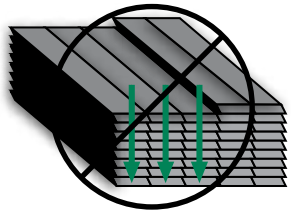

HS11117 P4/4 09/19

SILICA WARNING

DANGER: May cause cancer if dust from product is inhaled. Causes damage to lungs and respiratory system through prolonged or repeated inhalation of dust from product. Refer to the current product Safety Data Sheet before use. The hazard associated with fiber cement arises from crystalline silica present in the dust generated by activities such as cutting, machining, drilling, routing, sawing, crushing, or otherwise abrading fiber cement, and when cleaning up, disposing of or moving the dust. When doing any of these activities in a manner that generates dust you must (1) comply with the OSHA standard for silica dust and/or other applicable law, (2) follow James Hardie cutting instructions to reduce or limit the release of dust; (3) warn others in the area to avoid breathing the dust; (4) when using mechanical saw or high speed cutting tools, work outdoors and use dust collection equipment; and (5) if no other dust controls are available, wear a dust mask or respirator that meets NIOSH requirements (e.g. N-95 dust mask). During clean-up, use a well maintained vacuum and filter appropriate for capturing fine (respirable) dust or use wet clean-up methods - never dry sweep.

WARNING: This product can expose you to chemicals including respirable crystalline silica, which is known to the State of California to cause cancer. For more information go to P65Warnings.ca.gov.

RECOGNITION: In accordance with ICC-ES Evaluation Report ESR-2290, HardiePlank® lap siding is recognized as a suitable alternate to that specified in the 2006, 2009, 2012 & 2015 International Residential Code for One and Two-Family Dwellings, and the 2006, 2009, 2012 & 2015 International Building Code. HardiePlank lap siding is also recognized for application in the following: City of Los Angeles Research Report No. 24862, State of Florida Product Approval FL#13192, Miami-Dade County Florida NOA No. 17-0406.06, U.S. Dept. of HUD Materials Release 1263f, Texas Department of Insurance Product Evaluation EC-23, City of New York MEA 223-93-M, and California DSA PA-019. These documents should also be consulted for additional information concerning the suitability of this product for specific applications.

© 2019 James Hardie Building Products, Inc. All rights reserved TM, SM and ® denote trademarks or registered trademarks of James Hardie Technology Limited.

Style Line® Series

Vinyl Windows

Architectural Manual

Milgard® WINDOWS & DOORS

Instructions on how to use this manual:

This document has been designed for easy navigation and to quickly click to the section you need. Here's some important tips on using this document:

- Any item printed in red, will click through to the corresponding item.
- Click to any item in the Table of Contents on page 3. Click on the Milgard logo at the top of any page to return to the Table of Contents - FULL MANUAL ONLY.
- From each section's Quick Links page, click to any Drawing listed.
- From any Drawing page, click the "Go Back to Quick Links" box on the bottom right of the page to return to the list of drawings.
- Click on the links on the bottom of the page to go to Revit, SketchUp . PDF and .DWG files. Please note that you must have internet access for these links and you will be re-directed to the Milgard site.
- This document can also be navigated from Adobe Acrobat Bookmarks.

Revit, SketchUp, .PDF and .DWG files can be accessed
at **milgard.com** or clicking here:

Technical Resources

© Milgard Manufacturing, Inc.

Contents

COMPONENTS 4
- Frame 4
- Nail-On Fin 4
- Weep System 4
- Glazing Material 4
- Vent Panel 4
- Weatherstripping 5
- Roller Assembly 5
- Locking Assembly 5
- Screen 5
- Energy Packages 5

OPTIONS 5
- Grids 5
- Glass 5

Window Hardware 6

Premium Exterior Vinyl Finishes 7

Full Lifetime Warranty 8

Awning Window 9
- Configurations 10
- Minimum/Maximum Sizes 10
- Available Frame Styles 10
- Drawings - Quick Links 11
- Awning Window 12

Casement Window 22
- Configurations 23
- Minimum/Maximum Sizes 23
- Available Frame Styles 23
- Drawings - Quick Links 24
- Casement Window 25

Horizontal Sliding Window 41
- Configurations 42
- Minimum/Maximum Sizes 42
- Available Frame Styles 42
- Drawings - Quick Links 43
- Horizontal Sliding Window 44
- Double Vent Horizontal Sliding Window 53

Picture and Radius Window 54
- Configurations 55
- Minimum/Maximum Sizes 55
- Available Frame Styles 55
- Drawings - Quick Links 56
- Picture/Radius Window 57

Single Hung Window 67
- Configurations 68
- Minimum/Maximum Sizes 68
- Available Frame Styles 68
- Drawings - Quick Links 69
- Single Hung Window 70

Rev.0718

© Milgard Manufacturing, Inc.

About Style Line® Series

The Style Line series vinyl (PVC) window blends the energy efficiency and low maintenance of vinyl with the clean lines and low profile appearance of an aluminum window.

The result is a window with maximum glass area. Available in white, tan, and clay (select regions), as well as premium painted exteriors. The windows will maintain their color and shape and can be constructed to your exact size specifications, subject to review.

COMPONENTS

Frame

Frame components are made from high performance polyvinyl chloride, available in White or Tan, with Clay available in select regions or premium painted upgrade window frames. The Style Line series is designed to offer a low profile appearance, ideal for contemporary homes or whenever maximum glazing area is desired. Mitered corners are precision welded resulting in an air and water tight seal.

Standard frame depth is 2-7/8", ideal for both new construction and or use as a replacement window.

Nail-On Fin

A 1-1/16" pre-punched nail flange extends around the perimeter frame, securing the window in rough openings and acting as a part of the flashing system. The nailing fin may be removed as needed for particular block frame applications. Fin setbacks are available in 1-3/8" from outside of frame; also in 1" for our SW locations using 3 coat stucco applications (not available at all locations).

Weep System

Hollow sill construction and offset weep holes that release any accumulated moisture from track and help prevent blow back, or water seeping to the interior caused by a combination of wind and rain.

Glazing Material

AAMA approved glazing tape adheres glass to the fixed panel frame which seals and cushions the glass. Rigid vinyl setting blocks are used to support the unit above the sill, preventing glass slippage. Extruded vinyl glazing (snap-in) bead is applied around the exterior edge.

Glass insulating dual glazed panes, 3/4" in overall thickness (1" overall on picture frame), are butyl sealed for energy efficiency. Specialty glass options are available upon request.

Vent Panel

The vent panel has an "L" shaped lip that fully interlocks with the vertical meeting rail, adding security and preventing air and water penetration. Its roller assembly rides on a monorail track for easy operation and durability. This raised track in the frame sill helps keep the vent panel free from interference by foreign particles that may collect in the sill.

© Milgard Manufacturing, Inc.

Weatherstripping

Silicone-treated water-repellent polypropylene fin seal weatherstripping provides a durable, weather tight seal. This weatherstripping is installed in an integral, continuous keyway around three sides of the vent panel and interlock.

Roller Assembly

Self-lubricating, wear resistant, dual nylon rollers provide flexible, free-wheeling, smooth and silent operation. The adjustable rollers are engineered for reduction of friction and elimination of torque on the vent frame.

Locking Assembly

A Positive Action™ lock mechanism provides security and a tighter seal. The lock engages when the window is closed.

Screen

Screen frames are cambered aluminum, reinforced with rigid plastic corner clips. Screens come standard with matching frame color.

The fiberglass charcoal screen mesh is strong, durable and easy to replace. Two plastic pulls located on the screen allow you to install from inside or outside of house.

Energy Packages

Milgard adheres to ENERGY STAR® v6 requirements to meet or exceed U-Factor and Solar Heat Gain Coefficient (SHGC) criteria for all ENERGY STAR® zones.

Milgard also offers high energy performance options for the ultimate in energy efficiency. Energy efficient windows could include one or more of the following features based on your climate.

- SunCoat® or SunCoatMAX®
- EdgeGardMAX®
- Argon or Krypton
- 4th Surface

For more details on Milgard Energy Efficient packages, visit www.milgard.com/learn/energy-efficiency/energy-efficient-components

To check the energy performance of all Milgard windows and doors, use our Energy Calculator at:

milgard.com/energy-calculator

OPTIONS

Grids

Available in 5/8" flat. Color-matched to frame.

1-1/16" sculptured grid available in select markets – check with your Milgard representative.

Glass

Refer to glass section. Many more options are available. Please check with your Milgard Representative.

Caution: The use of petroleum based fuels or solvents as release agents in stucco wall installations or glass cleaning will chemically attack materials used in seals and other components, and voids the Milgard Warranty. The use of wax based release agents is recommended.

Expanding foam for insulation purposes should not be used.

© Milgard Manufacturing, Inc.

Window Hardware

Single Hung and Horizontal Slider

Positive Action™ Lock – Closes and locks window securely in one action.

Casement and Awning

Standard Handle with Sash Lock

© Milgard Manufacturing, Inc.

Premium Exterior Vinyl Finishes

Standard - Matching interior

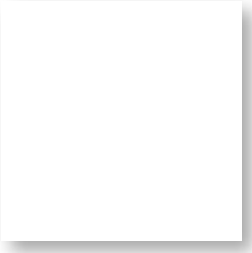
White

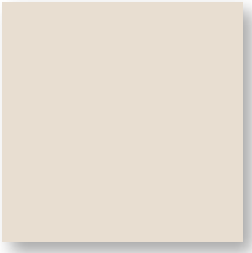
Tan

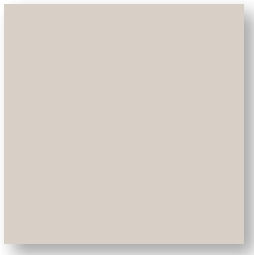
Clay
(available in select regions)

Premium - White interior only

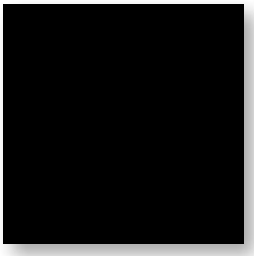
Bronze

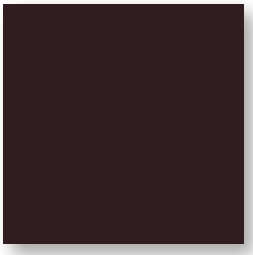
Espresso

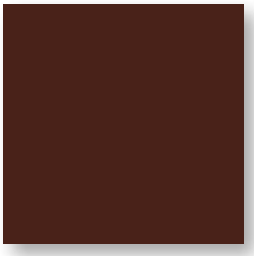
Classic Brown

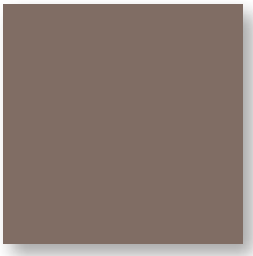
Tweed

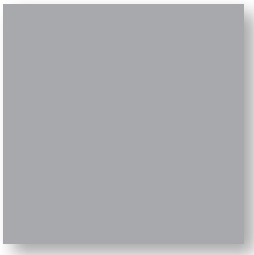
Silver

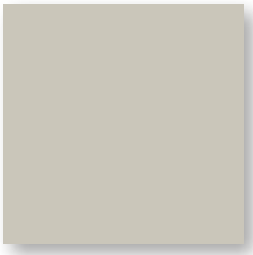
Fog

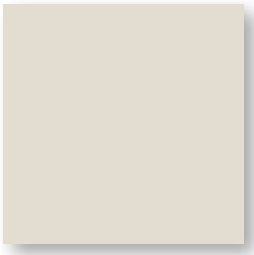
Sand

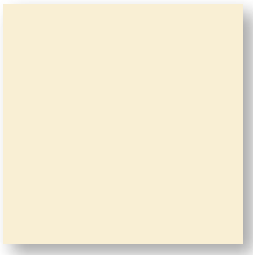
Ivory

© Milgard Manufacturing, Inc.

Full Lifetime Warranty

At Milgard, we build our windows and doors to last. With the dedication to quality that we put into building the best windows in the business, it wouldn't make sense to back them with anything but the best warranty in the business. That's why we back every properly installed window and door for as long as the homeowner owns their home–including parts and labor.

It's why you can be sure you won't find any windows better than Milgard.

For complete warranty details, visit milgard.com.

Why Milgard?

Quality

Milgard offers award-winning windows and patio doors built for long-lasting comfort. For over 50 years, industry experts have consistently recognized Milgard as a trusted brand. By producing our vinyl and fiberglass frame materials in-house, we can more closely monitor for quality control. Milgard windows and patio doors stand up, while standing out.

Experience

Since 1962, Milgard Windows & Doors has designed and assembled superior, top quality windows and patio doors, backed with a Full Lifetime Warranty. Milgard engineers are known for their industry-leading designs using patented technologies. Whatever your project calls for, Milgard has the right product that can beautifully reflect your vision. From new construction to home remodeling, all Milgard windows and doors are custom made to your exact specifications.

Service

We serve the Western U.S. and Canada with a dozen full-service facilities and customer care centers. Our belief is that by being close to our customers, we can provide them better service.

© Milgard Manufacturing, Inc.

Single Hung Window

The Style Line® Series vinyl (PVC) Single Hung window blends the energy efficiency and low maintenance of vinyl with clean lines and a narrow profile.

The result is a window with maximum glass area. Available in white, tan, and clay (select regions), as well as premium painted exteriors. The windows will maintain their color and shape and can be constructed to your exact size specifications.

Please also see:

Components

Options

Hardware

Premium Exterior Vinyl Finishes

Full Lifetime Warranty

© Milgard Manufacturing, Inc.

Single Hung Window

Configurations

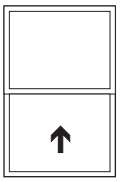

Single Hung

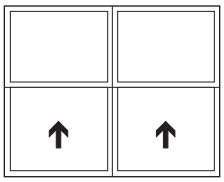

Double Single Hung

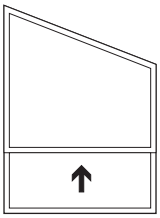

Gable Top Single Hung

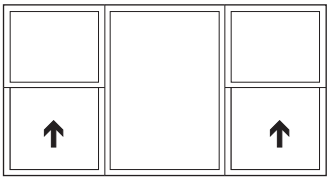

Double Single Hung/Center Lite

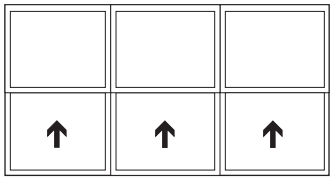

Triple Single Hung

Minimum/Maximum Sizes

Single-Hung
- Min $1^{0}2^{0}$ Max $4^{0}6^{6}$

Double Single-Hung
- Min $2^{0}2^{0}$ Max $7^{0}6^{6}$

Triple Single-Hung
- Min $3^{0}2^{0}$ Max $9^{0}6^{6}$

Double Single-Hung with Center Lite
- Min $3^{0}2^{0}$ Max $9^{0}6^{6}$

Gable Top Single Hung
- Min $1^{0}2^{6}$ Max $4^{0}6^{6}$

Minimum egress is $3^{0}5^{0}$ with a 30″ bar set or $2^{6}6^{0}$ with a 36″ bar set.
SH vent set: 12, 15, 18, 21, 24, 27, 30, 33 or 36.

Available Frame Styles

1-3/8″ Nail Fin Setback
1″ Nail Fin Setback with Stucco Key
1″ Nail Fin Setback with J-Channel
Contour Z-bar
Flat Z-bar
Block Frame (no fin)

NOTE: For engineering approval contact your Milgard representative for any configuration over 40 square feet. Each Milgard Manufacturing plant reserves the right to alter or change sizes and configurations according to location capabilities. Ask your Milgard rep about specialty applications. Windows over 40 square feet shipped open for field glazing. Varies by location.

Not all frame styles available at all Milgard locations.
Contact your Milgard Representative for more information.

© Milgard Manufacturing, Inc.

Drawings - Quick Links

Single Hung Window

70—1-3/8" Fin Setback

71—1-" Fin Setback with Stucco Key

72—1-3/8-" Fin Setback with Stucco Key

73—1" Fin Setback with J-channel

74—1-1/2" Contour Z-bar

75—1-1/2" Flat Z-bar

76—Double Single Hung - 1-3/8" Fin Setback

77—Double Single Hung above 2 Lites - 1-3/8" Fin Setback

78—Double Single Hung below 2 Lites - 1-3/8" Fin Setback

79—Single Hung above - Block Frame

80—True Divide - Block Frame

81—Triple Single Hung - Block Frame

82—Single Single Hung - Z-bar frame

Revit, SketchUp, .PDF and .DWG files can be accessed at
milgard.com/professionals/technical-resources

© Milgard Manufacturing, Inc.

Single Hung Window

1-3/8" Fin Setback

CAD File Scale	View	File Name	Units
NTS	Horizontal & Vertical	6210-01SH	Inch

More Technical Documents can be found at **milgard.com/professionals**

Due to continual research and development, details may be changed at any time. ©2013 Milgard Mfg.

SINGLE HUNG
SERIES 6210

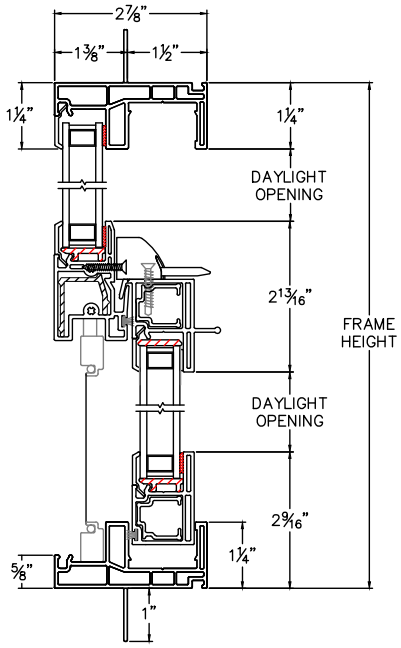

HEAD & SILL

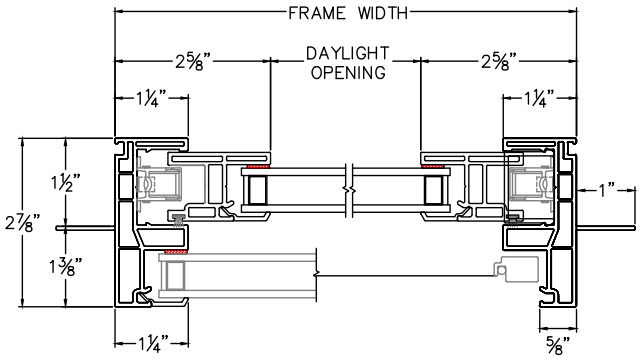

JAMBS

Revit, SketchUp, .PDF and .DWG files can be accessed at
milgard.com/professionals/technical-resources

Go back to Quick Links

© Milgard Manufacturing, Inc.

Single Hung Window

1-" Fin Setback with Stucco Key

CAD File Scale	View	File Name	Units
NTS	Horizontal & Vertical	6230-01SH	Inch

More Technical Documents can be found at **milgard.com/professionals**

Due to continual research and development, details may be changed at any time. ©2013 Milgard Mfg.

SINGLE HUNG
SERIES 6230

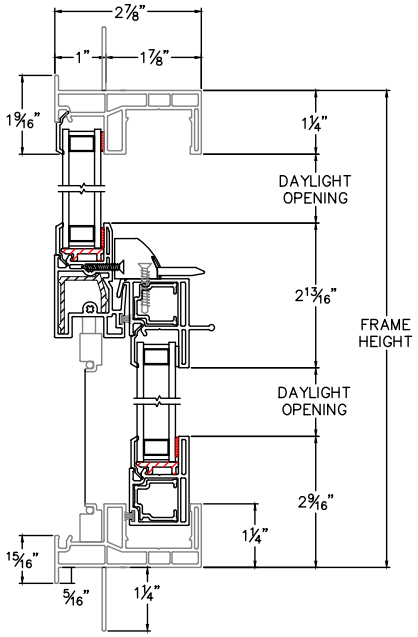

HEAD & SILL

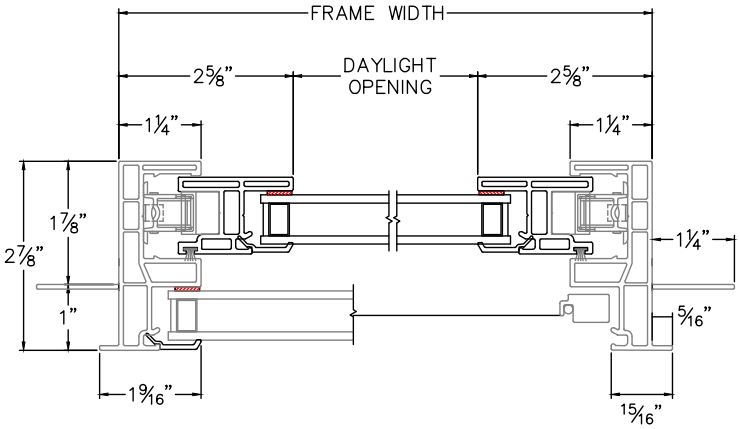

JAMBS

Revit, SketchUp, .PDF and .DWG files can be accessed at
milgard.com/professionals/technical-resources

Go back to Quick Links

© Milgard Manufacturing, Inc.

Single Hung Window

1-3/8-" Fin Setback with Stucco Key

CAD File Scale	View	File Name	Units	Revision
NTS	Horizontal & Vertical	StyleLine_6211_SH_1.375in_stucco	Inch	6/2015

More Technical Documents can be found at **milgard.com/professionals**

Due to continual research and development, details may be changed at any time. ©2013 Milgard Mfg.

SINGLE HUNG
SERIES 6211

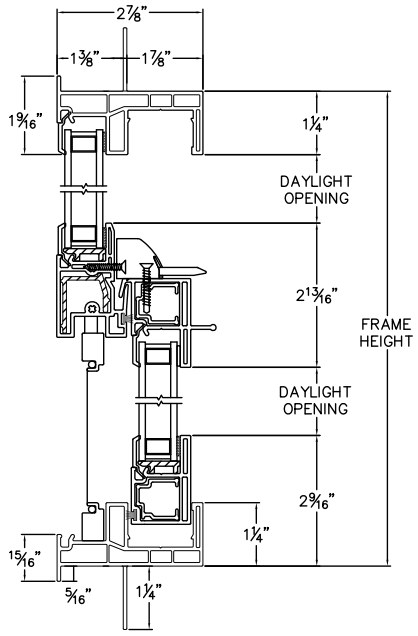

HEAD & SILL

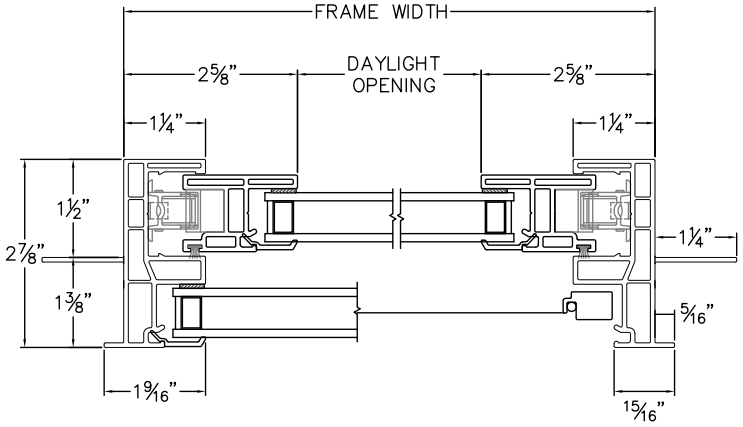

JAMBS

Revit, SketchUp, .PDF and .DWG files can be accessed at
milgard.com/professionals/technical-resources

Go back to Quick Links

© Milgard Manufacturing, Inc.

Single Hung Window

1″ Fin Setback with J-channel

CAD File Scale	View	File Name	Units
NTS	Horizontal & Vertical	6230J-01SH	Inch

More Technical Documents can be found at **milgard.com/professionals**

Due to continual research and development, details may be changed at any time. ©2013 Milgard Mfg.

SINGLE HUNG
SERIES 6230J

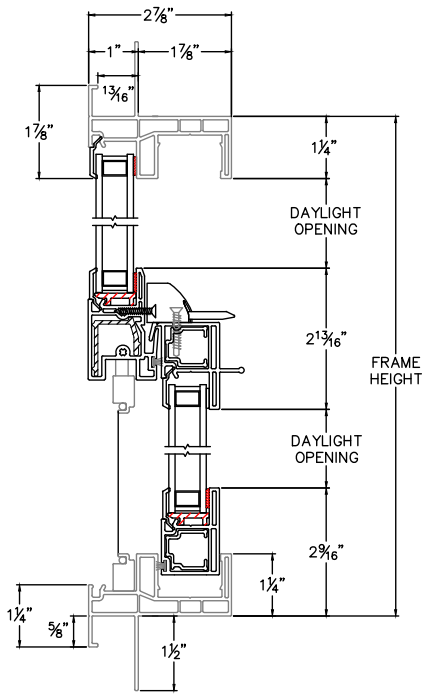

HEAD & SILL

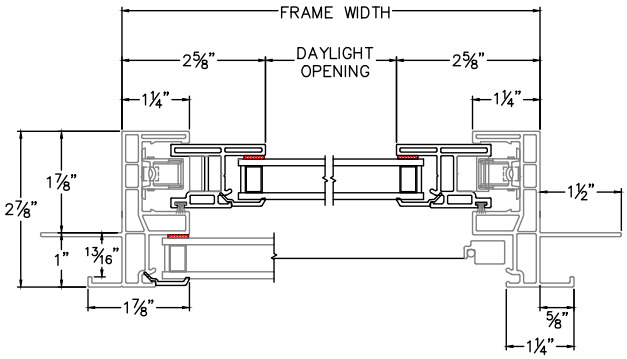

JAMBS

Revit, SketchUp, .PDF and .DWG files can be accessed at
milgard.com/professionals/technical-resources

Go back to Quick Links

© Milgard Manufacturing, Inc.

Single Hung Window

1-1/2" Contour Z-bar

CAD File Scale	View	File Name	Units
NTS	Horizontal & Vertical	6270-01SH	Inch

More Technical Documents can be found at **milgard.com/professionals**

Due to continual research and development, details may be changed at any time. ©2013 Milgard Mfg.

SINGLE HUNG
SERIES 6270

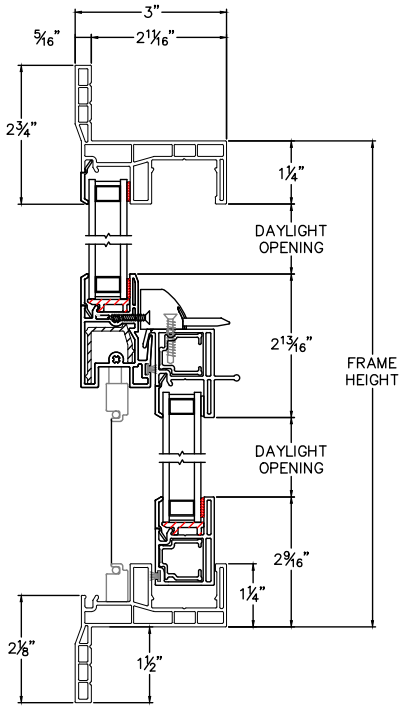

HEAD & SILL

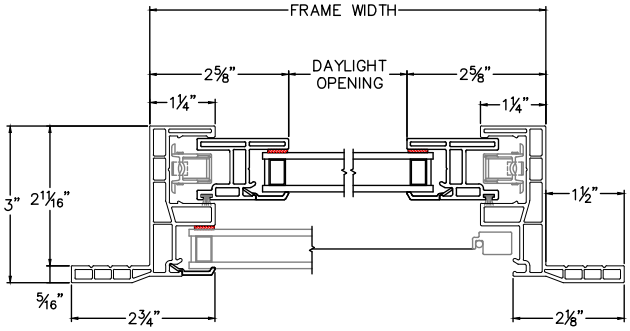

JAMBS

Revit, SketchUp, .PDF and .DWG files can be accessed at
milgard.com/professionals/technical-resources

Go back to Quick Links

© Milgard Manufacturing, Inc.

Single Hung Window

1-1/2" Flat Z-bar

CAD File Scale	View	File Name	Units
NTS	Horizontal & Vertical	6270-02SH	Inch

More Technical Documents can be found at **milgard.com/professionals**

Due to continual research and development, details may be changed at any time. ©2013 Milgard Mfg.

SINGLE HUNG
SERIES 6270

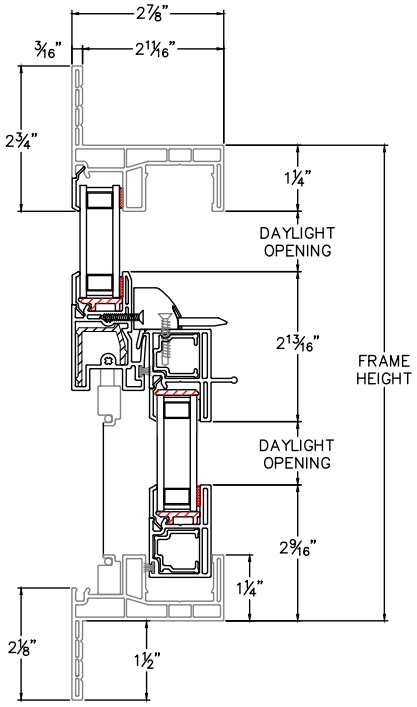

HEAD & SILL

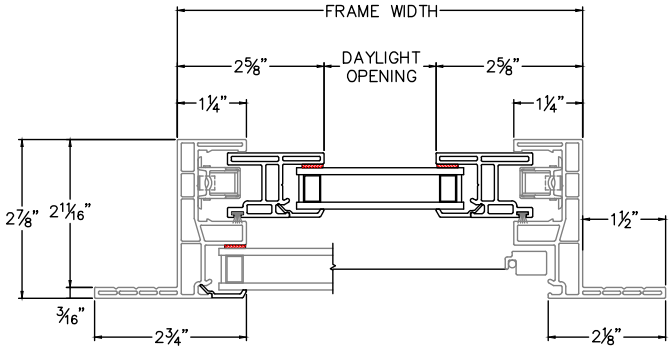

JAMBS

Revit, SketchUp, .PDF and .DWG files can be accessed at
milgard.com/professionals/technical-resources

Go back to Quick Links

© Milgard Manufacturing, Inc.

Single Hung Window

Double Single Hung - 1-3/8" Fin Setback

CAD File Scale	View	File Name	Units
NTS	Horizontal & Vertical	StyleLine 6210 DSH 1.375in	Inch

More Technical Documents can be found at **milgard.com/professionals**

Due to continual research and development, details may be changed at any time. ©2013 Milgard Mfg.

SINGLE HUNG
SERIES 6210

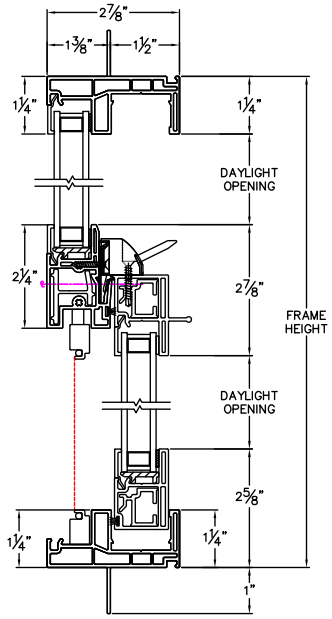

HEAD & SILL

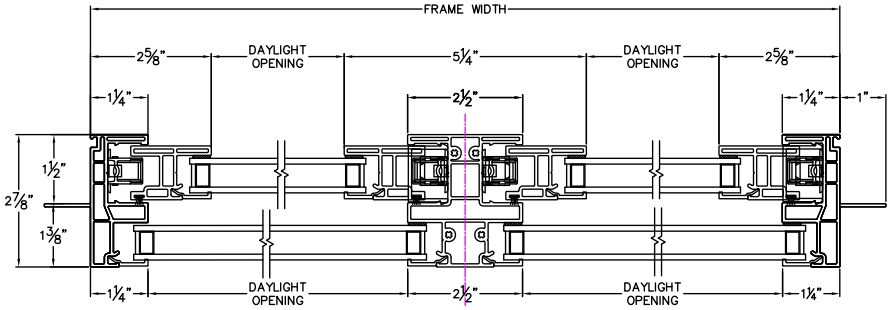

JAMBS

Revit, SketchUp, .PDF and .DWG files can be accessed at
milgard.com/professionals/technical-resources

Go back to Quick Links

© Milgard Manufacturing, Inc.

Single Hung Window

Double Single Hung above 2 Lites - 1-3/8" Fin Setback

CAD File Scale	View	File Name	Units
NTS	Horizontal & Vertical	StyleLine_6210_DSH_above_2_lites_1.375in	Inch

More Technical Documents can be found at **milgard.com/professionals**

Due to continual research and development, details may be changed at any time. ©2013 Milgard Mfg.

DOUBLE SINGLE HUNG ABOVE 2 LITES
SERIES 6210

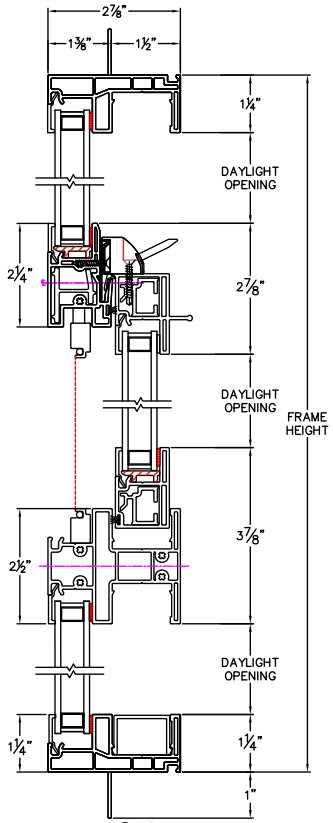

HEAD & SILL

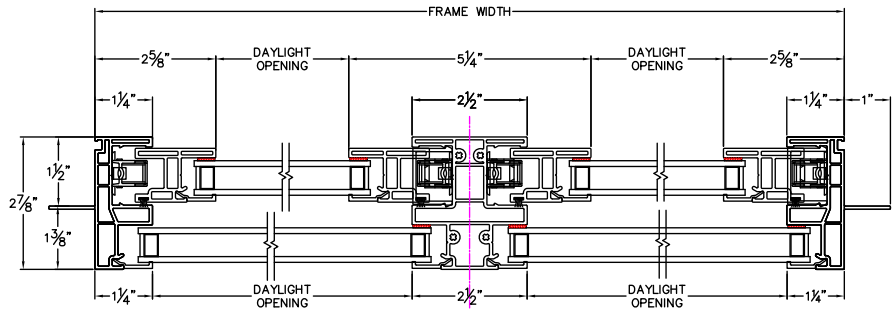

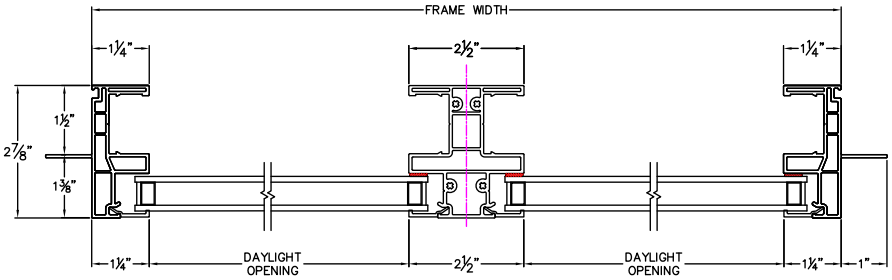

JAMBS

Revit, SketchUp, .PDF and .DWG files can be accessed at
milgard.com/professionals/technical-resources

Go back to Quick Links

© Milgard Manufacturing, Inc.

Single Hung Window

Double Single Hung below 2 Lites - 1-3/8" Fin Setback

CAD File Scale	View	File Name	Units
NTS	Horizontal & Vertical	StyleLine_6210_DSH_below_2-lites_1.375in	Inch

More Technical Documents can be found at **milgard.com/professionals**

Due to continual research and development, details may be changed at any time. ©2013 Milgard Mfg.

DOUBLE SINGLE HUNG BELOW 2 LITES
SERIES 6210

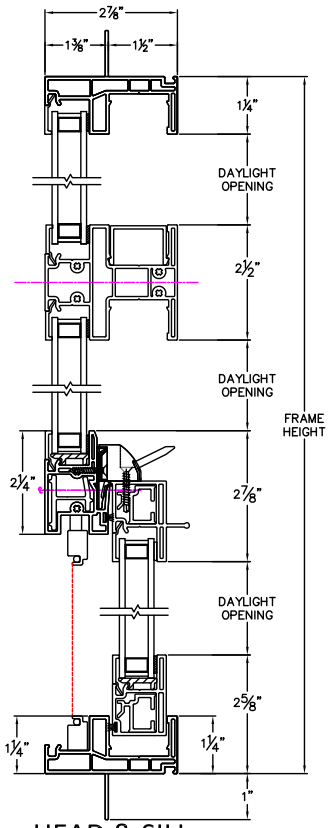

HEAD & SILL

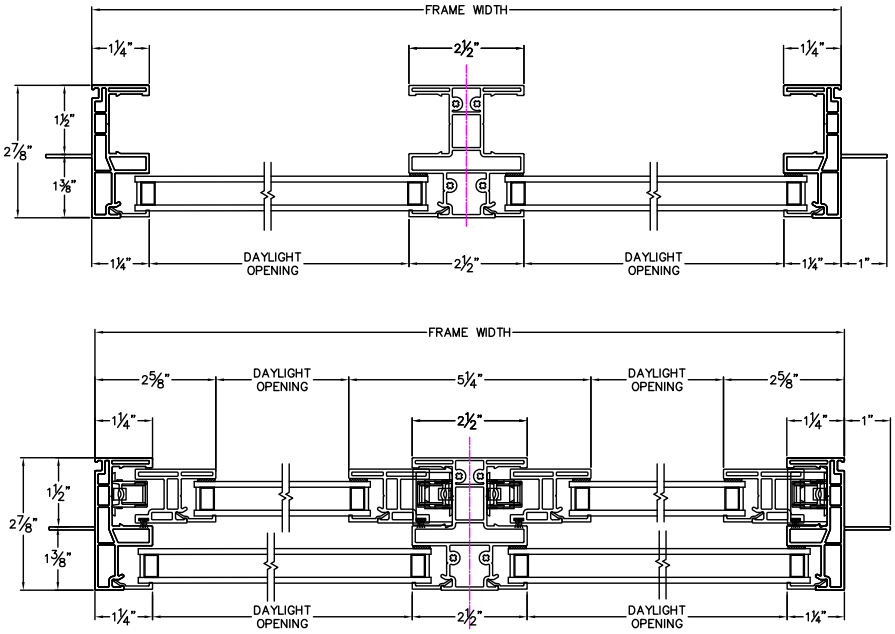

JAMBS

Revit, SketchUp, .PDF and .DWG files can be accessed at
milgard.com/professionals/technical-resources

Go back to Quick Links

© Milgard Manufacturing, Inc.

Single Hung Window

Single Hung above - Block Frame

CAD File Scale	View	File Name	Units
NTS	Horizontal & Vertical	6210 SHA	Inch

More Technical Documents can be found at **milgard.com/professionals**

Due to continual research and development, details may be changed at any time. ©2013 Milgard Mfg.

SINGLE HUNG ABOVE
SERIES 6210

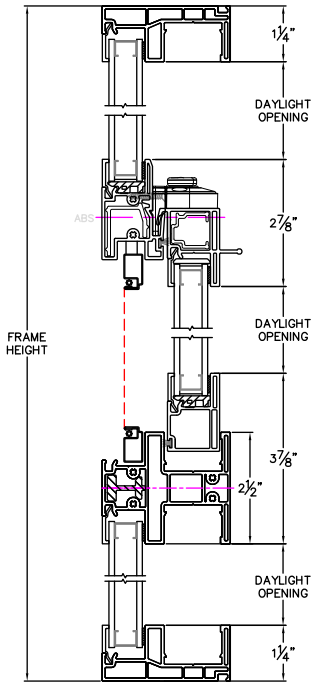

HEAD & SILL

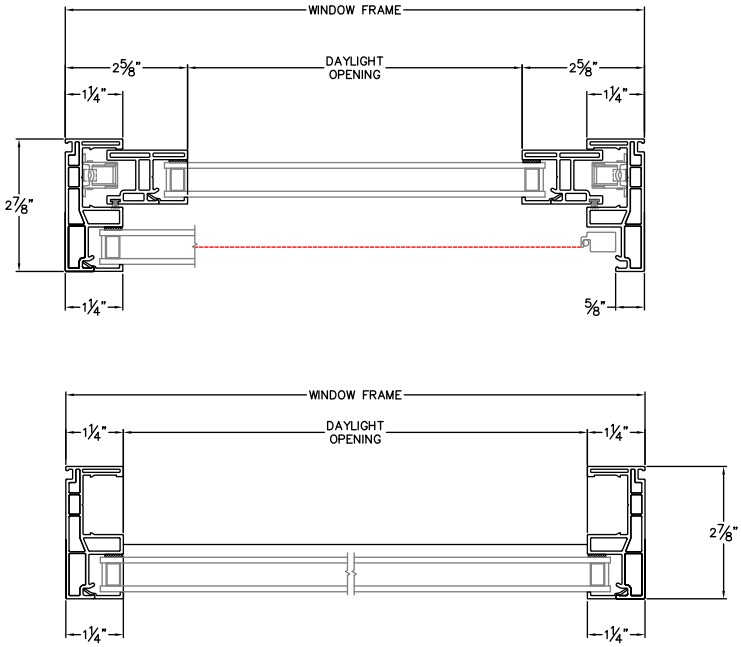

JAMBS

Revit, SketchUp, .PDF and .DWG files can be accessed at
milgard.com/professionals/technical-resources

Go back to Quick Links

© Milgard Manufacturing, Inc.

Single Hung Window

True Divide - Block Frame

CAD File Scale	View	File Name	Units
NTS	Horizontal & Vertical	StyleLine_6210_SHTT_block	Inch

More Technical Documents can be found at **milgard.com/professionals**

Due to continual research and development, details may be changed at any time. ©2013 Milgard Mfg.

SINGLE HUNG
SERIES 6210

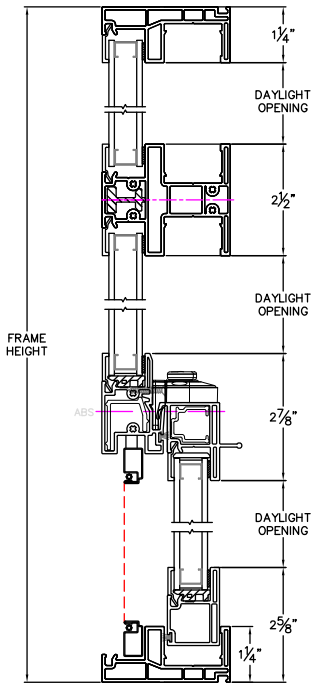

HEAD & SILL

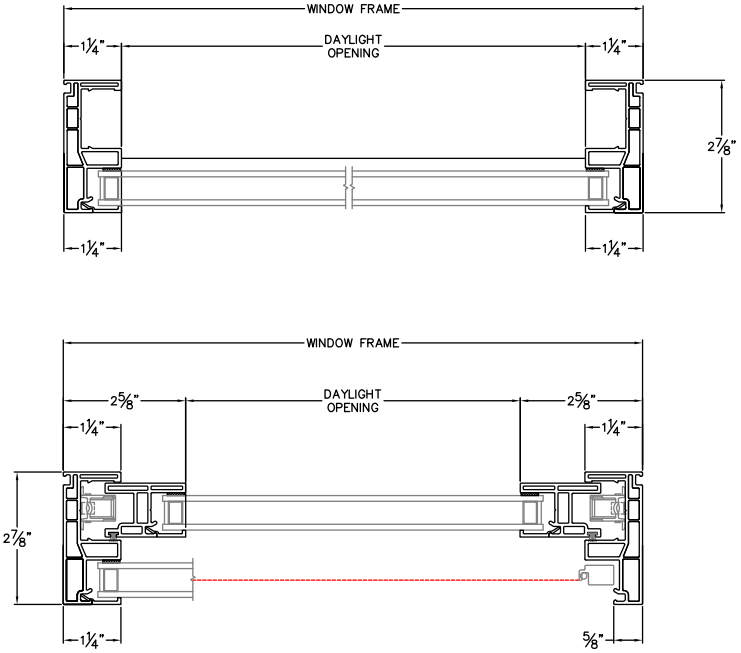

JAMBS

Revit, SketchUp, .PDF and .DWG files can be accessed at
milgard.com/professionals/technical-resources

Go back to Quick Links

© Milgard Manufacturing, Inc.

Single Hung Window

Triple Single Hung - Block Frame

CAD File Scale	View	File Name	Units
NTS	Horizontal & Vertical	StyleLine_6210_TSH_block	Inch

More Technical Documents can be found at **milgard.com/professionals**

Due to continual research and development, details may be changed at any time. ©2013 Milgard Mfg.

SINGLE HUNG
SERIES 6210

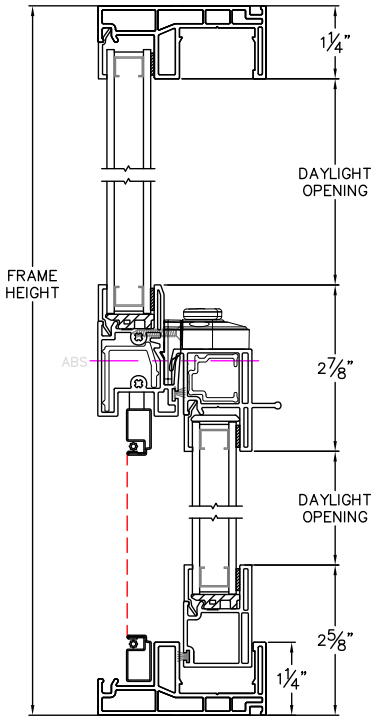

HEAD & SILL

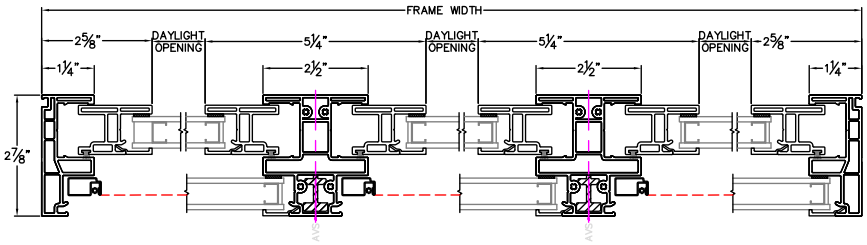

JAMBS

Revit, SketchUp, .PDF and .DWG files can be accessed at
milgard.com/professionals/technical-resources

Go back to Quick Links

© Milgard Manufacturing, Inc.

Single Hung Window

Single Single Hung - Z-bar frame

CAD File Scale	View	File Name	Units
NTS	Horizontal & Vertical	StyleLine_6270_SSH_z-bar	Inch

More Technical Documents can be found at **milgard.com/professionals**

Due to continual research and development, details may be changed at any time. ©2013 Milgard Mfg.

SINGLE HUNG
SERIES 6270

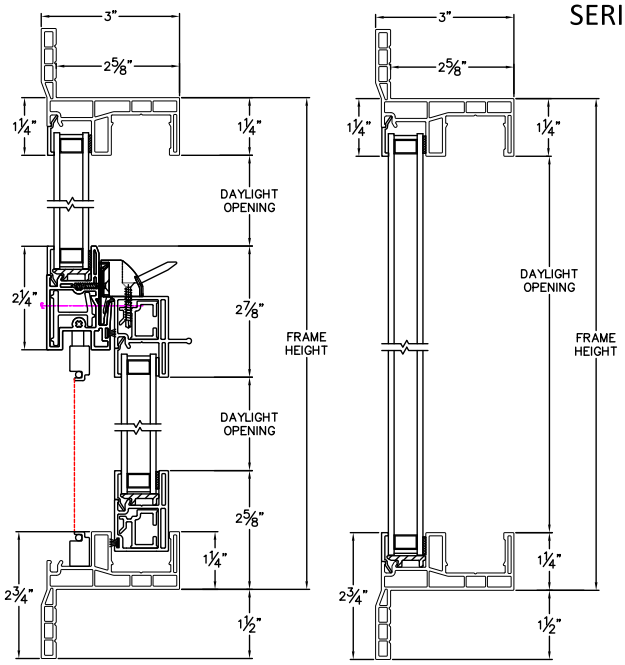

HEAD & SILL

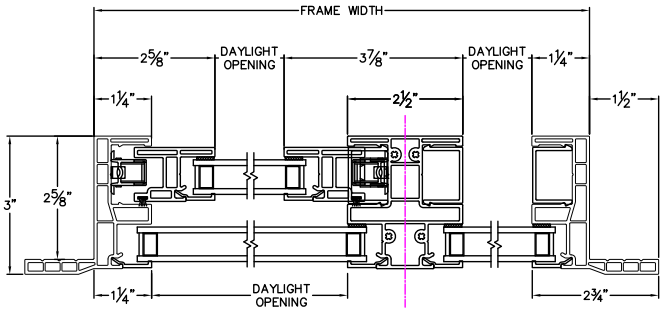

JAMBS

Revit, SketchUp, .PDF and .DWG files can be accessed at
milgard.com/professionals/technical-resources

Go back to Quick Links

© Milgard Manufacturing, Inc.

5.0 ARCHITECTURAL REVIEW OUTSIDE THE HISTORICAL DISTRICT

5.1 Existing Residential Neighborhoods

Outside the Historical District, in recognition of the diversity of architectural styles that developed in Nevada City and contribute to its character, the City zoning regulations also define as being important to Nevada City and require permits to protect those homes and neighborhoods that are known as being of the pre-World War II era, i.e. pre-1942. Architectural review permits are required for construction or renovation of all buildings and structures in existing neighborhoods – including new construction of or additions to residences or outbuildings; alteration of the exterior appearance; and any removal, demolition or razing and replacing of any part of any such building or structure – to make sure that such projects conform to the 'context of the neighborhood' and are generally compatible with the style of architecture therein respecting changes that over time may have acquired significance in their own right.

Distinctive stylistic features and examples of skilled craftsmanship of both Mother Lode and pre-WW II buildings and structures should be treated with sensitivity. Removal or alteration of historical material or distinctive features should be avoided wherever possible and distinguishing original qualities or character of the building, structure or site and environment should not be destroyed. Alterations to older homes should match the existing style, materials and details. Synthetic materials are discouraged. Like-for-like replacements and repairs are recommended.

New projects, additions to homes and renovations, as well as construction of new outbuildings, must be generally compatible with Nevada City's style of architecture. Such projects should conform to the "context of the neighborhood" previously discussed in these Guidelines

Nevada City Architecture or Mother Lode type of architecture is defined as "that type of architecture generally used in the Mother Lode region of the state of California during the period from 1849 and 1900. Such type of architecture involves the use of wood and brick as primary materials, and is generally characterized by such design features, among others, as gabled or shed roofs, tall and narrow windows and doors, dormer windows, iron or wooden shutters, balconies, wooden awnings and ornamental scroll work.

The determination of whether a building conforms with the Mother Lode type of architecture shall include all factors which affect the external appearance of the building, including, without limitation, architectural elevations, building materials, colors, finish, lighting, ornamental devices and signs.

Features typical of Mother Lode era architecture such as:

- Roof Pitches. Main roofs steeply peaked (6:12 to 12:12) with overhangs and gable ends.
  Hipped roofs in the appropriate architectural context are allowed. (Victorian homes were often very vertical in appearance and the relationship of the size of the house to the roof should be considered).

6:12 pitch

8:12 pitch

8:12 with gabled dormer

Roof Pitch and Height Limit

The Zoning Ordinance provides the height limit for the various zoning districts, with the residential zones having a height limit of 35 feet. The following heights are recommended:

Roof Pitch	**Stories**	**Height Limit**
12:12	1	28'
12:12	2	35'
6:12	1	20'
6:12	2	28'

Front, rear and side elevations should be similar in height and size to surrounding homes

- Siding for Existing Homes. Painted wood horizontal siding, board and batten. Cement fiber board, vinyl siding, and other synthetic siding (such as T-111 siding) is discouraged in older neighborhoods particularly when the neighborhood is in close proximity to pre-1942 homes or if the home itself is pre-1942 or exhibits a style which is not complemented by these types of siding.

- Materials, New Homes. Materials on new homes will be reviewed against the context of the neighborhood. If modern materials are used, they should match historic materials in appearance.

- Materials, Older Homes and Structures. Alterations to older homes and structures should match existing, historic materials. Synthetic materials with no historic basis are discouraged on both existing older home additions and renovations. Removal or alteration of any historic material or distinctive architectural features should be avoided when possible

- Covered porches and entries. Such entries and porches usually have shallower roof slopes.

Zion Street
4-plex

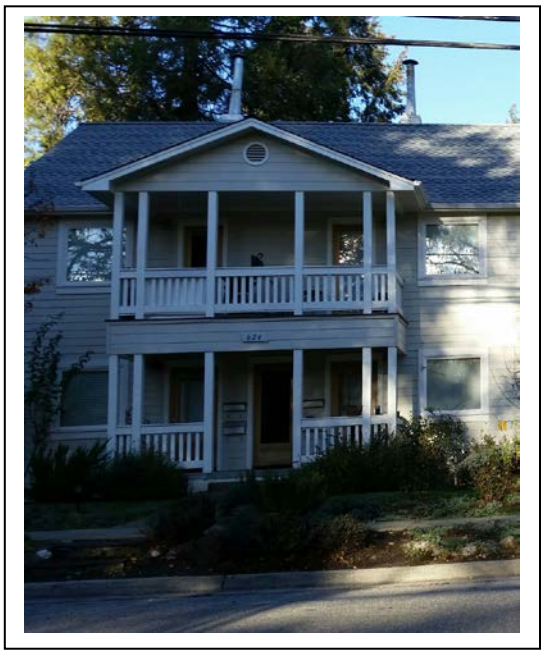

- Trim, railings, and details should have a historic basis and fit the style of the existing home or new structure.

- Roofing material. Asphalt shingles and metal roofing in muted non-glare colors such as tans, blacks, browns, and greens have historically been approved on new homes and additions. The use of corrugated metal has also been approved.

- Exterior Colors. There is no color review or approval required for change in colors of a home outside the Historical District. However, the following guidelines are recommended:
  - Select colors that are similar to the tones found in the area and on adjacent buildings
  - Muted, soft colors on large wall expanses are encouraged
  - The use of bright, modern colors and intense white color are discouraged.
  - Use subdued colors as the primary color and brighter, contrasting trim when appropriate
  - Incorporate the color from primary building materials, such as stone, brick and

Table of Contents Link

hardwood, as the base colors for new development

Alexander St

- Windows. Typical windows include multi-pane, vertical, and bay windows. Wood windows and true divided lights are generally required of additions, renovations and newly constructed homes in older neighborhoods though existing window types may be duplicated.

Bay Window
Sacramento St

Discussion on Wood Windows

The Design Guidelines have, in the past, preferred the use of historically correct wood windows. The design of windows is continuously evolving as they become more efficient and maintenance free. Wood windows require maintenance throughout their life time, mainly painting. Because of these maintenance issues, the wood window is not as popular as the same window with "cladding" on the wood exposed to the weather. The cladding replaces the layers of paint on the wood window. The cladding can be several materials with aluminum and vinyl being the most popular. The cladding protects the wood and usually never needs painting. This is good for the homeowner and the environment.

There are two important points to be made. First, this discussion is not relative to a vinyl or aluminum window but is for discussion of a clad wood window. It is difficult to make a solid vinyl or aluminum window match the proportions of the true wood window. Secondly, referring to the two images below of an actual wood window and the same window with white colored cladding, it is easy to see that the proportions and dimensions as basically identical.

There also are windows made from fiberglass for strength and low maintenance. The Planning Commission will consider the fact that if the windows have the same proportions of a wood window, they can possibly be considered as meeting the City's requirements.

Wood Clad Window

Vinyl Clad Window

Below are photograph of homes that meet the definition of "Mother Lode Architecture" (Classic 19th Century)

Miner's Cabin on Cabin Street

Victorian on Prospect Street

Below are examples of pre-WW II homes 20th Century to 1942

North Pine Street, about 1935

Adams Street, about 1930

Coyote Street, about 1938

Below are examples of 1940's to 1970's homes

Brock Road, about 1948

Gold Tunnel Road, 1950's

Lindley Avenue, about 1960

Turpentine Drive, 1970 (part of Steger Tract Subdivision)

Below are a 'before and after' photograph of a renovation consistent with Mother Lode Architecture.

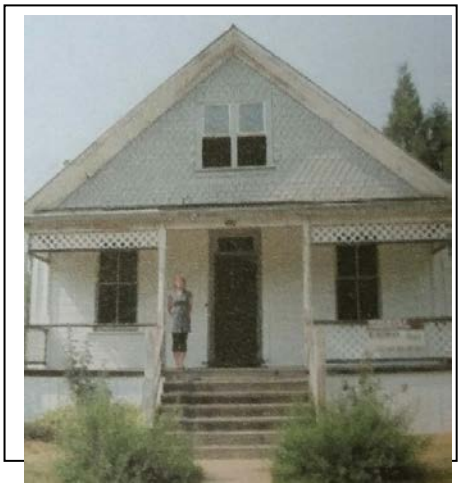

Before (2000)

After (2014)

This home on Sacramento Street, built in 1891, was granted approval to remodel the home by adding conditioned living space to the attic area of the home. The home contains 1,348 sq ft and the project added 1,082 sq ft of conditioned area. Interior work to the home was done and like-for-like windows were replaced. The new conditioned area became living space and the roof was raised by 4 feet. New dormers and windows were added to this area and materials matched those of the existing home and those in the immediate area. Railings and steps were replaced.

.

Winter Street, new home built in 1990 (replacing original due to fire)

<u>Additions</u>. Nevada City is concerned about retaining a mix of housing sizes for affordable housing and historic preservation. As a result, major additions should not overwhelm the original structure. The integrity of the original structure should be retained. Additions to homes that are greater than 25% of the floor area are considered by the Planning Commission. Additions less than 25% with materials matching the home can be approved by staff; however the City Planner always has the ability to send an application to the Planning Commission for approval.

436 Washington Street – 25% addition to west side of home by extending kitchen and adding bay window (2013)

Garages and Accessory Structures, Second Dwelling Units

Accessory building means a "detached subordinate building located on the same premises as the main building or buildings, the use of which is customarily incidental to that of the main building or to the use of the land. Said accessory building shall not be used as sleeping or housekeeping quarters." However, the City's second dwelling unit ordinance does encourage second dwelling units above new garages.

Accessory buildings such as guest houses, garages, barns, and workshops should be designed to fit the character of the neighborhood and with adherence to all of the appropriate guidelines in this section. Accessory structures should complement the main building's architecture (design, materials, color, etc.).

Existing accessory structures often contribute to the significance of the property and should be retained. Repair and restoration of such structures is desired rather than removal. If the structure is pre-WWII or of special historic or architectural value, it will not be permitted to be demolished without approval of a Demolition Permit which requires a finding by the Planning Commission that the building cannot be reasonably repaired or restored. (See Attach #11.2)

Accessory buildings can be detached from the main residence or attached (or may be connected by a breezeway). Accessory buildings need to comply with all requirements as the main residence including setbacks and undergo architectural review by the Planning Commission.

Exceptions to setbacks and design review are small accessory structures (such as tool sheds) that are less than 160 square feet in size; such structures are placed in the rear half of the lot and cannot exceed 30% of the rear yard area. Staff can assist with the placement of such structures to ensure compliance with the zoning ordinance.

Garage patterns in the existing neighborhood should be respected. For example, if rear detached garages are the norm, it is a good idea for any new garages to follow that form. Where single garage doors are common, new two car garages should use two similar doors instead of one larger double door. Regardless, the garage should not be the dominant feature of a front elevation.

Garage behind home – Clay Street

Garage, Alexander Street

Second Dwelling Units

The City adopted Ordinance 2008-14, finding that such dwelling units are an important form of housing that contributes to the character and diversity of housing opportunities in Nevada City. Such a unit is defined as an attached (640 square feet maximum) or detached unit (800 square feet) that is smaller and secondary to the main residence. Second dwelling units can also be constructed above a new garage (640 square feet maximum). A use permit can be submitted by the owner to the Planning Commission for any deviation in unit size.

Second dwelling units are permitted in all zoning districts that allow single family dwellings as a permitted use. The City encourages residential second dwelling units and has imported standards that enable homeowners to create such units to be compatible, as much as possible, with the neighborhood.

Second dwelling units are approved at staff level by the City Planner with submittal of an application, site plan and any required fees. Units are subject to standards such as:

1. Must meet building and fire codes
2. Payment of public water and sewer fees, along with AB1600 Mitigation Fees (can be waived with a 30-year deed restriction ensuring affordable rent at "low" or "very low" income levels as established by the State of California.
3. Each unit shall have one spate off street parking space (in addition to two spaces required for main residence).
4. One of the residences shall be occupied by the owner of the property.
5. Lot coverage of all buildings cannot exceed 50 percent.
6. Materials, colors and architecture shall be similar to the primary unit.
7. Lighting shall not spill onto neighboring lots.
8. Entrances shall be screened from neighboring properties.

:

American Hill Rd. - 2nd unit under construction

Chief Kelly Dr. - 2nd unit above garage

Table of Contents Link

5.2 New Residential Neighborhoods

New homes in new subdivisions or previously undeveloped neighborhoods must exhibit high quality design which is compatible and sympathetic to Nevada City's Mother Lode architecture incorporating traditional materials, building lines, features, and landscaping wherever possible. For example:

Features typical of Mother Lode era architecture:

- Roofs may vary in their design and detailing which is more flexible than the review standard in older neighborhoods, but they should be steeply pitched (6:12 to 12:12).
- Wall material - Siding on new homes in new neighborhoods should be high quality and at least reminiscent of traditional materials. Painted siding, cement fiber siding, shingles, and traditionally surfaced stucco are examples or preferred materials though it must be reviewed for furthering the intent of achieving a continuation of Mother Lode architecture. T-111 type siding, vinyl, and other synthetic siding are strongly discouraged.
- Covered porches and entries should be used wherever possible to continue a Nevada City architectural tradition.
- Windows should match the style of the house. Multi-pane, vertical, and bay windows are encouraged with variations to fit the style of the house.
- Trim, railing, and details should fit the style of the new house. The intent should be to add texture, shadowing, contrast, and interest which are reminiscent of the City's older homes.
- Roofing material such as treated wood shingles, asphalt shingles, and metal roofing in muted non-glare colors such as tans, blacks, browns, greens and grays are desired.
- Colors. Colors are not reviewed outside the Historic District. However, the following guidelines are recommended:
    - Select colors that are similar to the tones found in the area and on adjacent buildings
    - Muted, soft colors on large wall expanses are encouraged
    - The use of bright, modern colors and intense white color are discouraged.
    - Use subdued colors as the primary color and brighter, contrasting trim when appropriate
    - Incorporate the color from primary building materials, such as stone, brick and hardwood, as the base colors for new development

Approved Elevations for varied housing styles within a subdivision off Gracie Road

Lost Hill Drive Residences (subdivision approved in 2000)

ada City Cottages, i- family project in 2005

Table of Contents Link

City of Nevada City

TO: Planning Commission

FROM: Amy Wolfson, City Planner

MEETING DATE: January 16, 2020

APPLICANT: Nevada County Historical Society, represented by Linda Jack

RE: **Plaque Proposal to Honor Ellen Clark Sargent in Calanan Park (*Continued from the December 19, 2019 meeting)***

ATTACHMENTS:

1. Historic Plaque Application
2. Revised Plaque Text Exhibit
3. Picture of existing granite form proposed to hold the plaque

BACKGROUND: At the November 21, 2019 meeting, the Historical Society presented a plaque proposal to place a plaque in an existing granite form at Calanan Park. The plaque would honor Ellen Clark Sargent's contribution to the women's suffrage movement. The Commission approved the style and location of the plaque with a condition that reference to Aaron Sargent be omitted from the plaque text. At the December 19, 2019 meeting, they returned with a revised option to include a photograph of Ellen Sargent and also asked that the Commission reconsider the condition to omit Aaron Sargent from being referenced in the text. At the December meeting the Commission voted to continue the item to a future meeting with direction to the applicant to add language that strengthens understanding of Ellen Sargent's role in the suffrage movement.

PLAQUE DESIGN: The plaque text has been updated to better highlight Ellen Sargent's role in the eventual passage of the 19th Amendment to the US Constitution. The plaque will be similar in design style to the one mounted on 309 Broad Street (Golden Era), but will feature text honoring Sargent:

Plaque at 309 Broad St.

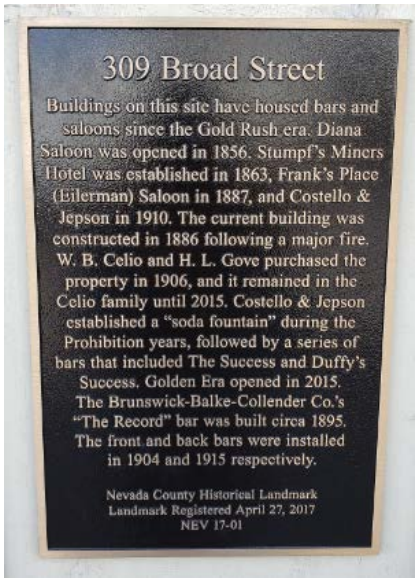

Proposed Plaque Text

ELLEN CLARK SARGENT
(1826-1911)

Prominent Suffragist

Ellen Clark Sargent, a native of Massachusetts, arrived in Nevada City in 1852. A leader in the fight for women's right to vote, she founded the Nevada County Woman's Suffrage Association in 1869. She was the President of the California Woman Suffrage Association and Treasurer of the National Woman Suffrage Association. Her tireless work resulted in California women winning the right to vote in 1911. Her campaign for national women's suffrage led to the introduction in 1878 of the 19th amendment to the U.S. Constitution by her husband, U.S. Senator A. A. Sargent. After many hard-fought battles by the Women's Suffrage movement, the 19th amendment was finally enacted into law on August 20, 1920.

Landmark registered _____ __, 2020 by the
Nevada County Historical Landmarks Commission NEV 20-0?
Plaque dedicated 2020 by
The Grand Parlor of the Native Daughters of the Golden West,
The Captain John Oldham Chapter, National Society
Daughters of the American Revolution, and
The Nevada County Historical Society

RECOMMEDATION ACTION: Make a motion to approve placement of the plaque as presented, and as may be modified or conditioned by the Planning Commission.

HISTORIC PLAQUE APPLICATION FORM

Building Address: CALANAN PARK, COR. BROAD + UNION STS

Owner's Name(s): NEVADA CITY, FORMERLY NATIVE DAUGHTERS

Telephone Numbers: (Home) _____ (Office) _____

Owner(s) Address: _____

Email Contact: _____

Plaque Vendor Contact: _____ (Email) _____

Date(s) of Original Construction (and of any additions): PARK ACQUIRED BY NATIVE DAUGHTERS - 1922

Provide the following information about your building:

Is this building considered a contributing building to the Nevada City Historic District's inclusion on the National Register of Historic Places? Y / N

Is this building associated with a notable person or event? If so provide a succinct description of the person or event and their relationship with the building.

PLAQUE WILL HONOR ELLEN SARGENT, PROMINENT SUFFRAGIST. SHE FOUNDED NEVADA COUNTY WOMAN'S SUFFRAGE ASSOCIATION IN 1869. THE ASSOCIATION MET IN VARIOUS BUILDINGS, SOME OF WHICH NO LONGER EXIST, LOCATED AROUND CALANAN PARK

Please sign the following statement:

The applicant(s) certifies that the information on this application is true and accurate to the best of his/her knowledge.

Signed: _____

Print Name: _____

(if not the owner, an owner authorization statement must be submitted)

Date: _____

HISTORIC PLAQUE APPLICATION FORM

Building Address: Calanan Park, corner of Broad St. and Union St.

Owner's Name(s): Nevada City, formerly Native Daughters of the Golden West

Telephone Numbers: (Home) (Office)

Owner(s) Address:

Email Contact:

Plaque Vendor Contact: TBD (Email) _____

Date(s) of Original Construction (and of any additions): Park acquired by Native Daughters in 1922

Provide the following information about your building:

Is this building considered a contributing building to the Nevada City Historic District's inclusion on the National Register of Historic Places? Y / N

Is this building associated with a notable person or event? If so provide a succinct description of the person or event and their relationship with the building.

The plaque will honor Ellen Clark Sargent, a prominent suffragette who was an important advocate for woman's suffrage at the local, state, and national level. She arrived in Nevada City in 1852, joining her husband Aaron A. Sargent who had arrived in the city in 1849. Ellen's advocacy of the woman's suffrage movement spanned much of her adult life, from the late 1860s until her death on July 13, 1911. Susan B. Anthony was a close friend of Ellen, and a frequent guest in the Sargent homes in California and Washington D.C. Ellen was associated with many of the important national suffrage organizations. Regrettably, Ellen died three months before California voted to grant women the right to vote in the election of October 10, 1911.

Ellen's political activism in Nevada City included the formation of the Nevada County Woman's Suffrage Association in 1869. The organization included many of the prominent women of the city and had male advocates as well. The organization's activities cannot be associated with any particular location(s) in Nevada City as the meetings were held at the homes of at least six of the members, and at several different public buildings, some of which no longer exist. But most of their meetings were held in the downtown area. The night before the California election on October 10, 1911, a grand rally was held as the crowd processed through the streets down to the bottom of Broad Street for speeches and music. Calanan Park would provide a central focus for the woman's suffrage movement locally, and for Ellen Clark Sargent's contributions to it.

Please sign the following statement:

The applicant(s) certifies that the information on this application is true and accurate to the best of his/her knowledge.

Signed: Linda K. Jack

Print Name: Linda K. Jack, Nevada County Historical Society (if not the owner, an owner authorization statement must be submitted)

Date: 10-1-2-19

ELLEN CLARK SARGENT
(1826-1911)

Prominent Suffragist

Ellen Clark Sargent, a native of Massachusetts, arrived in Nevada City in 1852. A leader in the fight for women's right to vote, she founded the Nevada County Woman's Suffrage Association in 1869. She was the President of the California Woman Suffrage Association and Treasurer of the National Woman Suffrage Association. Her tireless work resulted in California women winning the right to vote in 1911. Her campaign for national women's suffrage led to the introduction in 1878 of the 19th amendment to the U.S. Constitution by her husband, U.S. Senator A. A. Sargent. After many hard-fought battles by the Women's Suffrage movement, the 19th amendment was finally enacted into law on August 20, 1920.

Landmark registered _____ __, 2020 by the
Nevada County Historical Landmarks Commission NEV 20-0?
Plaque dedicated 2020 by
The Grand Parlor of the Native Daughters of the Golden West,
The Captain John Oldham Chapter, National Society
Daughters of the American Revolution, and
The Nevada County Historical Society

16X16