City of Nevada City

PLANNING COMMISSION AGENDA
THURSDAY, FEBRUARY 20, 2020 1:30 PM
Council Chambers – City Hall
317 Broad Street - Nevada City, CA 95959

•AUDIENCE MEMBERS DESIRING TO ADDRESS THE PLANNING COMMISSION ON ITEMS ON THE AGENDA: After recognition by the Chair, state your name, address and your comments or questions. Please direct your remarks to the Commission. So that all interested parties may speak, please limit your comments to the item under discussion. All citizens will be given the opportunity to speak, consistent with Constitutional rights. Time limits are at the discretion of the Chair. **•If you challenge** the Commission's decision on any matter in court, you will be limited to raising only those issues you or someone else specifically raised or delivered in writing to the Planning Commission at or prior to the meeting. **•Requests for disability-related modifications or accommodations** may be made by contacting the City Planner and should be made at least 72 hours prior to the meeting.

Mission Statement

The City of Nevada City is dedicated to preserving and enhancing its small town character and historical architecture while providing quality public services for our current and future residents, businesses and visitors.

PLEDGE OF ALLEGIANCE

ROLL CALL Chair Josie Andrews, Vice-Chair Jason Rainey Commissioners, Peter Van Zant, Stuart Lauters, and David Bohegian

APPROVAL OF ACTION MINUTES

1. December 19 , 2019 Meeting

HEARING FROM THE PUBLIC: Comments on items not on the agenda are welcome and are limited to three minutes. However, action or discussion by the Commission may not occur at this time.

DEPARTMENT REQUESTED ITEMS

2. City-wide Crosswalk Design Consideration

SIGN APPLICATION

3. 419 Broad- Ariel Wolansky –Cocoa Cafe

TREE REMOVAL

4. 319 Nevada Street – 13 Trees
5. 630 East Broad Street – 6 Trees
6. 403 South Pine Street – 4 Trees
7. 514 Nursery Street – 8 Trees

ARCHITECTURAL REVEW

8. 632 Zion Street- New Primary Dwelling
9. 224 Church Street – New garage door
10. 332 Jordan Street- New garage and tree removal

HISTORICAL PLAQUE PROPOSAL

11. Ellen Sargent Plaque Proposal

PUBLIC HEARING

12. National Hotel Sign Variance and Architectural Review

CANNABIS BUSINESS APPLICATIONS

13. Longitude Management, LLC – Proposed distribution-only business
14. Floracy – Amendment to allow for full distribution of any licensed product
15. Thrive Society (Changing to R&R Goods, Inc) – Amendment to change name and principals

PLANNING COMMISSION LIAISON REPORTS –Previously approved projects **– informational only**

STAFF APPROVALS AND DETERMINATIONS – (for information only):

519 Coyote Street – Side porch enclosure
214 Reward St. – Auxiliary Generator
519 Nimrod St. – Tree Removal (one Oak)
332 Jordan St. – Tree Removal (one Pine-dead)
222 Park Ave. – Tree Removal (one Maple)
200 Clay Street – Re-roof, like-for-like
320 Woodpecker – Re-roof, like-for-like
310 Gethsemane –Reroof, like-for like
785 Old Washington - Reroof, like-for like
414 Main Street – Roof-mounted solar
436 South Pine St – Tree Removal –one cedar
224 Reward – Generator
510 Main St. – Tree removal – two liquid ambers
220 Nihell – Tree removal – two dead pines
224 Grove - Reroof, like-for like
528 Main St- Second Dwelling
200 Clay -224 Grove - Reroof, like-for like

CORRESPONDENCE:

ANNOUNCEMENTS:

Next Regular Meeting – March 19, 2020

ADJOURNMENT

City of Nevada City

PLANNING COMMISSION ACTION MINUTES
THURSDAY, DECEMBER 19, 2019 1:30 PM
Council Chambers – City Hall
317 Broad Street - Nevada City, CA 95959

•AUDIENCE MEMBERS DESIRING TO ADDRESS THE PLANNING COMMISSION ON ITEMS ON THE AGENDA: After recognition by the Chair, state your name, address and your comments or questions. Please direct your remarks to the Commission. So that all interested parties may speak, please limit your comments to the item under discussion. All citizens will be given the opportunity to speak, consistent with Constitutional rights. Time limits are at the discretion of the Chair. **•If you challenge** the Commission's decision on any matter in court, you will be limited to raising only those issues you or someone else specifically raised or delivered in writing to the Planning Commission at or prior to the meeting. **•Requests for disability-related modifications or accommodations** may be made by contacting the City Planner and should be made at least 72 hours prior to the meeting.

Mission Statement

The City of Nevada City is dedicated to preserving and enhancing its small town character and historical architecture while providing quality public services for our current and future residents, businesses and visitors.

PLEDGE OF ALLEGIANCE

ROLL CALL Chair Josie Andrews, Vice-Chair Jason Rainey Commissioners, Peter Van Zant, Stuart Lauters, and David Bohegian

APPROVAL OF ACTION MINUTES

1. November 21, 2019

Public: None
Motion by P. Van Zant to approve the minutes as presented
Seconded by D. Bohegian
Vote: 3 ayes, 0 noes, 1 absent (Lauters), 1 abstention (Rainey), motion carries

HEARING FROM THE PUBLIC: Comments on items not on the agenda are welcome and are limited to three minutes. However, action or discussion by the Commission may not occur at this time.

See video record

SIGN APPLICATION

None

TREE REMOVAL

2. 9 Kidder Inn Town Campground – Request to remove five trees

Public: See video record
Motion by P. Van Zant to approve the tree removal as presented
Seconded by J. Rainey
Vote: 4 ayes, 0 noes, 1 absent (Lauters), motion carries

3. 555 Nevada- Request to remove one tree (two previously approved by staff)

Public: None
Motion by J. Rainey to approve the tree removal as presented
Seconded by D. Bohegian
Vote: 4 ayes, 0 noes, 1 absent (Lauters), motion carries

To Agenda

4. 210 Park Avenue – Request to remove three trees

Public: None
Motion by P. Van Zant to approve the tree removal as presented
Seconded by J. Rainey
Vote: 4 ayes, 0 noes, 1 absent (Lauters), motion carries

ARCHITECTURAL REVIEW

5. 224 Main Street- Repair and replace gutter; Repair and replace portico

Public: None
Motion by P. Van Zant to approve the application as presented
Seconded by D. Bohegian
Vote: 4 ayes, 0 noes, 1 absent (Lauters), motion carries

Liaison to review gutter profile: P. Van Zant

HISTORICAL PLAQUE PROPOSAL

6. Calanan Park- Revised plaque proposal honoring Ellen Sargent

Public: See video record
Motion by D. Bohegian to continue to a future meeting with direction to the applicant to add language that strengthens understanding of Ellen Sargent's role in the suffrage movement
Seconded by P. Van Zant
Vote: 4 ayes, 0 noes, 1 absent (Lauters), motion carries

PUBLIC HEARING

7. ADU Ordinance Update

Public: See video record
Motion by J. Rainey recommending to City Council that Draft Ordinance 2019-XX is Exempt from the California Environmental Quality Act pursuant to CEQA Guidelines Sections 15282(h) ,15303, 15305, and 15061
Seconded by P. Van Zant
Vote: 4 ayes, 0 noes, 1 absent (Lauters), motion carries

Motion by J. Rainey recommending to City Council that they adopt Draft Ordinance 2019-XX to amend Section 17.72.020 through Section 17.72.038, as amended by the Planning Commission, in order to update the City's Ordinance pertaining to Accessory Dwelling Units in compliance with adopted State legislation
Seconded by P. Van Zant
Vote: 4 ayes, 0 noes, 1 absent (Lauters), motion carries

Ordinance Revisions as Recommended by the Planning Commission:

17.72.026 (I.2) Accessory Dwelling units shall not exceed 16-feet in height unless constructed over a garage, in which case the ADU shall not exceed the height of the primary residence or 35-feet

17.72.026 (I.3) Accessory Dwelling Unit Entrances shall be oriented to face the street except that if topographic or other site constraints prevent such orientation, the entrance shall be screened from neighboring properties.

17.72.026 (M) Any ADU taking advantage of reduced setbacks pursuant to Section 17.72.027 shall not have doors or windows within such setback unless required to meet health and safety requirements**.**

17.72.026 (P) A detached ADU may include an attached unconditioned garage space that does not exceed 250 square feet.

17.72.029 (G) Kitchen Requirements: The junior accessory dwelling unit shall include an efficiency kitchen, including a food preparation counter, a cook stove (as opposed to the term "cooking appliances" provided by the State language), and storage cabinets that are of reasonable size in relation to the size of the junior accessory dwelling unit.

8. 211 Broad Street – Sign Variance and National Hotel Exterior Renovation (continue to January 16, 2019)

Public: None
Motion by P. Van Zant to continue until the January 16, 2019 meeting
Seconded by J. Rainey
Vote: 4 ayes, 0 noes, 1 absent (Lauters), motion carries

CANNABIS BUSINESS APPLICATIONS

9. SBGE, Inc, dba Bloomfield - Cannabis Extraction Manufacturing and Distribution Business- Amendment to include a hydrocarbon extraction component

Motion by D. Bohegian to approve the amended application as presented to authorize the addition of hydrocarbon extraction to their authorized application and business operation, subject to the updated Conditions of Approval as amended by the planning commission, making findings a-c
Seconded by P. Van Zant
Vote: 4 ayes, 0 noes, 1 absent (Lauters), motion carries

Added Condition of approval: Operational hours between 8PM to 8AM shall be passive in nature, in terms of operation shall not be visible from an outside observer and shall not involve shipping/receiving activities.

10. Deep Dessert, LLC – Cannabis Infusion Manufacturing and Distribution Business

Public: None
Motion by P. Van Zant to find the project exempt pursuant to CEQA Guidelines Section 15301 (existing facilities) because the building is already existing and the proposed cannabis manufacturing and distribution use is consistent with the principal permitted uses allowed in the Light Industrial Zoning District pursuant to Section 17.48.020, and there is no expansion of use beyond what is already considered a permitted use
Seconded by J. Rainey
Vote: 4 ayes, 0 noes, 1 absent (Lauters), motion carries

To Agenda

Motion by P. Van Zant to approve the application as presented to authorize a cannabis business permit to Deep Desert LLC for a manufacturing and distribution operation at 555 Searls Avenue, suite 4 subject to the recommended Conditions of Approval, attached, as may be modified by the planning commission, making findings "a" and "b":
Seconded by D. Bohegian
Vote: 4 ayes, 0 noes, 1 absent (Lauters), motion carries

11. MMR Books, LLC- Cannabis Hydrocarbon Extraction Manufacturing and Distribution Business

Public: None
Motion by P. Van Zant to find the project exempt pursuant to CEQA Guidelines Section 15301 (existing facilities) because the building is already existing and the proposed cannabis manufacturing and distribution use is consistent with the principal permitted uses allowed in the Light Industrial Zoning District pursuant to Section 17.48.020, and there is no expansion of use beyond what is already considered a permitted use
Seconded by D. Bohegian
Vote: 4 ayes, 0 noes, 1 absent (Lauters), motion carries

Motion by P. Van Zant to approve the application as presented to authorize a cannabis business permit to MMR Books, LLC "MMR" for a manufacturing and distribution operation at 545 Searls Avenue, suite 5 subject to the recommended Conditions of Approval, attached, as may be modified by the planning commission, making findings "a" and "b":
Seconded by D. Bohegian
Vote: 4 ayes, 0 noes, 1 absent (Lauters), motion carries

12. Spoiled Patient Collective, LLC - Cannabis Hydrocarbon Extraction Manufacturing Business

Public: None
Motion by P. Van Zant to find the project exempt pursuant to CEQA Guidelines Section 15301 (existing facilities) because the building is already existing and the proposed cannabis manufacturing and distribution use is consistent with the principal permitted uses allowed in the Light Industrial Zoning District pursuant to Section 17.48.020, and there is no expansion of use beyond what is already considered a permitted use
Seconded by D. Bohegian
Vote: 4 ayes, 0 noes, 1 absent (Lauters), motion carries

Motion by D. Bohegian to approve the application as presented to authorize a cannabis business permit to Spoiled Patient Collective, LLC for a manufacturing operation at 545 Searls Avenue, suite 1 subject to the recommended Conditions of Approval, attached, as may be modified by the planning commission, making findings "a" and "b":
Seconded by P. Van Zant
Vote: 4 ayes, 0 noes, 1 absent (Lauters), motion carries

PLANNING COMMISSION LIAISON REPORTS –Previously approved projects – **informational only**

STAFF APPROVALS AND DETERMINATIONS – (for information only):

To Be Provided at Meeting

CORRESPONDENCE:

To Agenda

ANNOUNCEMENTS:

Next Regular Meeting – January 16, 2020

Happy Holidays!

ADJOURNMENT

Motion by J. Rainey to adjourn at 5:43 p.m.
Seconded by D. Bohegian
4 ayes, 0 noes, 1 absent (Lauters), motion carries

To Agenda

City of Nevada City

TO: Planning Commission

FROM: Amy Wolfson, City Planner

MEETING DATE: January 16, 2020

RE: Crosswalk Design throughout the City

BACKGROUND: Engineering and Public Works Department staff are preparing to install a crosswalk at the intersection of Railroad Avenue and Sacramento Street, as part of pedestrian improvement plans being implemented city-wide. Because crosswalks are often prominently visible, they have the potential for impacting the overall City aesthetics. Staff is seeking the Planning Commission's direction on material and design options so that these improvements maintain a consistent aesthetic throughout the City, and are compatible with the City's design goals, particularly in the Historic District. Attached to this staff report are several examples of crosswalk styles for the Commission's consideration.

REQUESTED ACTION: Proved direction to Engineering and Public Works staff on appropriate an appropriate crosswalk design to use throughout the City.

To Agenda

NEVADA CITY
EAST BROAD
STREET

OLD DOWNTOWN
SACRAMENTO

CITRUS HEIGHTS

OLD DOWNTOWN
SACRAMENTO

ROSEVILLE

DOWNTOWN

Riley St
OLD DOWNTOWN
FOLSOM

DOWNTOWN
TRUCKEE

OLD DOWNTOWN
FOLSOM

DOWNTOWN
PLACERVILLE

DOWNTOWN
PLACERVILLE

GRASS VALLEY

Old Town Folsom

GRASS VALLEY

To Agenda

City of Nevada City

TO: Planning Commission

FROM: Amy Wolfson, City Planner

MEETING DATE: February 20, 2020

APPLICANT: Ariel Wolansky, business owner

RE: Application for Sign Review at 419 Broad Street for a sign for "Cocoa Café"

ATTACHMENTS:
1. Prior application
2. Sign Graphic

ACTION REQUESTED
1. Approve a new hanging sign for "Cocoa Cafe"

PROKECT PROPOSAL: Business owner, Ariel Wolansky is applying to modify his previously approved sign (July 18, 2019 meeting) and replace it with a new sign of the same dimensions and in the same location. The existing sign currently hangs from existing eyelets between posts on an existing sign stand, detached from the building and located in the front yard.

Wall sign details:

Sign Material	hand painted, aluminum composite panel
Sides	Two-Sided
Dimensions/Area	3' x 0.77' (both sides: 4.62 square feet)
Letters	Similar to "Times New Roman"
Graphic	Botanical
Colors	Black background, tan lettering, green/brown/cream graphic

Prior sign approvals

Current Sign Proposal

REGULATORY CONSIDERATION:
17.68.080- Signs—Requirements and Restrictions (in the Historical District)
No sign shall be placed, erected, altered or relocated on any property within the historical district unless such sign is, as to its exterior appearance, compatible with the Mother Lode type of architecture, and unless it complies with all of the following requirements:

- No sign shall be allowed except a sign, which identifies or advertises the business conducted on the premises.
- Each sign shall be affixed to a building, except that where the building is set back from the street to such extent that a sign affixed to the building would not be within reasonable view from the street, then a sign need not be so affixed, but may be located in some other manner as the planning commission shall approve.
- No single sign shall exceed twenty-four square feet in area
- The aggregate area of all signs of any one business entity shall not exceed twenty-four square feet; provided, however, that a single business entity having public customer entrances on two or more sides of a building may treat each such side as a separate entity.

FINDINGS: In order to approve this application, the following finding must be made:

A. That the exterior appearance of the proposed signage is consistent with the Mother Lode type of architecture (17.68.080).

PLANNING COMMISSION ACTION:
After discussion and hearing from the public, the Commission can make a motion to approve the sign application, with the following conditions as agreed to by the applicant:

1. No neon is permitted.

2. No banners are permitted.

3. Nevada City contracts with the Nevada County Building Department for issuance of permits. The County will not issue permits unless the plans have been stamped and approved by Nevada City. Therefore, prior to issuance of a building permit, submit three sets of plans to Nevada City Planning Department, along with the filing fee applicable at the time of filing. The plans will be reviewed by the City Planner and City Engineer for consistency with the approval and will require their signatures.

4. All improvements shall substantially comply with the exhibits presented to the Planning Commission.

5. A Planning Commission member may be appointed as a Liaison to assist the applicant with any minor modifications to the permit, if needed.

6. The decision of the planning commission may be appealed to the city council not later than fifteen (15) days after this final action or decision. Any work during this period is at the applicant's own risk.

OFFICE USE ONLY
Filing Fees
Chk Cash
Bus. Lic.

CITY OF NEVADA CITY

317 Broad Street • Nevada City, California 95959 • (530) 265-2496

APPLICATION FOR HISTORICAL DISTRICT SIGN

Applicant

ARIEL WOLANSKY
Name

229 HUGHES RD
Address

GRASS VALLEY CA 95945
City, State

510-200-1884
Phone

CARLA
***Owner's name** if different from above*

ARIEL@CHOQUIEROCHOCOLATE.COM

Check all that apply:

- ☐ Erect a new sign
- ☐ Alter an existing sign
- ☐ Relocate a sign

Supporting data must be attached for new signs & alterations:

- *Colored rendering of proposed sign*
- *Color chips*
- *Material specs*

Address of property where sign is proposed: 419 BROAD NEVADA CITY

NAME OF BUSINESS CHOQUIERO CHOCOLATE

SIZE: DIMENSIONS OF SIGN: SAME AS LULU'S Total Square Footage: _____
Double Sided? (Yes) (No) (Both sides are counted)
If irregular in shape, providing sketch indicating the area of the smallest rectangle which can wholly contain the sign and provide dimensions. See example provided on Sign Application Checklist.

LOCATION Please indicate proposed location on building: (Also provide photograph indicating location)

_____

Materials of sign _____

Colors (list name and number if taken from Benjamin Moore Historical Palette) List colors for letters, background, graphics, accents, etc.)

_____ _____
_____ _____
_____

Lettering Style, Name: _____
Provide description of chosen lettering style and how it complies with the Mother Lode Era style of architecture _____

_____

How many business entrances are there on the building? _____ How many businesses now occupy the building? ____

CODE COMPLIANCE:
APPLICANT UNDERSTANDS AND AGREES TO THE FOLLOWING: (Please check the following boxes to indicate the applicant understands and acknowledges the Historical District Sign Standards) By signing the following, the applicant agrees to adhere to these standards and any deviation will result in code enforcement procedures from the City, which could result in a fine and/or revocation of the sign approval.

( ) No sign shall contain any flashing, blinking or moving letters. (Municipal Code Section 17.68.080H)
( ) Sandwich board signs or A-board signs shall not be allowed. (Section 17.68.080J)
( ) Neon signs designed to be seen from the outside of the building are prohibited. (Section 17.68.080K)
( ) Banners and Flags are not permitted to hang from buildings (Municipal Code Section 8.04.020D)

I am the owner or authorized agent for the subject property.

Signature _____ *Date* 7/9/19

To Age

CACAO CAFE

BY CHOQUIERO CHOCOLATE

DRINKS • DESSERTS • GIFTS

CACAO CAFE

BY
CHOQUIERO

City of Nevada City

TO: Planning Commission

FROM: Amy Wolfson, City Planner

MEETING DATE: February 20, 2020

RE: Tree Removal Application – 319 Nevada Street

ATTACHMENTS:
1. Application
2. Tree Removal Site Plan and tree location map
3. Photos

APPLICATION: Property owner Ethan Gicker, at 319 Nevada Street, is requesting removal of 11 incense cedars and two ponderosa pines for a total of 13 trees of various size on his 0.44 acre property. Reasons for removal are primarily for forest thinning and/or poor growth structure.

MITGATION CONSIDERATION: Pursuant to Section 18.01.070 of the City Municipal Code, the Planning Commission may impose mitigation on the loss of any protected tree(s). The total replacement requirement shall be based on the number of tree(s) removed. Mitigation replanting or seedling protection shall be provided with the intent to reflect the character of the site prior to tree removal.

ENVIRONMENTAL CONSIDERATION: This project may be considered exempt from environmental review pursuant to the California Environmental Quality Act (CEQA) Guidelines Section 15304 (Minor Alterations to Lands) for small projects that do not involve the removal of healthy, mature, and scenic trees, except for forestry and agricultural purposes.

RECOMMENDED MOTION

1. In approving the Tree Removal application, as conditioned, located at 319 Nevada Street, Nevada City, CA, the Planning Commission finds:

    a. That the removal of up to 13 trees identified in the exhibits provided by the applicant are necessary for reasonable use of the property

RECOMMENDED CONDITIONS OF APPROVAL

1. The approval for the tree removal shall expire 180-days from the issuance of the permit.

2. It is the applicant's responsibility to obtain any necessary permits from applicable agencies that may include the CA Department of Fish and Wildlife, US Federal Emergency Management Agency (FEMA), CA Department of Forestry and Fire Protection (CDF)

3. Any tree work shall avoid impacts to nesting birds under the federal Migratory Bird Treaty Act

4. Any firm or person removing the trees shall obtain a business license from City Hall

To Agenda

Filing Fees	
Chk	Cash
Bus. Li e.	

CITY OF NEVADA CITY

317 Broad Street • Nevada City, California 95959 • (530) 265-2496

CITY OF NEVADA CITY RECEIVED JAN 13 2020 RCPT. AMT.

TREE REMOVAL APPLICATION

A City permit is required for removal of any tree with a cumulative diameter at breast height (cbdh) of 4" or greater (Mandrone, Manzanita, Oak); or 6" or greater (all other trees). An arborist's report may also be required. See Ordinance 2004-09 (City Code, Ch 18) for criteria.

NOTE: A $100 administrative fee must be paid when the application is submitted. All applications must include photographs of the tree(s) to be removed and a site plan showing the location of all trees to be removed and approximate locations of any roads and structures.

Street Address/Location 319 Nevada st APN #: 005-380-003-000

Owner/Representative: Ethan Gicker Phone #: 530-277-3676

Mailing Address: 14153 Lily Creek Trail Nevada City CA 95959

Email Address: ethan.gicker@gmail.com

Company performing tree work

Identify and describe tree(s) to be removed and state reason(s). Use additional pages if necessary.

Number	Diameter	Species	Reason for removal (See§ 18.01.035)
1	20"	Calocedrus decurrens	overstocked / Poor live canopy Ratio
2	24.3"		
3	24.2"		
4	19.5"		
5	18"		
6	18.6"		
7	21.3"		
8	24.5"	Pinus Ponderosa	Poor structure co-dominate leaders
9	14.3"	Calocedrus decurrens	overstocked / low vigor
10	16"		
11	21"		

Property Owner's Signature: [signature] Date: 1-13-2020

********** *Office Use Only* **********

Permit Date: Expiration Date: Remarks

(Mitigation/Protection Measures):

Approved by:

Name/Title	Date	Name/Title	Date

J/Forms/Planning/Tree Removal Application-Revised 7/20/07

To Age

12	21"	Calocedrus decurrens	over stocked Poor vigor
13	27.8"	pinus Ponderosa	↓

To Age

← 144' →
23.6"
96'
20"
93
R1
24.3"
98
R2
24.2
112
R3
17"
110
22.1"
108
19"
97
22.5
113'
1
19.5
96'
R4
18
98
R5
18.6
105
R6
22
97'
22.6
81'
25.2
80'
R7
21.3
94'
R8
24.5
103
14"
R9
14.3"
65'
R13
27.8
105'
R10
16"
72'
DW
4'.
116'
128'
B Street
90'
34"
97'
66.1"
OK
R11
21" est.
72'
R12
21" est
77'
5"
GE
6"
JM
House
319
78.5'
24.1"
50'
18"
CA
23'
16"
23'
18.6"
23'
24"
29'
21"
30'
27.6"
Power Pole
Power Pole
Nevada ST
← 163' →

View to North

View to west

B Street

U.S. Fish & Wildlife Service

Pacific Southwest Region

California, Nevada and Klamath Basin

Migratory Bird Treaty Act

- Was enacted to put an end to the commercial trade of birds and their feathers.
- Prohibits killing, possessing, or trading migratory birds.
- Applies to whole birds, parts of birds, bird nests and eggs.
- Applies to many common bird species and private, state and federal lands.
- Does not provide protection of habitat of migratory birds, but does prohibit the destruction of active bird nests in active use without a permit from U.S. Fish and Wildlife Service.
- It is easiest to avoid active nests by working during the non-breeding season. This means avoiding vegetation removal between March 1 and August 31
- If you want to work during the nesting season, you should hire a biologist to survey for nesting birds and mark sites to be avoided during vegetation removal. Leave a buffer of vegetation around each nest to avoid nest abandonment.

More than 800 migratory birds are listed under the Migratory Bird Treaty Act. The Eagle Protection Act also protects bald and golden eagles.

Mourning Dove

Tri-Colored Blackbird

U.S. Fish and Wildlife Service Jurisdiction

Birds protected under the act include all common songbirds, waterfowl, shorebirds, hawks, owls, eagles, ravens, crows, native doves and pigeons, swifts, martins, swallows and others, including their body parts (feathers, plumes etc), nests, and eggs. A complete list of protected species is found at 50 CFR 10.13. Activities related to fire management which are most likely to result in take of migratory birds include, but are not limited to, clearing or grubbing, tree pruning or limbing, prescribed burning, and vegetation removal in migratory bird nesting habitat during the nesting season when eggs or young are likely to be present. Section 7031 of the MBTA prohibits taking any migratory bird, part, nest or eggs. Take is defined as “to pursue, hunt, shoot, wound, kill, trap, capture, or collect, or any attempt to carry out these activities.” A take does not include habitat destruction or alteration, as long as there is not a direct taking of birds, nests, eggs, or parts thereof.

Who Do I Contact?

USFWS: Sacramento office 916-445-0411 http://www.fws.gov

To Agenda

City of Nevada City

TO: Planning Commission

FROM: Amy Wolfson, City Planner

MEETING DATE: February 20, 2020

RE: Tree Removal Application – 630 East Broad Street

ATTACHMENTS:
1. Application
2. Applicant Narrative
3. Photos

APPLICATION: Property owner Greg Archbald, at 630 East Broad Street, is requesting removal of six Aspen trees all under 9 inches diameter his 0.20 acre property. Reasons for removal are primarily because trees are showing signs of disease and poor health.

MITGATION CONSIDERATION: Pursuant to Section 18.01.070 of the City Municipal Code, the Planning Commission may impose mitigation on the loss of any protected tree(s). The total replacement requirement shall be based on the number of tree(s) removed. Mitigation replanting or seedling protection shall be provided with the intent to reflect the character of the site prior to tree removal.

ENVIRONMENTAL CONSIDERATION: This project may be considered exempt from environmental review pursuant to the California Environmental Quality Act (CEQA) Guidelines Section 15304 (Minor Alterations to Lands) for small projects that do not involve the removal of healthy, mature, and scenic trees, except for forestry and agricultural purposes.

RECOMMENDED MOTION

1. In approving the Tree Removal application, as conditioned, located at 630 East Broad Street, Nevada City, CA, the Planning Commission finds:

    a. That the removal of up to six trees identified in the exhibits provided by the applicant are necessary for reasonable use of the property

RECOMMENDED CONDITIONS OF APPROVAL

1. The approval for the tree removal shall expire 180-days from the issuance of the permit.

2. It is the applicant's responsibility to obtain any necessary permits from applicable agencies that may include the CA Department of Fish and Wildlife, US Federal Emergency Management Agency (FEMA), CA Department of Forestry and Fire Protection (CDF)

3. Any tree work shall avoid impacts to nesting birds under the federal Migratory Bird Treaty Act

4. Any firm or person removing the trees shall obtain a business license from City Hall

To Agenda

OFFICE USE ONLY	
Filing Fees	
Chk	Cash
Bus. Lic.	

CITY OF NEVADA CITY

317 Broad Street • Nevada City, California 95959 • (530) 265-2496

TREE REMOVAL APPLICATION

A City permit is required for removal of any tree with a cumulative diameter at breast height (cbdh) of 4" or greater (Mandrone, Manzanita, Oak); or 6" or greater (all other trees). An arborist's report may also be required. See Ordinance 2004-09 (City Code, Ch 18) for criteria.

NOTE: A $100 administrative fee must be paid when the application is submitted. All applications must include photographs of the tree(s) to be removed and a site plan showing the location of all trees to be removed and approximate locations of any roads and structures.

Street Address/Location: 630 E Broad Street APN #: 005-075-010

Owner/Representative: Greg Archbald Phone #: 530-559-8958

Mailing Address: (same)

Identify and describe tree(s) to be removed and state reason(s). Use additional pages if necessary.

Number	Diameter	Species	Reason for removal (See § 18.01.035)
1	6 1/4"	Aspen	Diseased
2	5 1/2"	"	Dead
3	5 1/2"	"	Diseased
4	6 1/2"	"	Diseased
5	6 3/4"	"	Diseased
6	9"	"	Likely diseased

Property Owner's Signature: Greg Archbald Date: 1/31/20

---------- *OFFICE USE ONLY* ----------

Permit Date: _____ Expiration Date: _____

Remarks (Mitigation/Protection Measures): _____

Approved by:

_____ _____
Signature Date

_____ _____
Signature Date

J/Forms/Planning/Tree Removal Application – Revised 7/20/07

To Agenda

Amy Wolfson

From: Greg Archbald <greg_archbald@hotmail.com>
Sent: Friday, January 31, 2020 5:49 PM
To: Amy Wolfson
Subject: Tree Removal Application - home
Attachments: Archbald-Tree-Removal-Appl.pdf; Street View-Tree numbers go R to L.jpg; Plan View-12-28-17.jpg; L-to-R-Trees 1-2.jpg; L-toR-Trees 3-4-5.jpg; Tree 6.jpg; Tree 2 Dead at Base.jpg

Amy,

At the suggestion of the receptionist on duty this afternoon, I am emailing you the attached Tree Removal Application and supporting documents. This is for the home at 630 E Broad Street where my wife, Connie Parsons, and I live.

The application requests permission to remove one dead and five diseased aspen trees, located in two planting beds in our front yard. These trees were all healthy when we moved in about 15 years ago but, after the drought year (was it 2015-16?) when we didn't water our lawn, they began to decline. Branches at the tops of all six trees died. All were in obvious decline. In May of 2017, on the advice of consulting arborist Randall Frizzell, I had all six aspen topped in the hope that this would stimulate new and healthy branching at the top. Topping the trees also removed unsightly dead branches. Unfortunately, the strategy did not work. There has been no top-sprouting. Now, one aspen (#2) is completely dead and all have dead branches at the top and some darkening of the bark indicating some kind of disease or slow death process. Only #6 still looks fairly healthy but it too has dead branches. Since it is cut off at the top it would be very unsightly to leave it as one, odd, surviving topped tree in our front yard. We need to remove them all.

The receptionist suggested that it might be possible to waive the application fee in the case of diseased or dead trees. Please advise me if you require a fee and I will bring a check to your office.

Thank you,

Greg

Greg Archbald & Connie Parsons
630 E Broad Street
Nevada City, CA 95959
Greg's cell phone: 5360-559-8958

To Agen

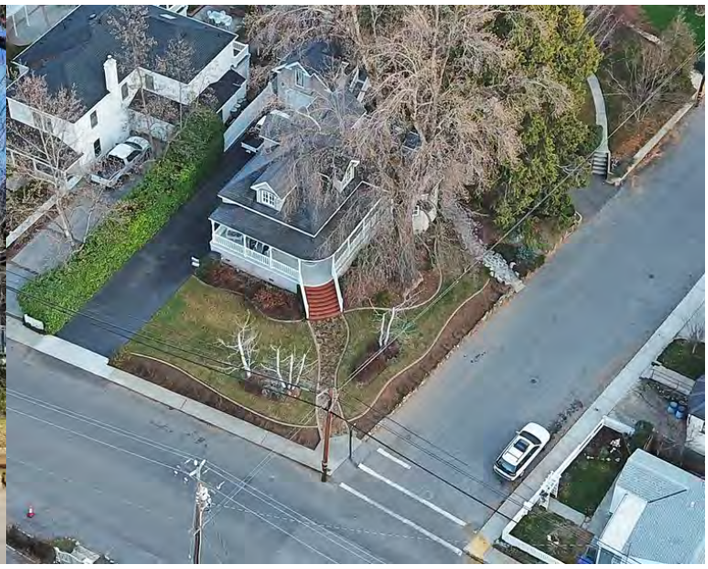

To Agenda

Migratory Bird Treaty Act

- Was enacted to put an end to the commercial trade of birds and their feathers.
- Prohibits killing, possessing, or trading migratory birds.
- Applies to whole birds, parts of birds, bird nests and eggs.
- Applies to many common bird species and private, state and federal lands.
- Does not provide protection of habitat of migratory birds, but does prohibit the destruction of active bird nests in active use without a permit from U.S. Fish and Wildlife Service.
- It is easiest to avoid active nests by working during the non-breeding season. This means avoiding vegetation removal between March 1 and August 31
- If you want to work during the nesting season, you should hire a biologist to survey for nesting birds and mark sites to be avoided during vegetation removal. Leave a buffer of vegetation around each nest to avoid nest abandonment.

More than 800 migratory birds are listed under the Migratory Bird Treaty Act. The Eagle Protection Act also protects bald and golden eagles.

Mourning Dove

Tri-Colored Blackbird

U.S. Fish and Wildlife Service Jurisdiction

Birds protected under the act include all common songbirds, waterfowl, shorebirds, hawks, owls, eagles, ravens, crows, native doves and pigeons, swifts, martins, swallows and others, including their body parts (feathers, plumes etc), nests, and eggs. A complete list of protected species is found at 50 CFR 10.13. Activities related to fire management which are most likely to result in take of migratory birds include, but are not limited to, clearing or grubbing, tree pruning or limbing, prescribed burning, and vegetation removal in migratory bird nesting habitat during the nesting season when eggs or young are likely to be present. Section 7031 of the MBTA prohibits taking any migratory bird, part, nest or eggs. Take is defined as “to pursue, hunt, shoot, wound, kill, trap, capture, or collect, or any attempt to carry out these activities.” A take does not include habitat destruction or alteration, as long as there is not a direct taking of birds, nests, eggs, or parts thereof.

Who Do I Contact?

USFWS: Sacramento office 916-445-0411 http://www.fws.gov

To Agenda

City of Nevada City

TO: Planning Commission

FROM: Amy Wolfson, City Planner

MEETING DATE: February 20, 2020

RE: Tree Removal Application – 403 South Pine

ATTACHMENTS:
1. Application
2. Tree location Map
3. Photos

APPLICATION: Property owners Gretchen Bond and Mark Jacoby, at 403 South Pine Street, are requesting removal of two Willow, one Cedar and one Walnut for a total of four trees between 18 and 30 inches diameter (application appears to reference circumference) on their 0.10 acre property. Reasons for removal are primarily because trees are damaging or in danger of damaging property. Photographs also show significant ivy growth. Based on it's size/age, staff believes the Walnut to be a Felix Gillet tree, having "additional protection" as outlined below.

MITGATION CONSIDERATION: Pursuant to Section 18.01.070 of the City Municipal Code, the Planning Commission may impose mitigation on the loss of any protected tree(s). The total replacement requirement shall be based on the number of tree(s) removed. Mitigation replanting or seedling protection shall be provided with the intent to reflect the character of the site prior to tree removal.

Pursuant to Section 18.01.036 additional protection may consist of, but is not limited to, one (1) or more of the following:

- Modifications to existing structures, such as porches/decks or similar improvements;
- Pruning/trimming;
- Spraying for insects and disease;
- Special care and feeding;
- Method of tree removal.

ENVIRONMENTAL CONSIDERATION: This project may be considered exempt from environmental review pursuant to the California Environmental Quality Act (CEQA) Guidelines Section 15304 (Minor Alterations to Lands) for small projects that do not involve the removal of healthy, mature, and scenic trees, except for forestry and agricultural purposes.

RECOMMENDED MOTION

1. In <u>approving</u> the Tree Removal application, as conditioned, located at 403 South Pine Street, Nevada City, CA, the Planning Commission finds:

    a. That the removal of up to four trees identified in the exhibits provided by the applicant <u>are</u> necessary for reasonable use of the property

To Agenda

RECOMMENDED CONDITIONS OF APPROVAL

1. The approval for the tree removal shall expire 180-days from the issuance of the permit.

2. It is the applicant's responsibility to obtain any necessary permits from applicable agencies that may include the CA Department of Fish and Wildlife, US Federal Emergency Management Agency (FEMA), CA Department of Forestry and Fire Protection (CDF)

3. Any tree work shall avoid impacts to nesting birds under the federal Migratory Bird Treaty Act

4. Any firm or person removing the trees shall obtain a business license from City Hall

Office Use Only	
Filing Fees	
Chk	Cash
Bus. Li e.	

CITY OF NEVADA CITY
PAID
FEB 06 2020
RCPT. AMT.

CITY OF NEVADA CITY

317 Broad Street • Nevada City, California 95959 • (530) 265-2496

TREE REMOVAL APPLICATION

A City permit is required for removal of any tree with a cumulative diameter at breast height (cbdh) of 4" or greater (Mandrone, Manzanita, Oak); or 6" or greater (all other trees). An arborist's report may also be required. See Ordinance 2004-09 (City Code, Ch 18) for criteria.

NOTE: A $100 administrative fee must be paid when the application is submitted. All applications must include photographs of the tree(s) to be removed and a site plan showing the location of all trees to be removed and approximate locations of any roads and structures.

Street Address/Location 403 S Pine St APN #: 005-180-039

Owner/Representative: Gretchen H Bond & Mark E Jacoby Phone #: (530) 277-8999

Mailing Address: 11334 Via Vista Nevada City CA

Email Address: gbond49@gmail.com

Company performing tree work Timber Pros

Identify and describe tree(s) to be removed and state reason(s). Use additional pages if necessary.

Number		Diameter	Species	Reason for removal (See§ 18.01.035)
1	21.3	67 in	Walnut	damaging retaining wall and sidewalk
2	23.5	74 in	Cedar	
3	29.9	94 in	Willow	leaning over house and a large piece damaged roof
4	18.8	59 in	Willow	also leaning and a large piece fell on back fence - willows are hanging over neighbors -
	(tape measure)			

Property Owner's Signature: Date: 6 Feb 20

********** *Office Use Only* **********

Permit Date: Expiration Date: Remarks

(Mitigation/Protection Measures):

Approved by:

Name/Title	Date	Name/Title	Date

J/Forms/Planning/Tree Removal Application-Revised 7/20/07

Agenda

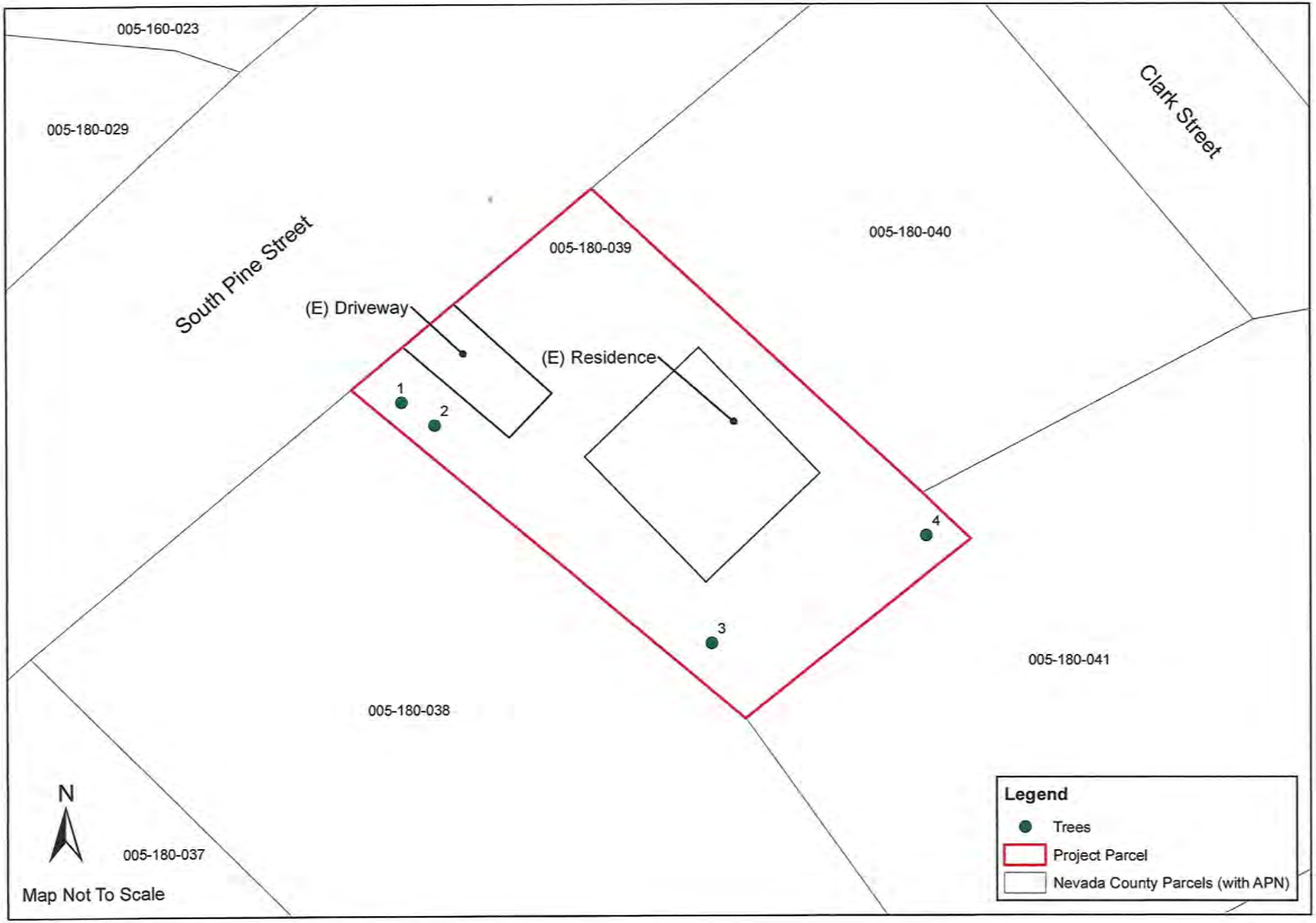

403 Pine Street

APN: 005-180-039

Site Map
Tree Removal Permit
2/6/2020

Agenda

#1

#1

#2

Agenda

#3

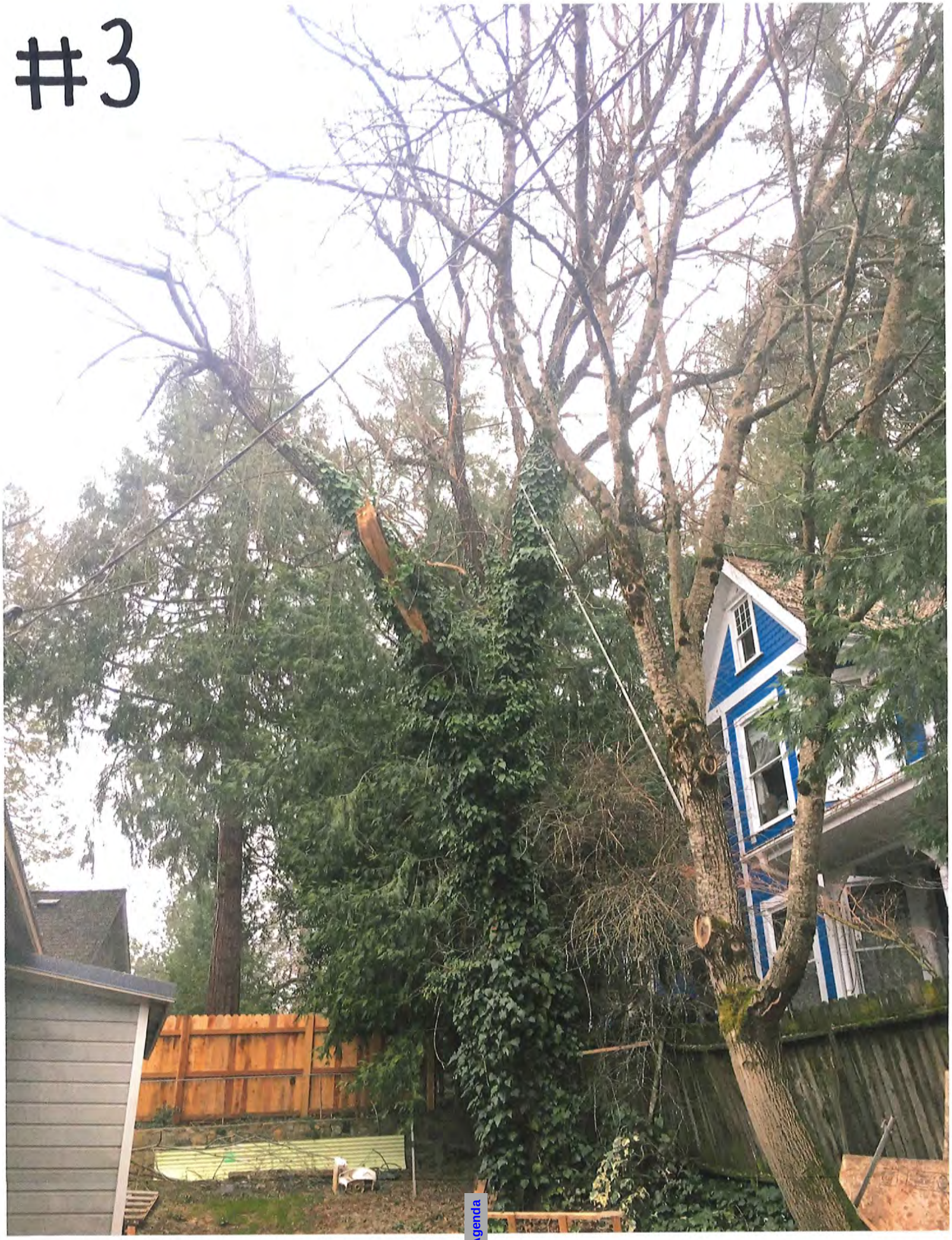

#3

#4

Migratory Bird Treaty Act

- Was enacted to put an end to the commercial trade of birds and their feathers.
- Prohibits killing, possessing, or trading migratory birds.
- Applies to whole birds, parts of birds, bird nests and eggs.
- Applies to many common bird species and private, state and federal lands.
- Does not provide protection of habitat of migratory birds, but does prohibit the destruction of active bird nests in active use without a permit from U.S. Fish and Wildlife Service.
- It is easiest to avoid active nests by working during the non-breeding season. This means avoiding vegetation removal between March 1 and August 31
- If you want to work during the nesting season, you should hire a biologist to survey for nesting birds and mark sites to be avoided during vegetation removal. Leave a buffer of vegetation around each nest to avoid nest abandonment.

More than 800 migratory birds are listed under the Migratory Bird Treaty Act. The Eagle Protection Act also protects bald and golden eagles.

Mourning Dove

Tri-Colored Blackbird

U.S. Fish and Wildlife Service Jurisdiction

Birds protected under the act include all common songbirds, waterfowl, shorebirds, hawks, owls, eagles, ravens, crows, native doves and pigeons, swifts, martins, swallows and others, including their body parts (feathers, plumes etc), nests, and eggs. A complete list of protected species is found at 50 CFR 10.13. Activities related to fire management which are most likely to result in take of migratory birds include, but are not limited to, clearing or grubbing, tree pruning or limbing, prescribed burning, and vegetation removal in migratory bird nesting habitat during the nesting season when eggs or young are likely to be present. Section 7031 of the MBTA prohibits taking any migratory bird, part, nest or eggs. Take is defined as “to pursue, hunt, shoot, wound, kill, trap, capture, or collect, or any attempt to carry out these activities.” A take does not include habitat destruction or alteration, as long as there is not a direct taking of birds, nests, eggs, or parts thereof.

Who Do I Contact?

USFWS: Sacramento office 916-445-0411 http://www.fws.gov

To Agenda

City of Nevada City

TO: Planning Commission

FROM: Amy Wolfson, City Planner

MEETING DATE: February 20, 2020

RE: Tree Removal Application – 514 Nursery Street

ATTACHMENTS:
1. Application
2. Acton Arboriculture Assessment
3. Photos

APPLICATION: Property owner Crystal Helbig, 514 Nursery Street, is requesting removal of five ponderosa Pines and two Hawthorns for a total of seven trees, of various sizes on her 0.82 acre property. Reasons for removal are due to fire risk, risk of tree failure, and risk to the home. Acton Arboriculture has provided an assessment of several trees on the property, including those proposed for removal, attached. A Ponderosa Pine was approved for removal

MITGATION CONSIDERATION: Pursuant to Section 18.01.070 of the City Municipal Code, the Planning Commission may impose mitigation on the loss of any protected tree(s). The total replacement requirement shall be based on the number of tree(s) removed. Mitigation replanting or seedling protection shall be provided with the intent to reflect the character of the site prior to tree removal.

ENVIRONMENTAL CONSIDERATION: This project may be considered exempt from environmental review pursuant to the California Environmental Quality Act (CEQA) Guidelines Section 15304 (Minor Alterations to Lands) for small projects that do not involve the removal of healthy, mature, and scenic trees, except for forestry and agricultural purposes.

RECOMMENDED MOTION

1. In approving the Tree Removal application, as conditioned, located at 514 Nursery Street, Nevada City, CA, the Planning Commission finds:

    a. That the removal of up to six trees identified in the exhibits provided by the applicant are necessary for reasonable use of the property

RECOMMENDED CONDITIONS OF APPROVAL

1. The approval for the tree removal shall expire 180-days from the issuance of the permit.

2. It is the applicant's responsibility to obtain any necessary permits from applicable agencies that may include the CA Department of Fish and Wildlife, US Federal Emergency Management Agency (FEMA), CA Department of Forestry and Fire Protection (CDF)

3. Any tree work shall avoid impacts to nesting birds under the federal Migratory Bird Treaty Act

4. Any firm or person removing the trees shall obtain a business license from City Hall

To Agenda

RECEIVED
FEB 11 2020
CITY OF NEVADA CITY

CITY OF NEVADA CITY
FEB 11 2020
RCPT. AMT.

Office Use Only
Filing Fees
Chk. Cash
Bus. Lic

CITY OF NEVADA CITY

317 Broad Street • Nevada City, California 95959 • (530) 265-2496

TREE REMOVAL APPLICATION

A City permit is required for removal of any tree with a cumulative diameter at breast height (cbdh) of 4" or greater (Mandrone, Manzanita, Oak); or 6" or greater (all other trees). An arborist's report may also be required. See Ordinance 2004-09 (City Code, Ch 18) for criteria.

NOTE: A $100 administrative fee must be paid when the application is submitted. All applications must include photographs of the tree(s) to be removed and a site plan showing the location of all trees to be removed and approximate locations of any roads and structures.

Street Address/Location 514 Nursery Street APN #:

Owner/Representative: Crystal Helbig Phone #: 510-965-3488

Mailing Address: 514 Nursery Street Nevada City, 95959

Email Address: ayeala@gmail.com

Company performing tree work Acton Arboriculture

Identify and describe tree(s) to be removed and state reason(s). Use additional pages if necessary.

Number	Diameter	Species	Reason for removal (See§ 18.01.035)
1	51"	Ponderosa	...tree failure at root system probable in 3 years
1	29"	Ponderosa	high risk of failure, please see attached risk assessment.
~~2~~			
2		Hawthorn	fire abatement, see assessment.
3	30", 24", 23"	Ponderosa	High Risk to Home, see assessment

Property Owner's Signature: [signature] Date: 02/11/2020

********** *Office Use Only* **********

Permit Date: Expiration Date: Remarks

(Mitigation/Protection Measures):

Approved by:

Name/Title	Date	Name/Title	Date

J/Forms/Planning/Tree Removal Application-Revised 7/20/07

Agenda

Acton
Arboriculture

Date: 1/29/20

To: Crystal Beck
514 Nursery Street
Nevada City, CA 95959

Dear Crystal,

On December 27, 2019 you invited me out to perform basic tree inspections on the trees around your home that you are considering taking down and pruning. My assignment was to evaluate the health, structure, and risks associated with these trees and provide a letter with my findings. I had been out previously on July 30, 2019 to provide a quote for the work you are considering. I sent you a contract, dated July 30, 2019, and will refer to that contract throughout this letter.

The industry standard for tree risk assessment is to assign a tree one of four levels of risk; low, moderate, high, and extreme. This is based on the perceived likelihood of tree failure for a tree part, the likelihood of impact for a specific target, and the consequences. A time frame for the assessment is given, along with mitigation options and residual risks. The assessment is based on expected storm conditions. At this site, it is possible to see high wind gusts, significant snow accumulation, and heavy rain on an annual basis.

The first subject on the contract is a "Listing Ponderosa Pine", back right of the home. It measured 51 inches in diameter at breast height (DBH) and was in fair health with poor structure. The trees listing stem was an indication of previous and potentially continued instability and applies very significant leverage on the root system. Unfortunately, there is no reasonable way to evaluate the root system to determine if it is structurally sufficient to withstand the forces applied. However, the listing stem is both an indication that the tree is struggling to withstand the forces being applied and a foreshadowing that forces will increase with stem deflection. For these reasons, I estimated that whole tree failure at the root system was probable within three years. If failure were to occur, it would

P.O. Box 17 Grass Valley, CA 95945 | Phone 530.272.8224 | Fax 530.272.8224
actonarboriculture@gmail.com | www.zenoacton.com

Agenda

have a high likelihood of striking the home. The consequences of impact would be severe. Therefore, it is my opinion that this tree poses a high risk. I do not believe there are any mitigation actions, such as pruning or installing a tree support system, that are reasonable, and would both maintain tree health and significantly reduce risk. If a high risk cannot be tolerated, taking the tree down is the most reasonable action. Tree removal would require a permit from Nevada City.

The second subject on the contract is a "Slender Ponderosa Pine", directly behind the home. It measured 29 inches in DBH and was in fair health but had poor structure. I estimated that this tree's slender, sweeping top, had a probable likelihood of failure over a three-year time frame. If failure were to occur, it would have a high likelihood of striking the home with severe consequences. Therefore, it is my opinion that this tree poses a high risk. I do not believe there are any mitigation actions that are reasonable and would both maintain tree health and significantly reduce risk. If a high risk cannot be tolerated, taking the tree down is the most reasonable action. Tree removal would require a permit from Nevada City.

The third and fourth subjects on the contract are "Incense Cedar(s)" at the back, right corner of the garage and behind the garage. Both trees are in good health and have good structure. I have provided a quote to prune these trees to maintain sufficient clearance off of the building and above the ground in the event of a wildfire. Such pruning is required for fire safety under California Public Resources Code 4291. I have also provided a quote to remove the ivy from the tree at the back, right corner of the garage. This ivy does not pose a significant risk to tree structure or the propagation of fire. However, ivy is a highly competitive vine that threatens the long-term health of the tree.

The fifth subject is a "Ponderosa Pine" that stood back right of the garage. It was in fair health and had fair structure. I have provided a quote to prune the lower dead branches off of the tree, up to a height where live branches are present, and a quote to remove the ivy. The dead branches have an imminent likelihood of failure. This trees canopy is over the back yard and occasionally there are children and adults within the drop zone. The likelihood of a dead limb striking a human is low yet the consequences could be severe. Therefore, these dead branches pose a moderate risk. If these dead branches were to be removed, the residual risk associated with dead branches would be low. The ivy does not pose a significant risk to tree structure or the propagation of fire. However, its removal from the tree would help maintain good health in the long term. It should also be noted that this tree has a lean and though it poses a low risk to the structures on the property, it may pose an elevated risk to the structures on neighboring properties.

Agenda

The sixth subject is a group of "5 Ponderosa & 4 Cedars" back, behind the home. I have provided a quote to prune the lower dead branches off of these trees, up to a height where live branches are present. These dead branches have an imminent likelihood of failure. The likelihood of a dead branch striking a human is low yet the consequences could be severe. Therefore, these dead branches pose a moderate risk. In addition, many of these limbs are within 15 feet of the ground and should be pruned off to reduce the risk of a surface fire entering the crowns. If these dead branches were to be removed, the residual risk associated with dead branches would be low.

The seventh subject is "2 Hawthorn & 1 Chestnut". These understory trees are within 100 feet of the home, in front of a large chestnut. I have provided a quote to take these three trees down. This would create separation between surface fuels and the crown of the chestnut. This kind of work is required under California Public Resources code 4291. These removals would require permits from Nevada City.

The eighth subject is "Ponderosa Pines x 3". These three trees stand left of the home and have DBH's of 30, 24, and 23 inches. Each is in fair health and each has poor structure. I have provided a quote to take these trees down. All three are slender with corrected sweeps that are listing towards the home. I estimated that whole tree failure was probable given a three-year time frame. If failure were to occur, each tree has a high likelihood of striking the home with severe consequences. In my opinion, these trees pose a high risk to the home. I do not believe there are any mitigation actions, such as pruning or installing a tree support system, that are reasonable, and would both maintain tree health and significantly reduce risk. If a high risk cannot be tolerated, taking the tree down is the most reasonable action. Tree removals would require permits from Nevada City.

The ninth and final subject is a "Large Ponderosa Pine", at or near three property corners. This tree had a DBH of approximately 60 inches. This tree was in fair health and had fair structure. I have provided a quote to take this tree down. The tree has good diameter for its height but does have a corrected sweep with weight towards the home. Unfortunately, there is no reasonable way to evaluate the root system to determine if it is structurally sufficient to withstand the forces that are applied under heavy storm conditions. I estimated that whole tree failure was possible within a three-year time frame. If failure were to occur, it would have a high likelihood of striking the home and would have severe consequences. It is my opinion that there is a moderate risk associated with whole tree failure. The tree also has large dead branches. These branches are positioned over the neighbor's property and pose a moderate to high risk on their property, depending on occupancy rates. These dead branches could be pruned off to mitigate for this

Agenda

risk. I do not believe there are any mitigation actions for whole tree failure, that are reasonable, and would both maintain tree health and significantly reduce risk. If the tree is to be retained, it would be appropriate to monitor tree lean over time to see if movement is occurring. If a moderate risk cannot be tolerated, whole tree removal would require a permit from Nevada City. It should be noted, that before any management decisions can be made with this tree, the question of tree ownership must be resolved. This will determine what party or parties are responsible

I certify that all the statements in this letter are true, complete, and correct to the best of my knowledge and belief, and that they are made in good faith. I aim to provide the responsible parties a well-reasoned evaluation so that they may make informed decisions. Trees are complex organisms and can have hidden structural defects or maladies that can lead to tree death or failure. In addition, unforeseen forces may be involved. For these reasons, I cannot and will not guarantee the health or safety of any tree.

Sincerely,

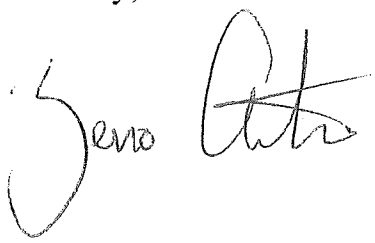

Zeno Acton
ISA Board Certified Master Arborist #WE-6881B
ISA Tree Risk Assessment Qualified
American Society of Consulting Arborists Member

Agenda

TREE A

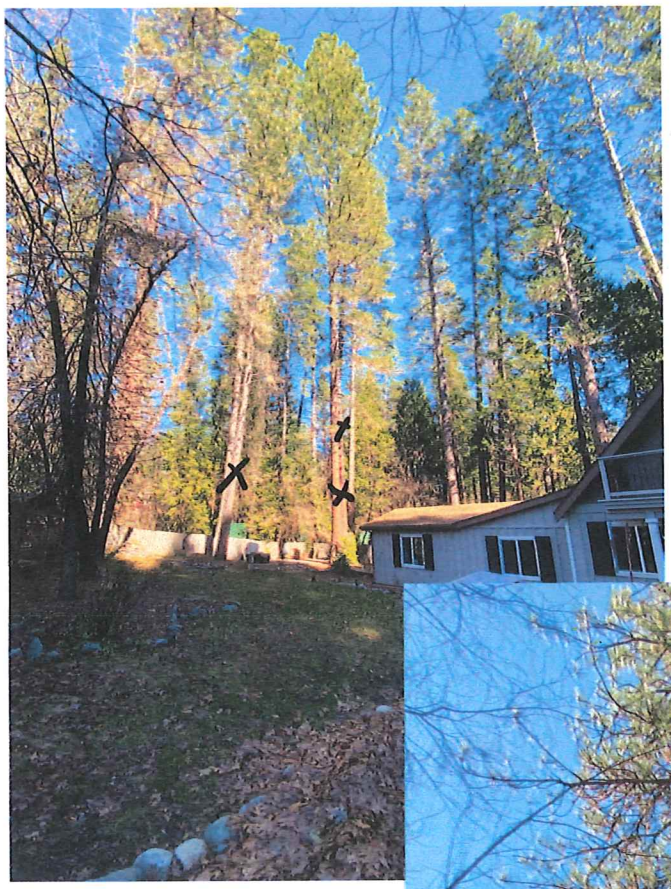

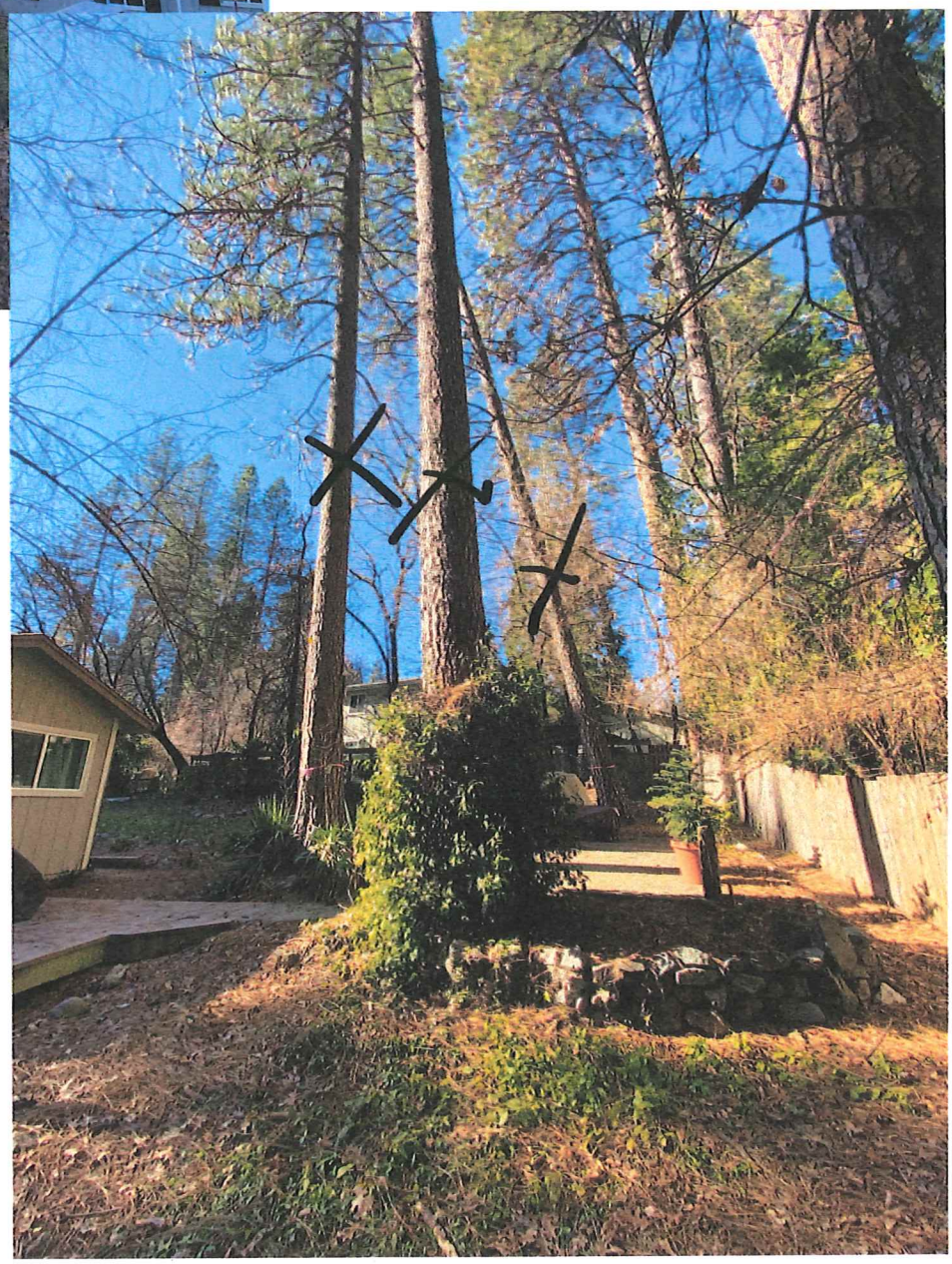

City of Nevada City

TO: Planning Commission

FROM: Amy Wolfson, City Planner

MEETING DATE: February 20, 2020

APPLICANT: Kirk and Deanna McGuire, property owner

RE: **Application for Architectural Review at 632 Zion Street**

ATTACHMENTS:

1. Application (Architectural Review)
2. Site Plan and Elevations
3. Site Photos
4. Manufacturer's Spec Sheets: Hardie, Milguard
5. Design Guidelines Section 5.0: Architectural Review Outside the Historical District

ACTIONS REQUESTED

1. Approve Architectural Review application

SITE DEVELOPMENT STANDARDS

Lot Size: 0.26 acres
Zoning: R1: Single-Family Residential
Setbacks: Front yard: 30-ft, Rear Yard: 25-ft, Interior side yards: 5-ft, Corner Side: 10-feet

Lot Coverage: 50%
Building Height: 35-feet
Historical District: Outside

BACKGROUND: The subject property is developed with an existing 685 square foot unit in 1942 according to the property owners, Kirk and Deanna McGuire. They are proposing to construct a new primary unit and convert the existing unit to an Accessory Dwelling Unit pursuant to a pending Ordinance that is going for a second reading before City Council at their January 22, 2020 meeting, to go into effect 30 days after adoption.

PROJECT PROPOSAL: The proposed residence will be 1,288 square feet in size and will be on-story. The roof material will be composition shingle and siding is proposed to be a horizontal Hardie lap siding on the front, vertical siding on the sides and rear. Windows will be single-hung, vinyl material The front gable roof pitch facing the road will be pitched at 7:12, consistent with Design Guidelines for Nevada City style architecture. The property is consistent with all site development standards including property line setbacks, and sensitive resource setbacks.

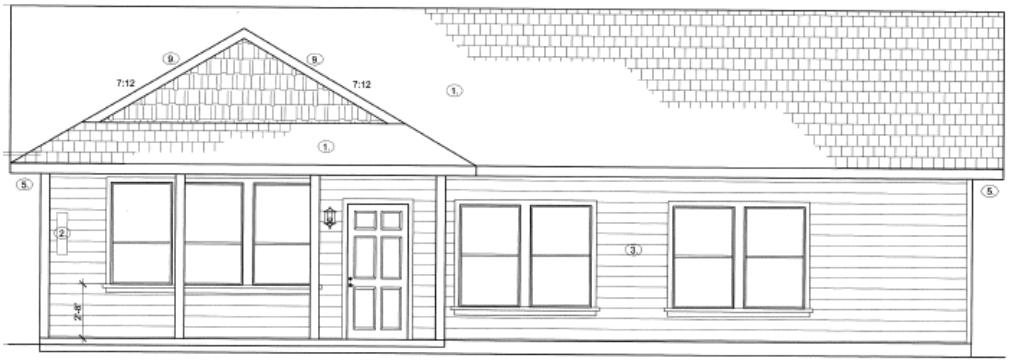

Front Elevation (facing Zion Street)

Material Details:

Windows
Vinyl single-hung

Siding
Hardie-lap

Roofing
Composition Shingle

REGULATORY CONSIDERATIONS:

Architectural Review: The Planning Commission, in their role as the Architectural Review Committee, is required to review proposals for the erection or exterior alterations of any structure, or the remodel, demolition, or razing of any structure. Findings must be made that the structure is generally compatible with Nevada City style architecture and compatible with the surrounding neighborhood.

Second Dwelling Unit: The applicant is also proposing to convert the existing unit to an Accessory Dwelling Unit (ADU) pursuant to a pending Ordinance update that will be codified under Section 17.72.023 in the City municipal Code. ADU's that meet the standards of that section are required to be ministerally processed provided they are compatible with the architecture of the primary dwelling. Many of the pictures attached to the staff report show the existing dwelling unit.

Environmental Review: Because a residence meets criteria in the R1 zoning designation, as an allowed use on the property, local authority can only be ministerial in nature. Sections 21080 of the Public Resource Code, of the California Environmental Quality Act (CEQA), exempts ministerial projects from environmental review.

RECOMMENDED MOTION:

1) Make a Motion to Approve the Architectural Review Application subject to the above Conditions of Approval or as modified, making findings a and b, Sections 17.88.040 of the City Municipal Code:
   a) That the proposed residential structure is generally compatible with Nevada City style architecture; and

   b) That the proposed residence is compatible with the context of the surrounding neighborhood; and

RECOMMENDED CONIDTIONS OF APPROVAL:

1. Nevada City contracts with the Nevada County Building Department for issuance of permits. The County will not issue permits unless the plans have been stamped and approved by Nevada City.

Therefore, prior to issuance of a building permit, submit three sets of plans to Nevada City Planning Department, along with a filing fee of $100 (made payable to the City of Nevada City). The plans will be reviewed by the City Planner and City Engineer for consistency with the approval and will require their signatures.

2. All improvements shall substantially comply with the exhibits presented to the Planning Commission.

3. A Planning Commission member shall be appointed as a Liaison to assist the applicant with any minor modifications to the permit, if needed.

OFFICE USE ONLY	
Filing Fees	
Chk	Cash
Bus. Lic.	

CITY OF NEVADA CITY

317 Broad Street • Nevada City, California 95959 • (530) 265-2496

CITY OF NEVADA CITY
DEC 27 2019
RCPT. AMT.

2nd DWELLING UNIT ARCHITECTURAL REVIEW

Applicant/Property Owner

Kirk & Deanna McGuire
Name

12945 Wings of Morning Dr
Address

Nevada City, CA. 95959
City, State

530-265-9292
Phone

Check all that apply:

- ☑ A New Building
- ☐ 2nd unit within existing residence
- ☐ In the Historic District
- ☑ Other (Describe) new unit to be primary

Supporting data must be attached:

- *Color chips*
- *Material specs, i.e. roofing, windows, etc.*
- *Elevations/Site plans- 3 folded copies*

Address and Assessor's parcel number of property where construction is proposed (also complete attached location key map):

632 Zion Street
Street Address

05-230-10
Assessor's Parcel Number

Nearest cross street _____

New floor area proposed 1288 S.F.

Briefly describe proposed project:

We propose to construct a 1288 ☐, 3 bed, 2 bath residence. That will be classified as the primary residence. The existing 648 ☐ house will now be considered the second dwelling

Number of buildings on property 1

Year of original construction 1942

Square footage of existing residence 648

I am the owner(s) or authorized agent for the subject property.

Kirk McGuire
Signature

12/27/19
Date

Deanna McGuire
Signature

12/27/19
Date

To Agen

SUPPORTING DATA

Attach **THREE FOLDED COPIES** of the elevations and/or supporting information, including a site plan showing the existing and proposed building setbacks from all property lines. **ALL BUILDING DIMENSIONS, INCLUDING BUILDING HEIGHTS AND BUILDINGS SHOWN AT GRADE, MUST BE SHOWN ON THE ELEVATIONS.**

SITE PLAN AND ENVIRONMENTAL CONSIDERATIONS:

Is the coverage and setback of the new construction compatible with surrounding houses? Site Plan shall show that coverage of all buildings does not exceed 50% ☑ Yes ☐ No

If no, please explain _____

VOLUME AND MASSING — Lot Size 11,520 SF

Will the proposed building or changes	Yes	No
Have a larger floor plan than surrounding buildings?	☑	☐
Be taller than surrounding buildings?	☑	☐ Barely
Block views or sunshine from existing buildings?	☐	☑
Does the site plan provide a private yard area?	☑	☐

Discussion, if needed:

PARKING PLAN The 2nd unit shall have one off-street parking space. Please indicate this on the site plan. Also indicate the required two, off-street parking spaces for the main home on the site plan.

MATERIALS

Please list all materials that will be similar to or compatible with the main residence:

Roof: Comp Roof — Existing home: Comp roof

Pitch: 6/12 primarily — Existing home: 6/12

Siding: Hardie Horizontal lap (Front) — Existing home: Wood - Horizontal Lap

Windows: Vinyl S Hung primarily — Existing home: Wood Single hung

Trim: Wood - Advantage pine — Existing home: Wood - fir ?

Decks, porches, railings: front - Cement — Existing home: ~~N/A~~ Front - cement

rear composite decking w/ ornamental steel railing Builders grade

To Age

COLORS (Please provide color chips of each color)

Color brand, name, number

Roof: GAF Vitru HD Dimensional Barkwood — Comp — 3 tab

~~Trim~~ Body: 217 - Chadwick K.M.

~~Accents~~ Trim: Km4598 Mexican Sand Dollar

Railings/Decks: RDI Black powdercoat railings — N/A

Do these colors match the existing home? If not, how do they differ? Similar Tones but darker shades Roofing is more of a brown tone as opposed to the grey/green on the existing

DETAILS

Please provide sufficient information to allow review of the building's details, including:

- Foundation, rock work or veneer accents
- Vents and flues
- Door and window materials, trim and design detail
- Porch and deck framing and railing details
- Garage door

OTHER APPLICABLE INFORMATION

Please complete the attached location key, Use the space below to provide any additional information for the Planning Commission.

To Agen

STAPLE HERE — STAPLE HERE — STAPLE HERE — STAPLE HERE — STAPLE HERE — STAPLE HERE

To Agenda

WILDLAND-URBAN INTERFACE FIRE ZONE REQUIREMENTS R337

The enforcement of *defensible space and inspection shall be performed by the local fire jurisdiction having authority.*
1- prior to building permit final approval, the property shall be in a compliance with the vegetation management requirements prescribed in california fire code section 4906, including california public resources code 4291 or california government code section 51182 per crc r337.

2- where the roof profile allows a space between the roof covering and roof decking, the space shall be constructed to prevent the intrusion of flames and embers, be fire stopped with approved materials or have one layer of minimum 72 pounds mineral-surfaced non-perforated cap sheet installed over the combustible decking per crc R337.

2a- Roofing: Min. Class A. Install in accordance with list and manufacture's installation instructions. R337, R902

3- valley flashing is installed, the flashing shall not be less than no. 26 gage galvanized sheet corrosion-resistant metal installed over not less than on layer of minimum 72-pound mineral-surfaced non-perforated cap sheet, at least 36 inch wide running the full length of the valley per crc r337.

4- Roof gutters shall be provided with the means to prevent the accumulation of leaves and debris in the gutter per CRC R337.

5- Ventilation openings for enclosed attics, enclosed eave soffit spaces, enclosed rafter spaces formed where ceilings are applied directly to the underside of roof rafters, and under floor ventilation openings shall be fully covered with metal wire mesh, vents, other materials or other devices that meet the following requirements per CRC 337.:
a. The dimensions of the openings shall be a minimum of 1/16th inch and shall not exceed 1/8th inch.
b. The materials used shall be noncombustible and corrosion resistant.

6- Vents shall not be installed on the underside of eaves and cornices, unless they are flame and embers resistance, per CRC 337.

7- The exterior wall covering or wall assembly shall comply with one of the following requirements per CRC R337.: Identify which method below will be utilized.
a. Noncombustible material
b. Ignition-resistant material
c. Heavy-timber exterior wall assembly
d. Log wall construction assembly
Wall assemblies that meet the performance criteria in accordance with the test procedures for a 10-minute direct flame contact exposure test set forth in SFM Standard 12-7A-I.

8- Exterior wall coverings shall extend from the top of the foundation to the roof, and terminate at 2 inch nominal solid wood blocking between rafters at all roof overhangs, or in the case of enclosed eaves, terminate at the enclosure per CRC R337.

9- The **exposed roof deck on the underside** of enclosed roof eaves shall consist of one of the following per CRC 337.:
a. Noncombustible material
b. Ignition-resistant material
c. On layer of 5/8" Type 'X' gypsum **sheathing** applied behind an exterior covering on the underside exterior of the roof deck.
The exterior portion of a 1-hour fire resistive exterior wall assembly applied to the underside of the roof deck designed for exterior fire exposure including assemblies using the gypsum panel and sheathing products listed in the Gypsum Association Fire Resistant Design Manual.

10- 1. The exposed underside of **enclosed roof eaves** having either a boxed-in roof eave soffit with a horizontal underside, or sloping rafter tails with an exterior covering applied to the underside of the rafter tails, shall be protected by one of the following per CRC R337.:
a. Noncombustible material
b. Ignition-resistant material
c. One layer of 5/8" Type 'X' gypsum sheathing applied behind an exterior covering on the underside of the rafter tails or soffit.
d. The exterior portion of a 1-hour fire resistive exterior wall assembly applied to the underside of the rafter tails or soffit including assemblies using the gypsum panel and sheathing products listed in the Gypsum Association Fire Resistant Design Manual.
e. Boxed-in roof eave soffit assemblies with a horizontal underside that meet the performance criteria in accordance with the test procedures set forth in SFM Standard 12-7A-3.

11- The exposed underside of **exterior porch ceilings** shall be protected by one of the following per CRC R337.:
a. Non combustible material
b. Ignition-resistant material
c. One layer of 5/8" Type 'X' gypsum sheathing applied behind the exterior covering on the underside of the ceiling
d. The exterior portion of a 1-hour fire resistive exterior wall assembly applied to the underside of the ceiling assembly including assemblies using the gypsum panel and sheathing products listed in the Gypsum Association Fire Resistant Design Manual
e. Porch ceiling assemblies with a horizontal underside that meet the performance criteria in accordance with the test procedures set forth in SFM Standard 12-7A-3.
1. The exposed underside of **exterior porch ceilings** shall be protected by one of the following per CRC R337.:

12- Exterior windows and exterior glazed door assemblies shall comply with one of the following requirements per CRC R337.:
a. Be constructed of multi-pane glazing with a minimum of one tempered pane meeting the requirements of Section 2406 Safety Glazing, or
b. Be constructed of glass block units, or
c. Have a fire-resistant rating of not less than 20 minutes when tested according to NFPA 257, or
d. Be tested to meet the performance requirements of SFM Standard 12-7A-2.

13- Exterior doors shall comply with one of the following per CRC 337.:
a. The exterior surface or cladding shall be of non combustible or ignition-resistant material, or
b. Shall be constructed of solid core wood that comply with the following requirements:
i. Stiles and rails shall not be less than 1 3/8 inches thick
ii. Raised panels shall not be less than 1 ¼ inches thick, except for the exterior perimeter of the raised panel that may taper to a tongue not less than 3/8 inch thick.
c. Shall have a fire-resistant rating of not less than 20 minutes when tested according to NFPA 252
d. Shall be tested to meet the performance requirements of SFM Standard 12-8A-1.

14- Deck, porch, balcony, and stair walking surface s shall be ignition resistant compiling with SFM 12-7A-4 & SFM 12-7A-5, fire retardant treated wood or non combustible material.

15- All exterior materials shall comply with section R337, Materials and Methods for Wildfire Exposure.

VICINITY MAP

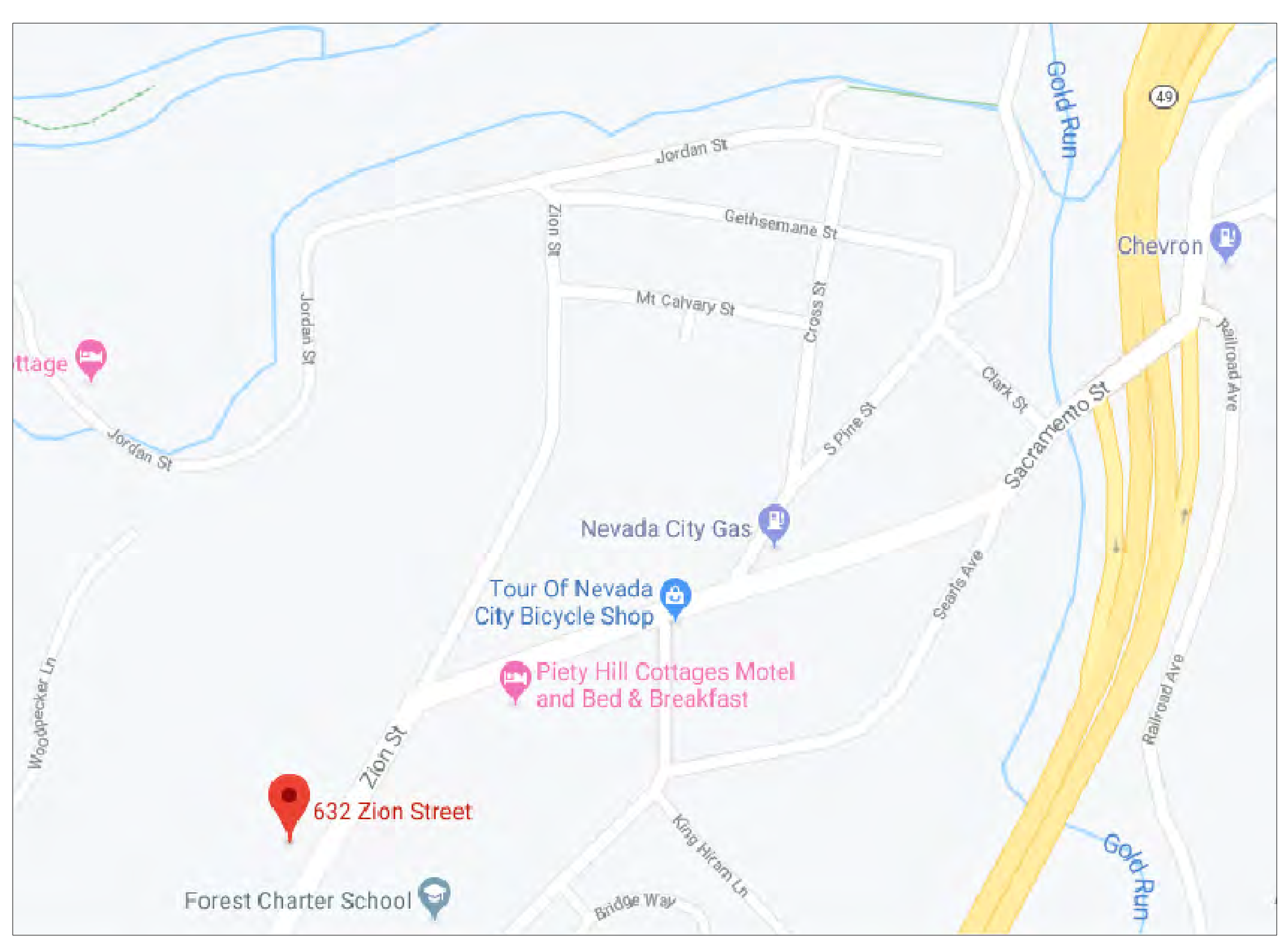

ADDITIONAL COMMENTS

GENERAL ABBREVIATIONS

A/C: AIR CONDITIONER
A.F.F.: ABOVE FINISHED FLOOR
A.F.G.: ABOVE FINISHED GRADE
AWG: AMERICAN WIRE GAUGE
B.O.F.: BOTTOM OF FOOTING
B.O.W.: BOTTOM OF WALL
BP: BLUE PRINT (OR B/P)
BV: BUTTERFLY VALVE
C.C.: CENTER TO CENTER
C.F.M.: CUBIC FEET PER MINUTE
C.F.S: CUBIC FEET PER SECOND
CL: CENTER LINE
CLG.: CEILING
CMU: CONCRETE MASONRY UNIT
C.O.: CLEANOUT
CONT.: CONTINUOUS
CU. FT.: CUBIC FEET
CU. YD.: CUBIC YARD
D.S.: DOWNSPOUT
DIA.: DIAMETER
DIM.: DIMENSION
DN.: DOWN
ED: EDGE DISTANCE
E.F.: EXHAUST FAN
EQ: EQUAL, OR EQUALLY
EXC: EXCAVATE
E.W.: EACH WAY
EXT.: EXTERIOR
F.C.O.: FLOOR CLEANOUT
F.D.: FLOOR DRAIN
F.F.L.: FINISHED FLOOR LEVEL
FL: FLOOR LEVEL
FRPF: FIREPROOF
GALV.: GALVANIZED
G.C.: GENERAL CONTRACTOR
G.F.C.I. OR G.F.I.: GROUND-FAULT CIRCUIT-INTERRUPTER
GPM: GALLONS PER MINUTE
GYP.: GYPSUM
H.B.: HOSE BIB
HDCP: HANDICAPPED (BETTER IF REFERRED TO AS "ACCESSIBLE")
HDPE: HIGH-DENSITY POLYETHYLENE
HV: HIGH VOLTAGE
H.V.A.C.: HEATING, VENTILATION, AND AIR CONDITIONING
H.W.: HOT WATER
IN.: INCH
INSUL.: INSULATION
J-BOX: JUNCTION BOX
JST.: JOIST
KW: KILOWATT
LFT.: LINEAR FEET
LL: LIVE LOAD
LTG.: LIGHTING
LVL: LAMINATED VENEER LUMBER
MH: MANHOLE
MAX: MAXIUMUM
MTL.: MATERIAL
MFG.: MANUFACTURING
MIN.: MINIMUM
NOM: NOMINAL
N.T.S.: NOT TO SCALE
O.C.: ON CENTER
O.D.: OUTSIDE DIAMETER
OPNG.: OPENING OR ROUGH OPENING
PCC: PORTLAND CEMENT CONCRETE
P.L.: PROPERTY LINE (OR PARTS LIST)
PLYWD.: PLYWOOD
P.S.F.: POUNDS PER SQUARE FOOT
P.S.I.: POUNDS PER SQUARE INCH
PVC: POLYVINYL CHLORIDE
QTY: QUANTITY
R: RADIUS
RC: REINFORCED CONCRETE
RD: ROOF DRAIN, ROUND, OR RECEPTACLE DISTRIBUTION PANEL
REBAR: REINFORCING BAR
REQD: REQUIRED
R.O.: ROUGH OPENING
R.O.W.: RIGHT OF WAY
REINF.: REINFORCED
S.D.: SMOKE DETECTOR
SECT.: SECTION
SHT.: SHEET
SHT'G.: SHEATHING
SPECS.: SPECIFICATIONS
SQ. FT.: SQUARE FEET
SQ. IN.: SQUARE INCHES
SS: STAINLESS STEEL, SETSCREW, SOIL STACK, SERVICE SINK, OR SLOP SINK
STD.: STANDARD
STL: STEEL
S.Y.: SQUARE YARD
T&B: TOP AND BOTTOM
T&G: TONGUE AND GROOVE
T.O.B.: TOP OF BEAM
T.O.C.: TOP OF CURB OR TOP OF CONCRETE
T.O.F.: TOP OF FOOTING
T.O.J.: TOP OF JOIST
T.O.M.: TOP OF MASONRY
T.O.W.: TOP OF WALL
UON: UNLESS OTHERWISE NOTED
VA.: VOLTAGE
V.B.: VAPOR BARRIER
V.I.F.: VERIFY IN FIELD
W.C.: WATER CLOSET (TOILET)
WD.: WOOD
WDW.: WINDOW
W.I.: WROUGHT IRON
W.I.C.: WALK-IN CLOSET
WL: WATER LEVEL
W/O: WITHOUT
WP.: WEATHERPROOF
WT.: WEIGHT
HW. : WATER HEATER

ADDRESS

NEW CONSTRUCTION
632 ZION STREET
NEVADA CITY, CA

CONTACT INFORMATION

PLAN DESIGN / DRAFTING
DR DESIGNS
DUSTIN@DRDESIGNSNC.COM
WWW.DRDESIGNSNC.COM
(530) 559-2539

CONTRACTOR

KIRK MIGUIRE
SPECWEST@SBCGLOBAL.NET
530-913-9100

TITLE 24

GARY FAUCETTE
GARY@AVENERGY-ASSOCIATES.COM
661-723-6694

SCOPE OF WORK

- NEW CONSTRUCTION
- DISCONNECT EXISTING OVERHEAD
- NEW DWELLING TO BECOME PRIMARY DWELLING OF A TWO UNIT LOT, EXISTING DWELLING WILL BECOME A SECONDARY DWELLING UNIT.

COMPLIANCE

CODE COMPLIANCE

THIS PLAN SET IS DESIGNED TO COMPLY WITH 2016, CRC, CMC, CPC, CEC, AND 2016 CALIFORNIA ENERGY COMPLIANCE OF TITLE 24. CALIFORNIA BUILDING CODE & 2016 CALIFORNIA GREEN BUILDING STANDARDS CODE

ENERGY COMPLIANCE

WALL	R21
CEILING	R38
WINDOW "U" VALUE	0.32
SHGC	0.25
HOT WATER SYSTEM	TANK LESS GAS

GENERAL INFORMATION

APN#	005-230-010-000
COUNTY / CITY	NEVADA COUNTY
OCCUPANCY	R1, U
SEISMIC CATEGORY	D
CLIMATE ZONE	11
WIND EXPOSURE	C
GROUND SNOW LOAD	29 LBS/SF
FIRE SPRINKLERS NEEDED	NO

2016 CRC FIRE PROTECTION REQUIREMENTS

Per 2016 CRC R302.1(2), R302.4, CEC 110.26

- Fire Separation Distance shall be measured from the face of foundation wall to the property line.
- The service panel shall have working clearance in front of the panel. Clearances shall be 30" wide by 36" deep with a minimum headroom clearance of 6'-6". (Article 110.26)
- Walls less than 5' to the property line shall be protected with 1 hour fire resistive construction. **(new code change) Unprotected roof overhangs are permitted to extend to within 2' of the property line when fire blocking is installed between the top of the wall and roof sheathing.** Overhangs are not allowed to be closer than 2 feet to a property line. R302.1 (1) Openings in walls are not allowed to be less than 3' to the property line. All penetrations less than 3' to the property line shall comply with R302.4. Please provide all appropriate details on the plan.

SHEET INDEX

A1.1	COVER PAGE
A1.2	CONSTRUCTION DOCUMENTS
AG	CAL GREEN COMPLIANCE
A2	SITE PLAN
T24	TITLE 24 CF1R
A3	FLOOR PLAN
A4.1	ELEVATIONS
A4.2	
A5	SECTION
E1	ELECTRICAL
M1	MECHANICAL
SE1	SHEAR WALL / BRACED WALL
SE2	FOUNDATION
SE3	FRAMING
AD1	DETAILS

FOOTAGE

LIVING SPACE

FIRST FLOOR LIVING	1288 SF
ADDITION	NA SF
REMODEL (NO SF CHANGE)	NA SF
RESTORATION (NO SF CHANGE)	NA SF
SUB TOTAL LIVING SPACE	***1288 SF***

NON LIVING SPACE

GARAGE	NA SF
SHOP / WORKSHOP	NA SF
STORAGE	NA SF
REAR PORCH SPACE	0128 SF
FRONT PATIO SPACE	0120 SF
SUB TOTAL NON LIVING SPACE	***0248 SF***
STRUCTURAL FOOTPRINT	***1536 SF***

PRIME CONTRACTOR RESPONSIBILITIES

THE FOLLOWING ARE CONDITIONS ***MAY*** BE NEEDED FOR THE PRIME CONTRACTOR(S) TO GET INFORMATION ABOUT. CONDITIONS ON THE PROJECT ARE NOT LIMITED TO THESE NOR SPECIFIC TO THESE RESPONSIBILITIES. THIS IS A GENERAL GUIDELINE FOR THE PRIME CONTRACTOR(S) AS TO AID THE CONSTRUCTION OF THIS PROJECT.
"NOT ALL OF THESE CONDITIONS WILL BE APPLICABLE TO EVERY PROJECT"

- VERIFY TOP PLATES OF EXISTING AND/OR NEW PRIOR TO THE CONSTRUCTION.
- VERIFY EXISTING WALL SPAN AND/OR TRUSS SPAN PRIOR TO THE CONSTRUCTION.
- VERIFY THE EXISTING FINISH FRAMED FLOOR AND/OR NEW FINISH FRAMED FLOOR PRIOR TO THE CONSTRUCTION.
- VERIFY EXISTING FINISH FRAMED CEILING AND/OR NEW FINISH FRAMED CEILING PRIOR TO THE CONSTRICTION.
- VERIFY ALL PLACED HOLDOWNS AND ANCHOR BOLTS AND/OR APPROVED PLANS PRIOR TO THE CONCRETE PLACEMENT.
- VERIFY FOUNDATION LOCATION PER SITE PLAN PRIOR TO THE CONCRETE PLACEMENT.
- VERIFY REQUIRED OPEN TO FRAME OF EXISTING & NEW WINDOWS WITH MANUFACTURE PRIOR TO THE WINDOW ORDERING.

WRITTEN DIMENSIONS SHALL HAVE PRECEDENCE OVER SCALE DIMENSIONS. contractors and home owner builders shall verify and be responsible for dimensions and conditions of the project. DR Designs must be notified of any variation from the dimensions, conditions and specifications appearing on this plan.

DR DESIGNS
(530) 559 - 2539

NEW CONSTRUCTION

632 ZION STREET
NEVADA CITY, CA

COVER SHEET

DUSTIN RUCKMAN

REVISIONS

1	
2	

APN# 005-230-010-000

19-0076 | 12/27/2019

A1.1

STAPLE HERE ---------- STAPLE HERE ---------- STAPLE HERE ---------- STAPLE HERE ---------- STAPLE HERE ---------- STAPLE HERE ---------- STAPLE HERE

GENERAL NOTES (TYPICAL)

1. Provide each bedroom, basement, and habitable attics with a minimum of one exterior window with a 44" maximum clear opening height, 5.7 sq. ft. minimum clear openable area (minimum 5.0 sq. ft. at grade floor openings), 24" minimum clear openable height and 20" minimum clear width, or an openable exterior exit door. (CRC R310.2.1 and CRC R310.2.2) Window wells, ladders, and steps shall comply with CRC R310.2.3. Bars, grilles, covers, and screens shall be releasable or removable from the inside without the use of a key, tool, special knowledge, or force greater than 15lbs to oper- ate the emergency escape and rescue openings. (CRC R310.4)

2. Each bathroom containing a bathtub, shower or tub/shower combination shall be me- chanically ventilated with Energy Star approved equipment (minimum 50cfm) with an integral humidistat installed. (CRC R303.3.1)

3. Provide attic cross ventilation: 1/150 of attic area or 1/300 with at least 40% but more than 50% of vents are 3 ft. above eave and balance is at eave. As an alternative in Climate Zone 16 (Truckee region), the net area may be reduced to 1/300 when a Class I or II vapor barrier is installed on the warm-in-winter side of the ceiling. Baffles are required at vents for insulation. Provide minimum of 1" inch of air space between insu- lation and roof sheathing. (CRC R806)

4. Enclosed rafter spaces shall have 1 inch clear cross ventilation. (Properly sized rafters for insulation) (CRC R806.3)

5. Under floor cross ventilation: minimum 1.0 sq. ft. for each 150 sq. ft. of under floor area. When a class 1 vapor retarder is installed on the ground surface the minimum area of ventilation may be limited to 1sq.ft for each 1,500 square feet of under-floor space. One ventilation opening shall be within three (3) feet of each corner of the building (CRC R408.1). Unvented crawl spaces shall comply with CRC R408.3.

6. The following areas shall have safety glazing: (CRC R308.4)

- Sliding/swinging glass doors
- Glazing in walls and enclosures facing hot tubs, spas, whirlpools, saunas, steam rooms, bathtubs, showers and swimming pools where the glazing is less than 60 inches above the standing surface within the compartment and within 60 inches hori- zontally of the water's edge (CRC R308.4.5)
- Glazing within a 24" arc of a door that is less than 60 inches above the floor. Glazing installed perpendicular to a door in a closed position and within 24 inches of the door only requires safety glazing if it is on the hinge side of an inswing door. (CRC R308.4.2).
- Glazing where the exposed area is greater than 9sq.ft, bottom is less than 18 in. and at least 36 in. above the floor, and adjacent to a walking surface
- Within 60in. of the bottom tread of a stairway and less than 36in. above the landing
- Glazing in guards and railings
- Glazing adjacent to stairways, landings, and ramps within 36in. horizontally of the walking surface less than 36in. above the walking surface

7. Provide landings and a porch light at all exterior doors. Landings are to be minimum 3 ft deep x width of door. Landings at required egress doors may step down a maximum of 7.75 inches when the door does not swing over the landing and 1.5 inches when door swings onto the landing. Other than required exterior exit doors may have a threshold of 7.75 inches maximum; a landing is not required if a stair with two or fewer risers is located on the exterior side and the door does not swing over the stairway. (CRC R311.3-R311.3.2)

FOUNDATIONS & CONCRETE SLABS

1. Slope drainage 6" within the first 10ft. from the foundation wall. If physical obstruc- tions or lot lines prohibit the 10ft distance, a 2-5 percent slope shall be provided to an approved alternative method of diverting the water away from the foundation. Imper- vious surfaces shall also be sloped a minimum of 2 percent for 10ft away from struc- tures to an approved drainage way. (CRC R401.3)

2. Footings shall extend at least 12 inches into the undisturbed ground surface. (CRC R403.1.4) Unless erected on solid rock, to protect against frost and freezing, the mini- mum foundation depth is 18 inches below grade if between 4,000-7,000 foot elevation and 24 inches below grade for 7,000 foot elevation and above. Exception: Interior foot- ings shall be a minimum of 12 inches below grade. (L-V 3.14)

3. Stepped footings shall be used when slope of footing bottom is greater than 1 in 10 (V: H).

4. Concrete slabs: 3 ½" minimum (CRC R506.1). Slabs under living areas and garages shall be reinforced with wire 6" x 6", 10 gauge x 10 gauge welded mesh or equivalent steel reinforcement and 4" thickness of 3/8 minimum gravel under the concrete slab. Separate from soil with a 6 mil polyethylene vapor retarder with joints lapped not less than 6 inches in living areas. A capillary break shall be installed when a vapor retarder is required.

5. Provide 18" X 24" foundation access through the floor or 16"X24" access through a perimeter wall. (CRC R408.4)

6. Minimum sill bolting: ½" anchor bolts or approved anchors at 6 ft. o.c. maximum for one-story (CRC R403.1.6). Use anchor bolts at 4 ft. o.c. maximum for three story con- struction. Embed bolts 7" minimum. The anchor bolts shall be placed in the middle third of the width of the plate. Locate end bolts not less than 7 bolt diameters, nor more than 12" from ends of sill members. In SDC D0 and above: Provide 3"X3"X0.229 plate washers on each bolt at braced or shear wall locations, standard cut washers shall be permitted for anchor bolts not located in braced/shear wall lines.

CLEARANCES AND TREATMENT FOR WOOD FRAMING

1. Weather exposed glu-lam, beams and posts shall be pressure treated or shall be wood of natural resistance to decay (CRC R317.1.3 & 5)

2. Columns exposed to the weather or in basements when supported on concrete pier or metal pedestals shall be pressure treated or natural resistance to decay unless the pier/pedestals project 1" above concrete or 6" above earth and the earth is covered by an approved impervious moisture barrier. (CRC R317.1.4 exc. 1)

3. Columns in enclosed crawl spaces or unexcavated areas located within the periphery of the building shall be pressure treated or natural resistance to decay unless the column is supported by a concrete pier or metal pedestal of a height 8" or more and the earth is covered by an impervious moisture barrier. (CRC R317.1.4 exc. 2)

4. Deck posts supported by concrete piers or metal pedestals projecting not less than 1" above a concrete floor or 6" above exposed earth. (CRC R317.1.4 exc. 3)

WALLS

1. Positive post to beam connection shall be provided to ensure against uplift and lateral displacement. (CRC R502.9 & CBC 2304.9.7)

2. All fasteners used for attachment of siding & into pressure treated lumber shall be of a corrosion resistant type (CRC R317.3).

3. Fire-block in concealed spaces of stud walls/partitions, vertically at ceiling/floor levels, & horizontally at 10ft. intervals. Fire-block at soffits, drop ceilings/similar locations & in concealed spaces at the top/bottom of stair stringers. (CRC R302.11)

4. Provide approved building paper under the building siding and approved flashing at exterior openings (CRC R703.2). Specify a minimum of 2 layers of Grade D paper un- der stucco and 2 layers of 15lb felt (or equivalent) under stone veneer.

5. Stucco shall have a minimum clearance to earth of 4 inches and 2 inches to paved sur- faces with an approved weep screed. (CRC R703.7.2.1) Masonry stone veneer shall be flashed beneath the first course of masonry and provided with weep holes immediately above the flashing. (CRC R703.8.5 and R703.8.6)

ROOF

1. Provide a minimum 22" x 30" access opening to attic (CRC R807); may be required to be 30"x30" to remove the largest piece of mechanical equipment per the California Mechanical Code.

2. Roof drains/gutters required to be installed per the California Plumbing Code with leaf/ debris protection also installed.

3. All roofing shall be tested/listed Class A minimum.

4. Asphalt shingles with sloped roofs 2/12 to 4/12 shall have two layers of underlayment applied per CRC R905.2.2.

GARAGE & CARPORT

1. Garage shall be separated from the dwelling unit & attic area by ½ inch gypsum board applied to the garage side. Garage beneath habitable rooms shall be separated by not less than 5/8" type X gypsum board. Structure supporting floor/ceiling assemblies used for required separations shall have ½" gypsum board installed minimum. Door openings from the garage to the dwelling shall be solid wood/steel doors or honeycomb steel doors not less than 1 3/8" thick or a 20 minute rated fire door. Doors shall be self-closing & self-latching. No openings directly into a sleeping room from the garage. When the dwelling and garage has fire sprinklers installed per R309.6 and R313, doors into the dwelling unit from the garage only need to be self-closing and self-latching. (CRC R302.5.1 & T-R302.6) (Carports open on two or more sides and no enclosed areas above do not require a separation)

2. Ducts penetrating the garage to dwelling separation shall be a minimum of 26 gauge with no openings into the garage. (CRC R302.5.2)

3. Penetrations through the garage to dwelling separation wall (other than ducts as listed above) shall be fire-blocked per CRC section R302.11, item #4.

4. Garage and carport floor surfaces shall be non-combustible material and slope to drain towards the garage door opening. (CRC R309.1)

5. Appliances and receptacles installed in garage generating a glow, spark or flame shall be located 18" above floor unless it is listed as flammable vapor ignition resistant. Provide protective post or other impact barrier from vehicles (CMC 308.0).

STAIRWAYS & RAMPS

1. Exterior stair stringers must be naturally resistant to decay or pressure treated. (CRC R317.1)

2. Rise shall be maximum 7.75"; Run shall be 10" minimum; headroom 6'-8" minimum; width 36" minimum, 31.5" between a handrail on one side and 27" with handrails on two sides. Variation between riser heights 3/8" maximum. A nosing not less than .75 inches but not more than 1.25 inches shall be provided on stairways with solid risers where the tread depth is less than 11 inches. The leading edge of treads shall project not more than 1.25 inches beyond the tread below. Open risers are permitted, provided the opening between the treads does not permit the passage of a 4" sphere. (Openings are not limited when the stair has a rise of 30" or less). (CRC R311.7)

3. Stairways with 4 or more risers shall have a handrail on one side 34" to 38" above the tread nosing. Circular handrails shall have an outside diameter of 1.25"-2"; if not circular, it shall have a perimeter dimension of 4"-6.25" with a maximum cross sectional dimension of 2.25". See R311.7.8.3 item# 2 for type II handrails with a parameter over 6.25". A minimum clearance of 1.5" shall be maintained from the wall or other surface. Handrails shall be returned, terminate in newel posts, or safety terminals. (CRC R311.7.8.2)

4. Guards shall be 42" minimum height (unless acting as a handrail/guard for a stairway; the guard height may be 34"-38" in height), with openings less than 4" inches clear (guards on the open sides of stairs may have 4 3/8" openings). (CRC R312)

5. Provide landings at the top/bottom of the stairway the width of the stairway. The depth of the landing shall be 36" minimum. (see CRC R311.7.6 for exceptions).

6. Usable spaces underneath enclosed/unenclosed stairways shall be protected by a minimum of ½" gypsum board. (CRC R302.7)

7. Ramps serving the egress door shall have a slope of not more than 1 unit vertical in 12 units horizontal (8.3-percent slope). All other ramps shall have a maximum slope of 1 unit vertical in 8 units horizontal (12.5-percent slope). Exception: Where it is technically infeasible to comply because of site constraints, ramps shall have a slope of not more than 1 unit vertical in 8 units horizontal (12.5-percent slope) (CRC R311.8.1). Provide 3'X3' landings at the top and bottom of ramps, where doors open onto ramps, and where ramps change directions. (CRC R311.8)

DECKS

1. Guards are required if deck or floor is over 30" above grade, minimum 42" high, with openings less than 4" (CRC R312). Guardrails shall be designed and detailed for lateral forces according to CRC Table 301.5.

2. Provide deck lateral load connections at each end of the deck and at deck intersections per CRC R507.2.4. Connectors shall have a minimum allowable stress design capacity of 1,500lbs and install with 24" of the end of the deck. 750lb rated devices are allowed (DTT1Z as example) if located evenly at 4 points along the deck.

3. Posts/columns shall be retrained at the bottom end to prevent lateral displacement; clearly show approved post bases, straps, etc to achieve this per CRC R407.3

4. Hardware and fasteners to be hot-dipped galvanized, stainless steel, silicon bronzed or copper. (CRC R317.3)

ELECTRICAL

1. No electrical panels shall be in closets of bathrooms. Maintain a clearance of 36" inches in front of panels, 30" wide or width of equipment and 6'-6" high for headroom (CEC 110.26).

2. A concrete-encased electrode (ufer) consisting of 20' of rebar or #4 copper wire placed in the bottom of a footing is required for all new construction. (CEC 250.52(A) (3) Bond all metal gas and water pipes to ground. All ground clamps shall be accessible and of an approved type. (CEC 250.104)

3. All 15/20 ampere receptacles installed per CEC 210.52 shall be listed tamper-resistant receptacles. (CEC 406.12)

4. All branch circuits supplying 15/20 ampere outlets in family rooms, dining rooms, living rooms, parlors, libraries, dens, bedrooms, sunrooms, recreation rooms, closets, hallways, kitchens, laundry room or similar rooms/areas shall be protected by a listed combination type arc-fault circuit interrupter. (CEC 210.12)

5. Provide a minimum of one 20A circuit to be used for the laundry receptacle. (CEC 210.11(c)(2)) Provide a minimum of one 20A circuit for bathroom receptacle outlets. (CEC 210.11(C)(3)

6. Provide at least 1 outlet in basements, garages, laundry rooms, decks, balconies, porches and within 3' of the outside of each bathroom basin. (CEC 210.52 (D), (F) & (G))

7. Furnaces installed in attics and crawl spaces shall have an access platform (catwalk in attics), light switch and receptacle in the space. Provide a service receptacle for the furnace. (CEC 210.63)

8. All dwellings must have one exterior outlet at the front and the back of the dwelling. (CEC 210.52(E))

9. Garage receptacles shall not serve outlets outside the garage. A minimum of 1 receptacle shall be provided for each car space. (210.52(G)(1))

10. A 15/20 amp receptacle shall be installed within 50ft of electrical service equipment. (CEC 210.64)

11. Kitchens, dining rooms, pantries, breakfast nooks, and similar areas must have a minimum of two 20A circuits. Kitchen, pantry, breakfast nooks, dining rooms, and similar areas counter outlets must be installed in every counter space 12" inches or wider, not greater than 4' o.c., within 24" inches of the end of any counter space and not higher than 20" above counter. (CEC 210.52 (C)) Island counter spaces shall have at least 1 receptacle outlet unless a range top or sink is installed than 2 receptacles may be required. 1 receptacle is required for peninsular counter spaces. Receptacles shall be located behind kitchen sinks if the counter area depth behind the sink is more than 12" for straight counters and 18" for corner installations. (CEC Figure 210.52(C)(1))

12. Receptacles shall be installed at 12' o.c. maximum in walls starting at 6' maximum from the wall end. Walls longer than two feet shall have a receptacle. Hallway walls longer than 10 ft shall have a receptacle in hallways. (CEC 210.52(A))

13. Receptacles shall not be installed within or directly over a bathtub or shower stall. (CEC 406.9(C) Light pendants, ceiling fans, lighting tracks, etc shall not be located within 3ft horizontally and 8ft vertically above a shower and/or bathtub threshold. (CEC 410.10(D))

14. All lighting/fan fixtures located in wet or damp locations shall be rated for the application. (CEC 410.10)

15. GFCI outlets are required: for all kitchen receptacles that are designed to serve countertop surfaces, dishwashers, bathrooms, in under-floor spaces or below grade level, in exterior outlets, within 6' of a laundry/utility/wet bar sinks, laundry areas, and in all garage outlets including outlets dedicated to a single device or garage door opener (CEC 210.8).

16. Carbon-monoxide alarms shall be installed in dwelling units with fuel-burning appliances or with attached garages (CRC R315):

- Outside of each separate sleeping area in the immediate vicinity of bedrooms
- On every level of a dwelling unit including basements
- Alterations, repairs, or additions exceeding 1,000 dollars (May be battery operated)

17. Smoke alarms shall be installed (CRC (R314):

- In each room used for sleeping purposes.
- Outside of each separate sleeping area in the immediate vicinity of bedrooms.
- In each story, including basements.
- Shall not be installed within 20ft horizontally of cooking appliances and no closer than 3ft to mechanical registers, ceiling fans and bathroom doors with a bathtub or shower unless this would prevent placement of a smoke detector (314.3(4))
- .Alterations, repairs, or additions exceeding 1,000 dollars. (May be battery operated)

18. All smoke and carbon-monoxide alarms shall be hardwired with a battery backup (smoke alarms shall have a 10-year sealed battery). (CRC R314.4 & R315.1.2)

19. All 15/20 ampere receptacles in wet locations shall have in-use (bubble) covers installed. All receptacles in wet locations shall also be listed weather-resistant type. (CEC 406.9(B)(1)

PLUMBING

1. Underfloor cleanouts shall not be more than 5 FEET from an underfloor access, access door or trap door. (CPC 707.9)

2. ABS piping shall not be exposed to direct sunlight unless protected by water based synthetic latex paints. (CPC 312.13)

3. PVC piping shall not be exposed to direct sunlight unless protected by water based synthetic latex paint, .04" thick wrap or otherwise protected from UV degradation. (CPC 312.14)

4. The adjacent space next to showers without thresholds shall be considered a "wet location" when using the CRC, CBC, and the CEC. (CPC 408.5)

5. Shower compartments, regardless of shape, shall have a minimum finished interior of 1024 square inches (32" by 32") and shall also be capable of encompassing a 30" circle. The required area and dimensions shall be measured at a height equal to the top of the threshold and shall be maintained to a point of not less than 70" above the shower drain outlet. (CPC 408.6) Provide curtain rod or door a minimum of 22" in width (CPC 408.5). Showers and tubs with showers require a non-absorbent surface up to 6' above the floor. (CRC R307.2)

6. Water Heaters: Provide pressure relief valve with drain to outside for water heater. (CPC 504.6) Provide seismic strapping in the upper & lower third of the water heater a minimum of 4" above controls. (CPC 507.2) The water heater shall be of an instantaneous type or the following shall be provided (new construction only) (CEC 150(n)):

- A 120V receptacles provided within 3ft
- A category III or IV vent, or a straight (without bends) Type B vent
- Condensate drain that is no more than 2 inches higher than the base of the water heater
- Gas supply line with a minimum 200,000 Btu/hr dedicated capacity for the water heater

7. Domestic hot water lines shall be insulated. Insulation shall be the thickness of the pipe diameter up to 2" in size and minimum 2" thickness for pipes larger than 2" in diameter. (CPC 609.11)

8. A 3-inch gravity drain shall be provided at the low point of underfloor spaces, installed so as to provide 1/4-inch per foot grade and terminate at an exterior point of the building protected from blockage. The opening shall be screened with a corrosion-resistant wire mesh with mesh openings of 1/4-inch in dimension. Lengths of the gravity drains over 10 feet in length shall be first approved by the Building Official. (L-V 8.9)

9. Water heaters located in attics, ceiling assemblies and raised floor assemblies shall show a water-tight corrosion resistant minimum 1 ½" deep pan under the water heater with a minimum ¾ inch drain to the exterior of the building. (CPC 507.5)

10. Water closet shall be located in a space not less than 30" in width (15" on each side) and 24" minimum clearance in front. (CPC 402.5)

11. The maximum hot water temperature discharging from a bathtub or whirlpool bathtub filler shall not exceed 120 degrees F. (CPC 418)

12. Provide anti-siphon valves on all hose bibs. (CPC 603.5.7)

13. Floor drains shall be provided with a trap primer. (CPC 1007)

14. Maximum water flow rates. (CGBSC 4.303.1):

- Water Closets: 1.28gpf
- Urinals: .125gpf
- Kitchen Faucets: 1.8gpm @ 60psi
- Lavatory Faucets: 1.2pgm @ 60psi
- Showerheads: 1.8gpm

MECHANICAL

1. Wood burning appliances shall be one of the following:

- A pellet-fueled wood burning heater.
- A U.S. EPA Phase II Certified wood burning heater.
- An appliance or fireplace determined to meet the U.S. EPA particulate matter emission standard of less than 7.5 grams per hour for a non-catalytic wood fired appliance or 4.1 grams per hour for a catalytic wood fired appliance and is approved in writing by the APCO.

2. All newly installed gas fireplaces shall be direct vent and sealed-combustion type. (CMC 912.2)

3. Any installed wood stove or pellet stove shall have a permanent NSPS label certifying emission limits.

4. Top chimney must extend a minimum of 2 ft. above any part of the building within 10 ft. (CMC 802.5.4)

5. Fireplaces shall have closable metal or glass doors, have combustion air intake drawn from the outside and have a readily accessible flue dampener control. Continuous burning pilot lights are prohibited. (CEC 150.0(e))

6. Provide combustion air for all gas fired appliances per CMC Chapter 7.

7. Gas vents passing through an insulated assembly shall have a metal insulation shield a minimum 2" above insulation. (509.6.2.7)

8. Gas water heater and furnace are not allowed in areas opening into bathrooms, closets or bedrooms unless installed in a closet equipped with a listed gasketed door assembly and a listed self-closing device with all combustion air obtained from the outdoors. (CPC 504)

9. Roof top equipment on roofs with over 4/12 slope shall have a level 30"x30" working platform. (CMC 304.2)

10. Exhaust openings terminating to the outdoors shall be covered with a corrosion resistant screen ¼"-1/2" in opening size (not required for clothes dryers). (CMC 502.1)

11. Vent dryer to outside of building (not to under-floor area). Vent length shall be 14 ft. maximum. Shall terminate a minimum of 3' from the property line and any opening into the building. (CMC 504.4.2)

12. Environmental Air Ducts shall not terminate less than 3' to a property line, 10' to a forced air inlet, 3' to openings into the building and shall not discharge on to a public way. (CMC 502.2.1)

13. Provide minimum 100 square inches make-up air for clothes dryers installed in closets. (CMC 504.4.1(1))

14. Heating system is required to maintain 68 degrees at 3 ft. above floor level and 2ft from exterior walls in all habitable rooms. (CRC R303.9).

ENERGY CODE

1. All ducts in conditioned spaces must include R-4.2 insulation. (California Energy Code 150.1(c)9)

2. Insulate the first 5' of hot/cold water lines, all lines ¾ inch in diameter or larger, all recirculation piping, piping to storage tanks and all hot water pipes to kitchen fixtures from the water heater. (California Energy Code 150(j)(2))

3. Isolation water valves required for instantaneous water heaters 6.8kBTU/hr and above. Valves shall be installed on both cold and hot water lines. Each valve will need a hose bib or other fitting allowing for flushing the water heater when the valves are closed. (CEC 110.3(c)7)

4. ALL luminaires must be high efficacy (California Energy Code 150.0(k)1A)

5. The maximum number of blank electrical boxes installed more than 5 feet above the floor is limited to the number of bedrooms. The blank boxes shall be served by a dimmer, vacancy sensor or fan speed control. (California Energy Code 150.0(k)1B)

6. Luminaries recessed in insulated ceilings must meet these requirements (California Energy Code 150.0(k)1C):

- They must be rated for direct insulation contact (IC).
- They must be certified as airtight (AT) construction.
- They must have a sealed gasket or caulking between the housing and ceiling to prevent flow of heated or cooled air out of living areas and into the ceiling cavity.
- They may not contain a screw base sockets
- They shall contain a JA8 compliant light source

7. In bathrooms, garages, laundry rooms, and utility rooms, at least one luminaire in each of these spaces shall be controlled by a vacancy sensor. (California Energy Code 150.0(k)2J)

8. Joint Appendix A (JA8) certified lamps shall be considered high efficacy. JA8 compliant light sources shall be controlled by a vacancy sensor or dimmer. (Exception: <70sf closets and hallway) (California Energy Code 150.0(k)2K)

9. Under-cabinet lighting shall be switched separately from other lighting systems. (California Energy Code 150.0(k)2L)

10. All exterior lighting shall be high efficacy, be controlled by a manual on/off switch and have one of the following controls (the manual switch shall not override the automatic control device): (California Energy Code 150.0(k)3A)

- Photo-control and motion sensor
- Photo-control and automatic time switch control
- Astronomical time clock control turning lights off during the day

11. All high efficacy light fixtures shall be certified as "high-efficacy" light fixtures by the California Energy Commission.

12. Contractor shall provide the homeowner with a luminaire schedule giving the lamps used in the luminaires installed. (California Energy Code 10-103(b))

13. Project shall meet the minimum ventilation and acceptable indoor air quality requirements per ASHRAE Standard 62.2. Window operation is not a permissible method of providing the whole building ventilation airflow required. This is subject to HERS testing. The following label must be attached to the fan switch: "To maintain minimum levels of outside air ventilation required for good health, the fan control should be on at all times when the building is occupied, unless there is severe outdoor air contamination." (California Energy Code 150.0(o))

GREEN BUILDING

1. Projects which disturb less than one acre of soil and are not part of a larger common plan of development which in total disturbs one acre or more, shall manage storm water drainage during construction, one or more of the following measures shall be implemented to prevent flooding of adjacent property, prevent erosion and retain soil runoff on the site (CGBSC 4.106.2):

- Retention basins of sufficient size shall be utilized to retain storm water on site
- Where storm water is conveyed to a public drainage system, collection point, gutter, or similar disposal method, water shall be filtered by use of a barrier system, wattle or other method approved by the enforcing agency.

2. All new residential construction with attached private garages shall have the following for electric vehicle (EV) charging stations (CGBSC 4.106.4):

- Install a minimum 1-inch conduit capable of supplying a 208/240V branch circuit to a suitable box location for EV charging. The other end shall terminate to the main service and/or subpanel.
- The main panel and/or subpanel shall be of sufficient size to install a 40-ampere dedicated branch circuit. The dedicated overcurrent protection space shall be labeled "EV CAPABLE".

3. Multiple shower heads serving a single shower shall have a combined flow rate of 2gpm or the shower shall be designed to allow only one shower outlet to be in operation at a time. (CGBSC 4.303.1.3.2)

4. Residential projects with an aggregate landscape area equal to or greater than 500 square feet shall comply with either a local water efficient landscape ordinance or the current California Department of Water Resources' Model Water Efficient Landscape Ordinance (MWELO), whichever is more stringent. Automatic irrigation system controllers installed at time of final inspection shall have weather or soil based controllers and/or weather based controllers with rain sensors. Soil moisture based controllers are not required to have rain sensor input. (CGBSC 4.304)

5. Recycle and/or reuse a minimum of 65 percent of nonhazardous construction and demolition waste. (CGBSC 4.408.2)

6. At time of final inspection, a building operation and maintenance manual, compact disc, etc shall be provided containing the following: (CGBSC 4.410)

- Directions that manual shall remain onsite for the life of the building
- Operation and maintenance instructions for equipment, appliances, roof/yard drainage, irrigation systems, etc
- Information from local utility, water and waste recovery providers
- Public transportation and carpool options
- Material regarding importance of keeping humidity levels between 30-60 percent
- Information regarding routine maintenance procedures
- State solar energy incentive program information
- A copy of any required special inspection verifications that were required (if any)

7. The project shall meet minimum pollutant control requirements for adhesives, sealants, caulks, paints, carpet, resilient flooring systems, etc. (CGBSC 4.504)

8. Duct openings related to HVAC systems shall be covered with tape, plastic, sheet metal or other methods to reduce the amount of water, dust and debris which may enter the system. (CGBSC 4.504.1)

WRITTEN DIMENSIONS SHALL HAVE PRECEDENCE OVER SCALE DIMENSIONS. contractors and home owner builders shall verify and be responsible for dimensions and conditions of the project. DR Designs must be notified of any variation from the dimensions, conditions and specifications appearing on this plan.

DR DESIGNS
(530) 559 - 2539

NEW CONSTRUCTION

632 ZION STREET
NEVADA CITY, CA

CONSTRUCTION DOCUMENT

DUSTIN RUCKMAN	
REVISIONS	
1	
2	
APN# 005-230-010-000	
19-0076	12/27/2019
A1.2	

STAPLE HERE - - - - - STAPLE HERE - - - - - STAPLE HERE - - - - - STAPLE HERE - - - - - STAPLE HERE - - - - - STAPLE HERE

CAL GREEN

RESIDENTIAL MANDATORY MEASURES EFFECTIVE JANUARY 1, 2017
2016 CALGREEN CODE

CHAPTER 1 - ADMINISTRATION
101.3.1 SCOPE

APPLIES TO ALL NEWLY CONSTRUCTED RESIDENTIAL BUILDINGS:
LOW-RISE, HIGH-RISE, AND
HOTELS/MOTELS.

CHAPTER 3 - GREEN BUILDING
301.1.1 ADDITIONS AND ALTERATIONS

- APPLIES TO ADDITIONS OR ALTERATIONS OF RESIDENTIAL BUILDINGS WHERE THE ADDITION OR ALTERATION INCREASES THE BUILDING'S CONDITIONED AREA, VOLUME, OR SIZE.
- REQUIREMENTS ONLY APPLY WITHIN THE SPECIFIC AREA OF THE ADDITION OR ALTERATION.
- NOTE DIRECTS CODE USERS TO CIVIL CODE SECTION 1101.1 ET SEQ., REGARDING REPLACEMENT OF NON-COMPLIANT PLUMBING FIXTURES.

301.2 LOW-RISE AND HIGH-RISE BUILDINGS

- BANNERS IDENTIFY PROVISIONS APPLYING TO LOW-RISE ONLY [LR] OR HIGH-RISE ONLY [HR].

DIVISION 4.1 - PLANNING AND DESIGN (SITE DEVELOPMENT)
4.106.2 STORM WATER DRAINAGE AND RETENTION DURING CONSTRUCTION

- PROJECTS WHICH DISTURB LESS THAN 1 ACRE OF SOIL AND ARE NOT PART OF A LARGER COMMON PLAN OF DEVELOPMENT SHALL MANAGE STORM WATER DRAINAGE DURING CONSTRUCTION.

4.106.3 GRADING AND PAVING

- CONSTRUCTION PLANS SHALL INDICATE HOW THE SITE GRADING OR DRAINAGE SYSTEM WILL MANAGE ALL SURFACE WATER FLOWS TO KEEP WATER FROM ENTERING BUILDINGS. EXCEPTION FOR ADDITIONS AND ALTERATIONS WHICH DO NOT ALTER THE EXISTING DRAINAGE PATH.

4.106.4 ELECTRIC VEHICLE (EV) CHARGING FOR NEW CONSTRUCTION

- COMPLY WITH SECTION 4.106.4.1 AND 4.106.4.2 FOR FUTURE INSTALLATION AND USE OF EV CHARGERS.
- ELECTRIC VEHICLE SUPPLY EQUIPMENT (EVSE) SHALL BE INSTALLED IN ACCORDANCE WITH THE CALIFORNIA ELECTRICAL CODE, ARTICLE 625.
- EXCEPTIONS ON A CASE-BY-CASE BASIS AS DETERMINED BY THE LOCAL ENFORCING AGENCY:
    1. WHERE THERE IS NO COMMERCIAL POWER SUPPLY.
    2. VERIFICATION THAT MEETING REQUIREMENTS WILL ALTER THE LOCAL UTILITY INFRASTRUCTURE DESIGN REQUIREMENTS ON THE UTILITY SIDE OF THE METER INCREASING COSTS TO THE HOMEOWNER/DEVELOPER BY MORE THAN $400.00 PER DWELLING UNIT.

4.106.4.1 & 4.106.4.1.1 EV CHARGING: 1- & 2-FAMILY DWELLINGS/TOWNHOUSES WITH ATTACHED PRIVATE GARAGES

- INSTALL A LISTED RACEWAY TO ACCOMMODATE A DEDICATED 208/240-VOLT BRANCH CIRCUIT FOR EACH DWELLING UNIT.
- RACEWAY SHALL NOT BE LESS THAN TRADE SIZE 1 (NOMINAL 1-INCH INSIDE DIAMETER).
- RACEWAY SHALL ORIGINATE AT THE MAIN SERVICE OR SUBPANEL AND TERMINATE INTO A LISTED CABINET, BOX OR OTHER ENCLOSURE IN CLOSE PROXIMITY TO THE PROPOSED LOCATION OF AN EV CHARGER.
- RACEWAYS ARE REQUIRED TO BE CONTINUOUS AT ENCLOSED, INACCESSIBLE OR CONCEALED AREAS AND SPACES.
- SERVICE PANEL AND/OR SUBPANEL SHALL PROVIDE CAPACITY TO INSTALL A 40-AMPERE MINIMUM DEDICATED BRANCH CIRCUIT AND SPACE(S) RESERVED TO PERMIT INSTALLATION OF A BRANCH CIRCUIT OVERCURRENT PROTECTIVE DEVICE. SERVICE PANEL OR SUBPANEL CIRCUIT DIRECTORY SHALL IDENTIFY THE OVERCURRENT PROTECTIVE DEVICE SPACE(S) RESERVED FOR FUTURE EV CHARGING AS "EV CAPABLE". THE RACEWAY TERMINATION LOCATION SHALL BE PERMANENTLY AND VISIBLY MARKED AS "EV CAPABLE".

4.106.4.2 EV CHARGING FOR MULTIFAMILY DWELLINGS

- APPLIES TO BUILDING SITES WITH 17 OR MORE MULTIFAMILY DWELLING UNITS CONSTRUCTED ON THE SITE.
- 3% OF THE TOTAL NUMBER OF PARKING SPACES PROVIDED FOR ALL TYPES OF PARKING FACILITIES, BUT IN NO CASE LESS THAN ONE, SHALL BE ELECTRIC VEHICLE CHARGING SPACES (EV SPACES) CAPABLE OF SUPPORTING FUTURE EVSE. CALCULATIONS FOR THE NUMBER OF EV SPACES SHALL BE ROUNDED UP TO THE NEAREST WHOLE NUMBER.

NOTE: CONSTRUCTION DOCUMENTS ARE INTENDED TO DEMONSTRATE THE PROJECT'S CAPABILITY AND CAPACITY FOR FACILITATING FUTURE EV CHARGING. THERE IS NO REQUIREMENT FOR EV SPACES TO BE CONSTRUCTED OR AVAILABLE UNTIL EV CHARGERS ARE INSTALLED FOR USE.

4.106.4.2.1 EV CHARGING SPACE (EV SPACE) LOCATIONS

- CONSTRUCTION DOCUMENTS SHALL INDICATE THE LOCATION OF PROPOSED EV SPACES. AT LEAST 1 EV SPACE SHALL BE LOCATED IN COMMON USE AREAS AND AVAILABLE FOR USE BY ALL RESIDENTS.
- WHEN EV CHARGERS ARE INSTALLED, EV SPACES REQUIRED BY SECTION 4.106.4.2.2, ITEM 3, SHALL COMPLY WITH AT LEAST 1 OF THE FOLLOWING OPTIONS:
    1. THE EV SPACE SHALL BE LOCATED ADJACENT TO AN ACCESSIBLE PARKING SPACE MEETINGTHE REQUIREMENTS OF THE CALIFORNIA BUILDING CODE, CHAPTER 11A, TO ALLOW USE OF THE EV CHARGER FROM THE ACCESSIBLE PARKING SPACE.
    2. THE EV SPACE SHALL BE LOCATED ON AN ACCESSIBLE ROUTE TO THE BUILDING, AS DEFINED IN THE CALIFORNIA BUILDING CODE, CHAPTER 2.

4.106.4.2.2 EV CHARGING SPACE (EV SPACE) DIMENSIONS

EV SPACES SHALL BE DESIGNED TO COMPLY WITH THE FOLLOWING:
1. THE MINIMUM LENGTH OF EACH EV SPACE SHALL BE 18 FEET.
2. THE MINIMUM WIDTH OF EACH EV SPACE SHALL BE 9 FEET.
3. ONE IN EVERY 25 EV SPACES, BUT NOT LESS THAN 1, SHALL ALSO HAVE AN 8-FOOT WIDE MINIMUM AISLE. A 5-FOOT WIDE MINIMUM AISLE SHALL BE PERMITTED PROVIDED THE MINIMUM WIDTH OF THE EV SPACE IS 12 FEET.
    A. SURFACE SLOPE FOR TIS EV SPACE AND AISLE SHALL NOT EXCEED 1 UNIT VERTICAL IN 48 UNITS HORIZONTAL (2.083% SLOPE) IN ANY DIRECTION.

4.106.4.2.3 SINGLE EV SPACE REQUIRED

- INSTALL LISTED RACEWAY CAPABLE OF ACCOMMODATING A 208/240-VOLT DEDICATED BRANCH CIRCUIT.
    1. THE RACEWAY SHALL NOT BE LESS THAN TRADE SIZE 1 (NOMINAL 1-INCH INSIDE DIAMETER).
    2. THE RACEWAY SHALL ORIGINATE AT THE MAIN SERVICE OR SUBPANEL AND SHALL TERMINATE INTO A LISTED CABINET, BOX OR ENCLOSURE IN CLOSE PROXIMITY TO THE PROPOSED LOCATION OF THE EV SPACE.
    3. CONSTRUCTION DOCUMENTS SHALL IDENTIFY THE RACEWAY TERMINATION POINT.
    4. THE SERVICE PANEL AND/OR SUBPANEL SHALL PROVIDE CAPACITY TO INSTALL A 40-AMPERE MINIMUM DEDICATED BRANCH CIRCUIT AND SPACE(S) RESERVED TO PERMIT INSTALLATION OF A BRANCH CIRCUIT OVERCURRENT PROTECTIVE DEVICE.

CAL GREEN CONT.

4.106.4.2.4 MULTIPLE EV SPACES REQUIRED

- CONSTRUCTION DOCUMENTS SHALL INDICATE RACEWAY TERMINATION POINT AND PROPOSED LOCATION OF FUTURE EV SPACES AND EV CHARGERS. CONSTRUCTION DOCUMENTS SHALL ALSO PROVIDE INFORMATION ON AMPERAGE OF FUTURE EVSE, RACEWAY METHOD(S), WIRING SCHEMATICS AND ELECTRICAL LOAD CALCULATIONS TO VERIFY ELECTRICAL PANEL SERVICE CAPACITY AND ELECTRICAL SYSTEM, INCLUDING ANY ON-SITE DISTRIBUTION TRANSFORMER(S), HAVE SUFFICIENT CAPACITY TO SIMULTANEOUSLY CHARGE ALL EVS AT ALL REQUIRED EV SPACES AT FULL RATED AMPERAGE OF THE EVSE.
- PLAN DESIGN SHALL BE BASED UPON A 40-AMPERE MINIMUM BRANCH CIRCUIT.
- RACEWAYS AND RELATED COMPONENTS PLANNED TO BE INSTALLED UNDERGROUND, ENCLOSED, INACCESSIBLE OR IN CONCEALED AREAS AND SPACES SHALL BE INSTALLED AT THE TIME OF ORIGINAL CONSTRUCTION.

4.106.4.2.5 IDENTIFICATION

- THE SERVICE PANEL OR SUBPANEL CIRCUIT DIRECTORY SHALL IDENTIFY THE OVERCURRENT PROTECTIVE DEVICE SPACE(S) RESERVED FOR FUTURE EV CHARGING PURPOSES AS "EV CAPABLE" IN ACCORDANCE WITH THE CALIFORNIA ELECTRICAL CODE.

NOTES:
A. THE CALIFORNIA DEPARTMENT OF TRANSPORTATION ADOPTS AND PUBLISHES THE "CALIFORNIA MANUAL ON UNIFORM TRAFFIC CONTROL DEVICES (CALIFORNIA MUTCD)" TO PROVIDE UNIFORM STANDARDS AND SPECIFICATIONS FOR ALL OFFICIAL TRAFFIC CONTROL DEVICES IN CALIFORNIA. ZERO EMISSION VEHICLE SIGNS AND PAVEMENT MARKINGS CAN BE FOUND IN THE NEW POLICIES & DIRECTIVES NUMBER 12-01.
WEBSITE: HTTP://WWW.DOT.CA.GOV/HQ/TRAFFOPS/POLICY/13-01.PDF
B. SEE VEHICLE CODE SECTION 22511 FOR EV CHARGING SPACE SIGNAGE IN OFF-PARKING FACILITIES AND FOR USE OF EV CHARGING SPACES.
C. THE GOVERNOR'S OFFICE OF PLANNING AND RESEARCH (OPR) PUBLISHED A "ZEROEMISSION VEHICLE COMMUNITY READINESS GUIDEBOOK" WHICH PROVIDES HELPFUL INFORMATION FOR LOCAL GOVERNMENTS, RESIDENTS AND BUSINESSES.
WEBSITE: HTTP://OPR.CA.GOV/DOCS/ZEV_GUIDEBOOK.PDF

DIVISION 4.2- ENERGY EFFICIENCY
4.201.1 & 5.201.1 SCOPE

- ENERGY EFFICIENCY REQUIREMENTS FOR LOW-RISE RESIDENTIAL (SECTION 4.201.1) AND HIGHRISE RESIDENTIAL/HOTELS/MOTELS (SECTION 5.201.1) ARE NOW IN BOTH RESIDENTIAL AND NONRESIDENTIAL CHAPTERS OF CALGREEN.
- STANDARDS FOR RESIDENTIAL BUILDINGS DO NOT REQUIRE COMPLIANCE WITH LEVELS OF MINIMUM ENERGY EFFICIENCY BEYOND THOSE REQUIRED BY THE 2016 CALIFORNIA ENERGY CODE.

DIVISION 4.3 – WATER EFFICIENCY AND CONSERVATION (INDOOR WATER USE)
4.303.1 WATER CONSERVING PLUMBING FIXTURES AND FITTINGS

PLUMBING FIXTURES AND FITTINGS SHALL COMPLY WITH THE FOLLOWING:

- 4.303.1.1 WATER CLOSETS: ≤ 1.28 GAL/FLUSH
- 4.303.1.2 WALL MOUNTED URINALS: ≤ 0.125 GAL/FLUSH; ALL OTHER URINALS ≤ 0.5 GAL/FLUSH
- 4.303.1.3.1 SINGLE SHOWERHEADS: ≤ 2.0 GPM @ 80 PSI
- 4.303.1.3.2 MULTIPLE SHOWERHEADS: COMBINED FLOW RATE OF ALL SHOWERHEADS CONTROLLED BY A SINGLE VALVE SHALL NOT EXCEED 2.0 GPM @ 80 PSI, OR ONLY ONE SHOWER OUTLET IS TO BE IN OPERATION AT A TIME
- 4.303.1.4.1 RESIDENTIAL LAVATORY FAUCETS: MAXIMUM FLOW RATE ≤ 1.2 GPM @ 60 PSI; MINIMUM FLOW RATE ≥ 0.8 GPM @ 20 PSI
- 4.303.1.4.2 LAVATORY FAUCETS IN COMMON AND PUBLIC USE AREAS OF RESIDENTIAL BUILDINGS: ≤ 0.5 GPM @ 60 PSI
- 4.303.1.4.3 METERING FAUCETS: ≤ 0.25 GALLONS PER CYCLE
- 4.303.1.4.4 KITCHEN FAUCETS: ≤ 1.8 GPM @ 60 PSI; TEMPORARY INCREASE TO 2.2 GPM ALLOWED BUT SHALL DEFAULT TO 1.8 GPM

4.303.2 STANDARDS FOR PLUMBING FIXTURES AND FITTINGS

- PLUMBING FIXTURES AND FITTINGS SHALL BE INSTALLED IN ACCORDANCE WITH THE CALIFORNIA PLUMBING CODE, AND SHALL MEET APPLICABLE STANDARDS REFERENCED IN TABLE 1701.1 OF THE CALIFORNIA PLUMBING CODE.

DIVISION 4.3 – WATER EFFICIENCY AND CONSERVATION (OUTDOOR WATER USE)
4.304.1 OUTDOOR POTABLE WATER USE IN LANDSCAPE AREAS

- AFTER DECEMBER 1, 2015, NEW RESIDENTIAL DEVELOPMENTS WITH AN AGGREGATE LANDSCAPE AREA EQUAL TO OR GREATER THAN 500 SQUARE FEET SHALL COMPLY WITH ONE OF THE FOLLOWING:
    1. A LOCAL WATER EFFICIENT LANDSCAPE ORDINANCE OR THE CURRENT CALIFORNIA DEPARTMENT OF WATER RESOURCES' MODEL WATER EFFICIENT LANDSCAPE ORDINANCE (MWELO), WHICHEVER IS MORE STRINGENT, OR
    2. PROJECTS WITH AGGREGATE LANDSCAPE AREAS LESS THAN 2500 SQUARE FEET MAY COMPLYWITH THE MWELO'S APPENDIX D PRESCRIPTIVE COMPLIANCE OPTION.

DIVISION 4.4 – MATERIAL CONSERVATION & RESOURCE EFFICIENCY (ENHANCED DURABILITY & REDUCED MAINTENANCE)
4.406.1 RODENT PROOFING

- ANNULAR SPACES AROUND PIPES, ELECTRIC CABLES, CONDUITS OR OTHER OPENINGS IN SOLE/BOTTOM PLATES AT EXTERIOR WALLS SHALL BE CLOSED WITH CEMENT MORTAR, CONCRETE MASONRY OR A SIMILAR METHOD ACCEPTABLE TO THE ENFORCING AGENCY TO PREVENT PASSAGE OF RODENTS.

DIVISION 4.4 – MATERIAL CONSERVATION & RESOURCE EFFICIENCY (CONSTRUCTION WASTE REDUCTION, DISPOSAL & RECYCLING)
4.408.1 CONSTRUCTION WASTE REDUCTION OF AT LEAST 65%

- RECYCLE AND/OR SALVAGE FOR REUSE A MINIMUM OF 65% OF THE NONHAZARDOUS CONSTRUCTION AND DEMOLITION WASTE IN ACCORDANCE WITH EITHER SECTION 4.408.2, 4.408.3 OR 4.408.4; OR MEET A MORE STRINGENT LOCAL CONSTRUCTION AND DEMOLITION WASTE MANAGEMENT ORDINANCE.
- DOCUMENTATION IS REQUIRED PER SECTION 4.408.5. EXCEPTIONS:
    1. EXCAVATED SOIL AND LAND-CLEARING DEBRIS.
    2. ALTERNATIVE WASTE REDUCTION METHODS DEVELOPED BY WORKING WITH LOCAL ENFORCING AGENCIES IF DIVERSION OR RECYCLE FACILITIES CAPABLE OF COMPLIANCE WITH THIS ITEM DO NOT EXIST OR ARE NOT LOCATED REASONABLY CLOSE TO THE JOBSITE.
    3. THE ENFORCING AGENCY MAY MAKE EXCEPTIONS TO THE REQUIREMENTS OF THIS SECTION WHEN ISOLATED JOBSITES ARE LOCATED IN AREAS BEYOND THE HAUL BOUNDARIES OF THE DIVERSION FACILITY.

CAL GREEN CONT.

4.408.2 CONSTRUCTION WASTE MANAGEMENT PLAN

- SUBMIT A CONSTRUCTION WASTE MANAGEMENT PLAN MEETING ITEMS 1 THROUGH 5 IN SECTION 4.408.2. PLANS SHALL BE UPDATED AS NECESSARY AND SHALL BE AVAILABLE FOR EXAMINATION DURING CONSTRUCTION.

4.408.3 WASTE MANAGEMENT COMPANY

- UTILIZE A WASTE MANAGEMENT COMPANY, APPROVED BY THE ENFORCING AGENCY, WHICH CAN PROVIDE VERIFIABLE DOCUMENTATION THAT DIVERTED CONSTRUCTION AND DEMOLITION WASTE MATERIALS MEET THE REQUIREMENTS IN SECTION 4.408.1.

4.408.4 & 4.408.4.1 WASTE STREAM REDUCTION ALTERNATIVE

- (LR) PROJECTS THAT GENERATE A TOTAL COMBINED WEIGHT OF CONSTRUCTION AND DEMOLITION WASTE DISPOSED IN LANDFILLS, WHICH DO NOT EXCEED 3.4 POUNDS PER SQUARE FOOT OF THE BUILDING AREA SHALL MEET THE MINIMUM 65% CONSTRUCTION WASTE REDUCTION REQUIREMENT IN SECTION 4.408.1.
- PROJECTS THAT GENERATE A TOTAL COMBINED WEIGHT OF CONSTRUCTION AND DEMOLITION WASTE DISPOSED IN LANDFILLS, WHICH DO NOT EXCEED 2 POUNDS PER SQUARE FOOT OF THE BUILDING AREA, SHALL MEET THE MINIMUM 65% CONSTRUCTION WASTE REDUCTION REQUIREMENT IN SECTION 4.408.1.

DIVISION 4.4 – MATERIAL CONSERVATION & RESOURCE EFFICIENCY (BUILDING MAINTENANCE & OPERATION)
4.410.1 OPERATION AND MAINTENANCE MANUAL

- AT THE TIME OF FINAL INSPECTION, A MANUAL, COMPACT DISC, WEB-BASED REFERENCE OR OTHER MEDIA ACCEPTABLE TO THE ENFORCING AGENCY WHICH COVERS 10 SPECIFIC SUBJECT AREAS SHALL BE PLACED IN THE BUILDING.

4.410.2 RECYCLING BY OCCUPANTS

- WHERE 5 OR MORE MULTIFAMILY DWELLING UNITS ARE CONSTRUCTED ON A BUILDING SITE, PROVIDE READILY ACCESSIBLE AREA(S) THAT SERVES ALL BUILDINGS ON THE SITE AND IS IDENTIFIED FOR THE DEPOSITING, STORAGE AND COLLECTION OF NON-HAZARDOUS MATERIALS FOR RECYCLING, INCLUDING (AT MINIMUM) PAPER, CORRUGATED CARDBOARD, GLASS, PLASTICS, ORGANIC WASTE, AND METALS OR MEET A LAWFULLY ENACTED LOCAL RECYCLING ORDINANCE, IF MORE RESTRICTIVE.
    1. EXCEPTION: RURAL JURISDICTIONS THAT MEET AND APPLY FOR THE EXEMPTION IN PUBLIC RESOURCES CODE SECTION 42649.82 (A)(2)(A) ET. SEQ. ARE NOT REQUIRED TO COMPLY WITH THE ORGANIC WASTE PORTION OF THIS SECTION.

DIVISION 4.5 – ENVIRONMENTAL QUALITY (FIREPLACES)
4.503.1 GENERAL

- ANY INSTALLED GAS FIREPLACE SHALL BE A DIRECT-VENT SEALED-COMBUSTION TYPE. ANY INSTALLED WOODSTOVE OR PELLET STOVE SHALL COMPLY WITH U.S. EPA NEW SOURCE PERFORMANCE STANDARDS (NSPS) EMISSION LIMITS AS APPLICABLE, AND SHALL HAVE A PERMANENT LABEL INDICATING THEY ARE CERTIFIED TO MEET THE EMISSION LIMITS. WOODSTOVES, PELLET STOVES AND FIREPLACES SHALL ALSO COMPLY WITH ALL APPLICABLE LOCAL ORDINANCES.

DIVISION 4.5 – ENVIRONMENTAL QUALITY (POLLUTANT CONTROL)
4.504.1 PROTECTION DURING CONSTRUCTION

- AT THE TIME OF ROUGH INSTALLATION, DURING STORAGE ON THE CONSTRUCTION SITE AND UNTIL FINAL STARTUP OF THE HEATING, COOLING AND VENTILATING EQUIPMENT, ALL DUCT AND OTHER RELATED AIR INTAKE AND DISTRIBUTION COMPONENT OPENINGS SHALL BE COVERED. TAPE, PLASTIC, SHEETMETAL OR OTHER METHODS ACCEPTABLE TO THE ENFORCING AGENCY TO REDUCE THE AMOUNT OF WATER, DUST AND DEBRIS ENTERING THE SYSTEM MAY BE USED.

4.504.2.1 ADHESIVES, SEALANTS AND CAULKS

- ADHESIVES, SEALANTS AND CAULKS USED ON THE PROJECT SHALL MEET THE REQUIREMENTS OF THE FOLLOWING STANDARDS UNLESS MORE STRINGENT LOCAL OR REGIONAL AIR POLLUTION OR AIR QUALITY MANAGEMENT DISTRICT RULES APPLY:
    1. ADHESIVES, ADHESIVE BONDING PRIMERS, ADHESIVE PRIMERS, SEALANTS, SEALANT PRIMERS, AND CAULKS SHALL COMPLY WITH LOCAL OR REGIONAL AIR POLLUTION CONTROL OR AIR QUALITY MANAGEMENT DISTRICT RULES WHERE APPLICABLE, OR SCAQMD RULE 1168 VOC LIMITS, AS SHOWN IN TABLES 4.504.1 OR 4.504.2, AS APPLICABLE. SUCH PRODUCTS SHALL ALSO COMPLY WITH RULE 1168 PROHIBITION ON THE USE OF CERTAIN TOXIC COMPOUNDS (CHLOROFORM, ETHYLENE DICHLORIDE, METHYLENE CHLORIDE, PERCHLOROETHYLENE AND TRICHLOROENTYLENE), EXCEPT FOR AEROSOL PRODUCTS AS SPECIFIED IN SUBSECTION 2 BELOW.
    2. AEROSOL ADHESIVES, AND SMALLER UNIT SIZES OF ADHESIVES, AND SEALANT OR CAULKING COMPOUNDS (IN UNITS OF PRODUCT, LESS PACKAGING, WHICH DO NOT WEIGH MORE THAN 1 POUND AND DO NOT CONSIST OF MORE THAN 16 FLUID OUNCES) SHALL COMPLY WITH STATEWIDE VOC STANDARDS AND OTHER REQUIREMENTS, INCLUDING PROHIBITIONS ON USE OF CERTAIN TOXIC COMPOUNDS, OF THE CALIFORNIA CODE OF REGULATIONS (CCR), TITLE 17, COMMENCING WITH SECTION 94507.

4.504.2.2 PAINTS AND COATINGS

- ARCHITECTURAL PAINTS AND COATINGS SHALL COMPLY WITH VOC LIMITS IN TABLE 1 OF THE AIR RESOURCES BOARD ARCHITECTURAL SUGGESTED CONTROL MEASURE, AS SHOWN IN TABLE 4.504.3, UNLESS MORE STRINGENT LOCAL LIMITS APPLY.
- THE VOC CONTENT LIMIT FOR COATINGS THAT DO NOT MEET THE DEFINITIONS FOR THE SPECIALTY COATINGS CATERGORIES LISTED IN TABLE 4.504.3 SHALL BE DETERMINED BY CLASSIFYING THE COATING AS FLAT, NONFLAT, OR NONFLAT-HIGH GLOSS COATING, BASED ON ITS GLOSS, AS DEFINED IN SUBSECTIONS 4.21, 4.36, AND 4.37, OF THE 2007 CALIFORNIA AIR RESOURCES BOARD, SUGGESTED CONTROL MEASURE, AND THE CORRESPONDING FLAT, NONFLAT, OR NONFLAT-HIGH GLOSS VOC LIMIT IN TABLE 4.504.3 SHALL APPLY.

4.504.2.3 AEROSOL PAINTS AND COATINGS

- AEROSOL PAINTS AND COATINGS SHALL MEET THE PRODUCT-WEIGHTED MIR LIMITS FOR ROC IN SECTION 94522(A)(2) AND OTHER REQUIREMENTS, INCLUDING PROHIBITIONS ON USE OF CERTAIN TOXIC COMPOUNDS AND OZONE DEPLETING SUBSTANCES, IN SECTION 94522(E)(1) AND (F)(1) OF THE CCR, TITLE 17, COMMENCING WITH SECTION 94520; AND IN AREAS UNDER THE JURISDICTION OF THE BAY AREA AIR QUALITY MANAGEMENT DISTRICT SHALL ADDITIONALLY COMPLY WITH THE PERCENT VOC BY WEIGHT OF PRODUCT LIMITS OF REGULATION 8, RULE 49.

4.504.3 CARPET SYSTEMS

- CARPET INSTALLED IN THE BUILDING INTERIOR SHALL MEET THE TESTING AND PRODUCT REQUIREMENTS OF 1 OF THE FOLLOWING:

CAL GREEN CONT.

1. CARPET AND RUG INSTITUTE'S GREEN LABEL PLUS PROGRAM.
2. CALIFORNIA DEPARTMENT OF PUBLIC HEALTH, "STANDARD METHOD FOR THE TESTING AND EVALUATION OF VOLATILE ORGANIC CHEMICAL EMISSIONS FROM INDOOR SOURCES USING ENVIRONMENTAL CHAMBERS," VERSION 1.1, FEBRUARY 2010 (ALSO KNOWN AS SPECIFICATION 01350)
3. NSF/ANSI 140 AT THE GOLD LEVEL
4. SCIENTIFIC CERTIFICATIONS SYSTEMS INDOOR ADVANTAGE™ GOLD

4.504.3.1 CARPET CUSHION

- CARPET CUSHION INSTALLED IN THE BUILDING INTERIOR SHALL MEET THE REQUIREMENTS OF THE CARPET AND RUG INSTITUTE'S GREEN LABEL PLUS PROGRAM.

4.504.3.2 CARPET ADHESIVE

- CARPET ADHESIVES SHALL MEET THE REQUIREMENTS OF TABLE 4.504.1.

4.504.4 RESILIENT FLOORING SYSTEMS

- WHERE RESILIENT FLOORING IS INSTALLED, AT LEAST 80% OF FLOOR AREA RECEIVING RESILIENT FLOORING SHALL COMPLY WITH ONE OR MORE OF THE FOLLOWING:
    1. PRODUCTS COMPLIANT WITH THE CALIFORNIA DEPARTMENT OF PUBLIC HEALTH, "STANDARD METHOD FOR THE TESTING AND EVALUATION OF VOLATILE ORGANIC CHEMICAL EMISSIONS FROM INDOOR SOURCES USING ENVIRONMENTAL CHAMBERS," VERSION 1.1, FEBRUARY 2010 (ALSO KNOWN AS SPECIFICATION 01350), CERTIFIED AS A CHPS LOW-EMITTING MATERIAL IN THE COLLABORATIVE FOR HIGH PERFORMANCE SCHOOLS (CHPS) HIGH PERFORMANCE PRODUCTS DATABASE
    2. PRODUCTS CERTIFIED UNDER UL GREENGUARD GOLD (FORMERLY THE GREENGUARD CHILDREN & SCHOOLS PROGRAM)
    3. CERTIFICATION UNDER THE RESILIENT FLOOR COVERING INSTITUTE (RFCI) FLOORSCORE PROGRAM.
    4. MEET THE CALIFORNIA DEPARTMENT OF PUBLIC HEALTH, "STANDARD METHOD FOR THE TESTING AND EVALUATION OF VOLATILE ORGANIC CHEMICAL EMISSIONS FROM INDOOR SOURCES USING ENVIRONMENTAL CHAMBERS," VERSION 1.1, FEBRUARY 2010 (ALSO KNOWN AS SPECIFICATION 01350)

4.504.5 COMPOSITE WOOD PRODUCTS

- HARDWOOD PLYWOOD, PARTICLEBOARD AND MEDIUM DENSITY FIBERBOARD COMPOSITE WOOD PRODUCTS USED ON THE INTERIOR OR EXTERIOR OF THE BUILDING SHALL MEET THE REQUIREMENTS FOR FORMALDEHYDE AS SPECIFIED IN THE AIR RESOURCES BOARD'S AIR TOXICS CONTROL MEASURE FOR COMPOSITE WOOD (17 CCR 93120 ET. SEQ.), AS SHOWN IN TABLE 4.504.5. DOCUMENTATION IS REQUIRED PER SECTION 4.504.5.1.
- DEFINITION OF COMPOSITE WOOD PRODUCTS: COMPOSITE WOOD PRODUCTS INCLUDE HARDWOOD PLYWOOD, PARTICLEBOARD, AND MEDIUM DENSITY FIBERBOARD. "COMPOSITE WOOD PRODUCTS" DO NOT INCLUDE HARDBOARD, STRUCTURAL PLYWOOD, STRUCTURAL PANELS, STRUCTURAL COMPOSITE LUMBER, ORIENTED STRAND BOARD, GLUED LAMINATED TIMBER, PREFABRICATED WOOD I-JOISTS, OR FINGER-JOINED LUMBER, ALL AS SPECIFIED IN CCR, TITLE 17, SECTION 93120.1(A).

4.504.5.1 DOCUMENTATION

- VERIFICATION OF COMPLIANCE SHALL BE PROVIDED AS REQUESTED BY THE ENFORCING AGENCY, AND AS REQUIRED IN SECTION 4.504.5.1.

DIVISION 4.5 – ENVIRONMENTAL QUALITY (INTERIOR MOISTURE CONTROL)
4.505.2 CONCRETE SLAB FOUNDATIONS

- CONCRETE SLAB FOUNDATIONS OR CONCRETE SLAB-ON-GROUND FLOORS REQUIRED TO HAVE A VAPOR RETARDER BY THE CALIFORNIA BUILDING CODE, CHAPTER 19, OR THE CALIFORNIA RESIDENTIAL CODE, CHAPTER 5, RESPECTIVELY, SHALL ALSO COMPLY WITH THIS SECTION.

4.505.2.1 CAPILLARY BREAK

- A CAPILLARY BREAK SHALL BE INSTALLED IN COMPLIANCE WITH AT LEAST 1 OF THE FOLLOWING:
    1. A 4-INCH THICK BASE OF 1/2-INCH OR LARGER CLEAN AGGREGATE SHALL BE PROVIDED WITH A VAPOR RETARDER IN DIRECT CONTACT WITH CONCREATE AND A CONCRETE MIX DESIGN WHICH WILL ADDRESS BLEEDING, SHRINKAGE AND CURLING SHALL BE USED. FOR ADDITIONAL INFORMATION, SEE AMERICAN CONCRETE INSTITUTE, ACI 302.2R-06.
    2. OTHER EQUIVALENT METHODS APPROVED BY THE ENFORCING AGENCY.
    3. A SLAB DESIGN SPECIFIED BY A LICENSED DESIGN PROFESSIONAL.

4.505.3 MOISTURE CONTENT OF BUILDING MATERIALS

- BUILDING MATERIALS WITH VISIBLE SIGNS OF WATER DAMAGE SHALL NOT BE INSTALLED. WALL AND FLOOR FRAMING SHALL NOT BE ENCLOSED WHEN THE FRAMING MEMBERS EXCEED 19% MOISTURE CONTENT. MOISTURE CONTENT SHALL BE VERIFIED IN COMPLIANCE WITH THE FOLLOWING:
    1. MOISTURE CONTENT SHALL BE DETERMINED WITH EITHER A PROBE-TYPE OR A CONTACT-TYPE MOISTURE METER. EQUIVALENT MOISTURE VERIFICATION METHODS MAY BE APPROVED BY THE ENFORCING AGENCY AND SHALL SATISFY REQUIREMENTS IN SECTION 101.8.
    2. MOISTURE READINGS SHALL BE TAKEN AT A POINT 2 FEET TO 4 FEET FROM THE GRADE-STAMPED END OF EACH PIECE TO BE VERIFIED.
    3. AT LEAST 3 RANDOM MOISTURE READINGS SHALL BE PERFORMED ON WALL AND FLOOR FRAMING WITH DOCUMENTATION ACCEPTABLE TO THE ENFORCING AGENCY PROVIDED AT THE TIME OF APPROVAL TO ENCLOSE THE WALL AND FLOOR FRAMING. INSULATION PRODUCTS WHICH ARE VISIBLY WET OR HAVE A HIGH MOISTURE CONTENT SHALL BE REPLACED OR ALLOWED TO DRY PRIOR TO ENCLOSURE IN WALL OR FLOOR CAVITIES. MANUFACTURERS' DRYING RECOMMENDATIONS SHALL BE FOLLOWED FOR WET-APPLIED INSULATION PRODUCTS PRIOR TO ENCLOSURE.

DIVISION 4.5 – ENVIRONMENTAL QUALITY (INDOOR AIR QUALITY & EXHAUST)
4.506.1 BATHROOM EXHAUST FANS

- EACH BATHROOM SHALL BE MECHANICALLY VENTILATED AND SHALL COMPLY WITH THE FOLLOWING:
    1. FANS SHALL BE ENERGY STAR COMPLIANT AND BE DUCTED TO TERMINATE OUTSIDE THE BUILDING.
    2. UNLESS FUNCTIONING AS A COMPONENT OF A WHOLE HOUSE VENTILATION SYSTEM, FANS MUST BE CONTROLLED BY A HUMIDITY CONTROL.

CAL GREEN CONT.

A. HUMIDITY CONTROLS SHALL BE CAPABLE OF MANUAL OR AUTOMATIC ADJUSTMENT BETWEEN A RELATIVE HUMIDITY RANGE OF LESS THAN 50% TO A MAXIMUM OF 80%.
B. A HUMIDITY CONTROL MAY BE A SEPARATE COMPONENT TO THE EXHAUST FAN AND IS NOT REQUIRED TO BE INTEGRAL OR BUILT-IN.

NOTE: FOR CALGREEN A "BATHROOM" IS A ROOM WHICH CONTAINS A BATHTUB, SHOWER, OR TUB/SHOWER COMBINATION. FANS OR MECHANICAL VENTILATION IS REQUIRED IN EACH BATHROOM.

DIVISION 4.5 – ENVIRONMENTAL QUALITY (ENVIRONMENTAL COMFORT)
4.507.2 HEATING AND AIR CONDITIONING SYSTEM DESIGN

- HEATING AND AIR CONDITIONING SYSTEMS SHALL BE SIZED, DESIGNED, AND EQUIPMENT SELECTED USING THE FOLLOWING METHODS:
    1. THE HEAT LOSS AND HEAT GAIN IS ESTABLISHED ACCORDING TO ANSI/ACCA 2 MANUAL J – 2011 (RESIDENTIAL LOAD CALCULATION), ASHRAE HANDBOOKS OR OTHER EQUIVALENT DESIGN SOFTWARE OR METHODS.
    2. DUCT SYSTEMS ARE SIZED ACCORDING TO ANSI/ACCA 1 MANUAL D – 2014 (RESIDENTIAL DUCT SYSTEMS), ASHRAE HANDBOOKS OR OTHER EQUIVALENT DESIGN SOFTWARE OR METHODS.
    3. SELECT HEATING AND COOLING EQUIPMENT ACCORDING TO ANSI/ACCA 3 MANUAL S – 2014 (RESIDENTIAL EQUIPMENT SELECTION) OR OTHER EQUIVALENT DESIGN SOFTWARE OR METHODS.

EXCEPTION: USE OF ALTERNATE DESIGN TEMPERATURES NECESSARY TO ENSURE THE SYSTEMS FUNCTIONS ARE ACCEPTABLE.

CHAPTER 7 – INSTALLER & SPECIAL INSPECTOR QUALIFICATION (QUALIFICATIONS, VERIFICATIONS)
702.1 INSTALLER TRAINING

- HVAC SYSTEM INSTALLERS SHALL BE TRAINED AND CERTIFIED IN THE PROPER INSTALLATION OF HVAC SYSTEMS AND EQUIPMENT BY A RECOGNIZED TRAINING OR CERTIFICATION PROGRAM. EXAMPLES OF ACCEPTABLE HVAC TRAINING AND CERTIFICATION PROGRAMS INCLUDE BUT ARE NOT LIMITED TO THE FOLLOWING:
    1. STATE CERTIFIED APPRENTICESHIP PROGRAMS.
    2. PUBLIC UTILITY TRAINING PROGRAMS.
    3. TRAINING PROGRAMS SPONSORED BY TRADE, LABOR OR STATEWIDE ENERGY CONSULTING OR VERIFICATION ORGANIZATIONS.
    4. PROGRAMS SPONSORED BY MANUFACTURING ORGANIZATIONS.
    5. OTHER PROGRAMS ACCEPTABLE TO THE ENFORCING AGENCY.

702.2 SPECIAL INSPECTION

- SPECIAL INSPECTORS MUST BE QUALIFIED AND ABLE TO DEMONSTRATE COMPETENCE TO THE ENFORCING AGENCY IN THE DISCIPLINE IN WHICH THEY ARE INSPECTING.

703.1 DOCUMENTATION

- DOCUMENTATION OF COMPLIANCE SHALL INCLUDE, BUT IS NOT LIMITED TO, CONSTRUCTION DOCUMENTS, PLANS, SPECIFICATIONS, BUILDER OR INSTALLER CERTIFICATION, INSPECTION REPORTS, OR OTHER METHODS ACCEPTABLE TO THE LOCAL ENFORCING AGENCY. OTHER SPECIFIC DOCUMENTATION OR SPECIAL INSPECTIONS NECESSARY TO VERIFY COMPLIANCE ARE SPECIFIED IN PROPRIATE SECTIONS OF CALGREEN.

WRITTEN DIMENSIONS SHALL HAVE PRECEDENCE OVER SCALE DIMENSIONS. contractors and home owner builders shall verify and be responsible for dimensions and conditions of the project. DR Designs must be notified of any variation from the dimensions, conditions and specifications appearing on this plan.

DR DESIGNS
(530) 559 - 2539

NEW CONSTRUCTION

632 ZION STREET
NEVADA CITY, CA

CALGreen
Compliances

DUSTIN RUCKMAN

REVISIONS	
1	
2	

APN# 005-230-010-000

19-0076 12/27/2019

AG1

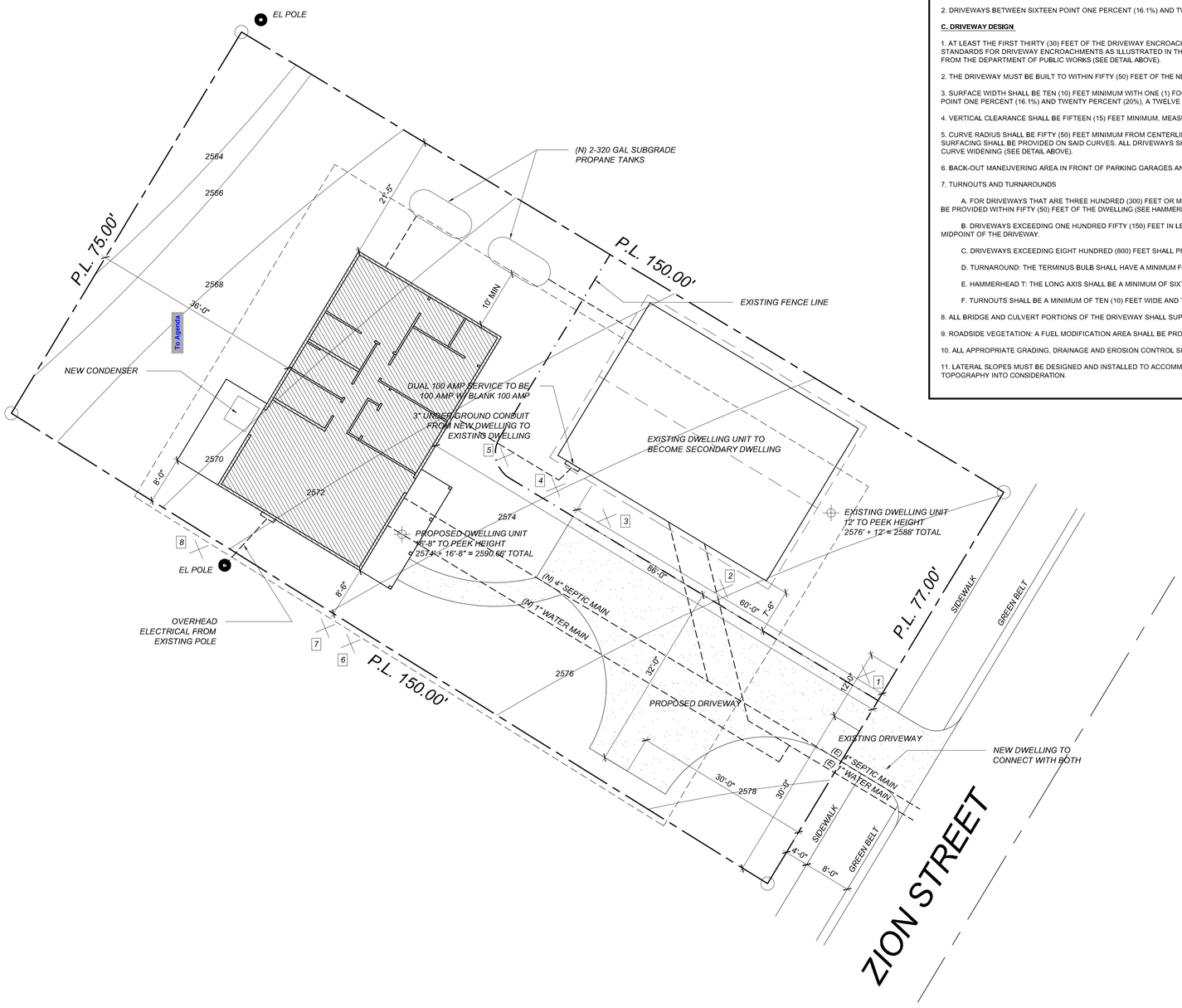

PRIVATE DRIVEWAY CONSTRUCTION STANDARDS (SEC. L-XVI 3.2 LUDC)

ALL NEWLY CONSTRUCTED SINGLE FAMILY RESIDENCES SHALL BE SERVED BY A DRIVEWAY. ANY SUBDIVISION PROPOSING THAT TWO (2) LOTS BE SERVED BY A COMMON DRIVEWAY SHALL HAVE THE DRIVEWAY CONSTRUCTED PRIOR TO THE MAP RECORDATION. THE DRIVEWAY SHALL MEET THE FOLLOWING CONSTRUCTION STANDARDS AS ADMINISTERED BY THE BUILDING DEPARTMENT THROUGH A DRIVEWAY PERMIT WHEN A GRADING PERMIT IS NOT APPLICABLE. STANDARDS DO NOT APPLY TO DRIVEWAYS THAT ARE LESS THAN FIFTY (50) FEET OR LESS IN LENGTH.

A. DRIVEWAY GRADE

1. BELOW 4,000 FEET ELEVATION, DRIVEWAY GRADE SHALL NOT EXCEED TWENTY PERCENT (20%) UNLESS A PETITION FOR EXCEPTIONS IS SUPPORTED BY THE COUNTY FIRE MARSHAL OR HIS OR HER APPOINTED DESIGNEE AND GRANTED BY THE PLANNING AGENCY HAVING JURISDICTION OVER THE LAND USE ENTITLEMENT. NOTWITHSTANDING SEC. L-XVI 2.6, EXCEPTIONS TO STANDARDS, THERE SHALL BE NO EXCEPTIONS GRANTED FOR GRADES IN EXCESS OF TWENTY-FIVE PERCENT (25%).

2. AT OR ABOVE 4,000 FEET ELEVATION, DRIVEWAY GRADE SHALL NOT EXCEED SIXTEEN PERCENT (16%) MAXIMUM. NOTWITHSTANDING SEC. L-XVI 2.6, EXCEPTIONS TO STANDARDS, THERE SHALL BE NO EXCEPTIONS GRANTED FOR GRADES IN EXCESS OF SIXTEEN PERCENT (16%) WHERE ELEVATIONS RANGE ABOVE 4,000 FEET.

B. DRIVEWAY SURFACE

1. DRIVEWAY SURFACES SHALL BE CAPABLE OF SUPPORTING A 40,000 POUND LEGALLY-LOADED VEHICLE AS OUTLINED BELOW:

A. DRIVEWAYS AND SEGMENTS THEREOF THAT ARE BETWEEN ZERO (0%) AND SIXTEEN PERCENT (16%) GRADE SHALL BE CAPABLE OF SUPPORTING A 40,000 POUND LEGALLY LOADED VEHICLE AS CERTIFIED BY A REGISTERED CIVIL ENGINEER, OR A MINIMUM OF FOUR (4) INCH CLASS II AGGREGATE BASE (SEE DETAIL ABOVE).

B. DRIVEWAYS AND SEGMENTS THEREOF THAT ARE SIXTEEN POINT ONE PERCENT (16.1%) GRADE AND ABOVE, SHALL BE DESIGNED AND CERTIFIED BY A REGISTERED CIVIL ENGINEER. PRIOR TO FOUNDATION INSPECTION, THE ENGINEER SHALL PROVIDE STAMPED AND SIGNED WRITTEN VERIFICATION TO THE COUNTY FIRE MARSHAL OR HIS OR HER APPOINTED DESIGNEE THAT THE ROUGH GRADE COMPLIES WITH THE SITE PLAN. PRIOR TO, OR CONCURRENT WITH, FINAL INSPECTION, THE ENGINEER SHALL PROVIDE STAMPED AND SIGNED WRITTEN VERIFICATION THAT THE FINAL DRIVEWAY COMPLIES WITH THE SITE PLAN.

2. DRIVEWAYS BETWEEN SIXTEEN POINT ONE PERCENT (16.1%) AND TWENTY PERCENT (20.0%) GRADE SHALL BE ENGINEERED WITH AN ALL-WEATHER SURFACE.

C. DRIVEWAY DESIGN

1. AT LEAST THE FIRST THIRTY (30) FEET OF THE DRIVEWAY ENCROACHMENT FROM THE EDGE OF PAVEMENT OF THE PRIMARY ROADWAY SHALL CONFORM TO THE DESIGN STANDARDS FOR DRIVEWAY ENCROACHMENTS AS ILLUSTRATED IN THE NEVADA COUNTY DEPARTMENT OF PUBLIC WORKS STANDARDS DRAWINGS, AVAILABLE FROM THE DEPARTMENT OF PUBLIC WORKS (SEE DETAIL ABOVE).

2. THE DRIVEWAY MUST BE BUILT TO WITHIN FIFTY (50) FEET OF THE NEAREST POINT OF EACH DWELLING UNIT.

3. SURFACE WIDTH SHALL BE TEN (10) FEET MINIMUM WITH ONE (1) FOOT SHOULDERS FOR DRIVEWAY GRADES UP TO SIXTEEN PERCENT (16%). FOR GRADES BETWEEN SIXTEEN POINT ONE PERCENT (16.1%) AND TWENTY PERCENT (20%), A TWELVE (12) FOOT MINIMUM SURFACE WIDTH WITH ONE (1) FOOT SHOULDERS IS REQUIRED.

4. VERTICAL CLEARANCE SHALL BE FIFTEEN (15) FEET MINIMUM, MEASURED FROM THE OUTSIDE EDGE OF THE SHOULDER.

5. CURVE RADIUS SHALL BE FIFTY (50) FEET MINIMUM FROM CENTERLINE. FOR ALL DRIVEWAY RADII LESS THAN ONE HUNDRED (100) FEET, AN ADDITIONAL FOUR (4) FEET OF SURFACING SHALL BE PROVIDED ON SAID CURVES. ALL DRIVEWAYS SHALL ALSO COMPLY WITH LAND USE AND DEVELOPMENT CODE SECTION L-XVII 3.4.F, DESIGN GEOMETRICS: CURVE WIDENING (SEE DETAIL ABOVE).

6. BACK-OUT MANEUVERING AREA IN FRONT OF PARKING GARAGES AND OPEN PARKING STALLS SHALL BE TWENTY-FOUR (24) FEET.

7. TURNOUTS AND TURNAROUNDS

A. FOR DRIVEWAYS THAT ARE THREE HUNDRED (300) FEET OR MORE IN LENGTH, A TURNAROUND OR HAMMERHEAD WITH A MAXIMUM GRADE OF TWELVE (12) PERCENT SHALL BE PROVIDED WITHIN FIFTY (50) FEET OF THE DWELLING (SEE HAMMERHEAD DETAIL ABOVE).

B. DRIVEWAYS EXCEEDING ONE HUNDRED FIFTY (150) FEET IN LENGTH, BUT LESS THAN EIGHT HUNDRED (800) FEET IN LENGTH, SHALL PROVIDE A TURNOUT NEAR THE MIDPOINT OF THE DRIVEWAY.

C. DRIVEWAYS EXCEEDING EIGHT HUNDRED (800) FEET SHALL PROVIDE TURNOUTS NO MORE THAN FOUR HUNDRED (400) FEET APART.

D. TURNAROUND: THE TERMINUS BULB SHALL HAVE A MINIMUM FORTY (40) FOOT RADIUS.

E. HAMMERHEAD T: THE LONG AXIS SHALL BE A MINIMUM OF SIXTY (60) FEET AND THE LEG SHALL BE A MINIMUM OF FORTY (40) FEET (SEE DETAIL ABOVE).

F. TURNOUTS SHALL BE A MINIMUM OF TEN (10) FEET WIDE AND THIRTY (30) FEET LONG WITH A MINIMUM TWENTY-FIVE (25) FOOT TAPER ON EACH END.

8. ALL BRIDGE AND CULVERT PORTIONS OF THE DRIVEWAY SHALL SUPPORT A 40,000 POUND LEGALLY LOADED VEHICLE.

9. ROADSIDE VEGETATION: A FUEL MODIFICATION AREA SHALL BE PROVIDED FOR A DISTANCE OF 10 FEET ON EACH SIDE OF THE DRIVEWAY.

10. ALL APPROPRIATE GRADING, DRAINAGE AND EROSION CONTROL SHALL BE INCLUDED PURSUANT TO CHAPTER V OF THE LAND USE AND DEVELOPMENT CODE.

11. LATERAL SLOPES MUST BE DESIGNED AND INSTALLED TO ACCOMMODATE A MINIMUM TWO PERCENT (2%) AND MAXIMUM FOUR PERCENT (4%) CROSS SLOPES, TAKING TOPOGRAPHY INTO CONSIDERATION.

SITE PLAN

SCALE 1"=10'

NOTES

COMPLIANCE:

NO STRUCTURE OR LAND SHALL HEREAFTER BE CONSTRUCTED, LOCATED, EXTENDED, CONVERTED OR ALTERED WITHOUT FULL COMPLIANCE WITH THE TERMS OF THIS CHAPTER AND OTHER APPLICABLE REGULATIONS OF THE LAND USE AND DEVELOPMENT CODE. VIOLATION OF THE REQUIREMENTS (INCLUDING VIOLATIONS OF CONDITIONS AND SAFEGUARDS) SHALL CONSTITUTE A MISDEMEANOR. NOTHING HEREIN SHALL PREVENT THE BOARD OF SUPERVISORS FROM TAKING SUCH LAWFUL ACTION AS NECESSARY TO PREVENT OR REMEDY ANY VIOLATION.

VEGETATION MANAGEMENT:

(CRC 337.1.5) ALL GRASS WITHIN 30'-0" OF STRUCTURES TO BE ELIMINATED, OR IGNITION RESISTANT WITH ALL TREES WITHIN 100'-0" TRIMMED UP TO 10'-0".

EROSION CONTROL:

- MEASURES TO BE USED PER NEVADA COUNTY LAND USE ORDINANCE LV 13-14
- EROSION AND SEDIMENT CONTROL MEASURES MUST REMAIN FUNCTIONAL AND BE MAINTAINED THROUGHOUT THE WINTER SEASON. FAILURE TO ADEQUATELY MAINTAIN EROSION AND SEDIMENT CONTROL MEASURES CONSTITUTE A VIOLATION OF THE ISSUED BUILDING OR OTHER PERMIT. MAINTAIN POSITIVE DRAINAGE AWAY FROM ALL STRUCTURES. SEED AND COVER ALL DISTURBED SOIL WITH MULCH.

TREE CALLOUT

1. 10" CEDAR
2. 15" WALNUT
3. 9" WALNUT
4. 20" WALNUT (SICK)
5. 6" HOLLY
6. 8" WALNUT
7. 12" WALNUT
8. 28" CEDAR

GENERAL COMMENTS

- EXACT LOCATION OF NEW HOME PLACEMENT MAY VARY. SITE VERIFICATIONS WILL BE NESSISARY FOR THE PLACEMENT OF STRUCTURE NOT TO BE INPEDED BY BUT NOT LIMITED TO: ROCKS, TREES, SLOPAGE, AND SMALL UNLOCATED STRUCTURES.
- EXISTING DRIVEWAY TO CONFORM WITH NEVADA COUNTYS PRIVATE DRIVEWAY CONSTRUCTION STANDARDS.
- THE GROUND IMMEDIATELY ADJACENT TO THE FOUNDATION SHALL BE SLOPED AWAY FROM BUILDING AT A SLOPE OF NOT LESS THAN 6" (5% SLOPE) IN THE FIRST 40FT MEASURED PERPENDICULAR TO THE FACE OF THE WALL. IMPERVIOUS SURFACES WITHIN 10 FT OF BUILDING SHALL BE SLOPED A MINIMUM OF 2% AWAY FROM BUILDING.

WRITTEN DIMENSIONS SHALL HAVE PRECEDENCE OVER SCALE DIMENSIONS. contractors and home owner builders shall verify and be responsible for dimensions and conditions of the project. DR Designs must be notified of any variation from the dimensions, conditions and specifications appearing on this plan.

DR DESIGNS
(530) 559 - 2539

NEW CONSTRUCTION
632 ZION STREET
NEVADA CITY, CA

SITE PLAN

DUSTIN RUCKMAN

REVISIONS

1		
2		

APN# 005-230-010-000

19-0076	12/30/2019

A2

STAPLE HERE

GENERAL INFORMATION

01	Project Name	632 Zion Residence			
02	Calculation Description	Title 24 Analysis			
03	Project Location	632 Zion Street			
04	City	Nevada City	05	Standards Version	Compliance 2017
06	Zip Code	95959	07	Compliance Manager Version	BEMCmpMgr 2016.3.1 (1149)
08	Climate Zone	CZ11	09	Software Version	EnergyPro 7.2
10	Building Type	Single Family	11	Front Orientation (deg/Cardinal)	135
12	Project Scope	Newly Constructed	13	Number of Dwelling Units	1
14	Total Cond. Floor Area (ft²)	1288	15	Number of Zones	1
16	Slab Area (ft²)	0	17	Number of Stories	1
18	Addition Cond. Floor Area(ft²)	n/a	19	Natural Gas Available	No
20	Addition Slab Area (ft²)	n/a	21	Glazing Percentage (%)	15.9%

COMPLIANCE RESULTS

01	Building Complies with Computer Performance
02	This building incorporates features that require field testing and/or verification by a certified HERS rater under the supervision of a CEC-approved HERS provider.
03	This building incorporates one or more Special Features shown below

ENERGY USE SUMMARY

04	05	06	07	08
Energy Use (kTDV/ft²-yr)	Standard Design	Proposed Design	Compliance Margin	Percent Improvement
Space Heating	30.16	23.17	6.99	23.2%
Space Cooling	50.84	49.10	1.74	3.4%
IAQ Ventilation	1.60	1.60	0.00	0.0%
Water Heating	25.08	23.03	2.05	8.2%
Photovoltaic Offset	----	0.00	0.00	----
Compliance Energy Total	107.68	96.90	10.78	10.0%

ENERGY DESIGN RATING

Energy Design Rating (EDR) is an alternate way to express the energy performance of a building using a scoring system where 100 represents the energy performance of the Residential Energy Services (RESNET) reference home characterization of the 2006 International Energy Conservation Code (IECC) with California modeling assumptions. A score of zero represents the energy performance of a building that combines high levels of energy efficiency with renewable generation to"zero out" its TDV energy. Because EDR includes consideration of components not regulated by Title 24, Part 6 (such as domestic appliances and consumer electronics), it is not used to show compliance with Part 6 but may instead be used by local jurisdictions pursuing local ordinances under Title 24, Part 11 (CALGreen).
As a Standard Design building under the 2016 Building Energy Efficiency Standards is significantly more efficient than the baseline EDR building, the EDR of the Standard Design building is provided for Information. Similarly, the EDR score of the Proposed Design is provided separately from the EDR value of installed PV so that the effects of efficiency and renewable energy can both be seen

EDR of Standard Efficiency	EDR of Proposed Efficiency	EDR Value of Proposed PV + Battery	Final Proposed EDR
49.9	46.9	0.0	46.9

- ☐ Design meets Tier 1 requirement of 15% or greater code compliance margin (CALGreen A4.203.1.2.1) and QII verification prerequisite.
- ☐ Design meets Tier 2 requirement of 30% or greater code compliance margin (CALGreen A4.203.1.2.2) and QII verification prerequisite.
- ☐ Design meets Zero Net Energy (ZNE) Design Designation requirement for Single Family in climate zone CZ11 (CALGreen A4.203.1.2.3) including on-site photovoltaic (PV) renewable energy generation sufficient to achieve a Final Energy Design Rating (EDR) of zero or less. The PV System and QII must be verified.

Notes:
- Excess PV Generation EDR Credit: Bypassing PV size limit may violate Net Energy Metering (NEM) rules

REQUIRED SPECIAL FEATURES

The following are features that must be installed as condition for meeting the modeled energy performance for this computer analysis.
- Insulation below roof deck
- Ducts in crawl space

HERS FEATURE SUMMARY

The following is a summary of the features that must be field-verified by a certified HERS Rater as a condition for meeting the modeled energy performance for this computer analysis. Additional detail is provided in the building components tables below.

Building-level Verifications:
- High quality insulation installation (QII)
- IAQ mechanical ventilation

Cooling System Verifications:
- Minimum Airflow
- Verified EER
- Verified SEER
- Fan Efficacy Watts/CFM

HVAC Distribution System Verifications:
- Duct Sealing

Domestic Hot Water System Verifications:
- Pipe Insulation, All Lines

BUILDING - FEATURES INFORMATION

01	02	03	04	05	06	07
Project Name	Conditioned Floor Area (ft²)	Number of Dwelling Units	Number of Bedrooms	Number of Zones	Number of Ventilation Cooling Systems	Number of Water Heating Systems
632 Zion Residence	1288	1	3	1	0	1

ZONE INFORMATION

01	02	03	04	05	06	07
Zone Name	Zone Type	HVAC System Name	Zone Floor Area (ft²)	Avg. Ceiling Height	Water Heating System 1	Water Heating System 2
1st fl zone	Conditioned	HVACS1	1288	8	DHW Sys 1	n/a

OPAQUE SURFACES

01	02	03	04	05	06	07	08
Name	Zone	Construction	Azimuth	Orientation	Gross Area (ft²)	Window & Door Area (ft²)	Tilt (deg)
Exterior Front Wall	1st fl zone	R-21 Wall	135	Front	414	125	90
Exterior Left Wall	1st fl zone	R-21 Wall	225	Left	252	8	90
Exterior Rear Wall	1st fl zone	R-21 Wall	315	Back	414	62.1	90
Exterior Right Wall	1st fl zone	R-21 Wall	45	Right	252	30	90
Roof	1st fl zone	R-38 HP Attic Option B	n/a	n/a	1288	n/a	n/a
Raised 1st Floor	1st fl zone	R-19 Floor Crawlspace	n/a	n/a	1288	n/a	n/a

ATTIC

01	02	03	04	05	06	07	08
Name	Construction	Type	Roof Rise	Roof Reflectance	Roof Emittance	Radiant Barrier	Cool Roof
Attic 1st fl zone	Attic Roof1st fl zone	Ventilated	7	0.1	0.85	No	No

FENESTRATION / GLAZING

01	02	03	04	05	06	07	08	09	10
Name	Type	Surface (Orientation-Azimuth)	Width (ft)	Height (ft)	Multiplier	Area (ft²)	U-factor	SHGC	Exterior Shading
Front Window	Window	Exterior Front Wall (Front-135)	----	----	1	105.0	0.29	0.19	Insect Screen (default)
Left Window	Window	Exterior Left Wall (Left-225)	----	----	1	8.0	0.29	0.19	Insect Screen (default)
Rear Window	Window	Exterior Rear Wall (Back-315)	----	----	1	62.1	0.29	0.19	Insect Screen (default)
Right Window	Window	Exterior Right Wall (Right-45)	----	----	1	30.0	0.29	0.19	Insect Screen (default)

OPAQUE DOORS

01	02	03	04
Name	Side of Building	Area (ft²)	U-factor
Front Door	Exterior Front Wall	20.0	0.50

OPAQUE SURFACE CONSTRUCTIONS

01	02	03	04	05	06	07
Construction Name	Surface Type	Construction Type	Framing	Total Cavity R-value	Winter Design U-factor	Assembly Layers
Attic Roof1st fl zone	Attic Roofs	Wood Framed Ceiling	2x4 Top Chord of Roof Truss @ 24 in. O.C.	R 13	0.078	• Around Roof Joists: R-0.0 insul. • Cavity / Frame: R-13.0 / 2x4 Top Chrd • Roof Deck: Wood Siding/sheathing/decking • Roofing: Light Roof (Asphalt Shingle)
R-19 Floor Crawlspace	Floors Over Crawlspace	Wood Framed Floor	2x6 @ 16 in. O.C.	R 19 in 5-1/2 in. cavity (R-18)	0.050	• Floor Surface: Carpeted • Floor Deck: Wood Siding/sheathing/decking • Cavity / Frame: R-19 in 5-1/2 in. (R-18) / 2x6
R-21 Wall	Exterior Walls	Wood Framed Wall	2x6 @ 16 in. O.C.	R 21	0.069	• Inside Finish: Gypsum Board • Cavity / Frame: R-21 / 2x6 • Exterior Finish: 3 Coat Stucco
R-38 HP Attic Option B	Ceilings (below attic)	Wood Framed Ceiling	2x4 @ 24 in. O.C.	R 38	0.025	• Inside Finish: Gypsum Board • Cavity / Frame: R-9.1 / 2x4 • Over Ceiling Joists: R-28.9 insul.

BUILDING ENVELOPE - HERS VERIFICATION

01	02	03	04
Quality Insulation Installation (QII)	Quality Installation of Spray Foam Insulation	Building Envelope Air Leakage	CFM50
Required	Not Required	Not Required	n/a

WATER HEATING SYSTEMS

01	02	03	04	05	06
Name	System Type	Distribution Type	Water Heater	Number of Heaters	Solar Fraction (%)
DHW Sys 1	DHW	(HERS req'd) Pipe Insulation, All Lines	DHW Heater 1 (1)	1	.0%

WATER HEATERS

01	02	03	04	05	06	07	08	09	10	11	12
Name	Heater Element Type	Tank Type	Number of Units	Tank Volume (gal)	Uniform Energy Factor / Energy Factor / Efficiency	Input Rating / Pilot / Thermal Efficiency	Tank Insulation R-value (Int/Ext)	Standby Loss / Recovery Eff	First Hour Rating / Flow Rate	NEEA Heat Pump Brand / Model / Other	Tank Location or Ambient Condition
DHW Heater 1	Gas	Small Instantaneous	1	0	0.88 EF	<= 200 kBtu/hr	R-0/R-0	0	n/a	n/a	n/a

WATER HEATING - HERS VERIFICATION

01	02	03	04	05	06	07
Name	Pipe Insulation	Parallel Piping	Compact Distribution	Point-of Use	Recirculation Control	Central DHW Distribution
DHW Sys 1 - 1/1	Pipe Insulation, All Lines	n/a	n/a	n/a	n/a	n/a

SPACE CONDITIONING SYSTEMS

01	02	03	04	05	06
SC Sys Name	System Type	Heating Unit Name	Cooling Unit Name	Fan Name	Distribution Name
HVACS1	Other Heating and Cooling System	Heating Component 1	Cooling Component 1	HVAC Fan 1	Air Distribution System 1

HVAC - HEATING UNIT TYPES

01	02	03	04
Name	System Type	Number of Units	Efficiency
Heating Component 1	CntrlFurnace	1	94 AFUE

HVAC - COOLING UNIT TYPES

01	02	03	04	05	06	07	08
			Efficiency				
Name	System Type	Number of Units	EER	SEER	Zonally Controlled	Compressor Type	HERS Verification
Cooling Component 1	SplitAirCond	1	12.5	15	Not Zonal	Single Speed	Cooling Component 1-hers-cool

HVAC COOLING - HERS VERIFICATION

01	02	03	04	05	06
Name	Verified Airflow	Airflow Target	Verified EER	Verified SEER	Verified Refrigerant Charge
Cooling Component 1-hers-cool	Required	350	Required	Required	Not Required

HVAC - DISTRIBUTION SYSTEMS

01	02	03	04	05	06	07
Name	Type	Duct Leakage	Insulation R-value	Duct Location	Bypass Duct	HERS Verification
Air Distribution System 1	DuctsCrawl	Sealed and tested	8	Crawl space	None	Air Distribution System 1-hers-dist

HVAC DISTRIBUTION - HERS VERIFICATION

01	02	03	04	05	06	07	08
Name	Duct Leakage Verification	Duct Leakage Target (%)	Verified Duct Location	Verified Duct Design	Buried Ducts	Deeply Buried Ducts	Low-leakage Air Handler
Air Distribution System 1-hers-dist	Required	6.0	Not Required	Not Required	Not Required	Not Required	n/a

HVAC - FAN SYSTEMS

01	02	03	04
Name	Type	Fan Power (Watts/CFM)	HERS Verification
HVAC Fan 1	Single Speed PSC Furnace Fan	0.58	HVAC Fan 1-hers-fan

HVAC FAN SYSTEMS - HERS VERIFICATION

01	02	03
Name	Verified Fan Watt Draw	Required Fan Efficiency (Watts/CFM)
HVAC Fan 1-hers-fan	Required	0.58

IAQ (Indoor Air Quality) FANS

01	02	03	04	05	06
Dwelling Unit	IAQ CFM	IAQ Watts/CFM	IAQ Fan Type	IAQ Recovery Effectiveness(%)	HERS Verification
SFam IAQVentRpt	43	0.25	Default	0	Required

DOCUMENTATION AUTHOR'S DECLARATION STATEMENT

1. I certify that this Certificate of Compliance documentation is accurate and complete.

Documentation Author Name: Gary Faucette	Documentation Author Signature: *Gary Faucette*
Company: A.V. Energy & Associates	Signature Date: 2019-12-27 08:19:17
Address: 43915 Gingham Avenue	CEA/HERS Certification Identification (If applicable):
City/State/Zip: Lancaster, CA 93535	Phone: 661-723-6694

RESPONSIBLE PERSON'S DECLARATION STATEMENT

I certify the following under penalty of perjury, under the laws of the State of California:
1. I am eligible under Division 3 of the Business and Professions Code to accept responsibility for the building design identified on this Certificate of Compliance.
2. I certify that the energy features and performance specifications identified on this Certificate of Compliance conform to the requirements of Title 24, Part 1 and Part 6 of the California Code of Regulations.
3. The building design features or system design features identified on this Certificate of Compliance are consistent with the information provided on other applicable compliance documents, worksheets, calculations, plans and specifications submitted to the enforcement agency for approval with this building permit application.

Responsible Designer Name: Dustin Ruckman	Responsible Designer Signature:
Company: Drdesigns	Date Signed: 2019-12-27 09:30:22
Address: 536 whiting street apt 3	License: na
City/State/Zip: Grass valley, CA 95945	Phone: 530-559-2539

Digitally signed by CalCERTS. This digital signature is provided in order to secure the content of this registered document, and in no way implies Registration Provider responsibility for the accuracy of the information.

Easy to Verify at CalCERTS.com

WRITTEN DIMENSIONS SHALL HAVE PRECEDENCE OVER SCALE DIMENSIONS. contractors and home owner builders shall verify and be responsible for dimensions and conditions of the project. DR Designs must be notified of any variation from the dimensions, conditions and specifications appearing on this plan.

DR DESIGNS
(530) 559 - 2539

NEW CONSTRUCTION

632 ZION STREET
NEVADA CITY, CA

TITLE 24 CF1R

DUSTIN RUCKMAN

REVISIONS

1	
2	

APN# 005-230-010-000

19-0076 12/27/2019

T24

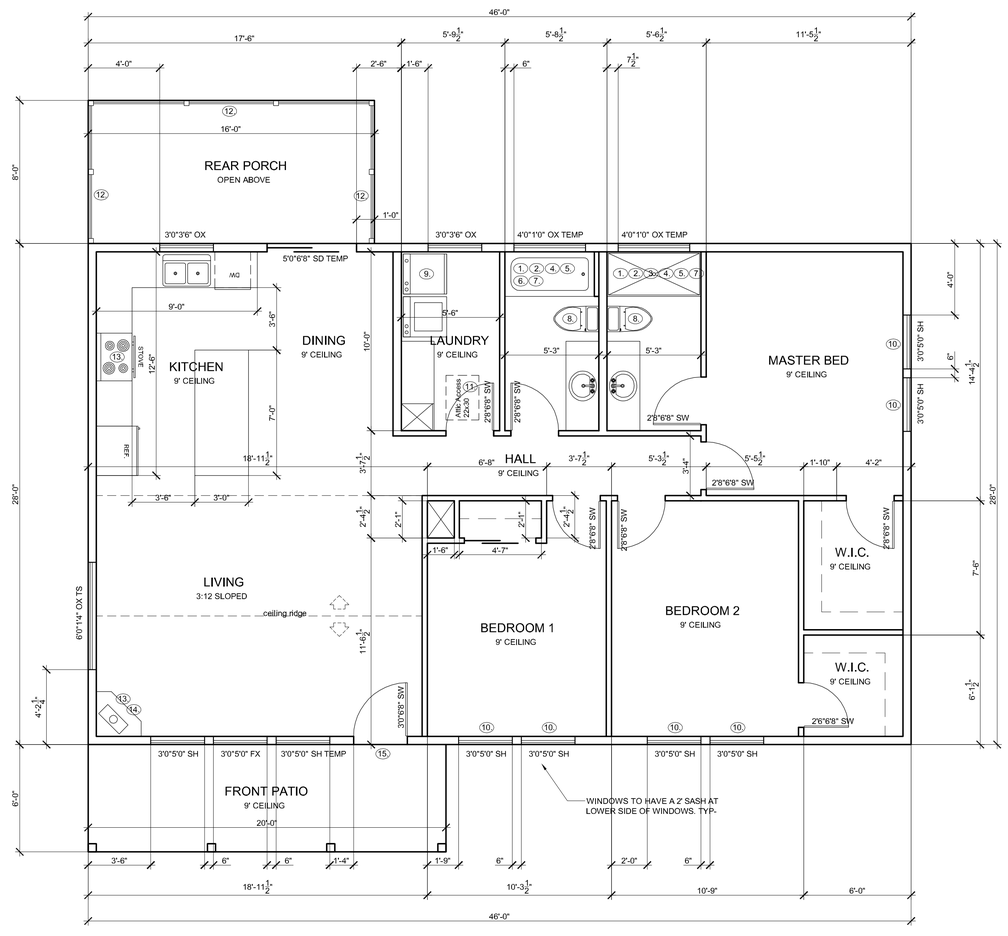

PROPOSED 1288 SF

FLOOR PLAN

SCALE 1/4" = 1'-0"

KEY NOTES

BATHROOMS

1. TEMPERED GLASS DOORS/ COVER FOR SHOWER AND BATH TUB.
2. SHOWER COMPARTMENT REGARDLESS OF SHAPE, HAVING A MINIMUM OF INTERIOR FLOOR AREA OF 1,024 SQUARE IN, AND ALSO CAPABLE OF ENCOMPASSING 30 IN CIRCLE. OPENING SHOWER ACCESS SHOULD NOT BE LESS THAN 22", PROVIDE WITH PRESSURE BALANCE OR THERMOSTATIC MIXING VALVE CONTROLS. WALL SHOULD HAVE A SMOOTH, HARD, NON ABSORBENT SURFACE (E.G... CERAMIC TILE) OVER AN APPROVED MOISTURE RESISTANT UNDERPAYMENT TO HEIGHT OF 72" ABOVE THE DRAIN INLET
3. HOT MOP OR SHEET MEMBRANE SYSTEM UNDER 11/2" MORTAR BED WITH REINFORCING, AND 1/2" THICK TILE (HARD SURFACE) IN SHOWER.
4. GLAZING IN ENCLOSURES FOR OR WALLS FACING HOT TUBS, WHIRLPOOLS, SAUNAS, SHOWERS, STEAM ROOMS AND BATH-TUBS WHERE BOTTOM EDGE OF GLAZING IS LESS THAN 60" MEASURED VERTICALLY ABOVE ANY STANDING OR WALKING SURFACE SHALL BE TEMPERED. CRC R308.4
5. SHOWERS AND TUB SHOWER COMBINATIONS THAT A PRESSURE BALANCE OR THERMOSTATIC TYPE MIXING VALVE SHALL BE PROVIDE TO DELIVER A MAXIMUM WATER TEMPERATURE OF 120 DEGREES AT THE FIXTURE.
6. NON ADSORBEN SURFACE AT TUB WALLS SHOULD CONTINUE TO A HEIGHT OF 6FT ABOVE FINISHED FLOOR.
7. SHOWER: WATER-RESISTANT GYPSUM BOARD SHALL NOT BE INSTALLED IN A SHOWER OR TUB COMPARTMENT AND SHALL NOT BE USED WHERE THERE WILL BE DIRECT EXPOSURE TO WATER, OR IN AREAS SUBJECT TO CONTINUOUS HIGH HUMIDITY PER CRC SEC. R 702.3.8 & R702.3.8.1.
8. TOILETS SHALL NOT BE INSTALL CLOSER THAN 15" FROM CENTER TO ANY FINISH WALL OR OBSTRUCTION AND ALSO WITH A MINIMUM OF 24" CLEAR FLOOR SPACE IN FRONT OF THE TOILET.

LAUNDRY

9. SMOOTH METAL DUCT FOR DRYER EXHAUST EXTENDING TO OUTSIDE WITH BACK DRAFT DAMPER THIS DUCT SHALL NOT EXCEED A TOTAL COMBINED HORIZONTAL AND VERTICAL LENGTH OF 14' INCLUDING TWO 90° ELBOWS. TWO FEET SHALL BE DEDUCTED FOR EACH 90° ELBOW IN EXCESS OF TWO

BEDROOMS

10. EGRESS WINDOWS WITH MIN OF 5.7 SF OPENING, MIN. OF 24" HEIGHT CLEAR, AND 20" WIDE CLEAR IS REQUIRED. MAX. OF 44" FROM FINISH FLOOR TO THE OPENING BOTTOM OF WINDOWS

ATTIC SPACE

11. A MINIMUM OF 22"X30" READILY ACCESSIBLE ATTIC ACCESS WITH A MINIMUM OF 30" HEADROOM ABOVE FOR EACH SEPARATE ATTIC AREA. NO SHELVING BELOW ATTIC ACCESS. ATTIC MUST BE READILY ACCESSIBLE

STAIRS, DECKS, AND PORCHES

12. GUARD RAIL WITH 42" HEIGHT WITH BALUSTERS @ 4" OC MAX. DESIGNED TO CARRY 200# POINT LOAD @ ANY POINT ALONG THE TOP GUARD (SEE PAGE FOR DETAILS).

MISCELLANEOUS

13. GAS VENTS SHALL TERMINATE NOT LESS THAN 2' ABOVE THE HIGHEST POINT WHERE THEY PASS THROUGH THE ROOF AND AT LEAST 2 FEET HIGHER THAN ANY PORTION OF A BUILDING WITHIN 10'. GAS VENTS SMALLER THAN 12" IN DIAMETER MAY TERMINATE AT LEAST 1' ABOVE THE ROOFS UP TO A 6:12 PITCH AND AT LEAST 8' FROM ANY PORTION OF THE BUILDING. FOR HIGHER ROOF PITCHES REFER TO FIGURE 8-2. CMC 802.6.2
14. VENTS FOR FUEL BURNING APPLIANCES OTHER THAN DIRECT-VENT APPLIANCES SHALL TERMINATE AT LEAST 4' BELOW, 4' HORIZONTALLY FROM, OR 1' ABOVE ANY DOOR, OPERABLE WINDOW, OR GRAVITY AIR INLET INTO THE BUILDING. THE BOTTOM OF THE VENT SHALL BE LOCATED AT LEAST 12" ABOVE THE GRADE. CMC 802.8.2
15. MINIMUM 36" DEEP LANDING OUTSIDE THE MAIN EXTERIOR EGRESS DOOR. THE LANDING SHALL NOT BE MORE THAN 7.75" LOWER THAN THE THRESHOLD FOR THE MAIN ENTRANCE IN-SWING DOOR, (1-1/2" FOR OUT SWINGING). LANDINGS SHALL HAVE MAX. 2% SLOPE AWAY FROM FOUNDATION - TYP.
16. COMBUSTION AIR FROM EXTERIOR FOR GAS WITH GAS EXHAUST TO THE EXTERIOR. PROVIDE PRV DRAIN PIPE. TANK TO BE SEATED ON A 18" HIGH FLAT FORM IF NOT WALL MOUNTED. SEE TITLE 24 FOR SIZE SPECIFICATION, AND TYPE.

NOTE: HVAC & TANKLESS HW LOCATED IN CRAWLSPACE UNDER HOUSE.

KEY NOTES CONT.

WALL LEGEND

- ADDITIONAL DWELLING OR NON DWELLING AREA
- EXISTING WALL REMAINING UNCHANGED
- PROPOSED NEW WALL TO BE CONSTRUCTED
- EXISTING WALL, APPLIANCE, OR OTHER PERIPHERAL TO BE REMOVED / DEMO'D

WINDOW ABBREVIATIONS

REF	NOTES
OX	HORIZONTAL SLIDER
SH	SINGLE HUNG
FX	FIXED
TS	ABOVE TRANSOM
CS	CASEMENT
GR	GARDEN POPOUT / BAY
AW	AWNING

DOOR ABBREVIATIONS

REF	NOTES
SW	STANDARD SWING
DBL	DOUBLE DOOR
SL	SLIDER
FR	FRENCH
DBLFR	DOUBLE FRENCH
PD	POCKET
BN	BARN SLIDER
RL	ROLL UP

ROOM ABBREVIATIONS

REF	NOTES
N	NEW BUILT
R	REMODELED
C	CONVERTED
DE	TO BE DEMOLISHED
LE	TO BE LEGALIZED

GENERAL COMMENTS

- ALL EXTERIOR WALLS TO BE 2X6 UNLESS OTHERWISE NOTED ON FLOOR PLAN.
- ALL INTERIOR WALLS TO BE 2X4 UNLESS OTHERWISE NOTED ON FLOOR PLAN.
- REFER TO WILDLAND-URBAN INTERFACE FIRE ZONE REQUIREMENTS R327 ON PAGE A1.1.
- NON-REMOVABLE BACKFLOW PREVENTION DEVICES AT ALL EXTERIOR HOSE BIBS PER CPC SECTION 603.5.7
- LAUNDRY DRYER VENTING TO BE ROUTED TO EITHER ACCESSIBLE BASEMENT AREA OR EXTERIOR WALL.
- KITCHEN ISLAND SINK IS TO BE VENTED PER CPC SECTION 909.1.

WRITTEN DIMENSIONS SHALL HAVE PRECEDENCE OVER SCALE DIMENSIONS. contractors and home owner builders shall verify and be responsible for dimensions and conditions of the project. DR Designs must be notified of any variation from the dimensions, conditions and specifications appearing on this plan.

DR DESIGNS
(530) 559 - 2539

NEW CONSTRUCTION

632 ZION STREET
NEVADA CITY, CA

FLOOR PLAN

DUSTIN RUCKMAN

REVISIONS

1	
2	

APN# 005-230-010-000

19-0076	12/27/2019

A3

STAPLE HERE
To Agenda

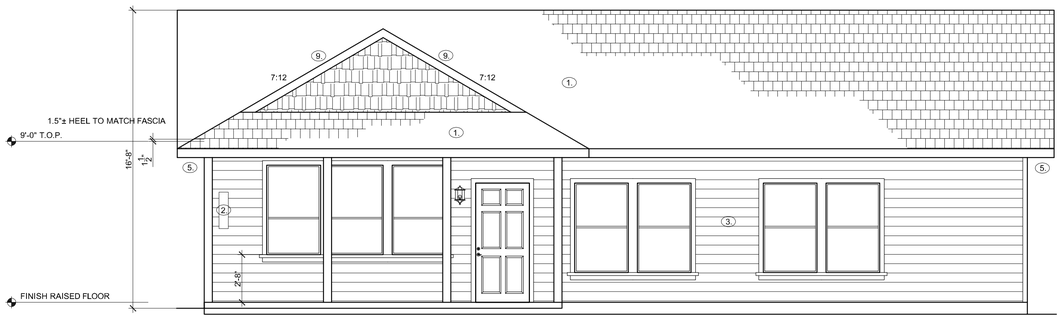

FRONT ELEVATION

SCALE 1/4" = 1'-0"

RIGHT ELEVATION

SCALE 1/4" = 1'-0"

ATTIC ROOF VENTILATION CALCULATIONS

AREA VENTILATED		VENTILATED RATE		REQUIRED AREA	
1657		300	TH	795	SQ. IN.
TYPE	**SIZE**	**QUANTITY**	**AREA / UNIT**	**DESIGNED AREA**	
GLPG1420 - ROOF	16"X20"	2	192 SQ. IN.	384	SQ. IN.
STDH24 - ROOF	12"X12"	-	86 SQ. IN.	-	SQ. IN.
S MODEL - ROOF	26"X20"	-	98 SQ. IN.	-	SQ. IN.
FLAT MODEL - ROOF	29"X19"	-	99 SQ. IN.	-	SQ. IN.
EAVE VENT - BLOCK	24"X3.5"	8	55 SQ. IN.	440	SQ. IN.
			TOTAL	824	SQ. IN.

NOTES:

- VENT CALCULATION IS BASED FROM THE CONSTRUCTION METAL INC. PRODUCT @ GABLE ENDS. OR O'HANGIN'S INC. ON ROOF FINISHING. THE REPLACEMENT VENTS SHALL HAVE THE SAME VALUE OR BETTER.

CALCS:

- REQUIRED AREA SQ. IN. = VENTILATED AREA / 300 X 144

FOUNDATION VENTILATION CALCULATIONS

AREA VENTILATED		VENTILATED RATE		REQUIRED AREA	
1288		150	TH	1236	SQ. IN.
TYPE	**SIZE**	**QUANTITY**	**AREA / UNIT**	**DESIGNED AREA**	
ACCESS DOOR	22"X24"	-	320 SQ. IN.	-	SQ. IN.
FLOOR VENT	8"X14"	14	94 SQ. IN.	1316	SQ. IN.
FLOOR VENT	6"X14"	-	67 SQ. IN.	-	SQ. IN.
-	-	-	- SQ. IN.	-	SQ. IN.
			TOTAL	1316	SQ. IN.

NOTES:

- REQUIRED VENTILATION AREAS BASED ON SECTION CRC R408
- ALL VENTILATIONS SHOWN IN CALCULATIONS ARE MANUFACTURE BY "NOLL". NET FREE AREAS USED HAVE BEEN TAKEN FROM VENT MANUFACTURE CATALOGS. BUILDER MAY SUBSTITUTE DIFFERENT MANUFACTURER PRODUCTS THAN SHOWN PROVIDED THAT THE PRODUCTS MEET OR EXCEED NET FREE AREAS PER UNIT SHOWN IN THESE CALCULATIONS
- ONE VENT IS REQUIRED WITHIN 3 FEET OF EACH BUILDING CORNER.

CALCS:

- REQUIRED AREA SQ. IN. = VENTILATED AREA / 150 X 144

NOTES

LEGEND

1. CLASS A 40 YEAR LAMINATED DIMENSIONAL COMPOSITION ROOF FINISH OVER 15# FELT LAYER TYP.
2. ADDRESS NUMBER PLATE ON THE BUILDING ELEVATION WHICH SHALL BE CLEARLY VISIBLE FROM THE ADJACENT ACCESS STREET OR ROAD. THE NUMBERS SHALL BE NO LESS THE 4" IN HEIGHT AND 1/2" IN WIDTH AND SHALL BE OF A CONTRASTING COLOR AND ILLUMINATED AT NIGHT
3. EXTERIOR SHEETING - HORIZONTAL HARDI PLANK SIDING OVER MOISTURE BARRIER LAYER
4. EXTERIOR SHEETING - VERTICAL 8" LP SMARTSIDE OVER MOISTURE BARRIER LAYER
5. FIRE RATED EAVE SEE DETAIL 1/AD1
6. TEMPERED GLASS DOORS
7. TEMPERED GLASS WINDOW
8. GUARD RAIL/HAND RAIL (SEE FLOOR PLAN FOR SPECIFICATIONS AND REQUIREMENTS)
9. METAL DRIP EDGE IS REQUIRED FOR ALL COMPOSITION ROOF INSTALLATION
10. 5" SEAMLESS GUTTERS WITH LEAF GUARD GUTTER TOPPERS.

WRITTEN DIMENSIONS SHALL HAVE PRECEDENCE OVER SCALE DIMENSIONS. contractors and home owner builders shall verify and be responsible for dimensions and conditions of the project. DR Designs must be notified of any variation from the dimensions, conditions and specifications appearing on this plan.

DR DESIGNS
(530) 559 - 2539

NEW CONSTRUCTION

632 ZION STREET
NEVADA CITY, CA

ELEVATIONS

DUSTIN RUCKMAN

REVISIONS

1

2

APN# 005-230-010-000

19-0076 | 12/27/2019

A4.1

STAPLE HERE
To Agenda

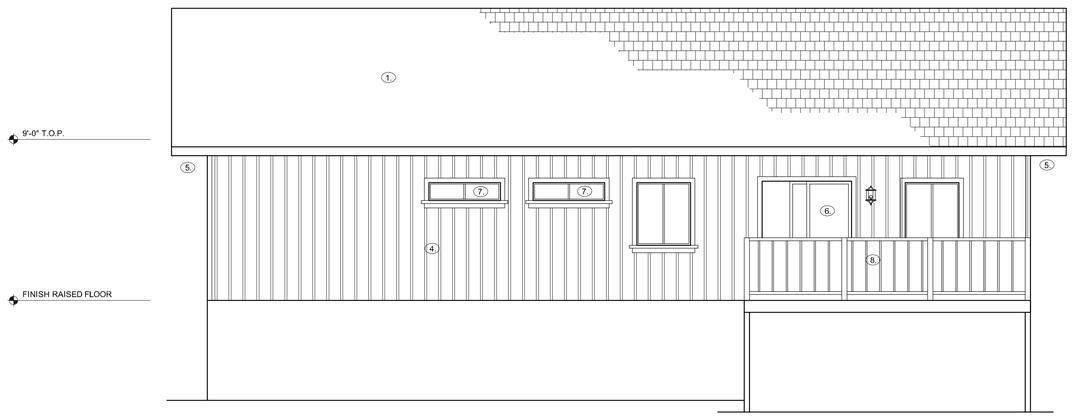

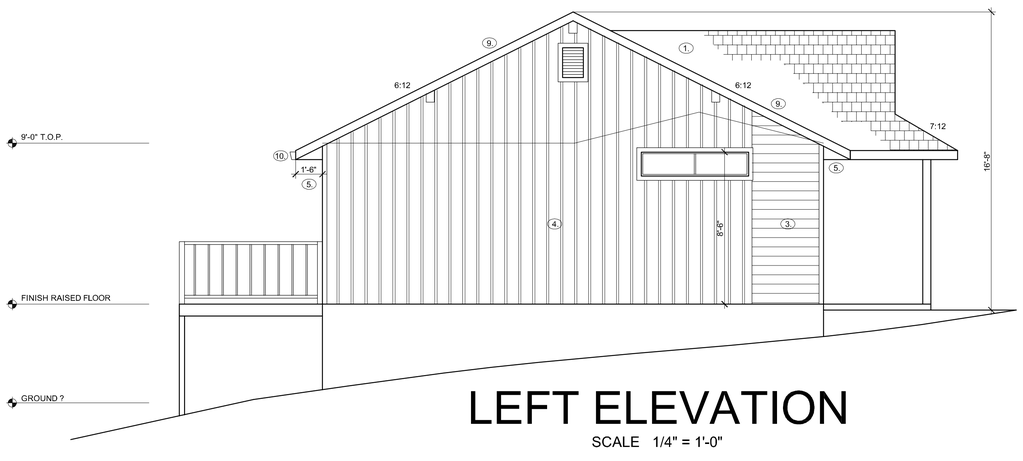

LEFT ELEVATION

SCALE 1/4" = 1'-0"

ATTIC ROOF VENTILATION CALCULATIONS

AREA VENTILATED		VENTILATED RATE	REQUIRED AREA
1657		300 TH	795 SQ. IN.
TYPE	**SIZE**	**QUANTITY**	**AREA / UNIT** / **DESIGNED AREA**
GLPG1420 - ROOF	16"X20"	2	192 SQ. IN. / 384 SQ. IN.
STDH24 - ROOF	12"X12"	-	86 SQ. IN. / - SQ. IN.
S MODEL - ROOF	26"X20"	-	98 SQ. IN. / - SQ. IN.
FLAT MODEL - ROOF	29"X19"	-	99 SQ. IN. / - SQ. IN.
EAVE VENT - BLOCK	24"X3.5"	8	55 SQ. IN. / 440 SQ. IN.
			TOTAL / 824 SQ. IN.

NOTES:
- VENT CALCULATION IS BASED FROM THE CONSTRUCTION METAL INC. PRODUCT @ GABLE ENDS. OR O'HANGIN'S INC. ON ROOF FINISHING. THE REPLACEMENT VENTS SHALL HAVE THE SAME VALUE OR BETTER.

CALCS:
- REQUIRED AREA SQ. IN. = VENTILATED AREA / 300 X 144

FOUNDATION VENTILATION CALCULATIONS

AREA VENTILATED		VENTILATED RATE	REQUIRED AREA
1288		150 TH	1236 SQ. IN.
TYPE	**SIZE**	**QUANTITY**	**AREA / UNIT** / **DESIGNED AREA**
ACCESS DOOR	22"X24"	-	320 SQ. IN. / - SQ. IN.
FLOOR VENT	8"X14"	14	94 SQ. IN. / 1316 SQ. IN.
FLOOR VENT	6"X14"	-	67 SQ. IN. / - SQ. IN.
-	-	-	- SQ. IN. / - SQ. IN.
			TOTAL / 1316 SQ. IN.

NOTES:
- REQUIRED VENTILATION AREAS BASED ON SECTION CRC R408
- ALL VENTILATIONS SHOWN IN CALCULATIONS ARE MANUFACTURE BY "NOLL". NET FREE AREAS USED HAVE BEEN TAKEN FROM VENT MANUFACTURE CATALOGS. BUILDER MAY SUBSTITUTE DIFFERENT MANUFACTURER PRODUCTS THAN SHOWN PROVIDED THAT THE PRODUCTS MEET OR EXCEED NET FREE AREAS PER UNIT SHOWN IN THESE CALCULATIONS
- ONE VENT IS REQUIRED WITHIN 3 FEET OF EACH BUILDING CORNER.

CALCS:
- REQUIRED AREA SQ. IN. = VENTILATED AREA / 150 X 144

NOTES

LEGEND

1. CLASS A 40 YEAR LAMINATED DIMENSIONAL COMPOSITION ROOF FINISH OVER 15# FELT LAYER TYP.
2. ADDRESS NUMBER PLATE ON THE BUILDING ELEVATION WHICH SHALL BE CLEARLY VISIBLE FROM THE ADJACENT ACCESS STREET OR ROAD. THE NUMBERS SHALL BE NO LESS THE 4" IN HEIGHT AND 1/2" IN WIDTH AND SHALL BE OF A CONTRASTING COLOR AND ILLUMINATED AT NIGHT
3. EXTERIOR SHEETING - HORIZONTAL HARDI PLANK SIDING OVER MOISTURE BARRIER LAYER
4. EXTERIOR SHEETING - VERTICAL 8" LP SMARTSIDE OVER MOISTURE BARRIER LAYER
5. FIRE RATED EAVE SEE DETAIL 1/AD1
6. TEMPERED GLASS DOORS
7. TEMPERED GLASS WINDOW
8. GUARD RAIL/HAND RAIL (SEE FLOOR PLAN FOR SPECIFICATIONS AND REQUIREMENTS)
9. METAL DRIP EDGE IS REQUIRED FOR ALL COMPOSITION ROOF INSTALLATION
10. 5" SEAMLESS GUTTERS WITH LEAF GUARD GUTTER TOPPERS.

WRITTEN DIMENSIONS SHALL HAVE PRECEDENCE OVER SCALE DIMENSIONS. contractors and home owner builders shall verify and be responsible for dimensions and conditions of the project. DR Designs must be notified of any variation from the dimensions, conditions and specifications appearing on this plan.

DR DESIGNS
(530) 559 - 2539

NEW CONSTRUCTION

632 ZION STREET
NEVADA CITY, CA

ELEVATIONS

DUSTIN RUCKMAN

REVISIONS
1
2

APN# 005-230-010-000

19-0076 | 12/27/2019

A4.2

STAPLE HERE
To Agenda

STAPLE HERE STAPLE HERE STAPLE HERE STAPLE HERE STAPLE HERE STAPLE HERE STAPLE HERE

SEE FRAMING PLAN FOR DETAILS

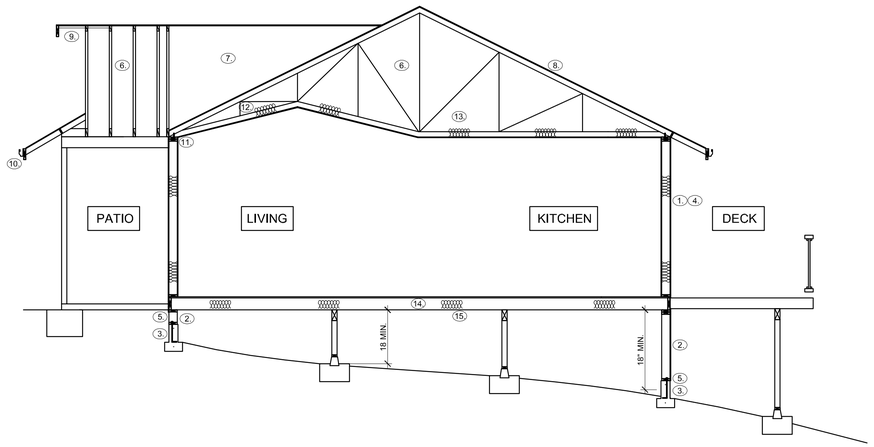

SEE FOUNDATION PLAN FOR FOOTING DETAIL

SECTION A

SCALE 1/4" = 1'-0"

KEY NOTES

1. R21 WALL INSULATION WITH 2X6 STUDS @ 16" @ CENTER (TYPICAL EXTERIOR WALLS)
2. CRIPPLE WALL WITH 2X STUDS @ 16" O.C.
3. A.B. AND STEEL REBARS PER PLAN.
4. EXTERIOR SHEETING PER PLAN
5. METAL FLASHING PER PLAN ALL AROUND BUILDING TYP.
6. PREMAMUFACTURED ROOF TRUSSES.
7. CAL-FILL SYTEM WITH MIN. OF 2X6 RAFTERS, AND 2X6 RIDGE WITH THE VERTICAL SUPPORTING @ 4'-0" O.C.
8. ROOF SHEETING PER PLAN
9. OUT RIGGER PER TRUSS CALCULATIONS
10. 2X FASCIAL BOARD W/METAL GUTTER TYP.
11. H1 SIMPSON CLIP TYP.
12. INSULATION IN ATTIC NEEDS TO HAVE A MINIMUN OF 1" OF AIR SPACE BETWEEN THE INSULATION AND ROOF SHEATHING
13. R38 CEILING INSULATION TYPICAL
14. 2X6 DF#2 @ 16" O.C. FLOOR JOIST PER PLAN
15. R19 MIN. FLOOR

SEE FRAMING PLAN FOR DETAILS

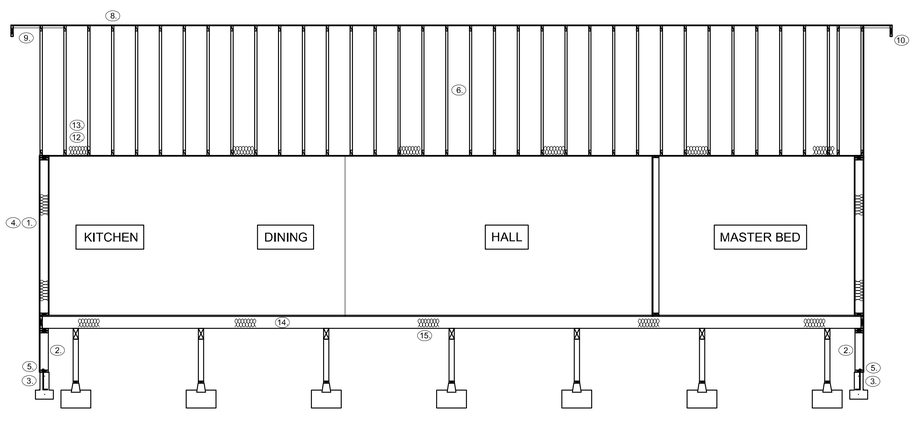

SEE FOUNDATION PLAN FOR FOOTING DETAIL

SECTION B

SCALE 1/4" = 1'-0"

To Agenda

WRITTEN DIMENSIONS SHALL HAVE PRECEDENCE OVER SCALE DIMENSIONS. contractors and home owner builders shall verify and be responsible for dimensions and conditions of the project. DR Designs must be notified of any variation from the dimensions, conditions and specifications appearing on this plan.

DR DESIGNS
(530) 559 - 2539

NEW CONSTRUCTION
632 ZION STREET
NEVADA CITY, CA

SECTION PLAN

DUSTIN RUCKMAN

REVISIONS

1		
2		

APN# 005-230-010-000

19-0076 12/27/2019

A5

STAPLE HERE STAPLE HERE STAPLE HERE STAPLE HERE STAPLE HERE STAPLE HERE STAPLE HERE

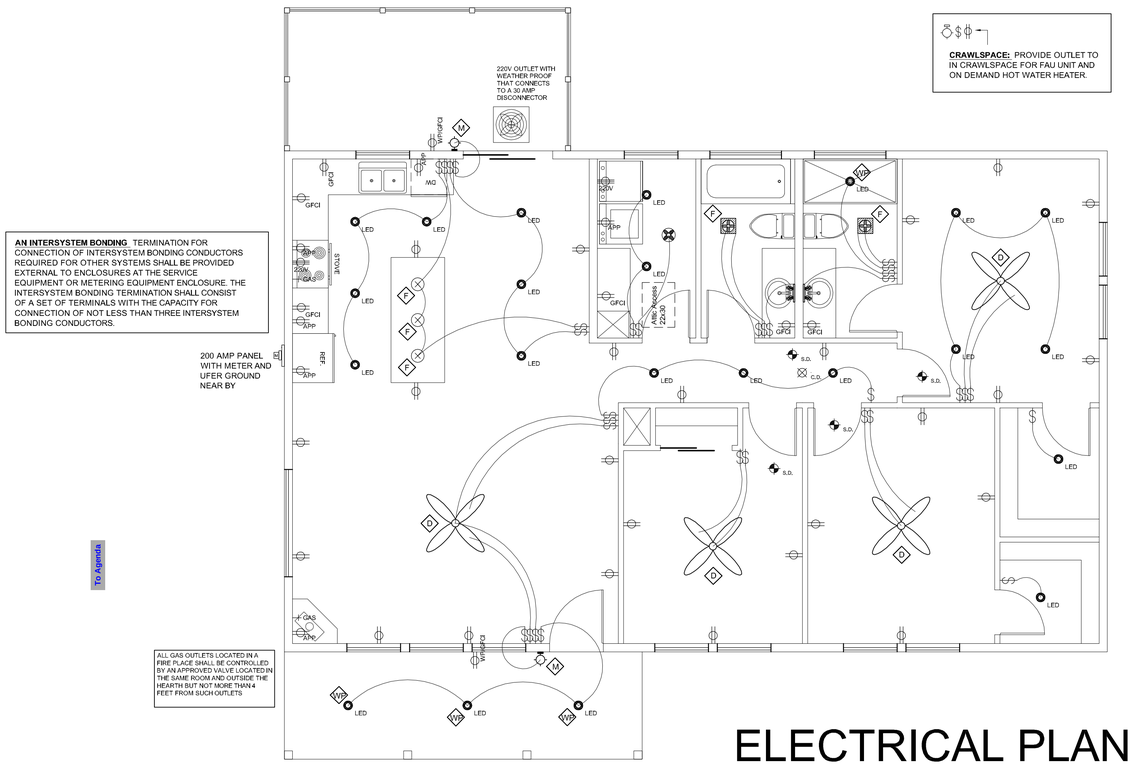

ELECTRICAL PLAN

SCALE 1/4" = 1'-0"

GROUNDING ELECTRODE (UFER)

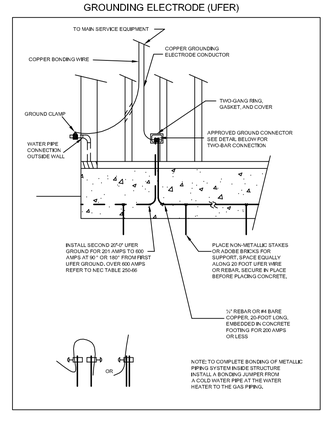

TYPE LEGEND

- F — THIS FIXTURE IS THE HIGH EFFICACY TYPE (FLOURESCENT WITH GU-24 SOCKET) OR L.E.D.
- M — MOTION CONTROL DETECTION, WITH STRONOMICAL TIME CLOCK, OR PHOTO CELL CONTROL W/ L.E.D.
- MS — MOTION CONTROL DETECTION SWITCH W/ L.E.D.
- D — DIMMER SWITCH TO CONTROL L.E.D. FIXTURE
- WP — SUITABLE FOR WET LOCATIONS W/ L.E.D.

ELECTRICAL SYMBOLS

- 110V 20A TAMPER-RESISTANT RECEPTACLE
- GFCI — 110V OUTLET ON G.F.I. CIRCUIT
- WP/GFCI — 110V G.F.I. OUTLET WITH WEATHER PROOF CASE OR PLUG CAP.
- 220V — 220V OUTLET
- GFCI — 110V OUTLET CEILING MOUNTED (FOR GARAGEDOOR OPENER GENERALLY)
- APP — 110V 20A APPLIANCE OUTLET W/ TAMPER RESISTANCE
- SWITCH
- GAS — GAS OUTLET
- DIS — GARBAGE DISPOSAL DEVICE SWITCH
- WALL MOUNTED FIXTURE
- CEILING HUNG CHANDELIER FIXTURE
- CEILING MOUNTED FIXTURE
- LED — RECESSED HIGH EFFICENCY L.E.D. LIGHT FIXTURE
- CEILING MOUNTED HIGH EFFICENCY FLUORESCENT FIXTURE
- CEILING FAN W/BUILT IN LIGHTING
- EXHAUST FAN
- EXHAUST FAN WITH COMPACTED HIGH EFFICENCY FLUORESCENT FIXTURE
- S.D. — SMOKE DETECTOR. PROVIDE HARD WIRED, INTERCONNECTED WITH BACK UP BATTERY.
- C.D. — CARBON MONOXIDE DETECTOR. PROVIDE HARD WIRED, INTERCONNECTED WITH BACK UP BATTERY.
- WALL MOUNTED VANITY LIGHT
- PENDANT DROP LIGHT FROM CEILING
- EV — ELECTRICAL OUTLET FOR ELECTRIC CAR CHARGER

NOTES

2016 CALIFORNIA ENERGY CODE:

-ALL LUMINAIRES MUST BE HIGH EFFICACY (CALIFORNIA ENERGY CODE 150.0(K)1A)

-LUMINARIES RECESSED IN INSULATED CEILINGS JUST MEET FIVE REQUIREMENTS (CALIFORNIA ENERGY CODE 150.0(K)1C):

- THEY MUST BE RATED FOR DIRECT INSULATION CONTACT (IC).
- THEY MUST BE CERTIFIED AS AIRTIGHT (AT) CONSTRUCTION.
- THEY MUST HAVE A SEALED GASKET OR CAULKING BETWEEN THE HOUSING AND CEILING TO PREVENT FLOW OF HEATED OR COOLED AIR OUT OF LIVING AREAS AND INTO THE CEILING CAVITY.
- THEY MAY NOT CONTAIN A SCREW BASE SOCKETS
- THEY SHALL CONTAIN A JA8 COMPLIANT LIGHT SOURCE.

-IN BATHROOMS, GARAGES, LAUNDRY ROOMS, AND UTILITY ROOMS, AT LEAST ON LUMINAIRE IN EACH OF THESE SPACES SHALL BE CONTROLLED BY A VACANCY SENSOR, (CALIFORNIA ENERGY CODE 150.0(K)2J)

-JOINT APPENDIX A (JA8) CERTIFIED LAMPS SHALL BE CONSIDERED HIGH EFFICACY. JA8 COMPLIANT LIGHT SOURCES SHALL BE CONTROLLED BY A VACANCY SENSOR OR DIMMER. (EXCEPTION: <70SF CLOSETS AND HALLWAY) (CALIFORNIA ENERGY CODE 150.0(K)2K)

-ALL EXTERIOR LIGHTING SHALL BE HIGH EFFICACY, BE CONTROLLED BY A MANUAL ON/OFF SWITCH AND HAVE ONE OF THE FOLLOWING CONTROLS (THE MANUAL SWITCH SHALL NOT OVERRIDE THE AUTOMATIC CONTROL DEVICE): (CALIFORNIA ENERGY CODE 150.0(K)3A)

- PHOTO-CONTROL AND MOTION SENSOR
- PHOTO-CONTROL AND AUTOMATIC TIME SWITCH CONTROL
- ASTRONOMICAL TIME CLOCK CONTROL TURNING LIGHTS OFF DURING THE DAY

-ALL HIGH EFFICACY LIGHT FIXTURES SHALL BE CERTIFIED AS "HIGH-EFFICACY" LIGHT FIXTURES BY THE CALIFORNIA ENERGY COMMISSION.

-CONTRACTOR SHALL PROVIDE THE HOMEOWNER WITH A LUMINAIRE SCHEDULE GIVING THE LAMPS USED IN THE LUMINAIRES INSTALLED. (CALIFORNIA ENERGY CODE 10-103(B))

-THE NUMBER OF BLANK ELECTRICAL BOXES MORE THAN 5 FEET ABOVE THE FINISHED FLOOR SHALL NOT BE GREATER THAN THE NUMBER OF BEDROOMS. THESE ELECTRICAL BOXES MUST BE SERVED BY A DIMMER, VACANCY SENSOR, OR FAN SPEED CONTROL. (CALIFORNIA ENERGY CODE 150(K)8)

NOTES CONT.

GFCI PROTECTION NOTES:

GFCI PROTECTION IS REQUIRED FOR ALL 15A, OR 20A, 125VRECEPTACLES INSTALLED IN THE FOLLOWING LOCATIONS

- SINKS- GFCI PROTECTION FOR RECEPTACLES IS REQUIRED WITHIN ARC MEASUREMENT OF 6FT. OF THE OUTSIDE EDGE OF A SINK.
- BATH TUBS OR SHOWER STALLS - GFCI PROTECTION IS REQUIRED FOR RECEPTACLES LOCATED WITHIN 6FT OF THE OUTSIDE EDGE OF A BATHTUB OR SHOWER STALL.
- LAUNDRY AREAS - RECEPTACLES INSTALLED IN LAUNDRY AREAS OF A DWELLING UNIT SHALL BE GFCI PROTECTED.
- DWELLING UNIT DISHWASHERS - OUTLETS SUPPLYING DISHWASHERS IN A DWELLING UNIT MUST BE GFCI PROTECTED PER 2016 CEC ART. CEC210.

ARC-FAULT CIRCUIT-INTERRUPTER PROTECTION

ALL 15A, OR 20A, 120V BRANCH CIRCUITS IN DWELLING UNITS SUPPLYING OUTLETS OR DEVICES IN KITCHENS, FAMILY ROOMS, DINING ROOMS, LIVING ROOMS, PARLORS, LIBRARIES, DENS, BEDROOMS, SUNROOMS, RECREATION ROOMS, CLOSETS, HALLWAYS, LAUNDRY AREAS, OR SIMILAR ROOMS OR AREAS SHALL BE ARC-FAULT CIRCUIT- INTERRUPTER PROTECTED IN ACCORDANCE WITH 2016 CEC ART.2010.012(A)

RECEPTACLE REQUIREMENTS:

- GFCI SHALL BE IN THE LAUNDRY AREA AND WITHIN 6 FEET OF SINK FOR REFRIGERATOR AND GARBAGE DISPOSAL. CEC 210.8A 910.
- GFCI PROTECTION IS REQUIRED ON ALL DISHWASHERS IN DWELLING UNITS. CEC 210.8(D).
- AFCI PROTECTION IS REQUIRED IN KITCHEN AND LAUNDRY AREAS. CEC 210.12 A.
- OUTDOOR RECEPTACLES SHALL BE READILY ACCESSIBLE FROM GRADE LEVEL. CEC 210.52 E1.
- IN EACH ATTACHED GARAGE AND IN EACH DETACHED GARAGE WITH ELECTRIC POWER, AT LEAST ONE RECEPTACLE OUTLET SHALL BE INSTALLED IN EACH VEHICLE BAY AND NOT MORE THAN 1.7 M (5 ½ FT) ABOVE THE FLOOR. 210.52(G)(1)
- ALL OUTDOOR RECEPTACLES TO HAVE EXTRA DUTY RATED IN USE COVERS. CEC 406.9 (1)
- AN EQUIPMENT GROUND CONDUCTOR IS REQUIRED IN ALL OUTDOOR HVAC EQUIPMENT IN LFMC AND EMT. CEC 440.9

GARAGE RECEPTACLE NOTES:

IN EACH SFD ATTACHED GARAGE AND EACH DETACHED GARAGE WITH ELECTRICAL POWER AT LEAST ONE RECEPTACLE SHALL BE FOR EACH CAR SPACE IN ADDITION TO RECEPTACLES REQUIRED FOR SPECIFIC EQUIPMENT. THEN BRANCH CIRCUIT SUPPLYING THE RECEPTACLE(S) SHALL NOT SUPPLY OUTLETS OUTSIDE OF THE GARAGE.

TAMPER-RESISTANT RECEPTACLES

TAMPER-RESISTANT RECEPTACLES IN THE DWELLING. ALL 125-VOLT, SINGLE PHASE, 15 AND 20-AMP RECEPTACLES SHALL BE LISTED TAMPER-RESISTANT RECEPTACLES. (THROUGHOUT) 2016 CEC ART. 406.12.

ELECTRIC VEHICLE CHARGING FOR NEW CONSTRUCTION:

- NEW ONE OR TWO-FAMILY DWELLINGS AND TOWNHOUSES WITH ATTACHED PRIVATE GARAGES SHALL INSTALL A LISTED RACEWAY TO ACCOMMODATE A DEDICATED 220-VOLT BRANCH CIRCUIT FOR AN EV CHARGER. THE RACEWAY SHALL NOT BE LESS THAN NOMINAL 1" INSIDE Ø. THE RACEWAY SHALL ORIGINATE AT THE MAIN SERVICE OR SUBPANEL AND SHALL TERMINATE INTO A LISTED ENCLOSURE IN CLOSE PROXIMITY TO THE PROPOSED LOCATION OF AN EV CHARGER. THE SERVICE PANEL AND/OR SUBPANEL SHALL PROVIDE CAPACITY TO INSTALL A 40 AMP MINIMUM DEDICATED BRANCH CIRCUIT AND SPACE(S) RESERVED TO PERMIT INSTALLATION OF A BRANCH CIRCUIT OVERCURRENT PROTECTIVE DEVICE.
- THE SERVICE PANEL OR SUBPANEL CIRCUIT DIRECTORY SHALL IDENTIFY THE OVERCURRENT PROTECTIVE DEVICE SPACES(S) RESERVED FOR FUTURE EV CHARGING AS "EV CAPABLE". THE RACEWAY TERMINATION LOCATION SHALL BE PERMANENTLY AND VISIBLY MARKED AS "EV CAPABLE".

ATTIC FURNACE NOTE:

THE DISTANCE FROM THE PASSAGEWAY ACCESS TO THE FURNACE SHALL NOT EXCEED 20 FEET MEASURED ALONG THE CENTER LINE OF THE PASSAGEWAY. THE PASSAGEWAY SHALL BE UNOBSTRUCTED AND SHALL HAVE CONTINUOUS SOLID FLOORING NOT LESS THAN 24 INCHES WIDE FROM THE ENTRANCE OPENING TO THE FURNACE. A LEVEL WORKING PLATFORM NOT LESS THAN 30 INCHES IN DEPTH AND WIDTH SHALL BE PROVIDED IN FRONT OF THE ENTIRE FIRE BOX SIDE OF THE WARM AIR FURNACE. IF THE FURNACE TEMPERATURE LIMIT CONTROL, AIR FILTER, FUEL CONTROL VALVE, VENT COLLAR, OR AIR HANDLING UNIT IS NOT SERVICEABLE FROM THE FIRE BOX SIDE OF THE FURNACE, A CONTINUOUS FLOOR NOT LESS THAN 24 INCHES IN WIDTH SHALL BE PROVIDED FROM THE PLATFORM IN FRONT OF THE FIRE BOX SIDE OF THE FURNACE TO AND IN FRONT OF THIS EQUIPMENT. A PERMANENT ELECTRIC OUTLET AND LIGHTING FIXTURE CONTROLLED BY A SWITCH LOCATED AT THE REQUIRED PASSAGEWAY OPENING SHALL BE PROVIDED AT OR NEAR THE FURNACE. 2016 CMC

PROVIDE FOR DEDICATED CIRCUITS FOR EACH FURNACE PER THE CEC SECTION 422.12.

NOTES CONT.

LAUNDRY ROOM NOTES:

- ALL EXHAUST DUCTING FROM DRYER SHALL BE EQUIPPED WITH A LISTED BACK DRAFT DAMPER AT OUTSIDE TERMINATION PER CMC SECTION 504.1.
- MINIMUM 4" DIAMETER DRYER EXHAUST DUCT SHALL BE INSTALLED PER CMC SECTION 504.3.1.
- EXHAUST FAN REQUIREMENTS. MINIMUM RATE IS 50 CFM INTERMITTENT OR 20 CFM CONTINUOUS PER CMC TABLE 403.7.

SMOKE DETECTOR NOTES:

- SMOKE ALARMS AND SMOKE DETECTORS SHALL NOT BE LOCATED WHERE AMBIENT CONDITIONS, INCLUDING HUMIDITY AND TEMPERATURE, ARE OUTSIDE THE LIMITS SPECIFIED BY THE MANUFACTURER'S PUBLISHED INSTRUCTIONS.
- SMOKE ALARMS AND SMOKE DETECTORS SHALL NOT BE LOCATED WITHIN UNFINISHED ATTICS OR GARAGES OR IN OTHER SPACES WHERE TEMPERATURES CAN FALL BELOW 40°F (4°C) OR EXCEED 100°F (38°C).
- WHERE THE MOUNTING SURFACE COULD BECOME CONSIDERABLY WARMER OR COOLER THAN THE ROOM, SUCH AS A POORLY INSULATED CEILING BELOW AN UNFINISHED ATTIC OR AN EXTERIOR WALL, SMOKE ALARMS AND SMOKE DETECTORS SHALL BE MOUNTED ON AN INSIDE WALL.
- SMOKE ALARMS OR SMOKE DETECTORS SHALL BE INSTALLED A MINIMUM OF 20 FEET HORIZONTAL DISTANCE FROM A PERMANENTLY INSTALLED COOKING APPLIANCE. EXCEPTION: IONIZATION SMOKE ALARMS WITH AN ALARM SILENCING SWITCH OR PHOTOELECTRIC SMOKE ALARMS SHALL BE PERMITTED TO BE INSTALLED 10 FEET (3 M) OR GREATER FROM A PERMANENTLY INSTALLED COOKING APPLIANCE. PHOTOELECTRIC SMOKE ALARMS SHALL BE PERMITTED TO BE INSTALLED GREATER THAN 6 FEET (1.8 M) FROM A PERMANENTLY INSTALLED COOKING APPLIANCE WHERE THE KITCHEN OR COOKING AREA AND ADJACENT SPACES HAVE NO CLEAR INTERIOR PARTITIONS AND THE 10FT DISTANCES WOULD PROHIBIT THE PLACEMENT OF A SMOKE ALARM OR SMOKE DETECTOR REQUIRED BY OTHER SECTIONS OF THE CODE. SMOKE ALARMS LISTED FOR USE IN CLOSE PROXIMITY TO A PERMANENTLY INSTALLED COOKING APPLIANCE.
- INSTALLATION NEAR BATHROOMS. SMOKE ALARMS SHALL BE INSTALLED NOT LESS THAN A 3 FOOT (0.91 M) HORIZONTAL DISTANCE FROM THE DOOR OR OPENING OF A BATHROOM THAT CONTAINS A BATHTUB OR SHOWER UNLESS THIS WOULD PREVENT PLACEMENT OF A SMOKE ALARM REQUIRED BY OTHER SECTIONS OF THE CODE.
- SMOKE ALARMS AND SMOKE DETECTORS SHALL NOT BE INSTALLED WITHIN A 36 IN. (910 MM) HORIZONTAL PATH FROM THE SUPPLY REGISTERS OF A FORCED AIR HEATING OR COOLING SYSTEM AND SHALL BE INSTALLED OUTSIDE OF THE DIRECT AIRFLOW FROM THOSE REGISTERS.
- SMOKE ALARMS AND SMOKE DETECTORS SHALL NOT BE INSTALLED WITHIN A 36 IN. (910 MM) HORIZONTAL PATH FROM THE BLADE OF A CEILING SUSPENDED (PADDLE) FAN.
- WHERE MORE THAN ONE SMOKE ALARMS REQUIRED TO BE INSTALLED WITHIN AN INDIVIDUAL DWELLING OR SLEEPING UNIT, THE SMOKE ALARMS SHALL BE INTERCONNECTED IN SUCH A MANNER THE THE ACTIVATION OF ONE ALARM WILL ACTIVATE ALL OF THE ALARMS IN THE INDIVIDUAL UNIT. THE ALARM SHALL BE CLEARLY AUDIBLE IN ALL BEDROOMS OVER BACKGROUND NOISE LEVELS WITH ALL INTERVENING DOORS CLOSED.

SMOKE ALARM NOTE

SMOKE ALARMS CANNOT BE INSTALLED WITHIN 36" OF THE TIP OF CEILING FAN R314.3.4

FAN NOTES:

KITCHEN AND BATH FANS RATED 3 SONES OR LESS ARE NOW REQUIRED 100CFM PER KITCHEN WITH INTERMITTED OPERATED, 50CFM PER BATHROOM WITH INTERMITTED OPERATED & 20 CFM WITH CONTINOUS OPERATED . DUCT SIZING LIST PER TABLE 7.1

PLUMBLING NOTE:

- HOT WATER SUPPLY PIPING 3/4" AND GREATER SHALL BE INSULATED PER CEC SECTION150.0 (J)2III
- ALL HOT WATER SUPPLY PIPING FROM THE HEATING SOURCE TO THE KITCHEN FIXTURES SHALL BE INSULATED PER CEC SECTION 150.0 (J)2.VI.

GENERAL COMMENTS

ELECTRICAL ALTERATION NOTE:

ALL OF THE ELECTRICAL TO BE REPLACE (TO COMPLY WITH NEW 2016 CEC) ARE SHOWN ON PLAN, OTHERWISE, EXISTING ELECTRICAL TO REMAIN ARE NOT SHOWN ON THIS PLAN

WRITTEN DIMENSIONS SHALL HAVE PRECEDENCE OVER SCALE DIMENSIONS. contractors and home owner builders shall verify and be responsible for dimensions and conditions of the project. DR Designs must be notified of any variation from the dimensions, conditions and specifications appearing on this plan.

DR DESIGNS
(530) 559 - 2539

NEW CONSTRUCTION

632 ZION STREET
NEVADA CITY, CA

ELECTRICAL

DUSTIN RUCKMAN

REVISIONS

1
2

APN# 005-230-010-000

19-0076 | 12/27/2019

E1

STAPLE HERE STAPLE HERE STAPLE HERE STAPLE HERE STAPLE HERE STAPLE HERE STAPLE HERE

To Agenda

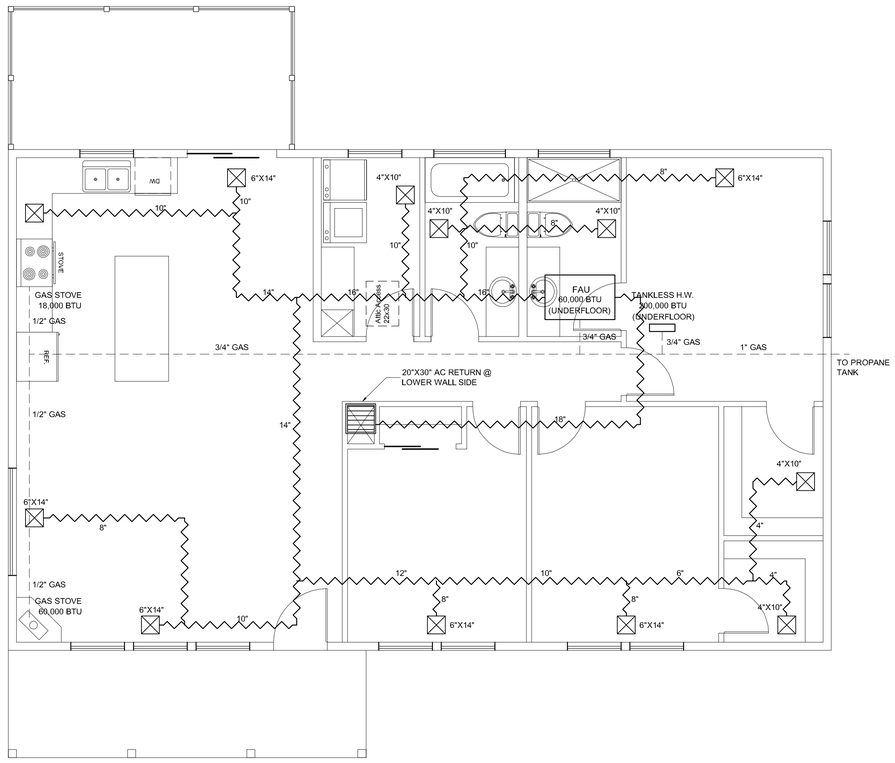

MECHANICAL PLAN

SCALE 1/4" = 1'-0"

COMPRESSOR NOTE:
A. Provide anchorage for all the compressors per 2016 CMC
B. Provide a service receptacle within 25 feet of each compressor per 2016 CMC

MECHANICAL SUPPLY VENT NOTE:

SUPPLY VENTS MUST BE MORE THAN 36" HORIZONTAL AWAY FROM SMOKE DETECTORS AND NOT BE IN THE DIRECT AIRFLOW OF VENTS, PER NFPA 72, Section 29.8.3.4.

ATTIC FURNACE NOTE:
1. Access opening to be large enough to remove largest piece of equipment, but at least 22in. x 30in.
2. Access to equipment along an unobstructed passageway which: a) Large enough to remove equipment, minimum 30in.x 30in. b) Not more than 20 ft. long at center line of passageway and continuous solid flooring not less than 24in. wide CMC 304.0
3. A level service space at least 30 in. deep and 30in. wide and 30" high located at the service side of equipment. CMC 304.0
4. Equipment shall be supported by substantial bases or hangers to accommodate both vertical and horizontal loads. CMC 303.4

HVAC PROVIDER SHALL PROVIDE THE CUT SHEET WITH VENT AND DUCT CALCULATION, THAT COMPLIANCE WITH MANUAL D PER ENERGY STANDARD, PRIOR TO THE INSTALLATION

LEDGEND

- AC ceiling mounted out put vent per manufacture
- Duct size per manufacture and installer that to compliance with manual D requirements prior to framing inspection
- Air return intake vent with filter (ceiling mounted)

WRITTEN DIMENSIONS SHALL HAVE PRECEDENCE OVER SCALE DIMENSIONS. contractors and home owner builders shall verify and be responsible for dimensions and conditions of the project. DR Designs must be notified of any variation from the dimensions, conditions and specifications appearing on this plan.

DR DESIGNS
(530) 559 - 2539

NEW CONSTRUCTION

632 ZION STREET
NEVADA CITY, CA

MECHANICAL

DUSTIN RUCKMAN

REVISIONS

1	
2	

APN# 005-230-010-000

19-0076	12/27/2019

M1

STAPLE HERE

To Agenda

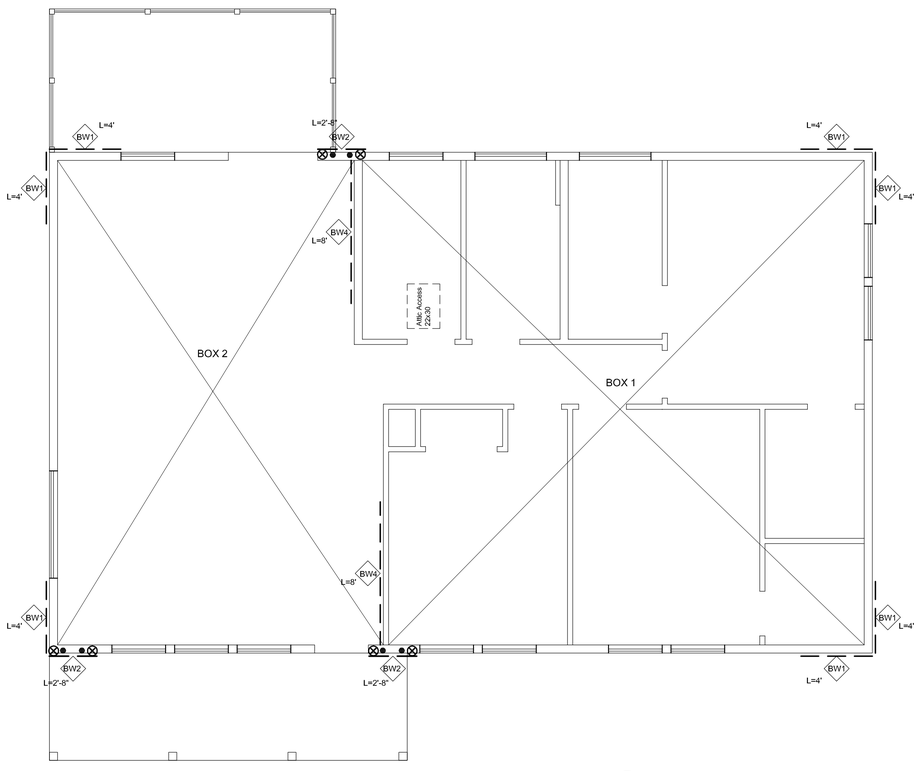

BRACEDWALL PLAN

SCALE 1/4" = 1'-0"

BRACED WALL SCHEDULE PER CHAPER R602

TYPE	SHEATING	BLOCKING	EN	FN	SILL NAILS	SILL BOLTS
BW1	3/8" OSB	YES	8d @ 12" O.C.	8d @ 12" O.C.	16d @ 16" O.C.	4'-0" O.C.
BW2	3/8" OSB SEE R602.10.6.1	YES	8d @ 12" O.C.	8d @ 12" O.C.	16d @ 8" O.C.	2 TOTAL
BW3	3/8" OSB	YES	8d @ 12" O.C.	8d @ 12" O.C.	16d @ 8" O.C.	3 TOTAL
BW4	1/2" GYPSUM BOARD MIN.	YES	NOTE 1 NAILS @ 7" O.C.	NOTE 1 NAILS @ 7" O.C.	16d @ 8" O.C.	3 TOTAL
PFH	SEE FIGURE R602.10.3.3					

NOTES:

- 1/2" GALVINAZED ROOFING NAILS, OR 1-1/4" SCREWS TYPE W OR S @ 7" O.C.
- ALL AB.'S AT SILL SHALL HAVE 3"X3"X5/16" PLATE WASHERS
- ALL BRACED PANELS AT FIRST FLOOR OF 2 STORY SHALL HAVE A MIN. OF 3-5/8" Ø X10" AB.'S

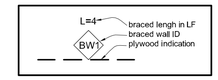

LEGEND

⊗ HDU5 / SSTB20

▬ SIMPSON LSTA30 STRAP FROM BEAM TO OVER DBL. STUDS BEHIND AWB BRACED WALL TYP.

● 5/8" A.B. W/ WASHER & NUT

BRACED WALL DETAILS

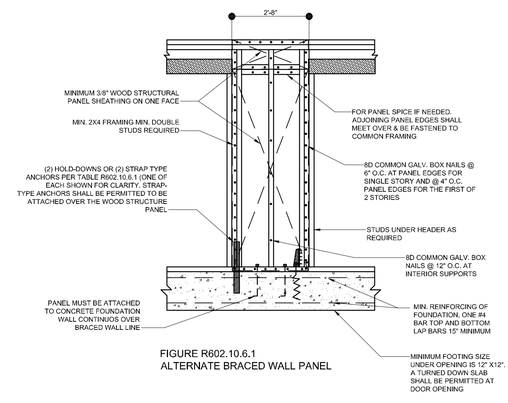

FIGURE R602.10.6.1
ALTERNATE BRACED WALL PANEL

WRITTEN DIMENSIONS SHALL HAVE PRECEDENCE OVER SCALE DIMENSIONS. contractors and home owner builders shall verify and be responsible for dimensions and conditions of the project. DR Designs must be notified of any variation from the dimensions, conditions and specifications appearing on this plan.

DR DESIGNS
(530) 559 - 2539

NEW CONSTRUCTION

632 ZION STREET
NEVADA CITY, CA

BRACED WALL PLAN

DUSTIN RUCKMAN

REVISIONS

1

2

APN# 005-230-010-000

19-0076 | 12/27/2019

SE1

STAPLE HERE

To Agenda

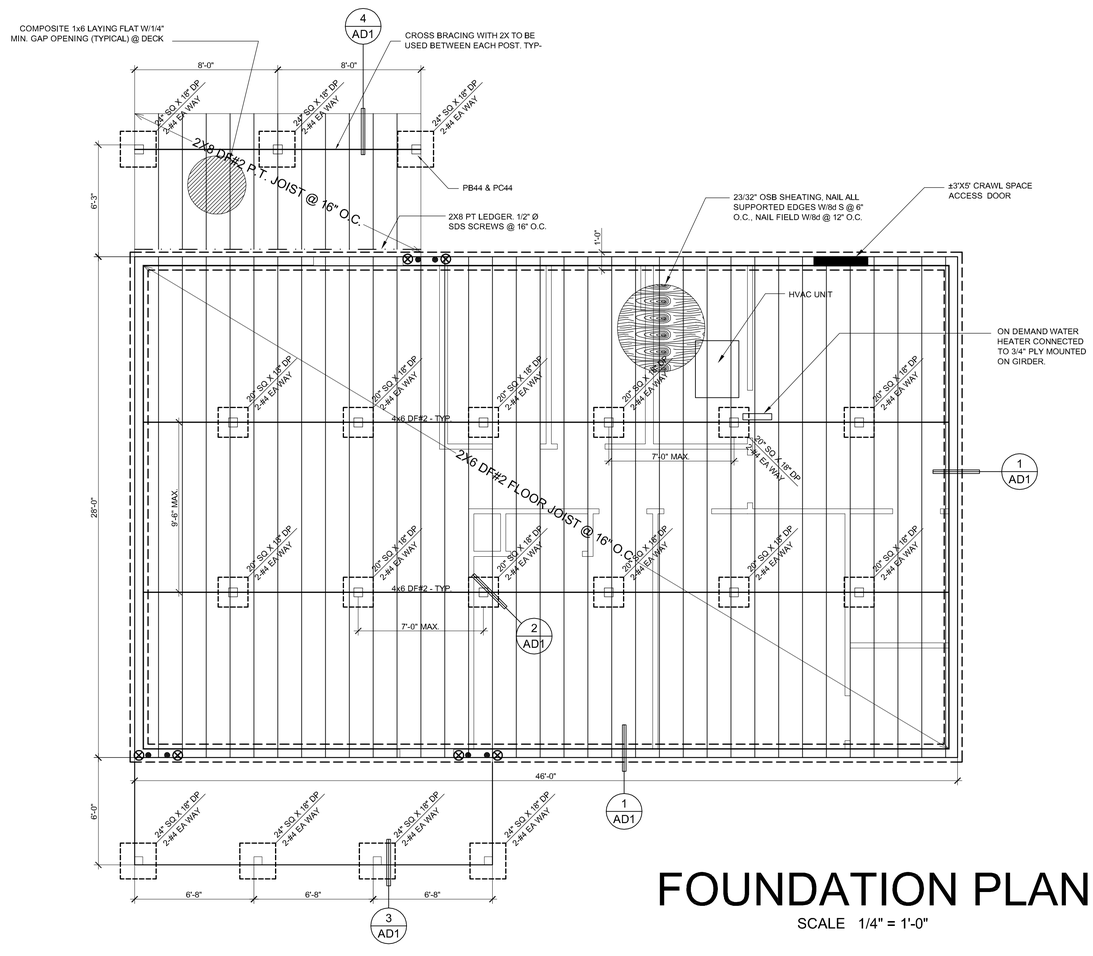

FOUNDATION PLAN

SCALE 1/4" = 1'-0"

BRACED WALL SCHEDULE PER CHAPTER 602

TYPE	SHEATHING	BLOCKING	EN	FN	SILL NAILS	SILL BOLTS
BW1	3/8" OSB	YES	8d @ 6" O.C.	8d @ 12" O.C.	16d @ 16" O.C.	4' - 0" O.C.
BW2	3/8" OSB	YES	8d @ 6" O.C.	8d @ 12" O.C.	16d @ 8" O.C.	2 TOTAL
BW3	3/8" OSB	YES	8d @ 6" O.C.	8d @ 12" O.C.	16d @ 8" O.C.	3 TOTAL
BW4	1/2" GYP	YES	7d COOLER NAILS @ 6" O.C.	7d COOLER NAILS @ 6" O.C.	16d @ 8" O.C.	3 TOTAL
PFH	SEE FIGURE R602.10.3.3					

NOTES:

- ALL BRACED PANELS AT FIRST FLOOR OF 2 STORY SHALL HAVE A MIN. OF 3-5/8" Ø X10" AB.'S
- ALL AB.'S AT SILL SHALL HAVE 3"X3"X5/16" PLATE WASHERS

GENERAL COMMENTS

WOOD TYPE

- JOISTS, GIRDERS, STRUCTURAL BLOCKING, AND SUPPORT POSTS SHALL BE WOOD OF NATURAL RESISTANCE TO DECAY OR PRESSURE TREATED LUMBER WHEN EXPOSED TO THE WEATHER. (CRC R317.1.3).

DRAINAGE

- SLOPE DRAINAGE 6" WITHIN THE FIRST 10FT FROM THE FOUNDATION WALL. IF PHYSICAL OBSTRUCTIONS OR LOT LINES PROHIBIT THE 10FT DISTANCE, A 2-5 PERCENT SLOPE SHALL BE PROVIDED TO AN APPROVED ALTERNATIVE METHOD OF DIVERTING THE WATER AWAY FROM THE FOUNDATION. IMPERVIOUS SURFACES SHALL ALSO BE SLOPED A MINIMUM OF 2 PERCENT FOR 10FT AWAY FROM STRUCTURES TO AN APPROVED DRAINAGE WAY. (CRC R401.3)

DECKS

- EXTERIOR DECK SUPPORT POSTS SHALL BE CROSS-BRACED IN TWO DIRECTIONS FOR LATERAL STABILITY IF OVER 2FT IN HEIGHT ABOVE GRADE, DECK FRAMING SHALL BE ANCHORED OT THE BUILDING WITH CONNECTORS NOT SUBJECT TO WITHDRAWL. (CRC R507)

CONCRETE

- FOOTINGS AND SLABS - CONCRETE FOUNDATION WALLS, RETAINING WALLS, BASEMENT WALLS, ETC FOR SEISMIC DESIGN CATEGORY D0,D1, AND D2 SHALL HAVE A COMPRESSIVE STRENGTH OF 2,500 PSI MINIMUM AND REBAR GRADE SHALL BE 60 MINIMUM. (CRC R404.1,3.3.1) NO HIGH STRENGTH CONCRETE SPECIAL INSPECTION IS REQUIRED. A MIX TAG SHALL BE REVIEWED BY THE FIELD INSPECTOR TO CONFIRM REQURIED CONPRESSIVE STRENGTH OF CONCRETE.

WRITTEN DIMENSIONS SHALL HAVE PRECEDENCE OVER SCALE DIMENSIONS. contractors and home owner builders shall verify and be responsible for dimensions and conditions of the project. DR Designs must be notified of any variation from the dimensions, conditions and specifications appearing on this plan.

DR DESIGNS
(530) 559 - 2539

NEW CONSTRUCTION

632 ZION STREET
NEVADA CITY, CA

FOUNDATION PLAN

DUSTIN RUCKMAN

REVISIONS

1

2

APN# 005-230-010-000

19-0076 | 12/27/2019

SE2

STAPLE HERE

To Agenda

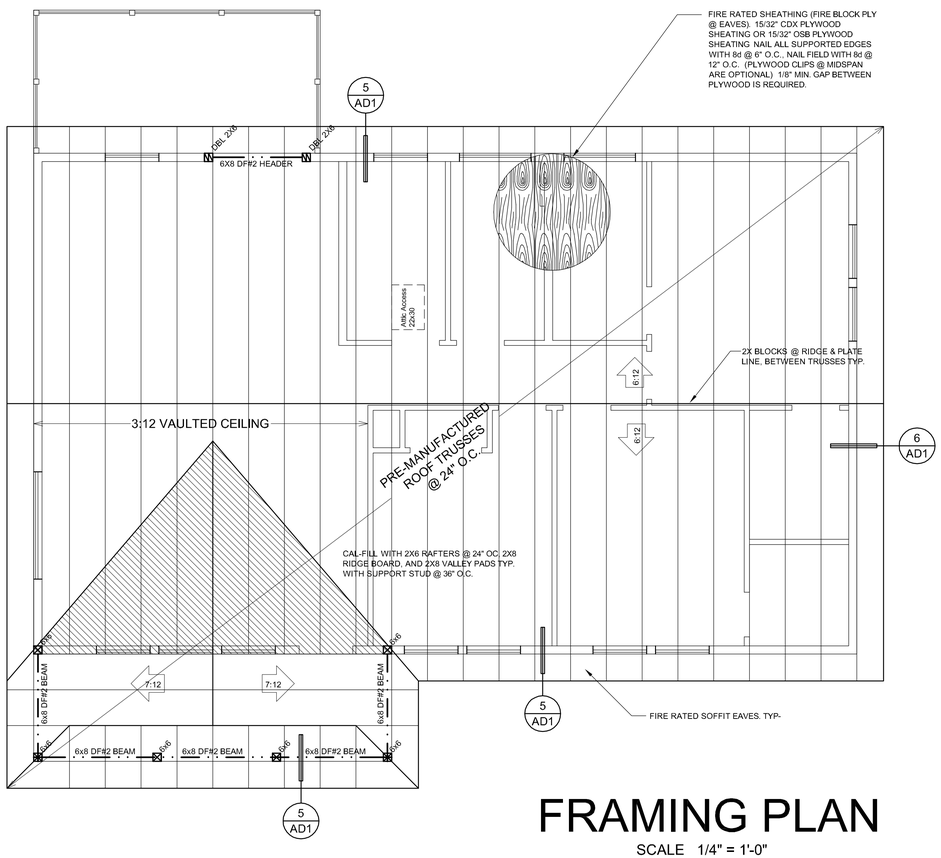

FRAMING PLAN

SCALE 1/4" = 1'-0"

HEADER ABOVE WINDOW, PORCH AND DOOR NOTE

SPAN FROM 0' TO 4' - 6x6
SPAN FROM 4' TO 6' - 6x8
SPAN FROM 6' TO ABOVE - 6x10

* TYPICAL HEADERS FOR ALL DOORS AND WINDOWS OTHERWISE NOTED ON PLAN.

* WINDOW SIDE TRIM WITH DBL STUDS FOR LARGER THAN 6'-0" SPAND OF THE SINGLE STORY AND @ THE 4'-0" SPAND OF THE 2 STORY.

GENERAL DETAILS

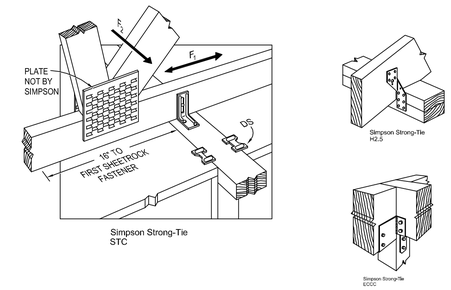

NOTES

WOOD TYPE

- JOISTS, GIRDERS, STRUCTURAL BLOCKING, AND SUPPORT POSTS SHALL BE WOOD OF NATURAL RESISTANCE TO DECAY OR PRESSURE TREATED LUMBER WHEN EXPOSED TO THE WEATHER. (CRC R317.1.3).

LEGEND

1 / SE2 — DETAIL BUBBLE CALL OUT. REFERENCE NOTED PAGES FOR DETAILS.

WRITTEN DIMENSIONS SHALL HAVE PRECEDENCE OVER SCALE DIMENSIONS. contractors and home owner builders shall verify and be responsible for dimensions and conditions of the project. DR Designs must be notified of any variation from the dimensions, conditions and specifications appearing on this plan.

DR DESIGNS
(530) 559 - 2539

NEW CONSTRUCTION

632 ZION STREET
NEVADA CITY, CA

ROOF FRAMING

DUSTIN RUCKMAN

REVISIONS

1
2

APN# 005-230-010-000

19-0076 | 12/27/2019

SE3

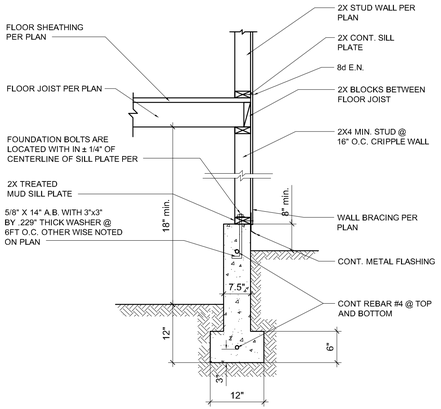

1 TYP. CONT. FOUNDATION

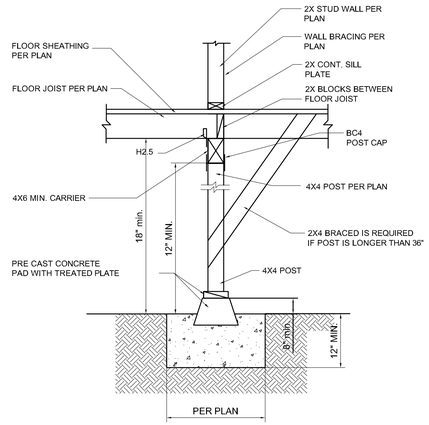

2 INTERIOR SUPPORT PAD

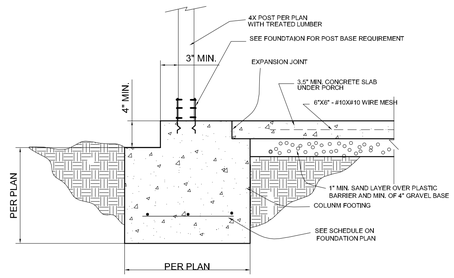

3 COLUMN FOOTING WITH CONT. PORCH SLAB

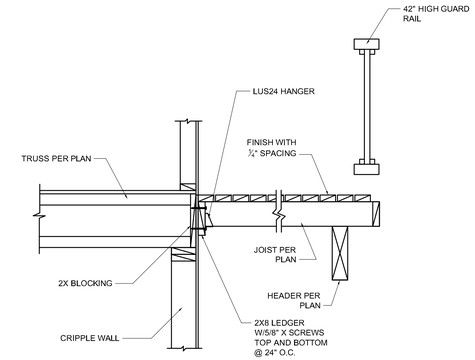

4 DECK SECTION

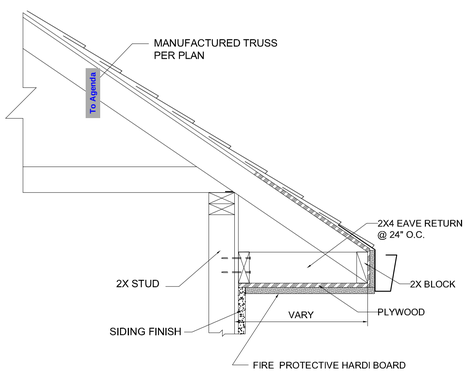

5 OVERHANG - FIRE RATED

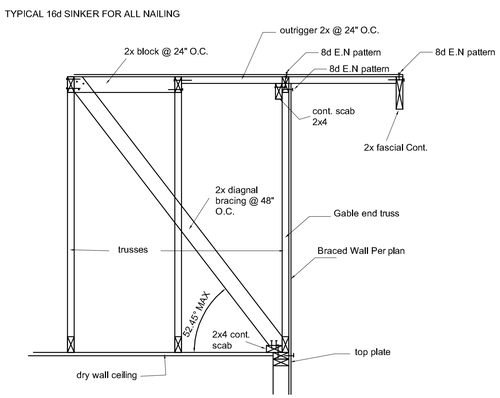

6 GABLE END BRACING TYP.

STAPLE HERE

WRITTEN DIMENSIONS SHALL HAVE PRECEDENCE OVER SCALE DIMENSIONS. contractors and home owner builders shall verify and be responsible for dimensions and conditions of the project. DR Designs must be notified of any variation from the dimensions, conditions and specifications appearing on this plan.

DR DESIGNS (530) 559 - 2539

NEW CONSTRUCTION

632 ZION STREET
NEVADA CITY, CA

DETAILS

DUSTIN RUCKMAN

REVISIONS

1

2

APN# 005-230-010-000

19-0076 | 12/27/2019

AD1

NO
PARKING
IN
DRIVEWAY

NO
PARKING
IN
DRIVEWAY

NO
PARKING
IN
DRIVEWAY

To Agen

To Agen

To Agen

HardiePlank® Lap Siding Product Description

HardiePlank® lap siding is factory-primed fiber-cement lap siding available in a variety of styles and textures. Please see your local James Hardie® product dealer for product availability. HardiePlank lap siding comes in 12 ft. lengths. Nominal widths from 5 1/4 in to 12 in. create a range of exposures from 4 in to 103/4 in

HardiePlank lap siding is also available with ColorPlus® Technology as one of James Hardie's prefinished products. ColorPlus® Technology is a factory applied, oven-baked finish available on a variety of James Hardie siding and trim products. See your local dealer for details and availability of products, colors, and accessories.

The HZ5® product line is right at home in climates with freezing temperatures, seasonal temperature variations, snow and ice. HZ5® boards are the result of our generational evolution of our time-tested products. We've evolved our substrate composition to be specifically designed to perform in conditions found in these climates. To ensure that its beauty matches its durability, we've engineered the surface for higher performance, giving it superior paint adhesion and moisture resistance. In addition, we've added a drip edge to the HardiePlank® HZ5® lap siding product to provide improved water management in conditions specific to HZ5® climates.

Select Cedarmill©

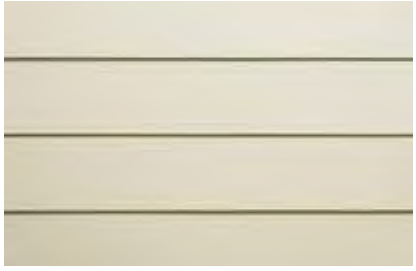

Smooth

Beaded Cedarmill©

Beaded Smooth

Custom Colonial Roughsawn®

Custom Colonial Smooth®

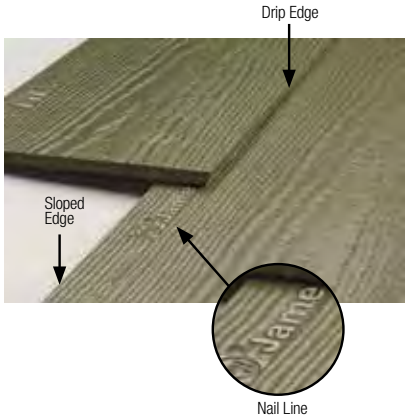

Installation of HardiePlank® Lap Siding

INSTALL A STARTER STRIP

HardiePlank® lap siding requires a starter strip beneath the first course to set it on the proper angle and to create a proper drip edge at the bottom of the siding. Starter strips are easily made by ripping 1¼ in. pieces of HardiePlank siding from full or partial planks.

The bottom of the starter strip should be installed even with the bottom of the mudsill or the bottom edge of the sheathing. The strip must be installed over the water-resistive barrier, but occasional gaps should be left in the starter strip to allow any accumulated moisture behind the siding to drain away safely.

10.1

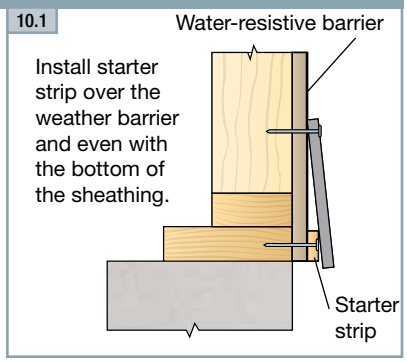

OVERVIEW OF HARDIEPLANK LAP SIDING

TIP: For accurate fastening, snap vertical chalk lines on the water-resistive barrier at the center of every stud location.

10.2

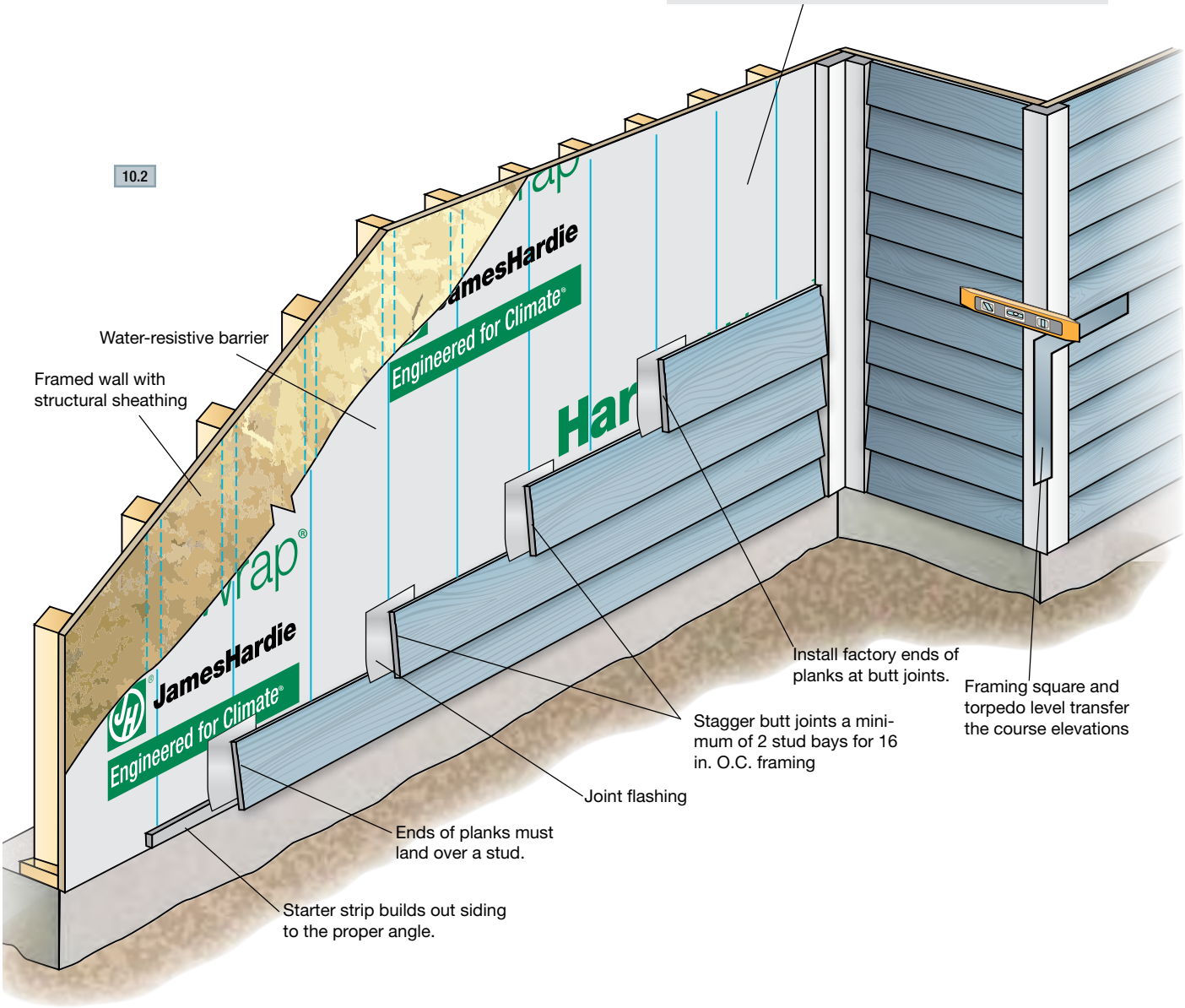

INSTALLING THE PLANKS

10.3

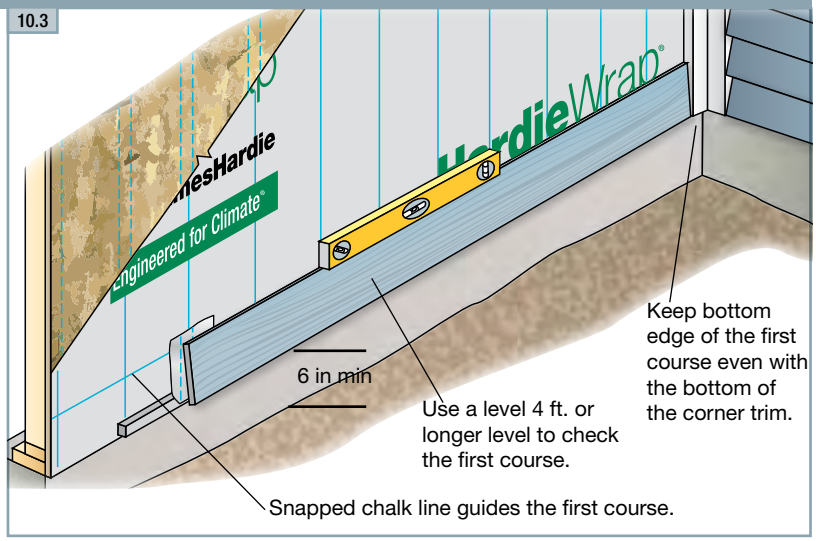

The first course of HardiePlank® siding is critical to the proper installation of the plank on the rest of the building. The first course should start at the lowest point of the house and within required clearances. Special attention should be made to ensure that it's straight and level. Attention should also be paid to staggering any butt joints in the planks so that the installation is attractive while making efficient use of material.

1. Use a level (4 ft. or longer) or chalked level line to be sure that the first course is level. As installation proceeds up the wall, periodically check the level and straightness of the courses. When correcting for flatness over products such as exterior insulation, use drywall shims. It is good practice to snap a chalk line every 3 to 5 courses to keep the planks straight and level.
2. Position the bottom edge of the first course of siding a minimum ¼ in below the edge of the starter strip (maintain required clearances) and secure.
3. Run the siding to the HardieTrim® board leaving a 1/8 in. gap between the siding and trim.

The bottom of the siding should be kept even with the bottom of the trim, or if desired, the trim may extend below the bottom of the siding. But the siding should never hang below the trim. ***When installing the first course make sure ground clearances are in accordance with James Hardie requirements and those of local codes.**

PLANK ALIGNMENT AT CORNERS

For the best looking installation, make sure that the heights of the plank courses match on both sides of a corner. Use a framing square, speed square or a level to match up the plank heights. Check every few courses to make sure proper heights are being maintained.

10.4

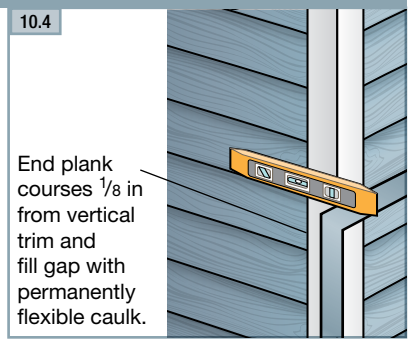

HANDLING

IMPORTANT: To prevent damage to the drip edge, extra care should be taken when removing planks from the pallet, while handling, and when installing with a lap gauge. Planks are interlocked together on the pallet, therefore they should be removed from the pallet horizontally (side to side) to allow planks to unlock themselves from one another.

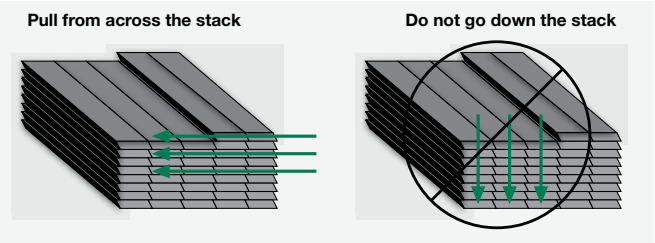

TIP: When taking planks from the pallet installation, avoid repeating the texture pattern by working across the pallet. Two to four planks can be removed from a stack at one time. But then material should be taken from adjacent stacks, again working across the pallet. Texture repeat is typically a concern on large walls with few breaks such as windows or doors.

Installation of HardiePlank® Lap Siding (cont.)

BLIND NAILING (nailing through top of plank)

Blind nailing is recommended for installing any type of HardiePlank® lap siding including ColorPlus® siding. With blind nailing, each course covers the fasteners on the course below, which provides a better looking installation.

For blind nailing HardiePlank lap siding, James Hardie recommends driving fasteners 1 in. from the top edge of the plank. Additionally fasteners should be placed no closer than 3/8 in from the ends of the plank.

10.5 **Blind nailing measurments**

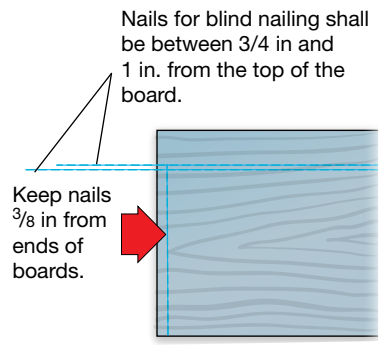

10.6 **Blind nailing**

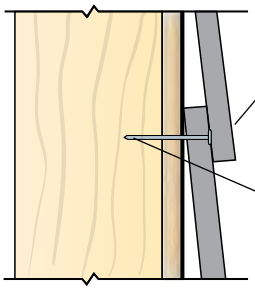

HardiePlank® HZ5® Lap Siding is manufactured with a nail line that should be used as a guide for proper nail placement when blind nailing. This nail line should not be used as a lap line.

Avoid placing fasteners near the top edge of the plank. This practice, called “high nailing”, may lead to loose planks, unwanted gaps or rattling. **Pin-backed corners may be done for aesthetic purposes only. Finish nails are recommended for pin-backs. Headed siding nails are allowed. Place pin-backs no closer than 1in. from plank ends & 3/4in. from plank edge into min. 3/8in. wood structural panel. Pin-backs are not a substitute for blind or face nailing**

FACE NAILING (nailing through the overlap at the bottom of the plank)

Although blind nailing is recommended by James Hardie, face nailing may be required for certain. installations including: installations in high wind areas, fastening into OSB or equivalent sheathing without penetrating a stud, or when dictated by specific building codes. Refer to Appendix D for related code matters.

10.7 **Face nailing**

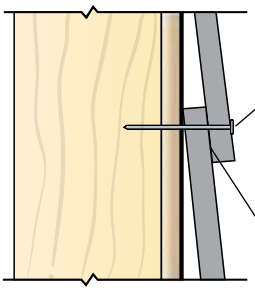

STAGGERING THE BUTT JOINTS

For walls longer than 12 ft, it is necessary to butt joint additional lengths of HardiePlank siding. These butt joints should be staggered to avoid noticeable patterns, which is determined by the placement of the first course. Butt joints between consecutive courses should be spaced apart by at least two stud bays for 16 in, o.c. framing or one bay for 24 in. o.c. framing.

While random placement of the planks is usually the most aesthetically pleasing, a progressive stagger pattern can make the job easier and faster without the pattern becoming too noticeable. With this strategy, the cut off piece for one course becomes the starter piece for a course above, making efficient use of materials and ensuring that all butt joints land on studs. The pattern can be modified for different stud placement.

10.8

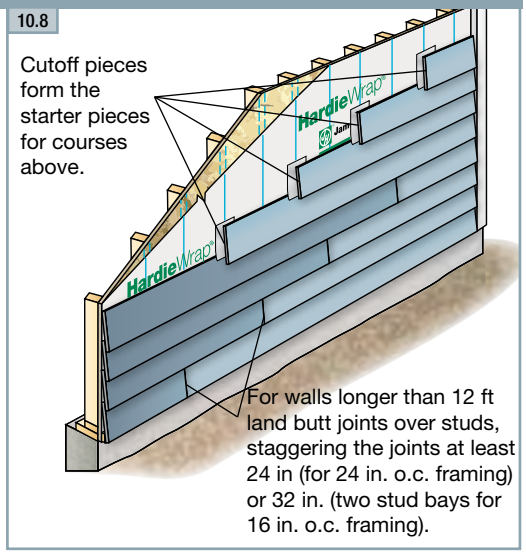

JOINT FLASHING

One or more of the following joint treatment options are required by code (as referenced 2009 IRC R703.10.2)

A. Joint Flashing (James Hardie recommended)

B. Caulking* (Caulking is not recommended for ColorPlus for aesthetic reasons as the Caulking and ColorPlus will weather differently. For the same reason, do not caulk nail heads on ColorPlus products.}

C. "H" jointer cover

Flashing behind butt joints provides an extra level of protection against the entry of water at the joint. James Hardie recommends 6 in. wide flashing that overlaps the course below by 1 in. Some local building codes may require different size flashing.

Joint-flashing material must be durable, waterproof materials that do not react with cement products. Examples of suitable material include finished coil stock and code compliant water-resistive barriers. Other products may also be suitable.

TIP: Joint flashing can be quickly and easily made by cutting a 6 in. wide section off a roll of housewrap. Tape the roll tightly at the cut mark and cut the section off using a miter saw with a carbide blade. Individual sheets then can be cut to length with a utility knife.

TIP: Use light-colored joint flashing when using light-colored ColorPlus lap siding or other siding with a light-colored finish. Dark-color joint flashings should be used on siding with dark finishes.

10.9

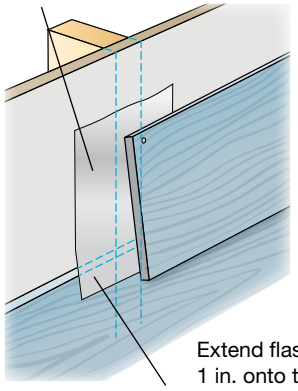

10.10

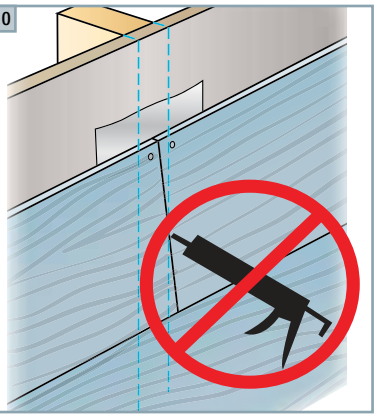

Caulking at HardiePlank lap siding butt joints is not recommended for ColorPlus for aesthetic reasons as the caulking and ColorPlus will weather differently. For the same reason, do not caulk exposed nail heads. Refer to the ColorPlus touch-up section for details

JOINT PLACEMENT AND TREATMENT

Butt joints in HardiePlank lap siding should always land on a stud. Butt joints between studs are not recommended and should be avoided. Whenever possible, factory-finished ends should be used at butt joints.

Place cut ends where the siding meets a corner, door, window trim, or other break in the wall where the joint is to be caulked. If cut ends are used in a butt joint between planks, James Hardie requires sealing cut ends for all products. For ColorPlus products, use the color-matched edge coater to seal the cut end.

10.11

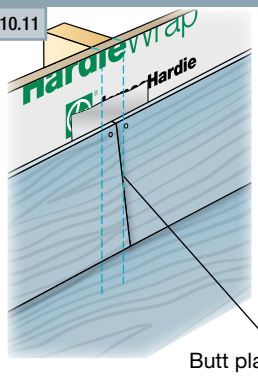

COLORPLUS® TIP: When installing HardiePlank lap siding with ColorPlus Technology, position the plank in the immediate area where the plank is to be fastened. Do not place the plank on the course below and slide into position. Doing so may scuff or scratch the ColorPlus finish on the installed piece.

Installation of HardiePlank® Lap Siding (cont.)

CONTINUING THE INSTALLATION

Once the initial course of HardiePlank® siding is fastened to the wall, continue installing successive courses with full 12 ft. pieces (follow the stagger pattern for longer walls), or until a window, door or other opening interrupts the course (fig 10.12). Notch planks as needed to fit around windows and doors. Again, be sure to seal all cut edges. Avoid placing butt joints directly above or below windows or above doors. Separate the joint from the opening by at least one course of siding.

Where butt joints land on a stud, make sure there is enough stud space for plank on both sides of the joint to land properly. Optimally both sides of a butt joint should land in the middle of a stud with 3/4 in landing space for each side. The minimum stud space for a plank to land is 3/8 in

Pay special attention to window, doors, and corners that have been trimmed before the siding goes on. Vertical trim boards may cover the king studs beside windows or doors, or they may cover up corner studs leaving no room for nailing the siding. In these places add extra studs as needed.

10.12 **Planking around windows**

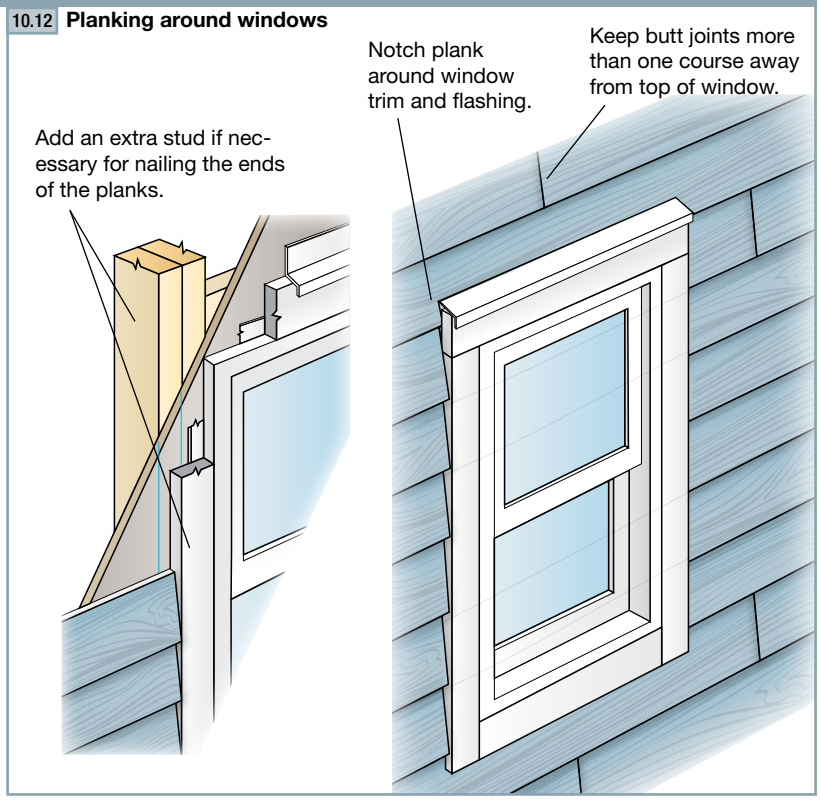

COLORPLUS TIP: HardiePlank lap siding with ColorPlus Technology is shipped with a protective laminate slip sheet, which should be left in place during cutting and fastening to reduce marring and scratching. The sheet should be removed immediately after each plank is installed.

If corners are trimmed with HardieTrim® 5/4, 4/4 boards, it may be necessary to measure and cut the first pieces of siding to make sure the butt joints land on studs.

INSTALLING HARDIEPLANK® SIDING ON GABLE WALLS

Siding gable walls can be challenging, and some of the keys to siding gable walls efficiently are determining the angle or pitch of the roof, properly staging materials, and ensuring that the plank lengths are measured accurately.

To estimate the amount of siding needed to complete a gable end, use the estimating tools located in Appendix C.

Stage enough material on the pump jacks or scaffolding to complete the gable end, but take care not to overload the staging. When possible, a cut table should be located on the pump jacks or scaffolding, which frees up crew members to work on other walls.

To cut planks for the gable:

1. Tack up a small scrap piece of siding where the first gable course is going.
2. Hold a second small piece of siding against the eave or rake board.
3. Trace the angle onto the scrap.
4. Cut that line and label the scrap as the template for the gable angle. The template can then be used to transfer the angle onto the larger pieces for cutting and installation.
5. Periodically check the angle as you progress up the wall.

The quickest way to measure and cut consecutive courses of siding for a gable is to work off the previous piece.

1. Cut and fit the lowest course of siding.
2. Before installing, lay it flat and measure down 1¼ in. from the top edge of the plank for the course overlap. Make a mark on both ends.
3. Set a piece of uncut siding on top of the first piece, aligning the bottom edge with the overlap marks. Transfer the length directly to the uncut piece.
4. Draw the gable angle with the template, cut the angle and then repeat the process for the next course.

TIP: Stainless steel fasteners are recommended when installing James Hardie® products.

10.13

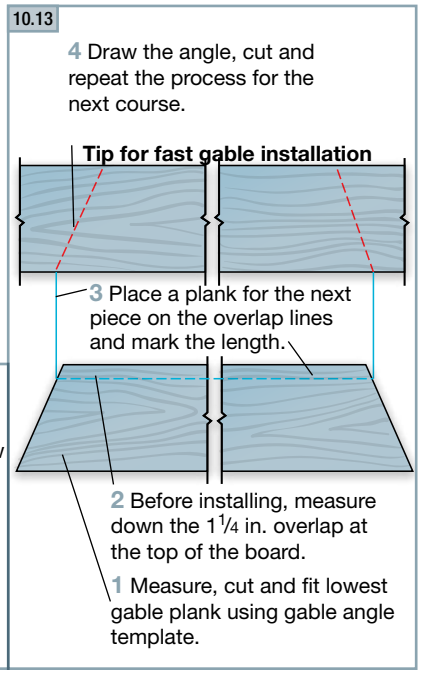

10.14 **Angle Template**

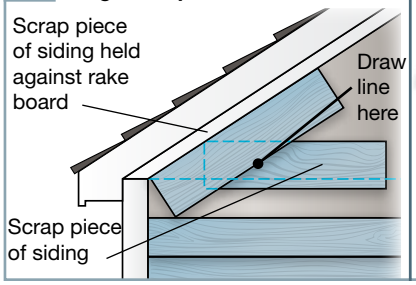

HARDIEPLANK® SIDING FASTENER SPECIFICATIONS

The Fastener Specifications table shows fastener options for a variety of different nailing substrates. Please refer to the applicable ESR report online (see back page) to determine which fastener meets your wind load design criteria.

Fastener Substrate			Approved Fastener
wood studs	blind nail	16 in o.c.	3 9
		24 in o.c.	16
	face nail	16 in o.c.	2 5
		24 in o.c.	2 5
steel studs*	blind nail	16 in o.c.	8 13
		24 in o.c.	
	face nail	16 in o.c.	7 12
		24 in o.c.	
Direct to Masonry			14
7/16 in OSB or equivalent (face nailed)			4

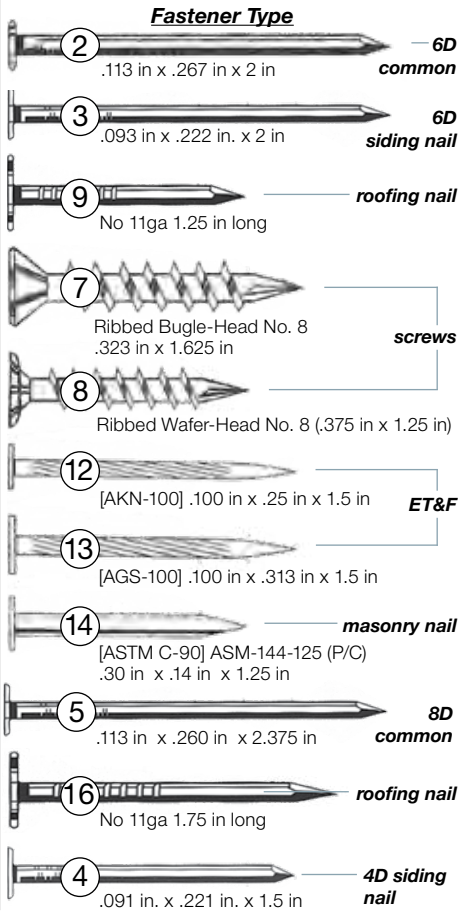

When blind fastening 9.5 in or wider product onto steel studs, use screws.

● *indicates recommended fasteners*

HardiePlank® Lap Siding

EFFECTIVE SEPTEMBER 2019

IMPORTANT: FAILURE TO FOLLOW JAMES HARDIE WRITTEN INSTALLATION INSTRUCTIONS AND COMPLY WITH APPLICABLE BUILDING CODES MAY VIOLATE LOCAL LAWS, AFFECT BUILDING ENVELOPE PERFORMANCE AND MAY AFFECT WARRANTY COVERAGE. FAILURE TO COMPLY WITH ALL HEALTH AND SAFETY REGULATIONS WHEN CUTTING AND INSTALLING THIS PRODUCT MAY RESULT IN PERSONAL INJURY. BEFORE INSTALLATION, CONFIRM YOU ARE USING THE CORRECT HARDIEZONE® PRODUCT INSTRUCTIONS BY VISITING HARDIEZONE.COM OR CALL 1-866-942-7343 (866-9-HARDIE)

STORAGE & HANDLING:

Store flat and keep dry and covered prior to installation. Installing siding wet or saturated may result in shrinkage at butt joints. Carry planks on edge. Protect edges and corners from breakage. James Hardie is not responsible for damage caused by improper storage and handling of the product.

⚠ CUTTING INSTRUCTIONS

OUTDOORS

1. Position cutting station so that airflow blows dust away from the user and others near the cutting area.
2. Cut using one of the following methods:
   - a. Best: Circular saw equipped with a HardieBlade® saw blade and attached vacuum dust collection system. Shears (manual, pneumatic or electric) may also be used, not recommended for products thicker than 7/16 in.
   - b. Better: Circular saw equipped with a dust collection feature (e.g. Roan® saw) and a HardieBlade saw blade.
   - c. Good: Circular saw equipped with a HardieBlade saw blade.

INDOORS

DO NOT grind or cut with a power saw indoors. Cut using shears (manual, pneumatic or electric) or the score and snap method, not recommended for products thicker than 7/16 in.

- DO NOT dry sweep dust; use wet dust suppression or vacuum to collect dust.
- For maximum dust reduction, James Hardie recommends using the "Best" cutting practices. Always follow the equipment manufacturer's instructions for proper operation.
- For best performance when cutting with a circular saw, James Hardie recommends using HardieBlade® saw blades.
- Go to jameshardiepros.com for additional cutting and dust control recommendations.

IMPORTANT: The Occupational Safety and Health Administration (OSHA) regulates workplace exposure to silica dust. For construction sites, OSHA has deemed that cutting fiber cement with a circular saw having a blade diameter less than 8 inches and connected to a commercially available dust collection system per manufacturer's instructions results in exposures below the OSHA Permissible Exposure Limit (PEL) for respirable crystalline silica, without the need for additional respiratory protection.

If you are unsure about how to comply with OSHA silica dust regulations, consult a qualified industrial hygienist or safety professional, or contact your James Hardie technical sales representative for assistance. James Hardie makes no representation or warranty that adopting a particular cutting practice will assure your compliance with OSHA rules or other applicable laws and safety requirements.

IMPORTANT: To prevent damage to the drip edge, extra care should be taken when removing planks from the pallet, while handling, and when installing with a lap gauge. Please see additional handling requirements on page 4.

GENERAL REQUIREMENTS:

- HardiePlank® lap siding can be installed over braced wood or steel studs, 20 gauge (33 mils) minimum to 16 gauge (54 mils) maximum, spaced a maximum of 24 in o.c. or directly to minimum 7/16 in thick OSB sheathing. See General Fastening Requirements. Irregularities in framing and sheathing can mirror through the finished application. Correct irregularities before installing siding.
- Information on installing James Hardie products over non-nailable substrates (ex: gypsum, foam,etc.) can be located in JH Tech Bulletin 19 at www.jamehardie.com
- A water-resistive barrier is required in accordance with local building code requirements. The water-resistive barrier must be appropriately installed with penetration and junction flashing in accordance with local building code requirements. James Hardie will assume no responsibility for water infiltration. James Hardie does manufacture HardieWrap® Weather Barrier, a non-woven non-perforated housewrap[1], which complies with building code requirements.
- Adjacent finished grade must slope away from the building in accordance with local building codes - typically a minimum of 6 in. in the first 10 ft..
- Do not use HardiePlank lap siding in Fascia or Trim applications.
- Do not install James Hardie products, such that they may remain in contact with standing water.
- HardiePlank lap siding may be installed on flat vertical wall applications only.
- For larger projects, including commercial and multi-family projects, where the span of the wall is significant in length, the designer and/or architect should take into consideration the coefficient of thermal expansion and moisture movement of the product in their design. These values can be found in the Technical Bulletin "Expansion Characteristics of James Hardie® Siding Products" at www.jameshardie.com.
- James Hardie Building Products provides installation /wind load information for buildings with a maximum mean roof height of 85 feet. For information on installations above 60 feet, please contact JH technical support.

Figure 1

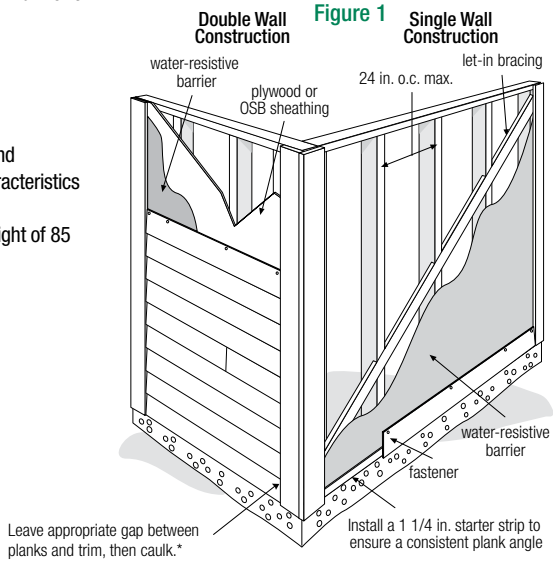

INSTALLATION: JOINT TREATMENT

One or more of the following joint treatment options are required by code *(as referenced 2009 IRC R703.10.2)*

A. Joint Flashing (James Hardie recommended)

B. Caulking* (Caulking is not recommended for ColorPlus for aesthetic reasons as the Caulking and ColorPlus will weather differently. For the same reason, do not caulk nail heads on ColorPlus products.)

C. "H" jointer cover

Figure 2

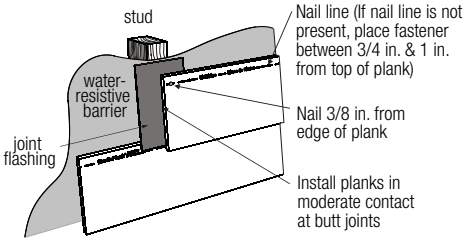

JamesHardie™

Note: Field painting over caulking may produce a sheen difference when compared to the field painted PrimePlus. *Refer to Caulking section in these instructions.
[1]For additional information on HardieWrap® Weather Barrier, consult James Hardie at 1-866-4Hardie or www.hardiewrap.com

CLEARANCE AND FLASHING REQUIREMENTS

Figure 3
Roof to Wall

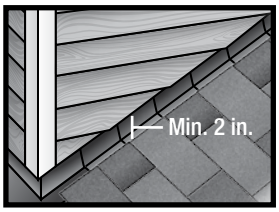

Figure 4
Horizontal Flashing

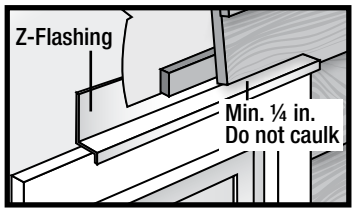

Figure 5
Kickout Flashing

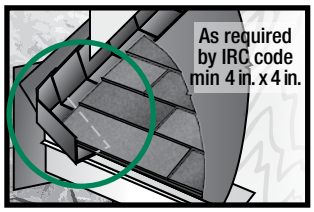

Figure 6
Slabs, Path, Steps to Siding

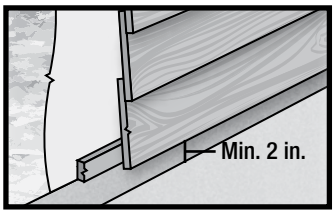

Figure 7
Deck to Wall

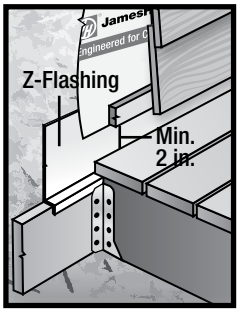

Figure 8
Ground to Siding

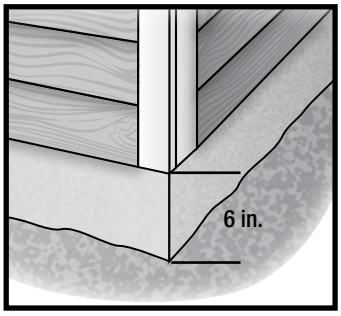

Figure 9
Gutter to Siding

Figure 10
Sheltered Areas

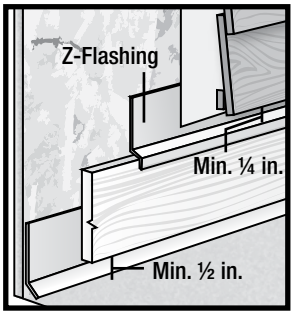

Figure 11
Mortar/Masonry

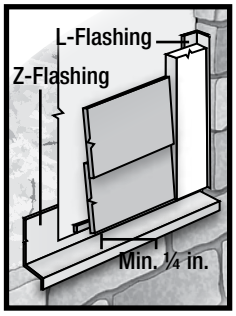

Figure 12
Drip Edge

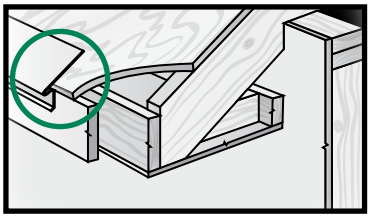

Figure 13
Block Penetration

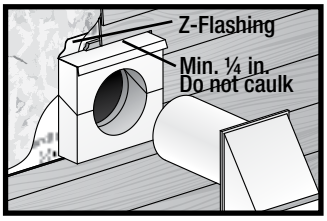

Figure 14
Valley/Shingle Extension

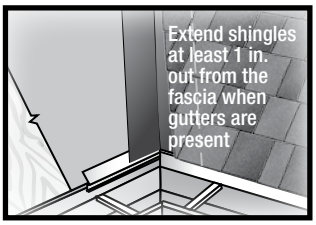

FASTENER REQUIREMENTS*

Refer to the applicable ESR report online to determine which fastener meets your wind load design criteria.

Blind Nailing is the preferred method of installation for HardiePlank® lap siding products. Face nailing should only be used where required by code for high wind areas and must not be used in conjunction with Blind nailing (Please see JH Tech bulletin 17 for exemption when doing a repair).

BLIND NAILING

Nails - Wood Framing
- Siding nail (0.09 in. shank x 0.221 in. HD x 2 in. long)
- 11ga. roofing nail (0.121 in. shank x 0.371 in. HD x 1.25 in. long)

Screws - Steel Framing
- Ribbed Wafer-head or equivalent (No. 8 x 1 1/4 in. long x 0.375 in. HD) Screws must penetrate 3 threads into metal framing.

Nails - Steel Framing
- ET & F Panelfast® nails or equivalent (0.10 in. shank x 0.313 in. HD x 1-1/2 in. long) Nails must penetrate minimum 1/4 in. into metal framing.

OSB minimum 7/16 in.
- Siding nail (0.09 in. shank x 0.215 in. HD x 1-1/2 in. long
- Ribbed Wafer-head or equivalent (No. 8 x 1 5/8 in. long x 0.375 in. HD).

FACE NAILING

Nails - Wood Framing
- 6d (0.113 in. shank x 0.267 in. HD x 2 in. long)
- Siding nail (0.09" shank x 0.221" HD x 2" long)

Screws - Steel Framing
- Ribbed Bugle-head or equivalent (No. 8-18 x 1-5/8 in. long x 0.323 in. HD) Screws must penetrate 3 threads into metal framing.

Nails - Steel Framing
- ET & F pin or equivalent (0.10 in. shank x 0.25 in. HD x 1-1/2 in. long) Nails must penetrate minimum 1/4 in. into metal framing.

OSB minimum 7/16 in.
- Siding nail (0.09 in. shank x 0.221 in. HD x 1-1/2 in. long)

*Also see General Fastening Requirements; and when considering alternative fastening options refer to James Hardie's Technical Bulletin USTB 5 - Fastening Tips for HardiePlank Lap Siding.

FASTENER REQUIREMENTS *continued*

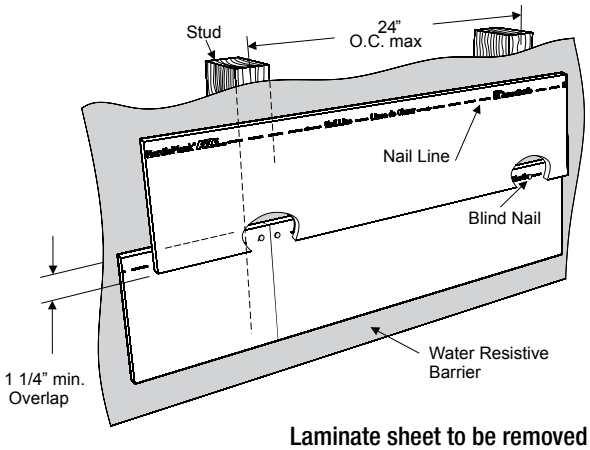

Figure 14

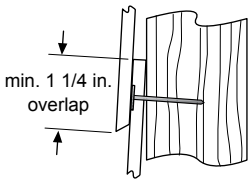

Figure 15

Minimum overlap for Both Face and Blind Nailing

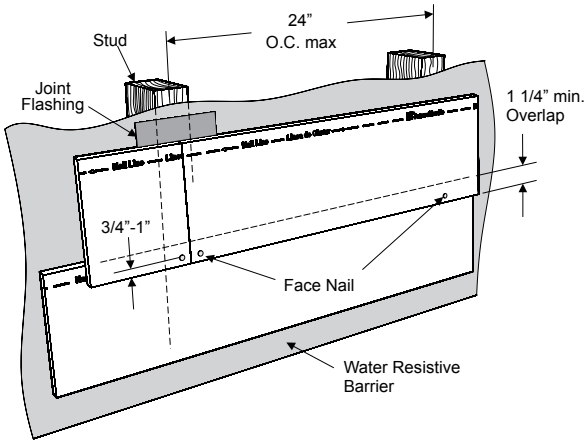

Laminate sheet to be removed immediately after installation of each course for ColorPlus® products.

Pin-backed corners may be done for aesthetic purposes only. Finish nails are recommended for pin-backs. Headed siding nails are allowed. Place pin-backs no closer than 1 in. from plank ends and 3/4 in. from plank edge into min. 3/8 in. wood structural panel. Pin-backs are not a substitute for blind or face nailing.

GENERAL FASTENING REQUIREMENTS

Fasteners must be corrosion resistant, galvanized, or stainless steel. Electro-galvanized are acceptable but may exhibit premature corrosion. James Hardie recommends the use of quality, hot-dipped galvanized nails. James Hardie is not responsible for the corrosion resistance of fasteners. Stainless steel fasteners are recommended when installing James Hardie® products near the ocean, large bodies of water, or in very humid climates.

Manufacturers of ACQ and CA preservative-treated wood recommend spacer materials or other physical barriers to prevent direct contact of ACQ or CA preservative-treated wood and aluminum products. Fasteners used to attach HardieTrim Tabs to preservative-treated wood shall be of hot dipped zinc-coated galvanized steel or stainless steel and in accordance to 2009 IRC R317.3 or 2009 IBC 2304.9.5

- Consult applicable product evaluation or listing for correct fasteners type and placement to achieve specified design wind loads.
- NOTE: Published wind loads may not be applicable to all areas where Local Building Codes have specific jurisdiction. Consult James Hardie Technical Services if you are unsure of applicable compliance documentation.
- Drive fasteners perpendicular to siding and framing.
- Fastener heads should fit snug against siding (no air space).
- NOTE: Whenever a structural member is present, HardiePlank should be fastened with even spacing to the structural member. The tables allowing direct to OSB or plywood should only be used when traditional framing is not available.

CUT EDGE TREATMENT

Caulk, paint or prime all field cut edges. James Hardie touch-up kits are required to touch-up ColorPlus products.

CAULKING

For best results use an Elastomeric Joint Sealant complying with ASTM C920 Grade NS, Class 25 or higher or a Latex Joint Sealant complying with ASTM C834. Caulking/Sealant must be applied in accordance with the caulking/sealant manufacturer's written instructions.
Note: some caulking manufacturers do not allow "tooling".

PNEUMATIC FASTENING

James Hardie products can be hand nailed or fastened with a pneumatic tool. Pneumatic fastening is highly recommended. Set air pressure so that the fastener is driven snug with the surface of the siding. A flush mount attachment on the pneumatic tool is recommended. This will help control the depth the nail is driven. If setting the nail depth proves difficult, choose a setting that under drives the nail. (Drive under driven nails snug with a smooth faced hammer - Does not apply for installation to steel framing).

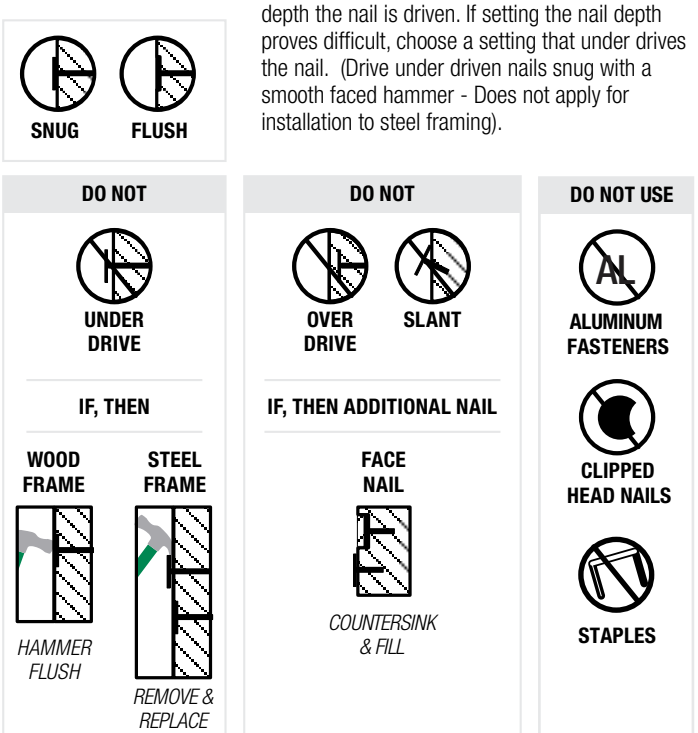

PAINTING

DO NOT use stain, oil/alkyd base paint, or powder coating on James Hardie® products. Factory-primed James Hardie products must be painted within 180 days of installation. 100% acrylic topcoats are recommended. Do not paint when wet. For application rates refer to paint manufacturers specifications. Back-rolling is recommended if the siding is sprayed.

COLORPLUS® TECHNOLOGY CAULKING, TOUCH-UP & LAMINATE

- Care should be taken when handling and cutting James Hardie ColorPlus® products. During installation use a wet soft cloth or soft brush to gently wipe off any residue or construction dust left on the product, then rinse with a garden hose.
- Touch up nicks, scrapes and nail heads using the ColorPlus® Technology touch-up applicator. Touch-up should be used sparingly. If large areas require touch-up, replace the damaged area with new HardiePlank® lap siding with ColorPlus® Technology.
- Laminate sheet must be removed immediately after installation of each course.
- Terminate non-factory cut edges into trim where possible, and caulk. Color matched caulks are available from your ColorPlus® product dealer.
- Treat all other non-factory cut edges using the ColorPlus Technology edge coaters, available from your ColorPlus product dealer.

Note: James Hardie does not warrant the usage of third party touch-up or paints used as touch-up on James Hardie ColorPlus products.

Problems with appearance or performance arising from use of third party touch-up paints or paints used as touch-up that are not James Hardie touch-up will not be covered under the James Hardie ColorPlus Limited Finish Warranty.

COVERAGE CHART/ESTIMATING GUIDE

Number of 12 ft. planks, does not include waste

COVERAGE AREA LESS OPENINGS	HARDIEPLANK® LAP SIDING WIDTH								
SQ (1 SQ = 100 sq.ft.)	(exposure)	5 1/4 4	6 1/4 5	7 1/4 6	7 1/2 6 1/4	8 6 3/4	8 1/4 7	9 1/4 8	9 1/2 8 1/4	12 10 3/4
1		25	20	17	16	15	14	13	13	9
2		50	40	33	32	30	29	25	25	19
3		75	60	50	48	44	43	38	38	28
4		100	80	67	64	59	57	50	50	37
5		125	100	83	80	74	71	63	63	47
6		150	120	100	96	89	86	75	75	56
7		175	140	117	112	104	100	88	88	65
8		200	160	133	128	119	114	100	100	74
9		225	180	150	144	133	129	113	113	84
10		250	200	167	160	148	143	125	125	93
11		275	220	183	176	163	157	138	138	102
12		300	240	200	192	178	171	150	150	112
13		325	260	217	208	193	186	163	163	121
14		350	280	233	224	207	200	175	175	130
15		375	300	250	240	222	214	188	188	140
16		400	320	267	256	237	229	200	200	149
17		425	340	283	272	252	243	213	213	158
18		450	360	300	288	267	257	225	225	167
19		475	380	317	304	281	271	238	238	177
20		500	400	333	320	296	286	250	250	186

This coverage chart is meant as a guide. Actual usage is subject to variables such as building design. James Hardie does not assume responsibility for over or under ordering of product.

PAINTING JAMES HARDIE® SIDING AND TRIM PRODUCTS WITH COLORPLUS® TECHNOLOGY

When repainting ColorPlus products, James Hardie recommends the following regarding surface preparation and topcoat application:

- Ensure the surface is clean, dry, and free of any dust, dirt, or mildew
- Repriming is normally not necessary
- 100% acrylic topcoats are recommended
- DO NOT use stain, oil/alkyd base paint, or powder coating on James Hardie® Products.
- Apply finish coat in accordance with paint manufacturers written instructions regarding coverage, application methods, and application temperature
- DO NOT caulk nail heads when using ColorPlus products, refer to the ColorPlus touch-up section

ADDITIONAL HANDLING REQUIREMENTS

IMPORTANT: To prevent damage to the drip edge, extra care should be taken when removing planks from the pallet, while handling, and when installing with a lap gauge. Planks are interlocked together on the pallet, therefore they should be removed from the pallet horizontally (side to side) to allow planks to unlock themselves from one another.

Pull from across the stack

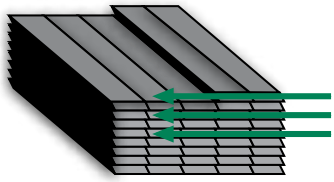

Do not go down the stack

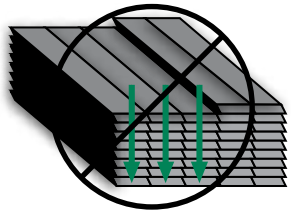

HS11117 P4/4 09/19

SILICA WARNING

DANGER: May cause cancer if dust from product is inhaled. Causes damage to lungs and respiratory system through prolonged or repeated inhalation of dust from product. Refer to the current product Safety Data Sheet before use. The hazard associated with fiber cement arises from crystalline silica present in the dust generated by activities such as cutting, machining, drilling, routing, sawing, crushing, or otherwise abrading fiber cement, and when cleaning up, disposing of or moving the dust. When doing any of these activities in a manner that generates dust you must (1) comply with the OSHA standard for silica dust and/or other applicable law, (2) follow James Hardie cutting instructions to reduce or limit the release of dust; (3) warn others in the area to avoid breathing the dust; (4) when using mechanical saw or high speed cutting tools, work outdoors and use dust collection equipment; and (5) if no other dust controls are available, wear a dust mask or respirator that meets NIOSH requirements (e.g. N-95 dust mask). During clean-up, use a well maintained vacuum and filter appropriate for capturing fine (respirable) dust or use wet clean-up methods - never dry sweep.

WARNING: This product can expose you to chemicals including respirable crystalline silica, which is known to the State of California to cause cancer. For more information go to P65Warnings.ca.gov.

RECOGNITION: In accordance with ICC-ES Evaluation Report ESR-2290, HardiePlank® lap siding is recognized as a suitable alternate to that specified in the 2006, 2009, 2012 & 2015 International Residential Code for One and Two-Family Dwellings, and the 2006, 2009, 2012 & 2015 International Building Code. HardiePlank lap siding is also recognized for application in the following: City of Los Angeles Research Report No. 24862, State of Florida Product Approval FL#13192, Miami-Dade County Florida NOA No. 17-0406.06, U.S. Dept. of HUD Materials Release 1263f, Texas Department of Insurance Product Evaluation EC-23, City of New York MEA 223-93-M, and California DSA PA-019. These documents should also be consulted for additional information concerning the suitability of this product for specific applications.

© 2019 James Hardie Building Products, Inc. All rights reserved TM, SM and ® denote trademarks or registered trademarks of James Hardie Technology Limited.

Product warranties, safety information and additional installation information are available at jameshardiepros.com

To Agenda

Style Line® Series

Vinyl Windows

Architectural Manual

Milgard® WINDOWS & DOORS

To Agenda

Instructions on how to use this manual:

This document has been designed for easy navigation and to quickly click to the section you need. Here's some important tips on using this document:

- Any item printed in red, will click through to the corresponding item.
- Click to any item in the Table of Contents on page 3. Click on the Milgard logo at the top of any page to return to the Table of Contents - FULL MANUAL ONLY.
- From each section's Quick Links page, click to any Drawing listed.
- From any Drawing page, click the "Go Back to Quick Links" box on the bottom right of the page to return to the list of drawings.
- Click on the links on the bottom of the page to go to Revit, SketchUp . PDF and .DWG files. Please note that you must have internet access for these links and you will be re-directed to the Milgard site.
- This document can also be navigated from Adobe Acrobat Bookmarks.

Revit, SketchUp, .PDF and .DWG files can be accessed
at **milgard.com** or clicking here:

Technical Resources

© Milgard Manufacturing, Inc.

Contents

COMPONENTS 4
- Frame 4
- Nail-On Fin 4
- Weep System 4
- Glazing Material 4
- Vent Panel 4
- Weatherstripping 5
- Roller Assembly 5
- Locking Assembly 5
- Screen 5
- Energy Packages 5

OPTIONS 5
- Grids 5
- Glass 5

Window Hardware 6

Premium Exterior Vinyl Finishes 7

Full Lifetime Warranty 8

Awning Window 9
- Configurations 10
- Minimum/Maximum Sizes 10
- Available Frame Styles 10
- Drawings - Quick Links 11
- Awning Window 12

Casement Window 22
- Configurations 23
- Minimum/Maximum Sizes 23
- Available Frame Styles 23
- Drawings - Quick Links 24
- Casement Window 25

Horizontal Sliding Window 41
- Configurations 42
- Minimum/Maximum Sizes 42
- Available Frame Styles 42
- Drawings - Quick Links 43
- Horizontal Sliding Window 44
- Double Vent Horizontal Sliding Window 53

Picture and Radius Window 54
- Configurations 55
- Minimum/Maximum Sizes 55
- Available Frame Styles 55
- Drawings - Quick Links 56
- Picture/Radius Window 57

Single Hung Window 67
- Configurations 68
- Minimum/Maximum Sizes 68
- Available Frame Styles 68
- Drawings - Quick Links 69
- Single Hung Window 70

© Milgard Manufacturing, Inc.

To Agenda

About Style Line® Series

The Style Line series vinyl (PVC) window blends the energy efficiency and low maintenance of vinyl with the clean lines and low profile appearance of an aluminum window.

The result is a window with maximum glass area. Available in white, tan, and clay (select regions), as well as premium painted exteriors. The windows will maintain their color and shape and can be constructed to your exact size specifications, subject to review.

COMPONENTS

Frame

Frame components are made from high performance polyvinyl chloride, available in White or Tan, with Clay available in select regions or premium painted upgrade window frames. The Style Line series is designed to offer a low profile appearance, ideal for contemporary homes or whenever maximum glazing area is desired. Mitered corners are precision welded resulting in an air and water tight seal.

Standard frame depth is 2-7/8", ideal for both new construction and or use as a replacement window.

Nail-On Fin

A 1-1/16" pre-punched nail flange extends around the perimeter frame, securing the window in rough openings and acting as a part of the flashing system. The nailing fin may be removed as needed for particular block frame applications. Fin setbacks are available in 1-3/8" from outside of frame; also in 1" for our SW locations using 3 coat stucco applications (not available at all locations).

Weep System

Hollow sill construction and offset weep holes that release any accumulated moisture from track and help prevent blow back, or water seeping to the interior caused by a combination of wind and rain.

Glazing Material

AAMA approved glazing tape adheres glass to the fixed panel frame which seals and cushions the glass. Rigid vinyl setting blocks are used to support the unit above the sill, preventing glass slippage. Extruded vinyl glazing (snap-in) bead is applied around the exterior edge.

Glass insulating dual glazed panes, 3/4" in overall thickness (1" overall on picture frame), are butyl sealed for energy efficiency. Specialty glass options are available upon request.

Vent Panel

The vent panel has an "L" shaped lip that fully interlocks with the vertical meeting rail, adding security and preventing air and water penetration. Its roller assembly rides on a monorail track for easy operation and durability. This raised track in the frame sill helps keep the vent panel free from interference by foreign particles that may collect in the sill.

© Milgard Manufacturing, Inc.

To Agenda

Weatherstripping

Silicone-treated water-repellent polypropylene fin seal weatherstripping provides a durable, weather tight seal. This weatherstripping is installed in an integral, continuous keyway around three sides of the vent panel and interlock.

Roller Assembly

Self-lubricating, wear resistant, dual nylon rollers provide flexible, free-wheeling, smooth and silent operation. The adjustable rollers are engineered for reduction of friction and elimination of torque on the vent frame.

Locking Assembly

A Positive Action™ lock mechanism provides security and a tighter seal. The lock engages when the window is closed.

Screen

Screen frames are cambered aluminum, reinforced with rigid plastic corner clips. Screens come standard with matching frame color.

The fiberglass charcoal screen mesh is strong, durable and easy to replace. Two plastic pulls located on the screen allow you to install from inside or outside of house.

Energy Packages

Milgard adheres to ENERGY STAR® v6 requirements to meet or exceed U-Factor and Solar Heat Gain Coefficient (SHGC) criteria for all ENERGY STAR® zones.

Milgard also offers high energy performance options for the ultimate in energy efficiency. Energy efficient windows could include one or more of the following features based on your climate.

- SunCoat® or SunCoatMAX®
- EdgeGardMAX®
- Argon or Krypton
- 4th Surface

For more details on Milgard Energy Efficient packages, visit www.milgard.com/learn/energy-efficiency/energy-efficient-components

To check the energy performance of all Milgard windows and doors, use our Energy Calculator at:

milgard.com/energy-calculator

OPTIONS

Grids

Available in 5/8" flat. Color-matched to frame.

1-1/16" sculptured grid available in select markets – check with your Milgard representative.

Glass

Refer to glass section. Many more options are available. Please check with your Milgard Representative.

Caution: The use of petroleum based fuels or solvents as release agents in stucco wall installations or glass cleaning will chemically attack materials used in seals and other components, and voids the Milgard Warranty. The use of wax based release agents is recommended.

Expanding foam for insulation purposes should not be used.

© Milgard Manufacturing, Inc.

To Agenda

Window Hardware

Single Hung and Horizontal Slider

Positive Action™ Lock – Closes and locks window securely in one action.

Casement and Awning

Standard Handle with Sash Lock

© Milgard Manufacturing, Inc.

To Agenda

Premium Exterior Vinyl Finishes

Standard - Matching interior

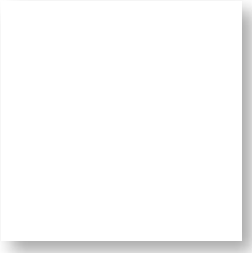
White

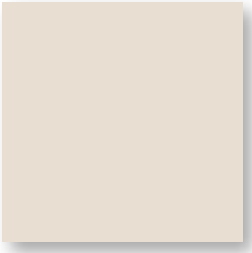
Tan

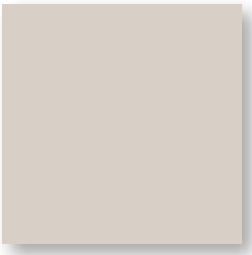
Clay
(available in select regions)

Premium - White interior only

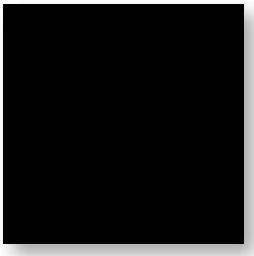
Bronze

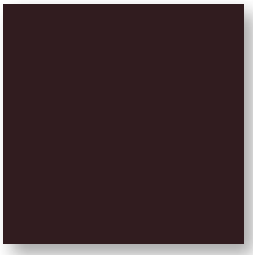
Espresso

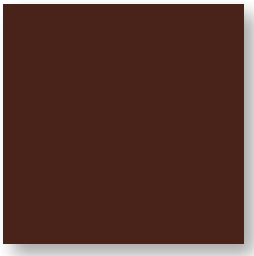
Classic Brown

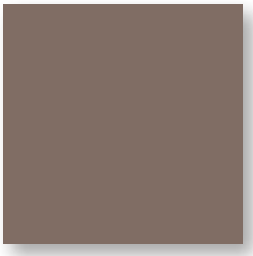
Tweed

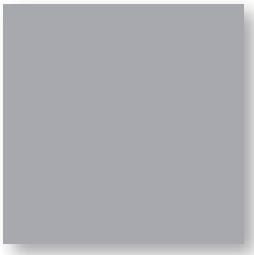
Silver

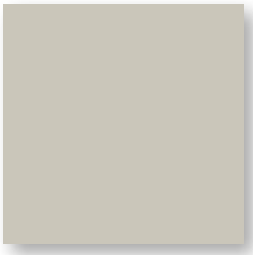
Fog

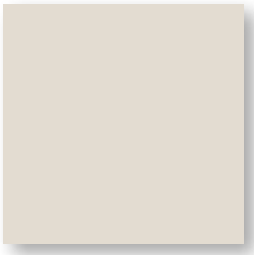
Sand

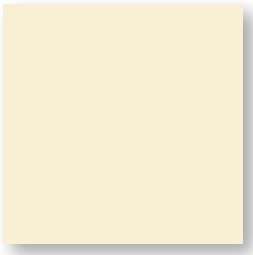
Ivory

© Milgard Manufacturing, Inc.

To Agenda

Full Lifetime Warranty

At Milgard, we build our windows and doors to last. With the dedication to quality that we put into building the best windows in the business, it wouldn't make sense to back them with anything but the best warranty in the business. That's why we back every properly installed window and door for as long as the homeowner owns their home–including parts and labor.

It's why you can be sure you won't find any windows better than Milgard.

For complete warranty details, visit milgard.com.

Why Milgard?

Quality

Milgard offers award-winning windows and patio doors built for long-lasting comfort. For over 50 years, industry experts have consistently recognized Milgard as a trusted brand. By producing our vinyl and fiberglass frame materials in-house, we can more closely monitor for quality control. Milgard windows and patio doors stand up, while standing out.

Experience

Since 1962, Milgard Windows & Doors has designed and assembled superior, top quality windows and patio doors, backed with a Full Lifetime Warranty. Milgard engineers are known for their industry-leading designs using patented technologies. Whatever your project calls for, Milgard has the right product that can beautifully reflect your vision. From new construction to home remodeling, all Milgard windows and doors are custom made to your exact specifications.

Service

We serve the Western U.S. and Canada with a dozen full-service facilities and customer care centers. Our belief is that by being close to our customers, we can provide them better service.

© Milgard Manufacturing, Inc.

To Agenda

Single Hung Window

The Style Line® Series vinyl (PVC) Single Hung window blends the energy efficiency and low maintenance of vinyl with clean lines and a narrow profile.

The result is a window with maximum glass area. Available in white, tan, and clay (select regions), as well as premium painted exteriors. The windows will maintain their color and shape and can be constructed to your exact size specifications.

Please also see:

Components

Options

Hardware

Premium Exterior Vinyl Finishes

Full Lifetime Warranty

© Milgard Manufacturing, Inc.

Single Hung Window

Configurations

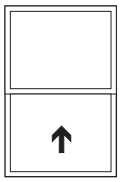

Single Hung

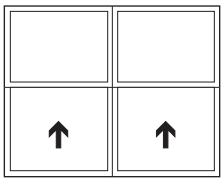

Double Single Hung

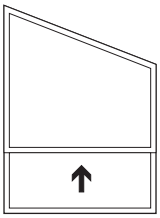

Gable Top Single Hung

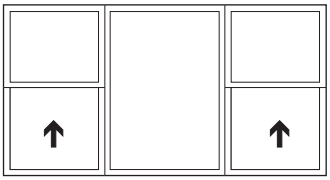

Double Single Hung/Center Lite

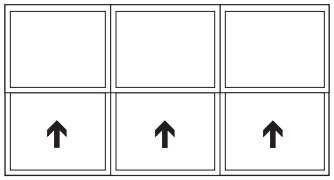

Triple Single Hung

Minimum/Maximum Sizes

Single-Hung
– Min $1^{0}2^{0}$ Max $4^{0}6^{6}$

Double Single-Hung
– Min $2^{0}2^{0}$ Max $7^{0}6^{6}$

Triple Single-Hung
– Min $3^{0}2^{0}$ Max $9^{0}6^{6}$

Double Single-Hung with Center Lite
– Min $3^{0}2^{0}$ Max $9^{0}6^{6}$

Gable Top Single Hung
– Min $1^{0}2^{6}$ Max $4^{0}6^{6}$

Minimum egress is $3^{0}5^{0}$ with a 30″ bar set or $2^{6}6^{0}$ with a 36″ bar set.
SH vent set: 12, 15, 18, 21, 24, 27, 30, 33 or 36.

Available Frame Styles

1-3/8″ Nail Fin Setback
1″ Nail Fin Setback with Stucco Key
1″ Nail Fin Setback with J-Channel
Contour Z-bar
Flat Z-bar
Block Frame (no fin)

NOTE: For engineering approval contact your Milgard representative for any configuration over 40 square feet. Each Milgard Manufacturing plant reserves the right to alter or change sizes and configurations according to location capabilities. Ask your Milgard rep about specialty applications. Windows over 40 square feet shipped open for field glazing. Varies by location.

*Not all frame styles available at all Milgard locations.
Contact your Milgard Representative for more information.*

© Milgard Manufacturing, Inc.

To Agenda

Drawings - Quick Links

Single Hung Window

70—1-3/8" Fin Setback

71—1-" Fin Setback with Stucco Key

72—1-3/8-" Fin Setback with Stucco Key

73—1" Fin Setback with J-channel

74—1-1/2" Contour Z-bar

75—1-1/2" Flat Z-bar

76—Double Single Hung - 1-3/8" Fin Setback

77—Double Single Hung above 2 Lites - 1-3/8" Fin Setback

78—Double Single Hung below 2 Lites - 1-3/8" Fin Setback

79—Single Hung above - Block Frame

80—True Divide - Block Frame

81—Triple Single Hung - Block Frame

82—Single Single Hung - Z-bar frame

Revit, SketchUp, .PDF and .DWG files can be accessed at
milgard.com/professionals/technical-resources

© Milgard Manufacturing, Inc.

To Agenda

Single Hung Window

1-3/8" Fin Setback

CAD File Scale	View	File Name	Units
NTS	Horizontal & Vertical	6210-01SH	Inch

More Technical Documents can be found at **milgard.com/professionals**

Due to continual research and development, details may be changed at any time. ©2013 Milgard Mfg.

SINGLE HUNG
SERIES 6210

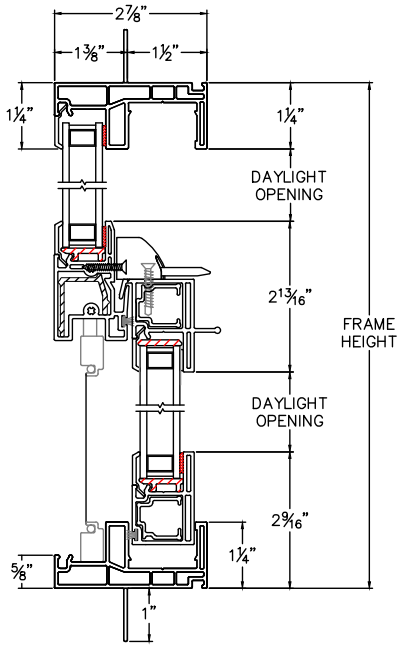

HEAD & SILL

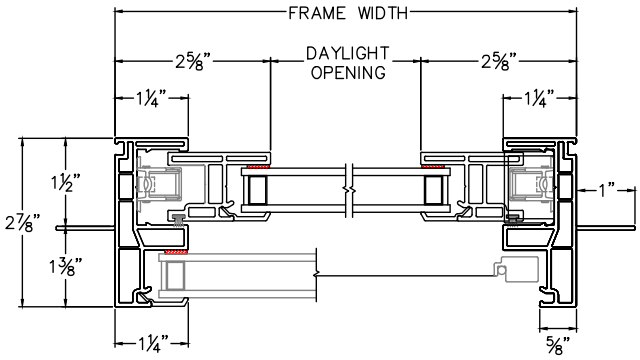

JAMBS

Revit, SketchUp, .PDF and .DWG files can be accessed at
milgard.com/professionals/technical-resources

Go back to Quick Links

© Milgard Manufacturing, Inc.

To Agenda

Single Hung Window

1-" Fin Setback with Stucco Key

CAD File Scale	View	File Name	Units
NTS	Horizontal & Vertical	6230-01SH	Inch

More Technical Documents can be found at **milgard.com/professionals**

Due to continual research and development, details may be changed at any time. ©2013 Milgard Mfg.

SINGLE HUNG
SERIES 6230

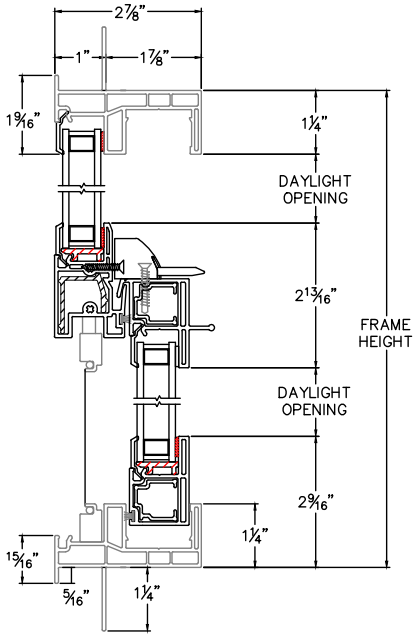

HEAD & SILL

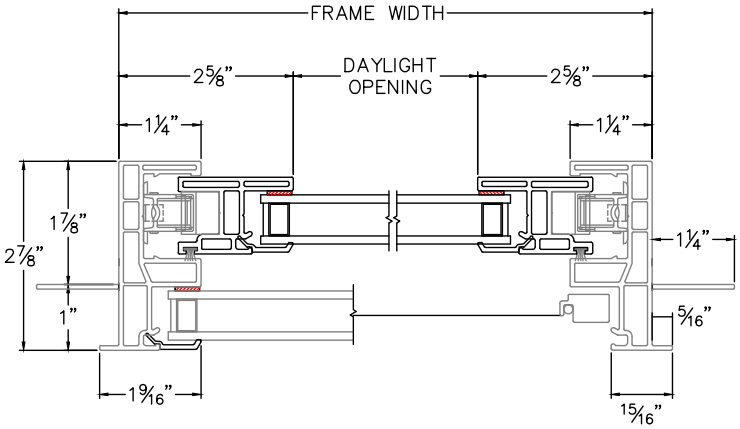

JAMBS

Revit, SketchUp, .PDF and .DWG files can be accessed at
milgard.com/professionals/technical-resources

Go back to Quick Links

© Milgard Manufacturing, Inc.

To Agenda

Single Hung Window

1-3/8-" Fin Setback with Stucco Key

CAD File Scale	View	File Name	Units	Revision
NTS	Horizontal & Vertical	StyleLine_6211_SH_1.375in_stucco	Inch	6/2015

More Technical Documents can be found at **milgard.com/professionals**

Due to continual research and development, details may be changed at any time. ©2013 Milgard Mfg.

SINGLE HUNG
SERIES 6211

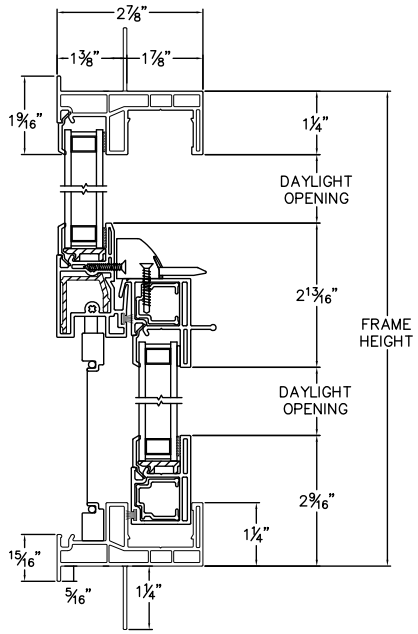

HEAD & SILL

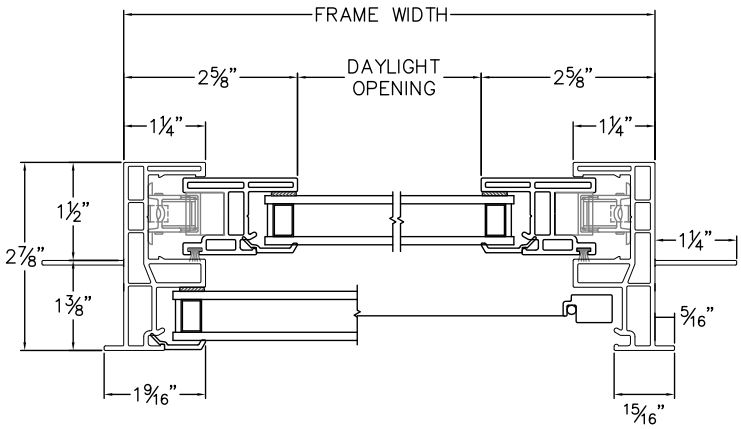

JAMBS

Revit, SketchUp, .PDF and .DWG files can be accessed at
milgard.com/professionals/technical-resources

Go back to Quick Links

© Milgard Manufacturing, Inc.

To Agenda

Single Hung Window

1″ Fin Setback with J-channel

CAD File Scale	View	File Name	Units
NTS	Horizontal & Vertical	6230J-01SH	Inch

More Technical Documents can be found at **milgard.com/professionals**

Due to continual research and development, details may be changed at any time. ©2013 Milgard Mfg.

SINGLE HUNG
SERIES 6230J

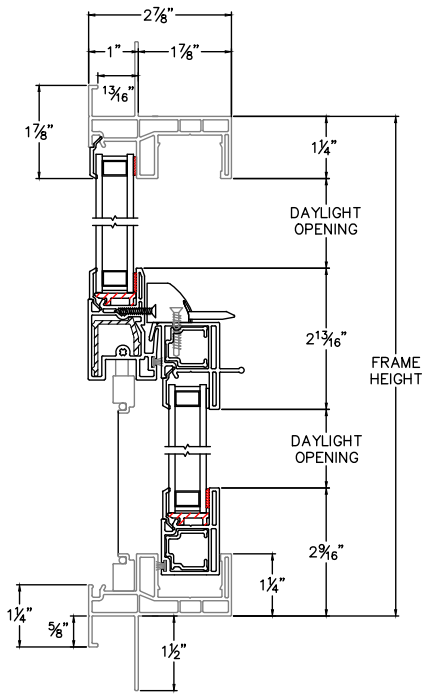

HEAD & SILL

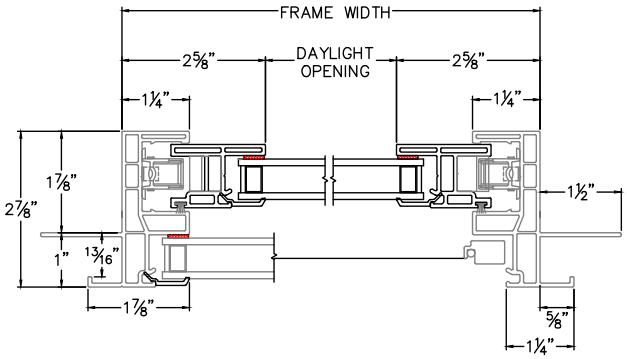

JAMBS

Revit, SketchUp, .PDF and .DWG files can be accessed at
milgard.com/professionals/technical-resources

Go back to Quick Links

© Milgard Manufacturing, Inc.

To Agenda

Single Hung Window

1-1/2" Contour Z-bar

CAD File Scale	View	File Name	Units
NTS	Horizontal & Vertical	6270-01SH	Inch

More Technical Documents can be found at **milgard.com/professionals**

Due to continual research and development, details may be changed at any time. ©2013 Milgard Mfg.

SINGLE HUNG
SERIES 6270

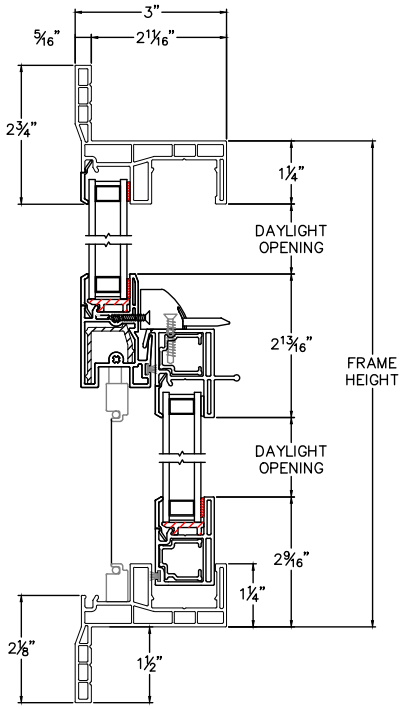

HEAD & SILL

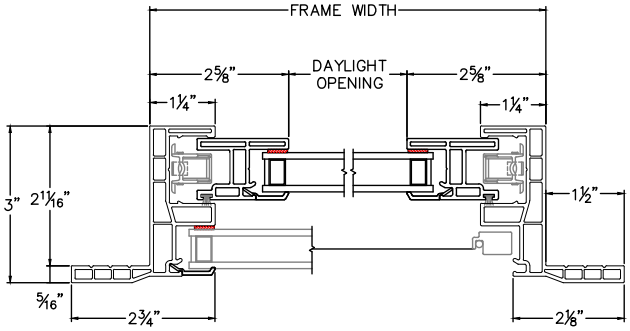

JAMBS

Revit, SketchUp, .PDF and .DWG files can be accessed at
milgard.com/professionals/technical-resources

Go back to Quick Links

© Milgard Manufacturing, Inc.

To Agenda

Single Hung Window

1-1/2" Flat Z-bar

CAD File Scale	View	File Name	Units
NTS	Horizontal & Vertical	6270-02SH	Inch

More Technical Documents can be found at **milgard.com/professionals**

Due to continual research and development, details may be changed at any time. ©2013 Milgard Mfg.

SINGLE HUNG
SERIES 6270

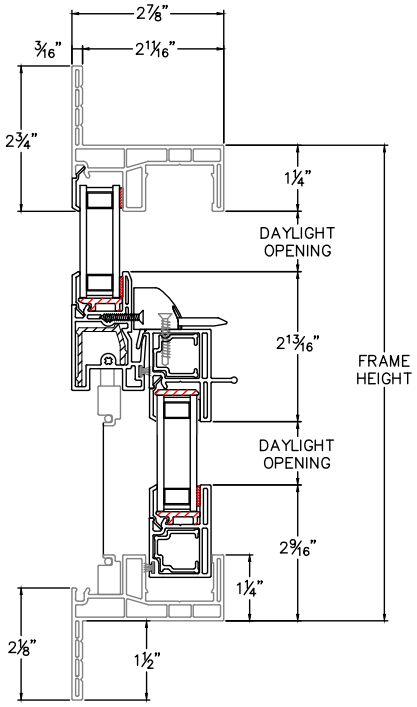

HEAD & SILL

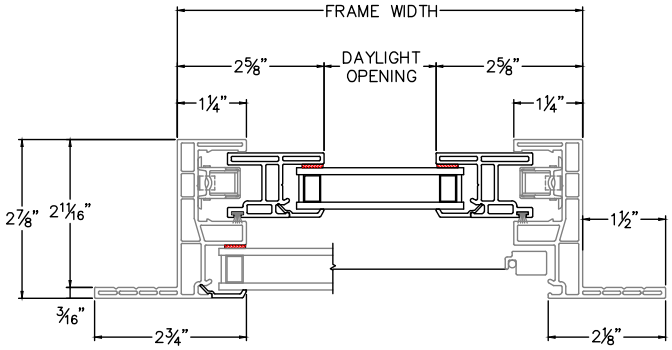

JAMBS

Revit, SketchUp, .PDF and .DWG files can be accessed at
milgard.com/professionals/technical-resources

Go back to Quick Links

© Milgard Manufacturing, Inc.

To Agenda

Single Hung Window

Double Single Hung - 1-3/8" Fin Setback

CAD File Scale	View	File Name	Units
NTS	Horizontal & Vertical	StyleLine 6210 DSH 1.375in	Inch

More Technical Documents can be found at **milgard.com/professionals**

Due to continual research and development, details may be changed at any time. ©2013 Milgard Mfg.

SINGLE HUNG
SERIES 6210

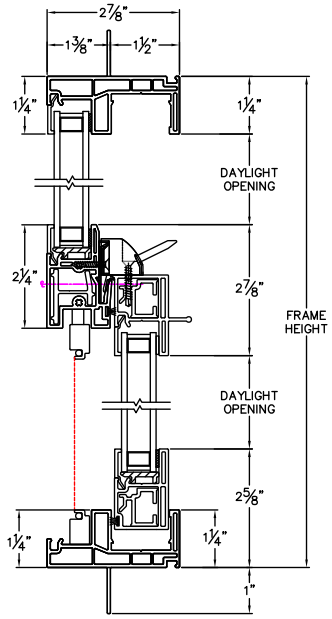

HEAD & SILL

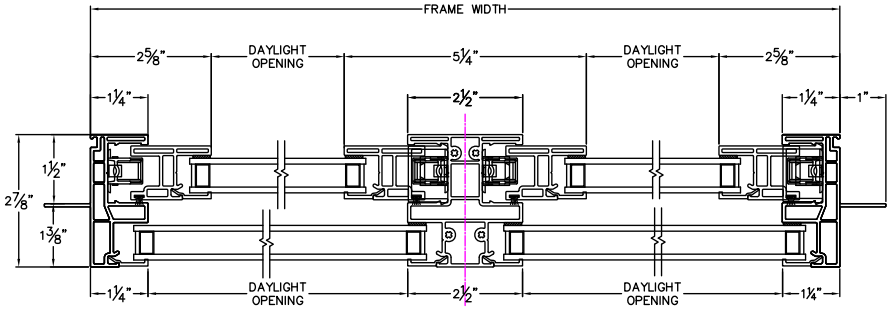

JAMBS

Revit, SketchUp, .PDF and .DWG files can be accessed at
milgard.com/professionals/technical-resources

Go back to Quick Links

© Milgard Manufacturing, Inc.

To Agenda

Single Hung Window

Double Single Hung above 2 Lites - 1-3/8" Fin Setback

CAD File Scale	View	File Name	Units
NTS	Horizontal & Vertical	StyleLine_6210_DSH_above_2_lites_1.375in	Inch

More Technical Documents can be found at **milgard.com/professionals**

Due to continual research and development, details may be changed at any time. ©2013 Milgard Mfg.

DOUBLE SINGLE HUNG ABOVE 2 LITES
SERIES 6210

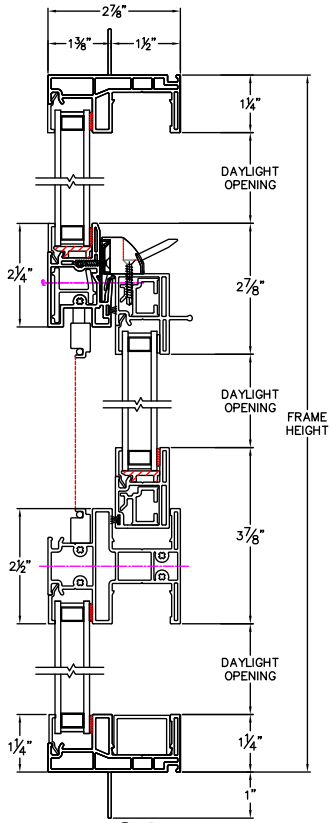

HEAD & SILL

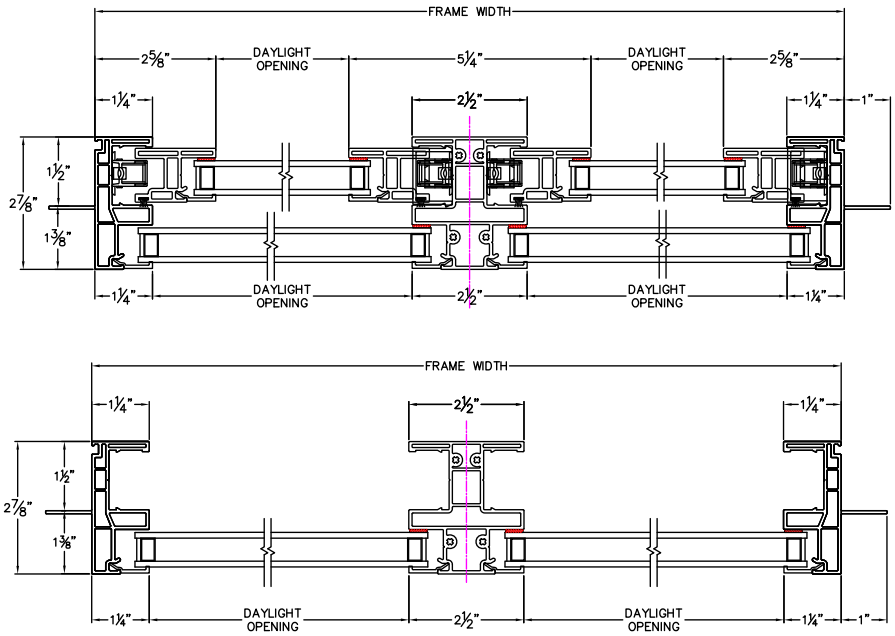

JAMBS

Revit, SketchUp, .PDF and .DWG files can be accessed at
milgard.com/professionals/technical-resources

Go back to Quick Links

© Milgard Manufacturing, Inc.

To Agenda

Single Hung Window

Double Single Hung below 2 Lites - 1-3/8" Fin Setback

CAD File Scale	View	File Name	Units
NTS	Horizontal & Vertical	StyleLine_6210_DSH_below_2-lites_1.375in	Inch

More Technical Documents can be found at **milgard.com/professionals**

Due to continual research and development, details may be changed at any time. ©2013 Milgard Mfg.

DOUBLE SINGLE HUNG BELOW 2 LITES
SERIES 6210

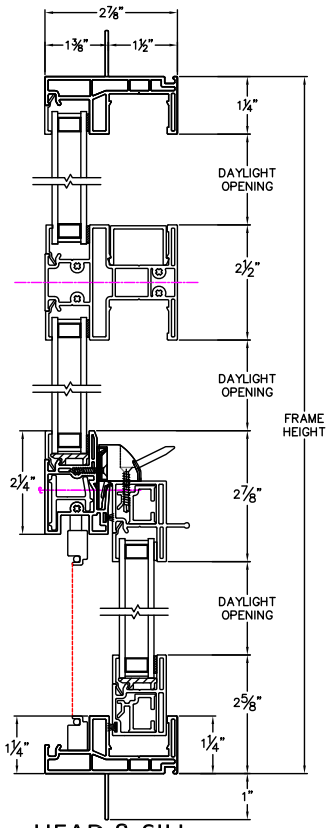

HEAD & SILL

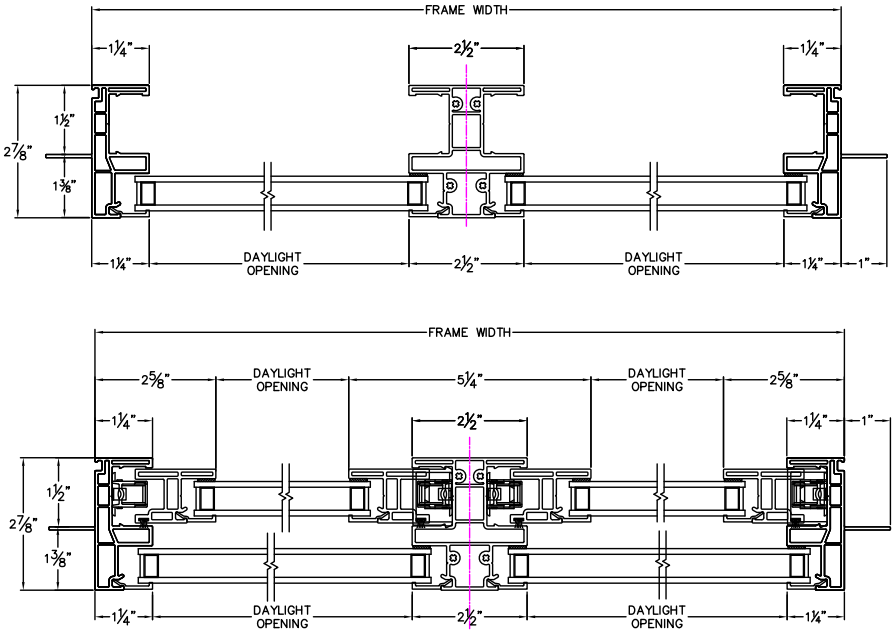

JAMBS

Revit, SketchUp, .PDF and .DWG files can be accessed at
milgard.com/professionals/technical-resources

Go back to Quick Links

© Milgard Manufacturing, Inc.

To Agenda

Single Hung Window

Single Hung above - Block Frame

CAD File Scale	View	File Name	Units
NTS	Horizontal & Vertical	6210 SHA	Inch

More Technical Documents can be found at **milgard.com/professionals**

Due to continual research and development, details may be changed at any time. ©2013 Milgard Mfg.

SINGLE HUNG ABOVE
SERIES 6210

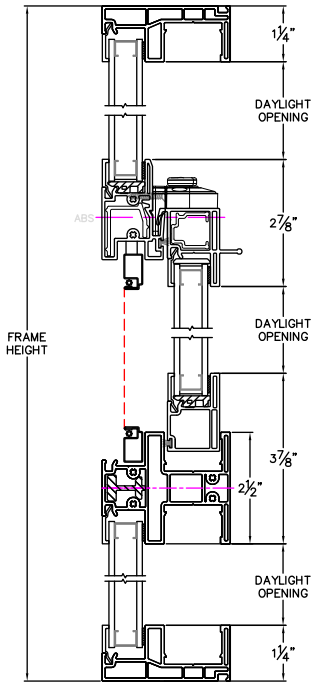

HEAD & SILL

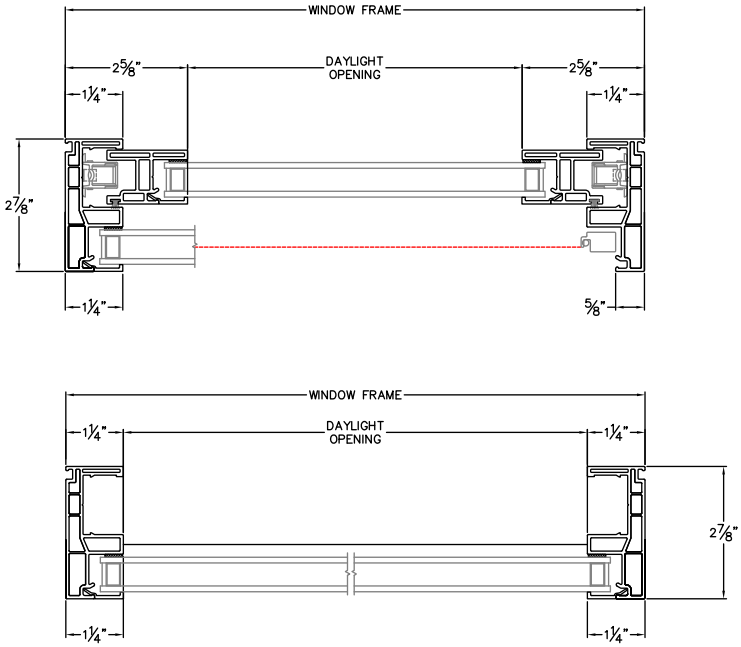

JAMBS

Revit, SketchUp, .PDF and .DWG files can be accessed at
milgard.com/professionals/technical-resources

Go back to Quick Links

© Milgard Manufacturing, Inc.

To Agenda

Single Hung Window

True Divide - Block Frame

CAD File Scale	View	File Name	Units
NTS	Horizontal & Vertical	StyleLine_6210_SHTT_block	Inch

More Technical Documents can be found at **milgard.com/professionals**

Due to continual research and development, details may be changed at any time. ©2013 Milgard Mfg.

SINGLE HUNG
SERIES 6210

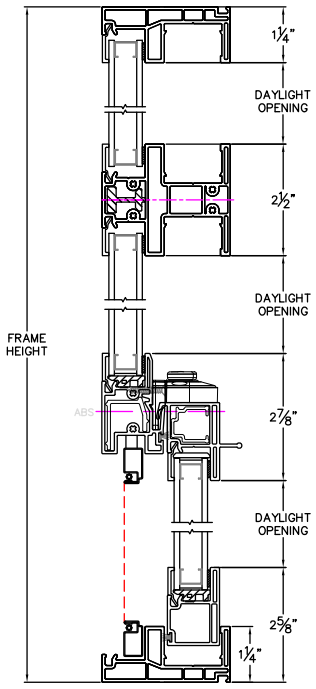

HEAD & SILL

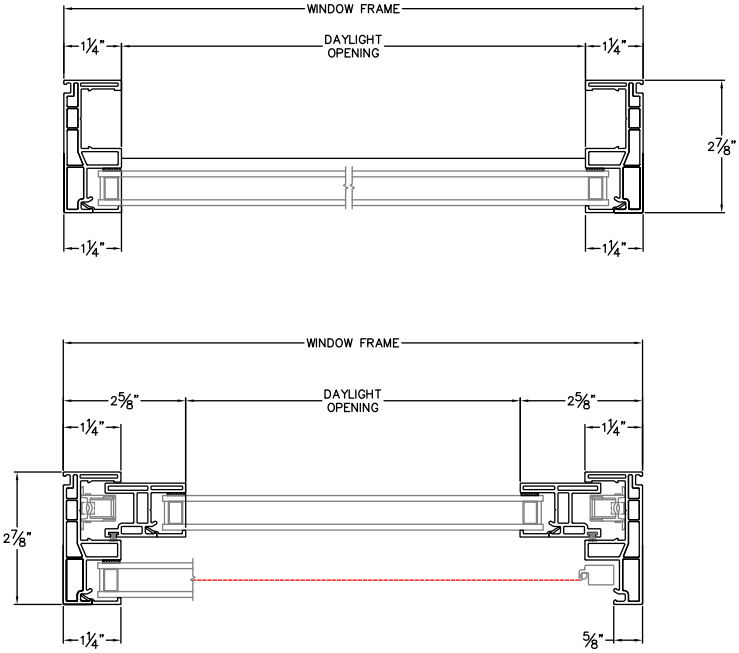

JAMBS

Revit, SketchUp, .PDF and .DWG files can be accessed at
milgard.com/professionals/technical-resources

Go back to Quick Links

© Milgard Manufacturing, Inc.

To Agenda

Single Hung Window

Triple Single Hung - Block Frame

CAD File Scale	View	File Name	Units
NTS	Horizontal & Vertical	StyleLine_6210_TSH_block	Inch

More Technical Documents can be found at **milgard.com/professionals**

Due to continual research and development, details may be changed at any time. ©2013 Milgard Mfg.

SINGLE HUNG
SERIES 6210

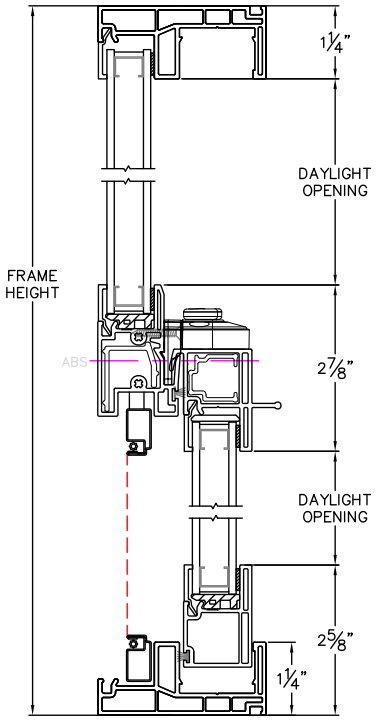

HEAD & SILL

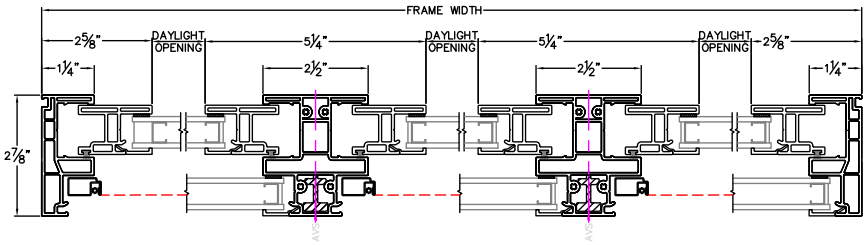

JAMBS

Revit, SketchUp, .PDF and .DWG files can be accessed at
milgard.com/professionals/technical-resources

Go back to Quick Links

© Milgard Manufacturing, Inc.

To Agenda

Single Hung Window

Single Single Hung - Z-bar frame

CAD File Scale	View	File Name	Units
NTS	Horizontal & Vertical	StyleLine_6270_SSH_z-bar	Inch

More Technical Documents can be found at **milgard.com/professionals**

Due to continual research and development, details may be changed at any time. ©2013 Milgard Mfg.

SINGLE HUNG
SERIES 6270

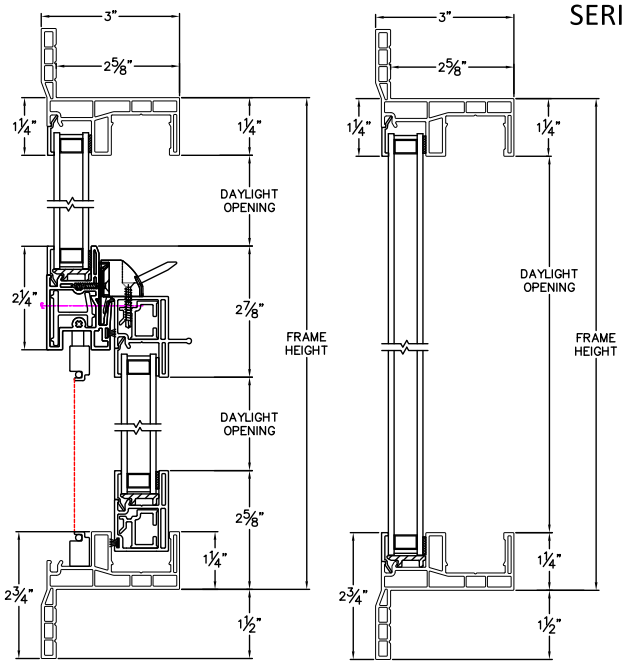

HEAD & SILL

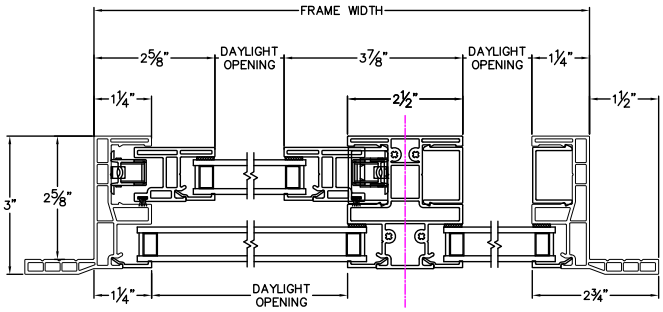

JAMBS

Revit, SketchUp, .PDF and .DWG files can be accessed at
milgard.com/professionals/technical-resources

Go back to Quick Links

© Milgard Manufacturing, Inc.

To Agenda

5.0 ARCHITECTURAL REVIEW OUTSIDE THE HISTORICAL DISTRICT

5.1 Existing Residential Neighborhoods

Outside the Historical District, in recognition of the diversity of architectural styles that developed in Nevada City and contribute to its character, the City zoning regulations also define as being important to Nevada City and require permits to protect those homes and neighborhoods that are known as being of the pre-World War II era, i.e. pre-1942. Architectural review permits are required for construction or renovation of all buildings and structures in existing neighborhoods – including new construction of or additions to residences or outbuildings; alteration of the exterior appearance; and any removal, demolition or razing and replacing of any part of any such building or structure – to make sure that such projects conform to the 'context of the neighborhood' and are generally compatible with the style of architecture therein respecting changes that over time may have acquired significance in their own right.

Distinctive stylistic features and examples of skilled craftsmanship of both Mother Lode and pre-WW II buildings and structures should be treated with sensitivity. Removal or alteration of historical material or distinctive features should be avoided wherever possible and distinguishing original qualities or character of the building, structure or site and environment should not be destroyed. Alterations to older homes should match the existing style, materials and details. Synthetic materials are discouraged. Like-for-like replacements and repairs are recommended.

New projects, additions to homes and renovations, as well as construction of new outbuildings, must be generally compatible with Nevada City's style of architecture. Such projects should conform to the "context of the neighborhood" previously discussed in these Guidelines

Nevada City Architecture or Mother Lode type of architecture is defined as "that type of architecture generally used in the Mother Lode region of the state of California during the period from 1849 and 1900. Such type of architecture involves the use of wood and brick as primary materials, and is generally characterized by such design features, among others, as gabled or shed roofs, tall and narrow windows and doors, dormer windows, iron or wooden shutters, balconies, wooden awnings and ornamental scroll work.

The determination of whether a building conforms with the Mother Lode type of architecture shall include all factors which affect the external appearance of the building, including, without limitation, architectural elevations, building materials, colors, finish, lighting, ornamental devices and signs.

Features typical of Mother Lode era architecture such as:

- Roof Pitches. Main roofs steeply peaked (6:12 to 12:12) with overhangs and gable ends.
  Hipped roofs in the appropriate architectural context are allowed. (Victorian homes were often very vertical in appearance and the relationship of the size of the house to the roof should be considered).

6:12 pitch

8:12 pitch

8:12 with gabled dormer

Roof Pitch and Height Limit

The Zoning Ordinance provides the height limit for the various zoning districts, with the residential zones having a height limit of 35 feet. The following heights are recommended:

Roof Pitch	Stories	Height Limit
12:12	1	28'
12:12	2	35'
6:12	1	20'
6:12	2	28'

Front, rear and side elevations should be similar in height and size to surrounding homes

- Siding for Existing Homes. Painted wood horizontal siding, board and batten. Cement fiber board, vinyl siding, and other synthetic siding (such as T-111 siding) is discouraged in older neighborhoods particularly when the neighborhood is in close proximity to pre-1942 homes or if the home itself is pre-1942 or exhibits a style which is not complemented by these types of siding.

- Materials, New Homes. Materials on new homes will be reviewed against the context of the neighborhood. If modern materials are used, they should match historic materials in appearance.

To Agenda

- Materials, Older Homes and Structures. Alterations to older homes and structures should match existing, historic materials. Synthetic materials with no historic basis are discouraged on both existing older home additions and renovations. Removal or alteration of any historic material or distinctive architectural features should be avoided when possible

- Covered porches and entries. Such entries and porches usually have shallower roof slopes.

Zion Street
4-plex

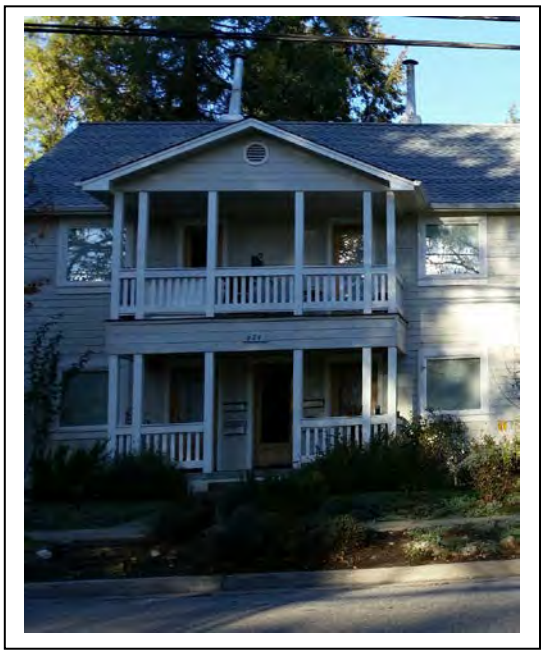

- Trim, railings, and details should have a historic basis and fit the style of the existing home or new structure.

- Roofing material. Asphalt shingles and metal roofing in muted non-glare colors such as tans, blacks, browns, and greens have historically been approved on new homes and additions. The use of corrugated metal has also been approved.

- Exterior Colors. There is no color review or approval required for change in colors of a home outside the Historical District. However, the following guidelines are recommended:
  - Select colors that are similar to the tones found in the area and on adjacent buildings
  - Muted, soft colors on large wall expanses are encouraged
  - The use of bright, modern colors and intense white color are discouraged.
  - Use subdued colors as the primary color and brighter, contrasting trim when appropriate
  - Incorporate the color from primary building materials, such as stone, brick and

hardwood, as the base colors for new development

Alexander St

- Windows. Typical windows include multi-pane, vertical, and bay windows. Wood windows and true divided lights are generally required of additions, renovations and newly constructed homes in older neighborhoods though existing window types may be duplicated.

Bay Window
Sacramento St

Discussion on Wood Windows

The Design Guidelines have, in the past, preferred the use of historically correct wood windows. The design of windows is continuously evolving as they become more efficient and maintenance free. Wood windows require maintenance throughout their life time, mainly painting. Because of these maintenance issues, the wood window is not as popular as the same window with "cladding" on the wood exposed to the weather. The cladding replaces the layers of paint on the wood window. The cladding can be several materials with aluminum and vinyl being the most popular. The cladding protects the wood and usually never needs painting. This is good for the homeowner and the environment.

There are two important points to be made. First, this discussion is not relative to a vinyl or aluminum window but is for discussion of a clad wood window. It is difficult to make a solid vinyl or aluminum window match the proportions of the true wood window. Secondly, referring to the two images below of an actual wood window and the same window with white colored cladding, it is easy to see that the proportions and dimensions as basically identical.

There also are windows made from fiberglass for strength and low maintenance. The Planning Commission will consider the fact that if the windows have the same proportions of a wood window, they can possibly be considered as meeting the City's requirements.

Wood Clad Window

Vinyl Clad Window

Below are photograph of homes that meet the definition of "Mother Lode Architecture" (Classic 19th Century)

Miner's Cabin on Cabin Street

Victorian on Prospect Street

Below are examples of pre-WW II homes 20th Century to 1942

North Pine Street, about 1935

Adams Street, about 1930

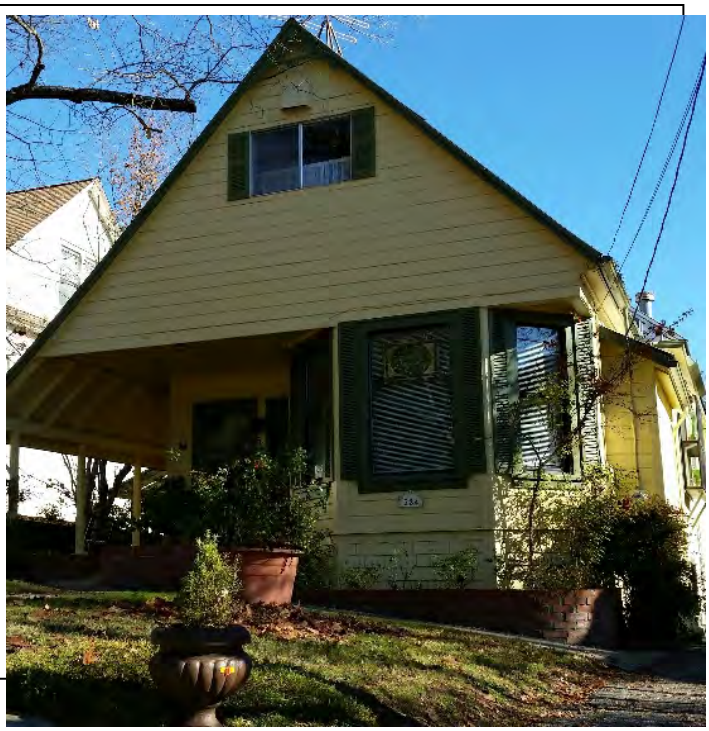

Coyote Street, about 1938

Below are examples of 1940's to 1970's homes

Brock Road, about 1948

Gold Tunnel Road, 1950's

Lindley Avenue, about 1960

Turpentine Drive, 1970 (part of Steger Tract Subdivision)

Below are a 'before and after' photograph of a renovation consistent with Mother Lode Architecture.

Before (2000)

After (2014)

This home on Sacramento Street, built in 1891, was granted approval to remodel the home by adding conditioned living space to the attic area of the home. The home contains 1,348 sq ft and the project added 1,082 sq ft of conditioned area. Interior work to the home was done and like-for-like windows were replaced. The new conditioned area became living space and the roof was raised by 4 feet. New dormers and windows were added to this area and materials matched those of the existing home and those in the immediate area. Railings and steps were replaced.

.

Winter Street, new home built in 1990 (replacing original due to fire)

Additions. Nevada City is concerned about retaining a mix of housing sizes for affordable housing and historic preservation. As a result, major additions should not overwhelm the original structure. The integrity of the original structure should be retained. Additions to homes that are greater than 25% of the floor area are considered by the Planning Commission. Additions less than 25% with materials matching the home can be approved by staff; however the City Planner always has the ability to send an application to the Planning Commission for approval.

436 Washington Street – 25% addition to west side of home by extending kitchen and adding bay window (2013)

Garages and Accessory Structures, Second Dwelling Units

Accessory building means a "detached subordinate building located on the same premises as the main building or buildings, the use of which is customarily incidental to that of the main building or to the use of the land. Said accessory building shall not be used as sleeping or housekeeping quarters." However, the City's second dwelling unit ordinance does encourage second dwelling units above new garages.

Accessory buildings such as guest houses, garages, barns, and workshops should be designed to fit the character of the neighborhood and with adherence to all of the appropriate guidelines in this section. Accessory structures should complement the main building's architecture (design, materials, color, etc.).

Existing accessory structures often contribute to the significance of the property and should be retained. Repair and restoration of such structures is desired rather than removal. If the structure is pre-WWII or of special historic or architectural value, it will not be permitted to be demolished without approval of a Demolition Permit which requires a finding by the Planning Commission that the building cannot be reasonably repaired or restored. (See Attach #11.2)

Accessory buildings can be detached from the main residence or attached (or may be connected by a breezeway). Accessory buildings need to comply with all requirements as the main residence including setbacks and undergo architectural review by the Planning Commission.

Exceptions to setbacks and design review are small accessory structures (such as tool sheds) that are less than 160 square feet in size; such structures are placed in the rear half of the lot and cannot exceed 30% of the rear yard area. Staff can assist with the placement of such structures to ensure compliance with the zoning ordinance.

Garage patterns in the existing neighborhood should be respected. For example, if rear detached garages are the norm, it is a good idea for any new garages to follow that form. Where single garage doors are common, new two car garages should use two similar doors instead of one larger double door. Regardless, the garage should not be the dominant feature of a front elevation.

Garage behind home – Clay Street

Garage, Alexander Street

Second Dwelling Units
The City adopted Ordinance 2008-14, finding that such dwelling units are an important form of housing that contributes to the character and diversity of housing opportunities in Nevada City. Such a unit is defined as an attached (640 square feet maximum) or detached unit (800 square feet) that is smaller and secondary to the main residence. Second dwelling units can also be constructed above a new garage (640 square feet maximum). A use permit can be submitted by the owner to the Planning Commission for any deviation in unit size.

Second dwelling units are permitted in all zoning districts that allow single family dwellings as a permitted use. The City encourages residential second dwelling units and has imported standards that enable homeowners to create such units to be compatible, as much as possible, with the neighborhood.

Second dwelling units are approved at staff level by the City Planner with submittal of an application, site plan and any required fees. Units are subject to standards such as:

1. Must meet building and fire codes
2. Payment of public water and sewer fees, along with AB1600 Mitigation Fees (can be waived with a 30-year deed restriction ensuring affordable rent at "low" or "very low" income levels as established by the State of California.
3. Each unit shall have one spate off street parking space (in addition to two spaces required for main residence).
4. One of the residences shall be occupied by the owner of the property.
5. Lot coverage of all buildings cannot exceed 50 percent.
6. Materials, colors and architecture shall be similar to the primary unit.
7. Lighting shall not spill onto neighboring lots.
8. Entrances shall be screened from neighboring properties.

:

American Hill Rd. - 2nd unit under construction

Chief Kelly Dr. - 2nd unit above garage

5.2 New Residential Neighborhoods

New homes in new subdivisions or previously undeveloped neighborhoods must exhibit high quality design which is compatible and sympathetic to Nevada City's Mother Lode architecture incorporating traditional materials, building lines, features, and landscaping wherever possible. For example:

Features typical of Mother Lode era architecture:

- Roofs may vary in their design and detailing which is more flexible than the review standard in older neighborhoods, but they should be steeply pitched (6:12 to 12:12).
- Wall material - Siding on new homes in new neighborhoods should be high quality and at least reminiscent of traditional materials. Painted siding, cement fiber siding, shingles, and traditionally surfaced stucco are examples or preferred materials though it must be reviewed for furthering the intent of achieving a continuation of Mother Lode architecture. T-111 type siding, vinyl, and other synthetic siding are strongly discouraged.
- Covered porches and entries should be used wherever possible to continue a Nevada City architectural tradition.
- Windows should match the style of the house. Multi-pane, vertical, and bay windows are encouraged with variations to fit the style of the house.
- Trim, railing, and details should fit the style of the new house. The intent should be to add texture, shadowing, contrast, and interest which are reminiscent of the City's older homes.
- Roofing material such as treated wood shingles, asphalt shingles, and metal roofing in muted non-glare colors such as tans, blacks, browns, greens and grays are desired.
- Colors. Colors are not reviewed outside the Historic District. However, the following guidelines are recommended:
    - Select colors that are similar to the tones found in the area and on adjacent buildings
    - Muted, soft colors on large wall expanses are encouraged
    - The use of bright, modern colors and intense white color are discouraged.
    - Use subdued colors as the primary color and brighter, contrasting trim when appropriate
    - Incorporate the color from primary building materials, such as stone, brick and hardwood, as the base colors for new development

Approved Elevations for varied housing styles within a subdivision off Gracie Road

Lost Hill Drive Residences (subdivision approved in 2000)

ada City Cottages, i- family project in 2005

Table of Contents Link

To Agenda

City of Nevada City

TO: Planning Commission

FROM: Amy Wolfson, City Planner

MEETING DATE: February 20, 2020

RE: Architectural Review Application for Exterior Alterations at 224 Church Street

ATTACHMENTS:

1) Application for Architectural Review
2) Improvement Plans (Site Plan, Floor Plan, Elevation Details)
3) Garage Door Spec Sheet
4) Lighting fixture details

ACTION REQUESTED:

1) Approve new garage door and light fixtures for 224 Church Street

SITE SPECIFICATIONS:

Lot Size:	0.31acres	**Lot Coverage:**	100%
Zoning:	GB-HD-SC: General Business-Historical District	**Building Height:**	40-feet
Setbacks:	None	**Historical District:**	Within

BACKGROUND: The owner of the building, John Conger and his design team originally presented an application for exterior alterations of the subject building at the August 15, 2019 Planning Commission meeting. At the September 19, 2019 meeting, the Planning Commission approved a Use Permit for specified office uses on the ground floor and also approved architectural review for a newly proposed garage with upper story deck, to be located in the rear of the existing building. The Commission further approved exterior alterations at their Meeting held on October 17, 2019 and the Special Meeting held on October 30, 2019.

Immediately following this approval, Conger's neighbor expressed concern that the corrugated metal cladding and faux windows would create gaps between the rock face and metal that would potentially invite rodent and pest problems. As a result, Conger requested that the Planning Commission consider a revised Architectural Review proposal at their November 21, 2019 meeting to reconsider the metal cladding and faux windows and allow the rock face to remain as is, and also allow the north elevation to remain as is, though painted in the proposed color scheme. The Planning Commission denied Conger's proposal from the November 21st meeting based on it being incompatible with Motherlode architecture. However, Conger appealed this decision at the January 8, City Council meeting, whereby Council overturned the Planning Commission decision with a 4 to 1 vote. Therefore the elevations as presented at the November 21st Planning Commission meeting and at the January 8th City Council Meeting represent the approved Architectural Review, attached.

The current structure was constructed in 1962 and is not considered a contributing building to the National Register Historic District. The National Register inventory describes it as follows:

CURRENT PROPOSAL: Conger is proposing to install a garage door on the front of the building, facing Church Street, with access from the existing parking lot. The garage door is a

full-view, aluminum door that incorporates window lites across the entire panel. Four parking spaces will need to be removed in order to accommodate the drive access. The loss of parking will limit the commercial use of the building, though presently Conger has decided to improve the space only for residential use of two units, for which adequate parking exists, and not lease out the office space. Staff has added a condition of approval, that any commercial use of the building, including office use, shall require evaluation by the Planning Department for consistency with commercial, off-street parking standards pursuant to 17.80.030 of the City Municipal Code.

Conger is also proposing to install gas lanterns at the entry and gas tiki-style lamps on the roof deck adjacent to the upper residence. The Fire Chief has advised that the California Fire Code regulates open-flame decorative devices under section 308.3.1. Adherence to that code is required and has been included in the recommended Conditions of Approval below.

In addition to the exterior improvements, Conger is proposing a new barrier gate at the entrance of the parking lot off Church Street. However, this feature is not under the purview of the Planning Commission since it does not involve an alteration of the building itself. It will need to be reviewed by City staff, including the Fire, Police, and Engineering Departments in order to make sure it is installed consistently with safety standards.

REGULATORY CONSIDERATIONS:

Historical District: Pursuant to Section 17.68.070 of the City Municipal Code, Stylistic conformance of alteration or new construction, all buildings which may hereafter be constructed or altered as to their exterior appearance within the historical district shall substantially conform with the Mother Lode type of architecture with respect to their exterior appearance within public view.

Scenic Corridor: The subject property is designated with a scenic corridor (SC) combining district. This designation is applied to land areas which are adjacent to roads and highways which are indicated on the General Plan with the symbol for scenic corridors, and as may be designated by the city council from time to time. These roadways are generally entryways to Nevada City which were recognized in the General Plan as being particularly important to protect the existing essential character of Nevada City, namely that of a small, compact historical town surrounded by green, wooded hills, by hiding development from view from the highways and preserving the existing tree cover to the greatest extent possible, and assuring visually pleasing corridors. The planning commission may require the incorporation of special conditions of approval or design features, prior to approval.

Environmental Review: Staff has determined that the project is exempt from environmental review pursuant to §15301 of the California Environmental Quality Act (CEQA) guidelines. The CEQA Guidelines for Categorical Exemption §15301, Existing Facilities "consists of operation, repair maintenance of existing public or private structures or facilities…involving no or negligible expansion of use beyond that existing at the time of the lead agency's determination."

RECOMMENDED MOTION:

A. The Planning Commission, acting as the Architectural Review Committee, approves the Architectural Review application, as conditioned, for the proposed exterior alterations located at 224 Church Street, Nevada City, CA, making findings a through d:

    a. That the garage door and lighting fixtures are generally compatible with Mother Lode style Architecture and with the Historical District

b. That the garage door and lighting fixtures are compatible with the context of the surrounding neighborhood.

c. That the garage door and lighting fixtures, as conditioned, are consistent with the General Plan in preserving the Nevada City essential character and scenic corridor designation;

d. That the garage door and lighting fixtures, as conditioned, contains sufficient design and/or landscaping features to protect and enhance the aesthetics of the scenic corridor.

RECOMMENDED CONIDTIONS OF APPROVAL:

1. Nevada City contracts with the Nevada County Building Department for issuance of permits. The County will not issue permits unless the plans have been stamped and approved by Nevada City. Therefore, prior to issuance of a building permit, submit one digital copy of plans OR three sets of plans to Nevada City Planning Department, along with a filing fee of $100 (made payable to the City of Nevada City). The plans will be reviewed by the City Planner and City Engineer for consistency with the approval and will require their signatures.

2. Material selections, colors, and all proposed work shall substantially comply with the exhibits presented and approved by the Planning Commission.

3. Any future use beyond the two residential units shall be evaluated by the City Planner to determine the adequacy of off-street parking to serve those uses. Anyone pursuing a business license at 224 Church street shall provide the City Planner a diagram of the business space with square footage specified and information about the nature of the business and demonstrate compliance with off-street parking requirements pursuant to 17.80.030 of the City Municipal Code

4. All State, Local, and Federal permits required for the project shall be the responsibility of the property owner including, but not limited to the following agencies, Northern Sierra Air Quality District (potentially for the fireplace), Nevada County Building Department, the Nevada City Engineer, and the Nevada City Fire Department.

5. Open-flame decorative devices shall comply with the restrictions outlined in Section 308.3.1 of the California Fire Code.

6. The decision of the planning commission may be appealed to the city council not later than fifteen (15) days after this final action or decision. Any work during this period is at the applicant's own risk.

OFFICE USE ONLY
Filing Fees
Chk ☐ Cash ☐
Bus. Lic.

CITY OF NEVADA CITY

317 Broad Street • Nevada City, California 95959 • (530) 265-2496

APPLICATION FOR ARCHITECTURAL REVIEW

Applicant/Property Owner

John Conger
Name

224 Church St.
Address

Nevada City, CA
City, State

530-277-5061
Phone

jconger56@gmail.com
email address

Check all that apply:

☐ A New Building
☑ Changes to Existing
☐ In the Historic District
☐ Other (Describe)

Number of existing units 1
Year of original construction 1962

Supporting data must be attached:

- *Color chips*
- *Material specs, i.e. roofing, windows, etc.*
- *Elevations/Site plans*

Address and Assessor's parcel number of property where construction is proposed (also complete attached location key map):

224 Church St.
Street Address

005-390-004
Assessor's Parcel Number

Nearest cross street Main St.

New floor area proposed 300 S.F.

Briefly describe proposed project:

Remodel of existing commercial building. Convert portion of building into two residential units, one at 1351 sq.ft., the other at 1217 sq.ft. Add windows for both residential units. Convert portion of upper level office space into residential garage. Add new 300 sf garage at lower level. Install barrier arm gates at both driveway entrances.

Number of dwelling units on property 2

COMPLETE FOR ALTERATIONS TO EXISTING BUILDINGS:

Construction will involve (check all that apply):

- ☐ Foundation replacement
- ☐ Siding replacement - ☐ All siding or ☐ Repairs over _____%
- ☐ Roof replacement
- ☒ Use of metal framed windows
- ☒ Removal of old materials. Describe: Remove portions of concrete walls for new windows.

DESCRIPTION OF NEW CONSTRUCTION OR ALTERATIONS: Attach architectural elevations or perspective drawing showing all materials, colors, finish, lighting, ornamental devices, and any signs. The Commission prefers color chips.

SUPPORTING DOCUMENTS: Read and complete the attached pages and include any other statements or attach supporting information to substantiate that the architecture is consistent with the Mother Lode Era, or is otherwise consistent with the surroundings. Attach **TEN FOLDED COPIES** of the elevations and/or supporting information, including a site plan showing the existing and proposed building setbacks from all property lines. **ALL BUILDING DIMENSIONS, INCLUDING BUILDING HEIGHTS, MUST BE SHOWN ON THE ELEVATIONS.**

I am the owner or authorized agent for the subject property. If agent, submit letter from property owner.

Chris Andrews
Signature

Digitally signed by Chris Andrews
DN: C=US, E=chris@andrews-enterprises.com, O=L="Andrews Enterprises, LLC", CN=Chris Andrews
Date: 2020.01.06 10:37:24-08'00'

1/6/2020
Date

----------*FOR OFFICE USE ONLY*----------

Approved by:

Signature _____ Date _____

Signature _____ Date _____

To Agenda

PLEASE ATTEND THE PLANNING COMMISSION MEETING TO DISCUSS YOUR REQUEST, OR YOUR APPLICATION WILL BE CONTINUED TO THE NEXT MEETING

CITY OF NEVADA CITY
ARCHITECTURAL REVIEW GUIDELINES
AND SUPPORTING INFORMATION

Please read this document and provide the information that applies to your application. The City also maintains some reference material regarding historical architecture. Ask the City Planner for details.

POLICY DECLARATION:

The City's goal in requiring architectural review is to implement the goals of the City's General Plan by preserving the character of Nevada City architecture in terms of historical value, sit coverage and planning, volume and massing, materials, color, general design and details. Historical District work must be in strict compliance with the Mother Lode Era. Preservation of historic materials is encouraged.

The Planning Commission will review each application on its own merit and in the context of the neighborhood of the project. For example, plywood siding might be acceptable in an area of modern, similar homes, but not in a neighborhood of old Victorian homes.

Generally, Nevada City architecture is characterized by many of these design features typical of the Mother Lode Era: Steep peak roofs with pitches between 6:12 & 12:12, overhanging roofs with gable ends, covered porches and entries; multi-pane, vertical, and by windows, and use of horizontal painted rustic siding. Alterations to older homes should match existing historic materials. Vinyl siding has been declared potentially hazardous by the City's Fire Department.

SITE PLAN AND ENVIRONMENTAL CONSIDERATIONS:

Provide a site plan of the property to scale, showing any proposed tree removal, setbacks, building coverage, fencing and landscaping concepts. Attach a tree removal application form if there will be any trees removed. Show off-street parking areas.

Is the coverage and setback of the new construction compatible with surrounding houses? ☑ Yes ☐ No

Please explain how it is compatible

Project is in GB Zone. Parcel does not abut any residential parcels, so no setbacks are required.

VOLUME AND MASSING

Lot Size 13,503 SF

Will the proposed building or changes	Yes	No
Have a larger floor plan than surrounding buildings?	☐	☑
Be taller than surrounding buildings?	☐	☑
Block views or sunshine from existing buildings?	☐	☑
Does the site plan provide a private yard area?	☐	☑

Discussion, if needed:

To Agenda

MATERIALS

Generally, the City prefers horizontal wood siding, treated wood shingles, composition shingles, or metal roofing, true used brick, new brick, or mine rock veneers and accents, wood windows in older neighborhoods, and roof pitches in excess of 6:12.

Please list all materials that you will use and alterations proposed:

Roof: n/a Pitch: _____

Siding: n/a

Windows: Aluminum

Trim: Concrete

Foundation/Pony walls: n/a

Decks, porches, railings: Concrete roof deck, metal railing

COLORS (Please provide ten color chips per color)

	Color brand, name, number
Roof: n/a	
Trim: match existing	
Accents: n/a	
Railings/Decks: no paint, exposed steel	

DETAILS

Please provide sufficient information to allow review of the building's details, including:

- Foundation, rock work or veneer accents
- Vents and flues
- Door and window materials, trim and design detail
- Porch and deck framing and railing details
- Garage door

OTHER APPLICABLE INFORMATION

Use the space below to provide any additional information for the Planning Commission.

To Agenda

BUILDING COVERAGE CALCULATION	
STRUCTURE	SQUARE FOOTAGE
(E) BUILDING	4140 S.F.
NEW GARAGE	300 S.F.
TOTAL	4440 S.F.
	PROPERTY = 0.31 AC = 13,503 S.F.
	COVERAGE = 32.9%

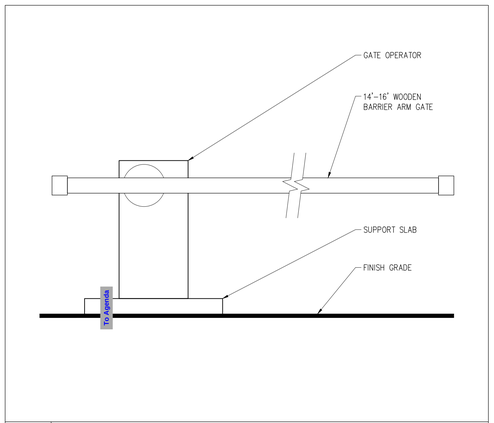

4 AUTOMATIC VEHICLE ARM GATE
SCALE: 3/4"=1'-0"

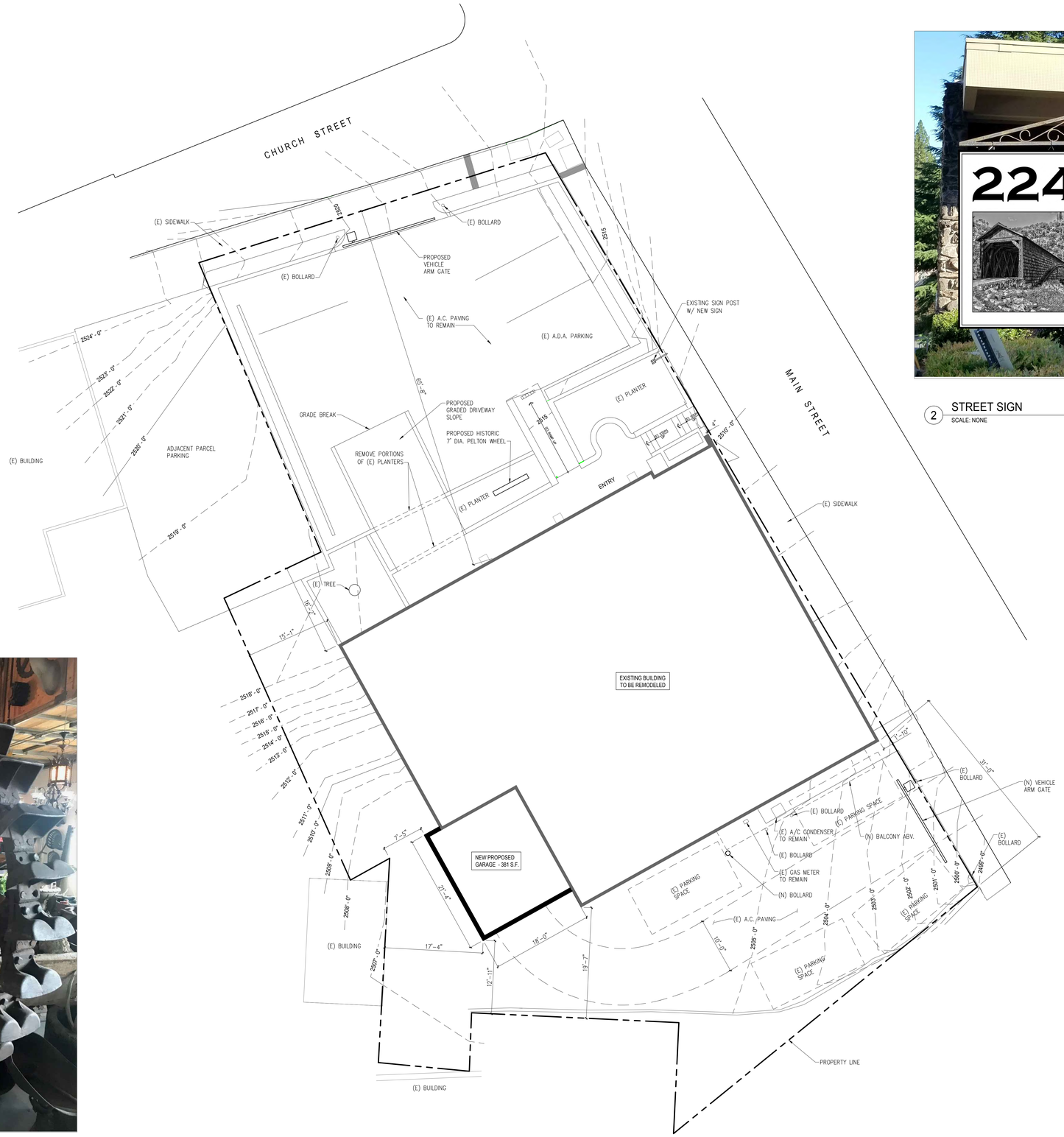

1 SITE PLAN
SCALE: 1/8" = 1'-0"

2 STREET SIGN
SCALE: NONE

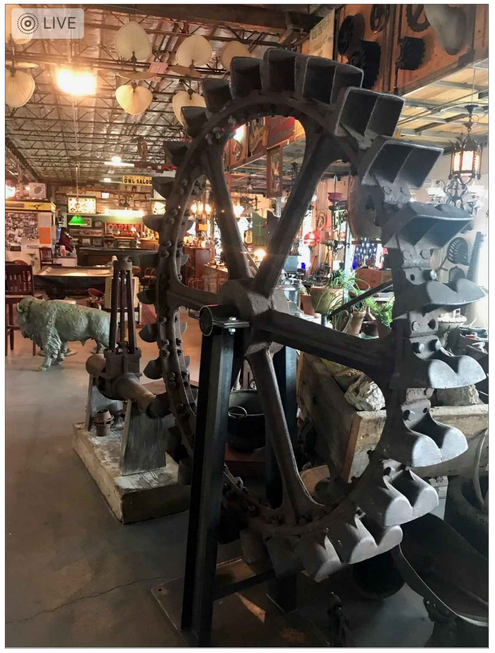

3 PELTON WHEEL
SCALE: NONE

CALIFORNIA BUILDING PLANS
120 JOERSCHKE DRIVE, #5
GRASS VALLEY, CALIFORNIA 95945
(530) 913-3162 | www.cabuildingplans.com

DWG. STATUS/REVISIONS
1/6/2020
PLANNING SUBMITTAL

PROJECT:
224 CHURCH ST.
TENANT IMPROVEMENT

APN: 005-390-004

OWNER:
JOHN CONGER
224 CHURCH STREET
NEVADA CITY, CALIFORNIA 95959

DRAWN:	W.J.R.
CHECKED:	C.W.A.
DATE:	1/6/2020
SCALE:	AS NOTED
JOB NO.:	19035

SITE PLAN

A1.1

CALIFORNIA BUILDING PLANS
120 JOERSCHKE DRIVE, #5
GRASS VALLEY, CALIFORNIA 95945
(530) 913-3162 | www.cabuildingplans.com

To Agenda

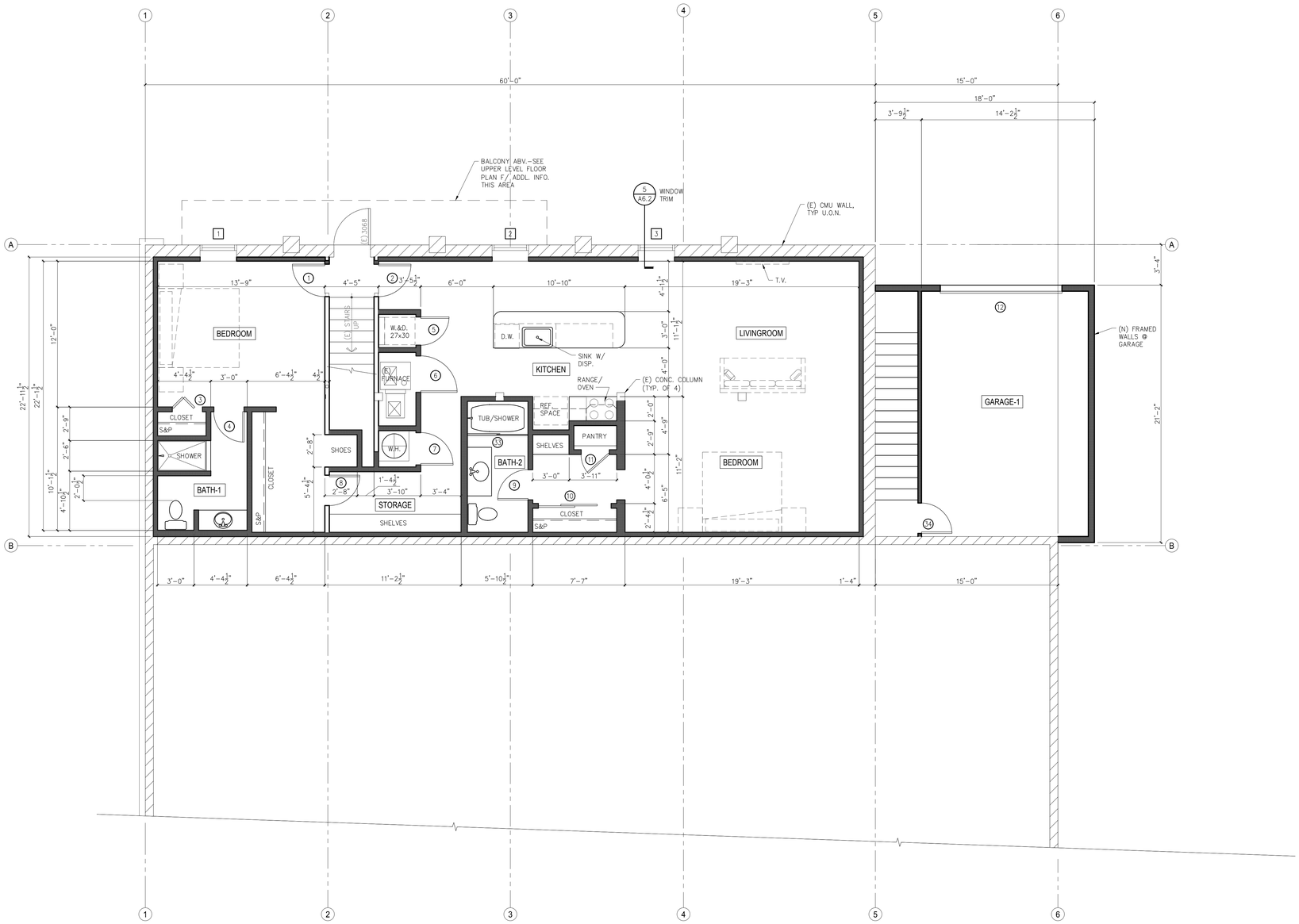

1 LOWER LEVEL FLOOR PLAN
SCALE: 1/4" = 1'-0"

PROJECT NORTH

WALL LEGEND	
	EXISTING 2x4 WALL
	NEW 2x4 WALL
	EXISTING 8" C.M.U. WALL
	NEW 8" C.M.U. WALL

DWG. STATUS/REVISIONS	
△	1/6/2020 PLANNING SUBMITTAL

PROJECT:

224 CHURCH ST.
TENANT IMPROVEMENT

APN: 005-390-004

OWNER:

JOHN CONGER
224 CHURCH STREET
NEVADA CITY, CALIFORNIA 95959

DRAWN:	W.J.R.
CHECKED:	C.W.A.
DATE:	1/6/2020
SCALE:	AS NOTED
JOB NO.:	19035

LOWER LEVEL FLOOR PLAN

A3.1

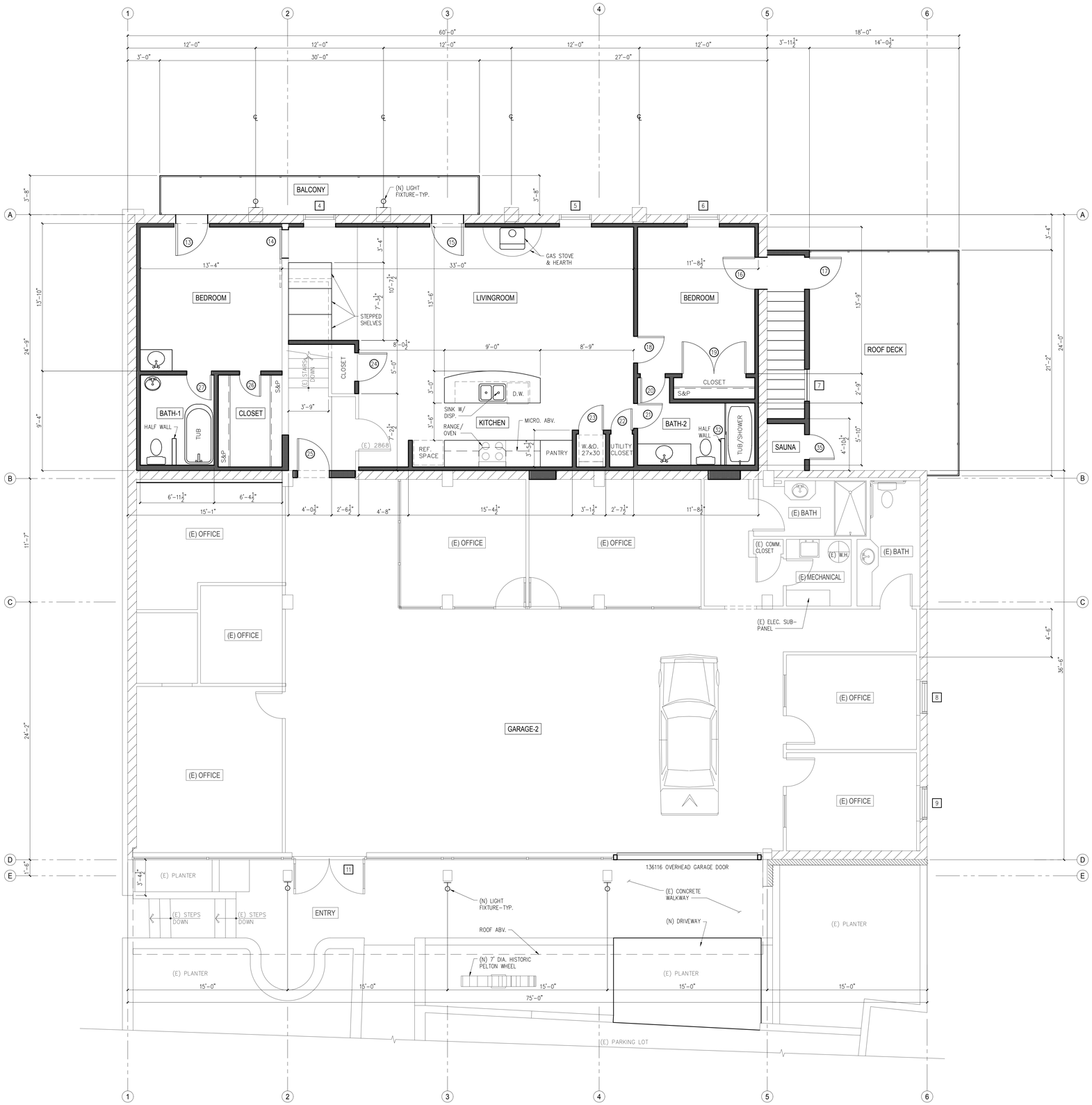

1 UPPER LEVEL FLOOR PLAN

SCALE: 1/4" = 1'-0"

WALL LEGEND	
	EXISTING 2x4 WALL
	NEW 2x4 WALL
	EXISTING 8" C.M.U. WALL
	NEW 8" C.M.U. WALL

CALIFORNIA BUILDING PLANS
120 JOERSCHKE DRIVE, #5
GRASS VALLEY, CALIFORNIA 95945
(530) 913-3162 | www.cabuildingplans.com

DWG. STATUS/REVISIONS

1/6/2020
PLANNING SUBMITTAL

PROJECT:

224 CHURCH ST.
TENANT IMPROVEMENT

APN: 005-390-004

OWNER:

JOHN CONGER
224 CHURCH STREET
NEVADA CITY, CALIFORNIA 95959

DRAWN:	W.J.R.
CHECKED:	C.W.A.
DATE:	1/6/2020
SCALE:	AS NOTED
JOB NO.:	19035

UPPER LEVEL FLOOR PLAN

A3.2

WINDOW SCHEDULE

MARK	SIZE	TYPE	FRAME MATERIAL	MAX U-FACTOR	MAX SHGC	SAFETY GLAZING	NOTES
1	3'-0" x 6'-0"	CASEMENT	–	–	–	–	SEE EXTERIOR ELEVATIONS
2	3'-0" x 6'-0"	CASEMENT	–	–	–	–	SEE EXTERIOR ELEVATIONS
3	3'-0" x 6'-0"	CASEMENT	–	–	–	–	SEE EXTERIOR ELEVATIONS
4	3'-4" x 8'-4"	CASEMENT	–	–	–	–	SEE EXTERIOR ELEVATIONS
5	3'-4" x 8'-4"	CASEMENT	–	–	–	–	SEE EXTERIOR ELEVATIONS
6	3'-4" x 8'-4"	CASEMENT	–	–	–	–	SEE EXTERIOR ELEVATIONS
7	3'-0" x 4'-0"	SINGLE HUNG	–	–	–	–	SEE EXTERIOR ELEVATIONS
8	3'-4" x 6'-4"	CASEMENT	–	–	–	–	SEE EXTERIOR ELEVATIONS
9	3'-4" x 6'-4"	CASEMENT	–	–	–	–	SEE EXTERIOR ELEVATIONS
10	3'-4" x 7'-0"	STOREFRONT	–	–	–	FULLY TEMPERED	SEE EXTERIOR ELEVATIONS
11	2'-6" x 6'-0"	STOREFRONT	–	–	–	FULLY TEMPERED	SEE EXTERIOR ELEVATIONS

NOTES:

1. IF WINDOW SILL IS LESS THAN 24 INCHES FROM THE FINISH FLOOR AND MORE THAN 72 INCHES ABOVE EXTERIOR FINISH GRADE. PROVIDE WINDOW OPENING CONTROL DEVICE. (R312.2.1)
2. EGRESS WINDOW. OPENING AREA OF WINDOW MUST BE 5.7 SQUARE FEET (5 SQUARE FEET AT GRADE FLOOR OR BELOW GRADE OPENINGS), HAVE 24 INCHES CLEAR OPENING HEIGHT, AND 20 INCHES CLEAR OPENING WIDTH. SILL OF CLEAR OPENING SHALL BE AT 44 INCHES MAX ABOVE FINISH FLOOR.
3. EXISTING WINDOW

DOOR SCHEDULE

MARK	INT./EXT.	SIZE	TYPE	MATERIAL	CORE	RATING	MAX U-FACTOR	SHGC	SAFETY GLAZING	REMARKS
1	INTERIOR	2'-8"x 6'-8"	SIDE HINGE	–	–	–	–	–	–	–
2	INTERIOR	2'-8"x 6'-8"	SIDE HINGE	–	–	–	–	–	–	–
3	INTERIOR	2'-6"x 6'-8"	BI-FOLD	–	–	–	–	–	–	–
4	INTERIOR	2'-6"x 6'-8"	SIDE HINGE	–	–	–	–	–	–	–
5	INTERIOR	2'-4"x 6'-8"	SIDE HINGE	–	–	–	–	–	–	–
6	INTERIOR	3'-0"x 6'-8"	SIDE HINGE	–	–	–	–	–	–	–
7	INTERIOR	2'-8"x 6'-8"	SIDE HINGE	–	–	–	–	–	–	–
8	INTERIOR	2'-8"x 6'-8"	SIDE HINGE	–	–	–	–	–	–	–
9	INTERIOR	2'-6"x 6'-8"	SIDE HINGE	–	–	–	–	–	–	–
10	INTERIOR	PR. 3'-0"x 6'-8"	BI-PASS	–	–	–	–	–	–	–
11	INTERIOR	2'-4"x 6'-8"	SIDE HINGE	–	–	–	–	–	–	–
12	EXTERIOR	10'-0"x 7'-0"	OVER HEAD GARAGE DOOR	METAL	–	–	–	–	–	–
13	EXTERIOR	3'-0"x 8'-0"	SIDE HINGE	GLASS	–	–	–	–	FULLY TEMPERED	–
14	INTERIOR	2'-8"x 6'-8"	BARN-TYPE DOOR	–	–	–	–	–	–	–
15	EXTERIOR	3'-0"x 8'-0"	SIDE HINGE	GLASS	–	–	–	–	FULLY TEMPERED	–
16	INTERIOR	3'-0"x 6'-8"	SIDE HINGE	–	–	–	–	–	–	–
17	EXTERIOR	3'-0"x 6'-8"	SIDE HINGE	GLASS	–	–	–	–	FULLY TEMPERED	–
18	INTERIOR	2'-6"x 6'-8"	SIDE HINGE	–	–	–	–	–	–	–
19	INTERIOR	PR. 3'-0"x 6'-8"	SIDE HINGE	–	–	–	–	–	–	–
20	INTERIOR	2'-4"x 6'-8"	SIDE HINGE	–	–	–	–	–	–	–
21	INTERIOR	2'-4"x 6'-8"	SIDE HINGE	–	–	–	–	–	–	–
22	INTERIOR	2'-0"x 6'-8"	SIDE HINGE	–	–	–	–	–	–	–
23	INTERIOR	2'-4"x 6'-8"	SIDE HINGE	–	–	–	–	–	–	–
24	INTERIOR	2'-8"x 6'-8"	SIDE HINGE	–	–	–	–	–	–	–
25	INTERIOR	3'-0"x 7'-0"	SIDE HINGE	–	–	–	–	–	–	–
26	INTERIOR	2'-0"x 6'-8"	SIDE HINGE	–	–	–	–	–	–	–
27	INTERIOR	2'-4"x 6'-8"	SIDE HINGE	–	–	–	–	–	–	–
28	INTERIOR	2'-8"x 6'-8"	SIDE HINGE	–	–	–	–	–	–	–
29	INTERIOR	2'-8"x 6'-8"	SIDE HINGE	–	–	–	–	–	–	–
30	INTERIOR	9'-0"W.x 8'-0"H.	ROLL-UP	METAL	–	–	–	–	–	SECURITY DOOR
31	EXTERIOR	3'-0"x 8'-0"	SIDE HINGE	GLASS	–	–	–	–	FULLY TEMPERED	–
32	INTERIOR	5'-10"x 6'-0"	BI-PASS	GLASS	–	–	–	–	FULLY TEMPERED	SHOWER ENCLOSURE
33	INTERIOR	5'-0"x 6'-0"	BI-PASS	GLASS	–	–	–	–	FULLY TEMPERED	SHOWER ENCLOSURE
34	INTERIOR	2'-6"x 6'-8"	SIDE HINGE	–	–	20 MIN.	–	–	FULLY TEMPERED	1, 2, 4
35	INTERIOR	2'-4"x 6'-8"	SIDE HINGE	–	–	–	–	–	–	–
36	INTERIOR	3'-0"x 6'-8"	SIDE HINGE	–	–	–	–	–	–	–

REMARKS:

1. PROVIDE WEATHER STRIPPING.
2. MUST HAVE SELF-CLOSING HARDWARE.
3. WINDOW SILL IS LESS THAN 24 INCHES FROM THE FINISH FLOOR AND MORE THAN 72 INCHES ABOVE EXTERIOR FINISH GRADE. PROVIDE WINDOW OPENING CONTROL DEVICE. (R312.2.1)
4. MUST BE NON-COMBUSTIBLE, IGNITION-RESISTANT, MINIMUM 1 3/8" THICK, SOLID CORE OR HAVE A MINIMUM 20 MINUTE FIRE RESISTIVE RATING.

NOTES:

1. CONTRACTOR TO VERIFY ROUGH OPENING SIZES PRIOR TO ORDERING WINDOWS.

CALIFORNIA BUILDING PLANS

120 JOERSCHKE DRIVE, #5
GRASS VALLEY, CALIFORNIA 95945
(530) 913-3162 | www.cabuildingplans.com

DWG. STATUS/REVISIONS

△ 1/6/2020
PLANNING SUBMITTAL

PROJECT:

224 CHURCH ST.
TENANT IMPROVEMENT

APN: 005-390-004

OWNER:

JOHN CONGER

224 CHURCH STREET
NEVADA CITY, CALIFORNIA 95959

DRAWN:	W.J.R.
CHECKED:	C.W.A.
DATE:	1/6/2020
SCALE:	AS NOTED
JOB NO.:	19035

DOOR & WINDOW SCHEDULE / EQUIPMENT SCHEDULE

A3.3

CALIFORNIA BUILDING PLANS
120 JOERSCHKE DRIVE, #5
GRASS VALLEY, CALIFORNIA 95945
(530) 913-3162 | www.cabuildingplans.com

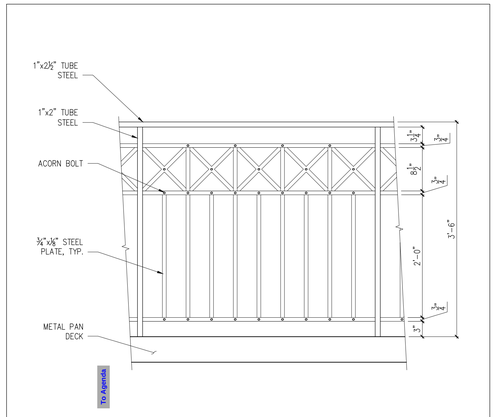

4 BALCONY RAILING
SCALE: 1"=1'-0"

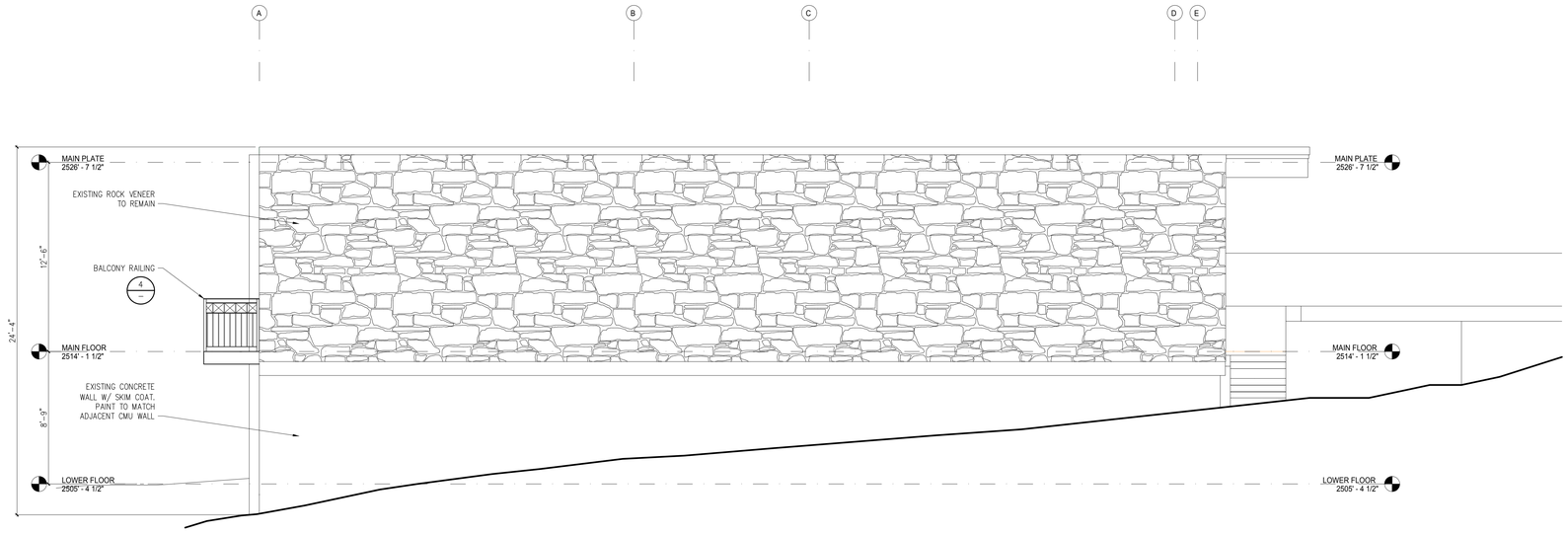

2 EAST ELEVATION
SCALE: 1/4" = 1'-0"

MATERIALS LIST

NOTE: THE FOLLOWING IS A SUMMARY OF THE PROPOSED EXTERIOR MATERIALS. HATCHES SHOWN MAY NOT BE TO SCALE. ALL EXTERIOR MATERIALS TO BE VERIFIED BY OWNER.

ENTRY FASCIA: EXISTING, TO REMAIN

STOREFRONT WINDOWS: EXISTING, TO REMAIN

WINDOWS: ANDERSON E-SERIES, DARK BRONZE METAL CLAD WOOD WITH SIMULATED DIVIDED LITES PER ELEVATIONS (7/8" WIDE MULLIONS, MIN.)

CMU BLOCK: BASALITE SHOT BLAST COLOR 790 OR 791. PAINT TO MATCH EXISTING

STONE VENEER: EXISTING, TO REMAIN

GARAGE DOOR: NICKSBUILDING.COM HERITAGE KNOTTY CEDAR, NO LITES COLOR - NATURAL WITH VAN DYKE BROWN GLAZE, LIGHT DISTRESSED

3 LIGHT FIXTURE
SCALE: 1/4" = 1'-0"

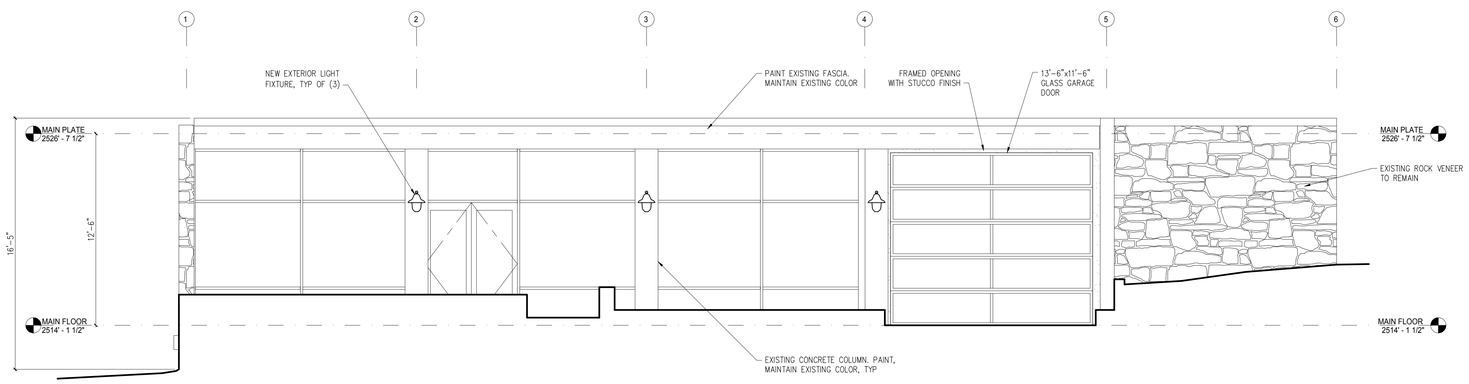

1 NORTH ELEVATION
SCALE: 1/4" = 1'-0"

DWG. STATUS/REVISIONS

△ 1/6/2020 PLANNING SUBMITTAL

PROJECT:

224 CHURCH ST. TENANT IMPROVEMENT

APN: 005-390-004

OWNER:

JOHN CONGER
224 CHURCH STREET
NEVADA CITY, CALIFORNIA 95959

DRAWN:	W.J.R.
CHECKED:	C.W.A.
DATE:	1/6/2020
SCALE:	AS NOTED
JOB NO.:	19035

EXTERIOR ELEVATIONS

A6.1

CALIFORNIA BUILDING PLANS
120 JOERSCHKE DRIVE, #5
GRASS VALLEY, CALIFORNIA 95945
(530) 913-3162 | www.cabuildingplans.com

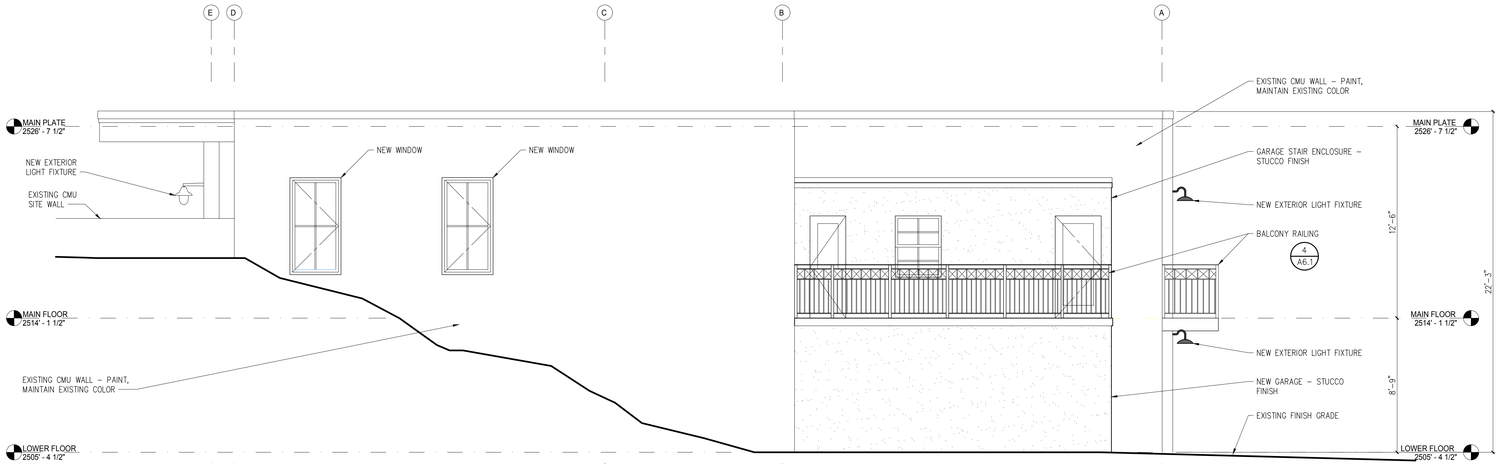

4 WEST ELEVATION
SCALE: 1/4" = 1'-0"

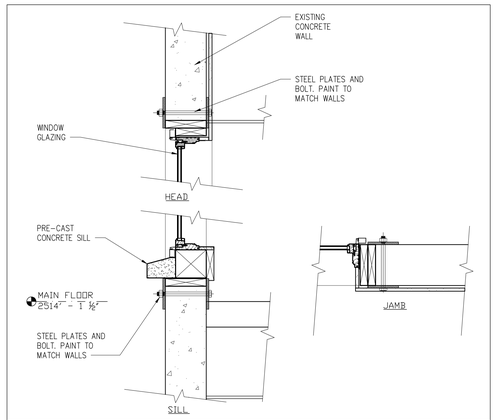

5 WINDOW INSTALLATION
SCALE: 1"=1'-0"

MATERIALS LIST

NOTE: THE FOLLOWING IS A SUMMARY OF THE PROPOSED EXTERIOR MATERIALS. HATCHES SHOWN MAY NOT BE TO SCALE. ALL EXTERIOR MATERIALS TO BE VERIFIED BY OWNER.

ENTRY FASCIA: EXISTING, TO REMAIN

STOREFRONT WINDOWS: EXISTING, TO REMAIN

WINDOWS: ANDERSON E-SERIES, DARK BRONZE METAL CLAD WOOD WITH SIMULATED DIVIDED LITES PER ELEVATIONS (7/8" WIDE MULLIONS, MIN.).

CMU BLOCK: BASALITE SHOT BLAST COLOR 790 OR 791. PAINT TO MATCH EXISTING

STONE VENEER: EXISTING, TO REMAIN

GARAGE DOOR: NICKSBUILDING.COM HERITAGE KNOTTY CEDAR, NO LITES COLOR - NATURAL WITH VAN DYKE BROWN GLAZE, LIGHT DISTRESSED

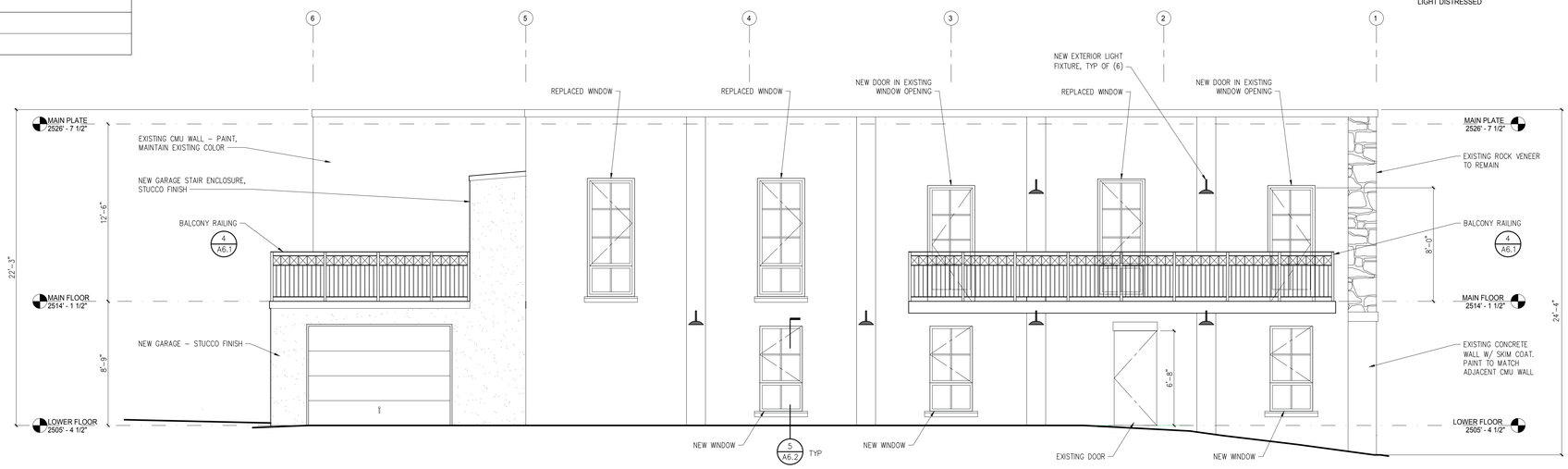

3 SOUTH ELEVATION
SCALE: 1/4" = 1'-0"

DWG. STATUS/REVISIONS

△ 1/6/2020 PLANNING SUBMITTAL

PROJECT:

224 CHURCH ST. TENANT IMPROVEMENT

APN: 005-390-004

OWNER:

JOHN CONGER
224 CHURCH STREET
NEVADA CITY, CALIFORNIA 95959

DRAWN:	W.J.R.
CHECKED:	C.W.A.
DATE:	1/6/2020
SCALE:	AS NOTED
JOB NO.:	19035

EXTERIOR ELEVATIONS

A6.2

C.H.I. OVERHEAD DOORS

FULL-VIEW ALUMINUM

To Agenda

FULL-VIEW ALUMINUM

A dramatic statement, made to fit your contemporary garage door application. Our full-view aluminum garage doors are expertly engineered of aluminum and glass that will give your home the perfect blend of industrial and ultra modern.

3295 shown in clear anodized with optional frosted glass

KEY FEATURES

INSULATION

Optional insulated section rails are available providing additional therrmal protection for your garage space.

BULB SEAL

Integrated bulb seal eliminates air and water infiltration keeping your interiors protected from the unwanted elements.

SECTION CONSTRUCTION

Rail and stile sections are assembled with through bolts for added strength and longevity.

POWDER COATING

Choose from 188 color options that provide a maintenance free, durable finish.

Enjoy the view but keep the noise out!
C.H.I Full-View Aluminum doors have been tested and certified for an STC (sound transmission class) Rating of 27.

To Agenda

PERSONALIZING OPTIONS

Choose from a variety of personalizing options to complement your home's design and create immediate curb appeal.

FINISH

Clear Anodized

SUPER DURABLE POWDER COAT COLORS *All powder coat colors add 1-week lead time*

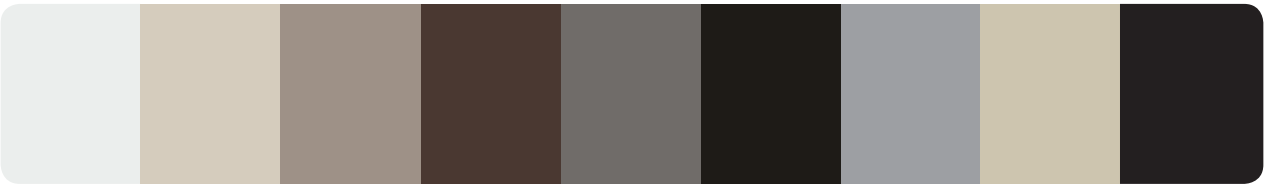

White | Almond | Sandstone | Brown | Bronze | Dark Bronze | Gray | Desert Tan | Black

GLASS

Plain | Frosted | Tinted | Obscure

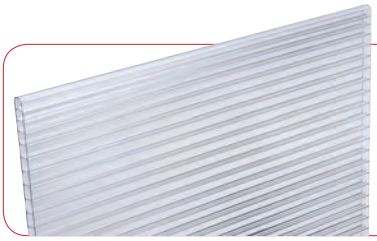

ADDITIONAL GLASS & PANEL OPTIONS

In addition to our standard glass offering, customize your door with specialty glass, solid panels or special materials. Contact your C.H.I. Dealer for options and details.

APPEARANCE PACKAGE

All hardware, including struts and track, is powder coated, creating a complete garage door system with a lasting impression.

Full-View Aluminum Model Comparison Chart

	BETTER	BEST
Section Construction	2" Thick - Hollow aluminum rails with through bolt assembly and bulb seal between sections	2" Thick - Insulated aluminum rails with through bolt assembly and bulb seal between sections
Section Material	Heavy Duty - Aluminum	Heavy Duty - Aluminum
Insulation Type	No Insulation	Polystyrene Insulation
Panel Style / Model Number[2]		
Full-View	**3295**	**3297**
Personalizing Options		
Powder Coating[1]	188 Colors	188 Colors
Windows	•	•
Solid Panels	Insulated or Non-Insulated	Insulated or Non-Insulated
Glass	•	•
Warranty	Limited Lifetime Warranty	

1 Refer to your local C.H.I. Dealer for exact color match. **2** Model number indicates insulation type.

LIMITED LIFETIME WARRANTY

SECTIONS **Limited Lifetime**

SPRINGS **3 Years**

HARDWARE **6 Years**

C.H.I. DEALERS

A BETTER BUYING EXPERIENCE

All C.H.I. doors, replacement parts, and accessories are sold only through our network of C.H.I. dealers: dedicated professionals who install and service our doors with the same quality and workmanship we use to manufacture them.

chiohd.com | 1485 Sunrise Drive | Arthur, IL 61911 | USA

Your Local Garage Door Professional

All information presented is based on the specifications and features available at the time of printing and is subject to change without notice.

CHI051 202-190052 0731 V1 20K / ©2019 C.H.I. Overhead Doors

To Agenda

Flambeaux

GAS & ELECTRIC LIGHTS

Th

Sl

$5(

The

tradi

shap

Size

Pow

Glas

Cont

Copp

Avai

SKU:

Cate

Lake

To Agenda

BIG KAHUNA COPPER CONE GAS TIKI TORCH HEAD

HOME

FREE SHIPPING On Order Over $99

QUESTIONS? CALL US 866-583-1292

Big Kahuna Copper Cone Gas Tiki Torch Head

Be the first to review this product

Quantity:

1

FREE S

Save with a Value Pack

-- Please Select --

~~Regular Price: $229.99~~

Special Price: $179.99

Add to Wis

100% OF ALL DESIGNS are exclusive to Legends Direct.

Share this item with your friends!

PRODUCT DESCRIPTION PRODUCT'S REVIEW

Our Big Kahuna Copper Cone Tiki Torch Head is made of copper and powder coated steel for a long-lasting finish. An adjustment valve allows for a wide range of flame sizes.

Specifications:

- Torch Head Size: 7" W X 13" H
- Fits 2.5" diameter pole (not included)
- Fuel: Liquid Propane or Natural Gas
- Materials: Copper and Powder-Coated Steel
- Not UL Rated

LP Gas Usage:

- @ 49,000 BTU (max.) = .5 gallons/hour
- @ 18,000 BTU (min.) = .2 gallons/hour

Natural Gas Usage:

- @ 49,000 BTU (max.) = 49 cubic feet/hour
- @ 18,000 BTU (min.) = 18 cubic feet/hour

PayPal CREDIT Buy now. Pay over time.
US customers only. Subject to credit approval. See terms

RELATED PRODUCTS

To Agenda

City of Nevada City

TO: Planning Commission

FROM: Amy Wolfson, City Planner

MEETING DATE: February 20, 2020

APPLICANT: Jeffrey Adams, representing property owner, Marc Kieler

RE: Architectural Review for a new detached garage and tree removal at 332 Jordan Street

ATTACHMENTS:

1. Architectural Review and Tree Removal Applications
2. Site Plan
3. Garage Elevations/Renderings
4. Photograph of trees to be removed

ACTION REQUESTED

1. Approve remodel of the existing garage.

SITE SPECIFICATIONS

Lot Size:	1.59 acres	**Lot Coverage:**	50%
Zoning:	RR-Rural Residential	**Building Height:**	35-feet
Setbacks:	Front yard: 50-feet, Rear Yard:25-feet, side yards: 6-feet; Deer Creek: 100-feet	**Historical District:**	Outside

BACKGROUND: The Planning Commission previously approved the existing house along with a detached garage at their meeting on July 5, 2013. These proposed structures were located further toward Deer Creek and were never constructed. The applicant filed an application to remodel the existing 1940 residence in 2013, which expired. There is a current and active permit, issued in 2018, to enclose an existing sunroom and enlarged a rear deck.

PROPOSED GARAGE: The applicant is proposing to construct a 2-car garage with storage space and laundry room space for a total 672 square feet. Materials will be ribbed metal siding and concrete with stone veneer, composite shingle roof, and a salvaged cedar garage door.

Rendering of Proposed Garage

TREE REMOVAL: The applicant is also requesting to remove four cedar trees ranging in size between 6 and 20 inches in diameter. These four trees are located within the building footprint of the proposed garage and are identified on the site plan, attached. The property owner has previously been approved to remove 19 trees by the Planning Commission at their October 18, 2018 meeting, and one dead tree, approved by staff on January 7, 2020.

REGULATORY CONSIDERATIONS:

Architectural Review: The Planning Commission, in their role as the Architectural Review Committee, is required to review proposals for the erection or exterior alterations of any structure, or the remodel, demolition, or razing of any structure. Findings must be made that structures are consistent with Nevada City Architecture and compatible with the surrounding neighborhood.

Tree Preservation: Pursuant to Section 18.01.070 of the City Municipal Code, the Planning Commission may impose mitigation on the loss of any protected tree(s). The total replacement requirement shall be based on the number of tree(s) removed. Mitigation replanting or seedling protection shall be provided with the intent to reflect the character of the site prior to tree removal..

Environmental Review: Because the residential use and residential accessory uses are permitted by right in the RR zoning designation, local authority can only be ministerial in nature. Sections 21080 of the Public Resource Code, of the California Environmental Quality Act (CEQA), exempts ministerial projects from environmental review.

RECOMMENDED MOTION:

A. Make a Motion to Approve the Architectural Review and Tree Removal Applications making the findings 1 through 4 pursuant to Sections 17.88.040 and 18.01.070 of the City Municipal Code:

   1) That the proposed garage l is generally compatible with Nevada City style Architecture; and

   2) That the proposed garage is compatible with the context of the surrounding neighborhood; and

   3) That the removal of up to 19 trees identified in the exhibits provided by the applicant are necessary for reasonable use of the property.

RECOMMENDED CONIDTIONS OF APPROVAL:

1. Nevada City contracts with the Nevada County Building Department for issuance of permits. The County will not issue permits unless the plans have been stamped and approved by Nevada City. Therefore, prior to issuance of a building permit, submit three sets of plans to Nevada City Planning Department, along with a filing fee of $100 (made payable to the City of Nevada City). The plans will be reviewed by the City Planner and City Engineer for consistency with the approval and will require their signatures.

2. All improvements shall substantially comply with the exhibits presented to the Planning Commission.

3. Provide a site plan that delineates two off-street parking spaces meeting the design parameters of Section 17.80.040 of the City Municipal Code.

4. Any firm or person removing the trees shall obtain a business license from City Hall

5. A Planning Commission member shall be appointed as a Liaison to assist the applicant with any minor modifications to the permit, if needed.

CITY OF NEVADA CITY
PAID
JAN 31 2020
RCPT. AMT.
$1000.00
Ck# 2848

OFFICE USE ONLY
Filing Fees
Chk ☐ Cash ☐
Bus. Lic.

CITY OF NEVADA CITY

317 Broad Street • Nevada City, California 95959 • (530) 265-2496

APPLICATION FOR ARCHITECTURAL REVIEW

Applicant/Property Owner

Jeffrey Adams
Name

PO Box 1344
Address

Nevada City, CA 95959
City, State

(530) 530-2020
Phone

jeff@atmospheredesignbuild.com
email address

Check all that apply:
- ☑ A New Building
- ☐ Changes to Existing
- ☐ In the Historic District
- ☐ Other (Describe)

Number of existing units 1

Year of original construction 1935

Supporting data must be attached:
- *Color chips*
- *Material specs, i.e. roofing, windows, etc.*
- *Elevations/Site plans*

Address and Assessor's parcel number of property where construction is proposed (also complete attached location key map):

332 Jordan St.
Street Address

005-140-034-000
Assessor's Parcel Number

Nearest cross street Zion

New floor area proposed 672 S.F.

Briefly describe proposed project:

NEW DETACHED 2-CAR GARAGE WITH STORAGE AND HOOK-UP FOR LAUNDRY, STONE VENEER PRIVACY WALLS WITH GATES, COVERED BREEZEWAY OFF NORTH OF GARAGE AND CONCRETE PATHWAY, STAIR TO NEW CONCRETE LANDING TO CONNECT TO UNDERSIDE OF EXISTING DECK UNDER CONSTRUCTION (PERMITTED SEPARATELY)

Number of dwelling units on property 1

COMPLETE FOR ALTERATIONS TO EXISTING BUILDINGS:

Construction will involve (check all that apply):
- ☐ Foundation replacement
- ☐ Siding replacement - ☐ All siding or ☐ Repairs over _____%
- ☐ Roof replacement
- ☒ Use of metal framed windows
- ☐ Removal of old materials. Describe: _____

DESCRIPTION OF NEW CONSTRUCTION OR ALTERATIONS: Attach architectural elevations or perspective drawing showing all materials, colors, finish, lighting, ornamental devices, and any signs. The Commission prefers color chips.

SUPPORTING DOCUMENTS: Read and complete the attached pages and include any other statements or attach supporting information to substantiate that the architecture is consistent with the Mother Lode Era, or is otherwise consistent with the surroundings. Attach **TEN FOLDED COPIES** of the elevations and/or supporting information, including a site plan showing the existing and proposed building setbacks from all property lines. **ALL BUILDING DIMENSIONS, INCLUDING BUILDING HEIGHTS, MUST BE SHOWN ON THE ELEVATIONS.**

I am the owner or authorized agent for the subject property. If agent, submit letter from property owner.

Jeffrey Adams — Digitally signed by Jeffrey Adams Date: 2020.01.29 15:28:42 -08'00'
Signature

1/31/20
Date

---*FOR OFFICE USE ONLY*---

Approved by:

Signature

Date

Signature

Date

Agenda

PLEASE ATTEND THE PLANNING COMMISSION MEETING TO DISCUSS YOUR REQUEST, OR YOUR APPLICATION WILL BE CONTINUED TO THE NEXT MEETING

CITY OF NEVADA CITY
ARCHITECTURAL REVIEW GUIDELINES
AND SUPPORTING INFORMATION

Please read this document and provide the information that applies to your application. The City also maintains some reference material regarding historical architecture. Ask the City Planner for details.

POLICY DECLARATION:

The City's goal in requiring architectural review is to implement the goals of the City's General Plan by preserving the character of Nevada City architecture in terms of historical value, sit coverage and planning, volume and massing, materials, color, general design and details. Historical District work must be in strict compliance with the Mother Lode Era. Preservation of historic materials is encouraged.

The Planning Commission will review each application on its own merit and in the context of the neighborhood of the project. For example, plywood siding might be acceptable in an area of modern, similar homes, but not in a neighborhood of old Victorian homes.

Generally, Nevada City architecture is characterized by many of these design features typical of the Mother Lode Era: Steep peak roofs with pitches between 6:12 & 12:12, overhanging roofs with gable ends, covered porches and entries; multi-pane, vertical, and by windows, and use of horizontal painted rustic siding. Alterations to older homes should match existing historic materials. Vinyl siding has been declared potentially hazardous by the City's Fire Department.

SITE PLAN AND ENVIRONMENTAL CONSIDERATIONS:

Provide a site plan of the property to scale, showing any proposed tree removal, setbacks, building coverage, fencing and landscaping concepts. Attach a tree removal application form if there will be any trees removed. Show off-street parking areas.

Is the coverage and setback of the new construction compatible with surrounding houses? ☑ Yes ☐ No

Please explain how it is compatible

Garage is fully within required setbacks. Roof is 6:12 pitch matching existing residence. Roofing matches existing house and color of box rib metal siding is similar in color to stucco on existing residence.

VOLUME AND MASSING

Lot Size 69260 SF

Will the proposed building or changes	Yes	No
Have a larger floor plan than surrounding buildings?	☐	☑
Be taller than surrounding buildings?	☐	☑
Block views or sunshine from existing buildings?	☐	☑
Does the site plan provide a private yard area?	☐	☑

Discussion, if needed:

Agenda

MATERIALS

Generally, the City prefers horizontal wood siding, treated wood shingles, composition shingles, or metal roofing, true used brick, new brick, or mine rock veneers and accents, wood windows in older neighborhoods, and roof pitches in excess of 6:12.

Please list all materials that you will use and alterations proposed:

Roof: Composite asphalt shingles Pitch: 6:12

Siding: Bridger Steel Box rib metal paneling

Windows: Andersen 100 Series Fibrex black frame

Trim: 24 gauge metal, Painted wood

Foundation/Pony walls: Board-formed concrete with stone veneer

Decks, porches, railings: Steel

COLORS (Please provide ten color chips per color)

	Color brand, name, number
Roof: Antique Slate	GAF Timberline Antique Slate
Trim: Old Zinc Gray/Ambler Slate	Bridger Steel/Benjamin Moore CW-685
Accents: Black	Powder coated flat black
Railings/Decks: Black	Powder coated flat black

DETAILS

Please provide sufficient information to allow review of the building's details, including:

- Foundation, rock work or veneer accents
- Vents and flues
- Door and window materials, trim and design detail
- Porch and deck framing and railing details
- Garage door

OTHER APPLICABLE INFORMATION

Use the space below to provide any additional information for the Planning Commission.

Stone veneer = Sierra Stone Supply, Wyoming Tumbled Stone
Garage door and gates = Weathered cedar with clear stain
Steel awning and breezeway = powder coated flat black

Agenda

CITY OF NEVADA CITY

317 Broad Street • Nevada City, California 95959 • (530) 265-2496

CHECKLIST FOR ARCHITECTURAL REVIEW APPLICATIONS

Digital Submittal

This packet contains filing forms and instructions for completing a digital architectural review application. Architectural review applications apply to:

1. New Construction – inside or outside of the Historical District
2. Alterations to buildings within Historical District
3. An addition of new floor area that is greater than 25% of the existing, conditioned living area of the residence.

The Planning Commission acts as the Architectural Review Committee for all applications for architectural changes to any buildings and structures, or the removal or demolition of any structures.

Please review the following ordinances which will provide the City's goals in preserving the character of Nevada City architecture in terms of historical value, site coverage and planning, as well as volume and massing, materials, color, general design and details. These ordinances also discuss the standards of architectural review within the Historical District and the definition of "Mother Lode Era" architecture. Even though a property is outside of the Historical District, City Ordinances provide standards for architectural review "in keeping within the context of the neighborhood."

1. ***Ordinance 90-01***
2. ***Ordinance 92-06***
2. ***Historical District Ordinance 338***
3. ***Nevada City Design Guidelines***

PROCESS: Once a complete application has been submitted, it will be scheduled for Planning Commission review. Some applications, such as new construction or major renovations, will require distribution by the City Planner to staff such as the City Engineer, Director of Public Works, Police Chief and the Fire Chief. This can take up to two or three weeks for their review and to provide comments and any conditions. **The City Planner will then schedule the application before the Planning Commission, who meets on 3rd Thursday of each month at 1:30 p.m. at City Hall.** The applicant or their representative MUST be present to discuss the application at this meeting. The applicant will receive a copy of the agenda and staff report prior to the meeting. Once approval has been obtained, a building permit can be obtained from the Nevada County Building Department. The Building Department will require 2 sets of plans that include two City staff signatures (usually City Planner and City Engineer).

Checklist for application submittal: Please include the following items as applicable:

- ☑ 1. Architectural Review application, signed by owner. If signed by a representative, include a letter of authorization from the property owner(s).
- ☑ 2. Project Description – please submit a written description of the work proposed.
- ☑ 3. Filing fee of **$200** if the construction is less than 25% of the original area of the existing home OR **$1,000** for new construction, or if the construction is greater than 25%
- ☑ 4. One digital copy of plans (additional hard copies may be requested at Planner's discretion) sent to the City Planner at amy.wolfson@nevadacityca.gov
- ☑ 5. Five color chips, to be distributed with Commissioner's packets (All commercial projects and residential projects in the Historical District)
- ☑ 6. Photograph(s) of structure or property or of property if vacant
- ☑ 7. All Material specifications, such as for windows, roofing, and siding

NOTE: **SEE FOLLOWING PAGE REGARDING BACKFLOW PREVENTION DEVICE REQUIREMENT**

Agenda

Filing Fees	
Chk	Cash
Bus. Li e.	

CITY OF NEVADA CITY
PAID
FEB 07 2020
RCPT. AMT. 100.00
#2849

CITY OF NEVADA CITY

317 Broad Street • Nevada City, California 95959 • (530) 265-2496

TREE REMOVAL APPLICATION

A City permit is required for removal of any tree with a cumulative diameter at breast height (cbdh) of 4" or greater (Mandrone, Manzanita, Oak); or 6" or greater (all other trees). An arborist's report may also be required. See Ordinance 2004-09 (City Code, Ch 18) for criteria.

NOTE: A $100 administrative fee must be paid when the application is submitted. All applications must include photographs of the tree(s) to be removed and a site plan showing the location of all trees to be removed and approximate locations of any roads and structures.

Street Address/Location 332 Jordan St. APN #: 005-140-034-000

Owner/Representative: Jeffrey Adams Phone #: 530-559-2020

Mailing Address: ~~1344~~ P.O. Box 1344, Nevada City, CA 95959

Email Address: jeff@atmosphere designbuild.com

Company performing tree work Hansen Construction

Identify and describe tree(s) to be removed and state reason(s). Use additional pages if necessary.

Number	Diameter	Species	Reason for removal (See§ 18.01.035)
1	12"	Cedar	Construction of garage
2	20"	Cedar	↓
3	6"	Cedar	
4	9"	Cedar	

Property Owner's Signature: [signature] Date: 2/7/20

********** *Office Use Only* **********

Permit Date: _____ Expiration Date: _____ Remarks

(Mitigation/Protection Measures): _____

Approved by:

Name/Title	Date	Name/Title	Date

J/Forms/Planning/Tree Removal Application-Revised 7/20/07

Agenda

APN 005-140-034-000
1.59 ACRES

SITE COVERAGE SUMMARY

EXIS. RESIDENCE:	800 SF
NEW GARAGE:	672 SF
DECKS/PATIOS:	1641 SF
DRIVEWAY:	2000 SF
TOTAL SF:	5113 SF
SITE SF:	69260 SF
% COVERAGE:	**7.4 %**

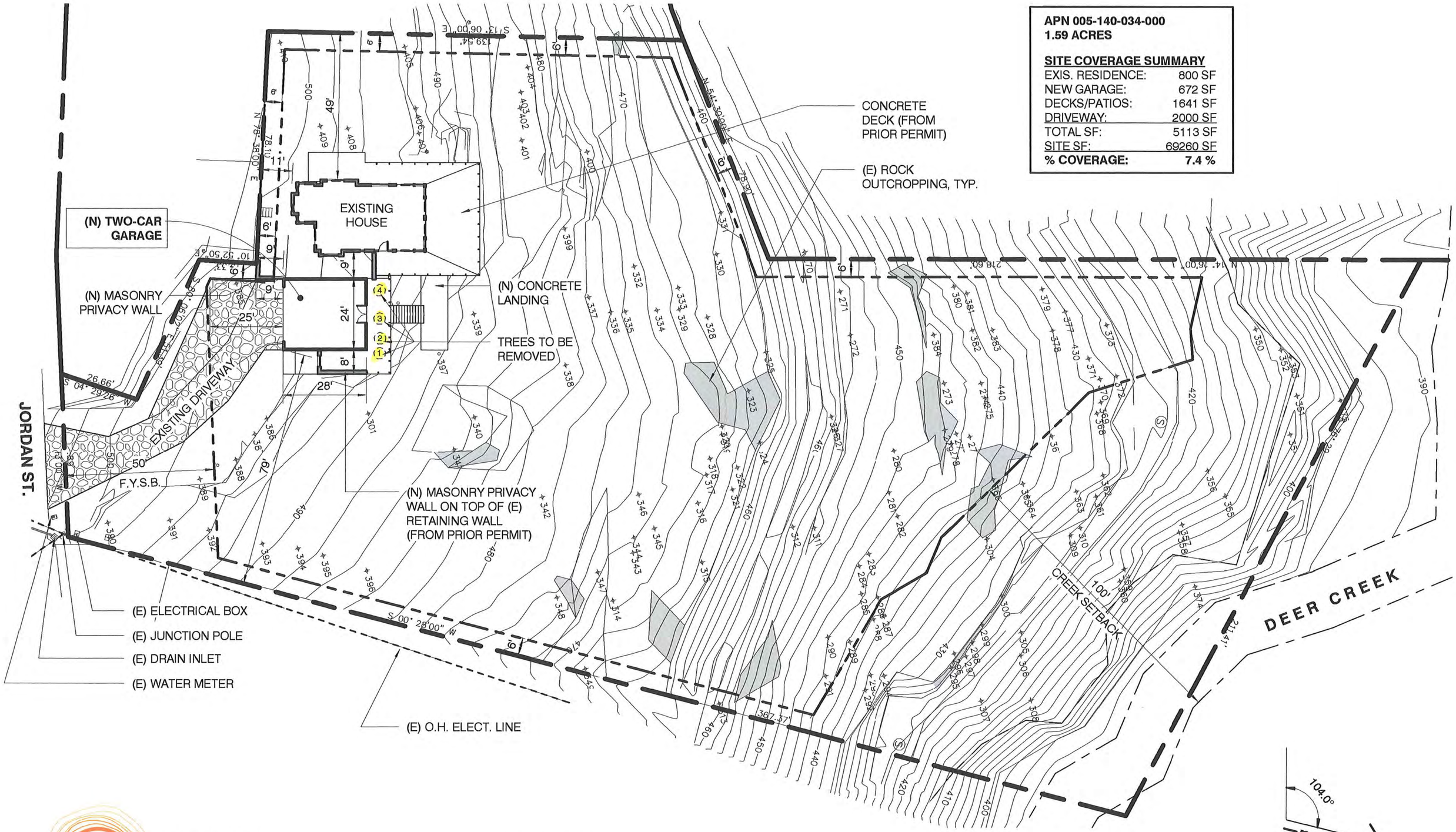

ATMOSPHERE DESIGN BUILD
PO BOX 1344 • NEVADA CITY • CA, 95959
www.atmospheredesignbuild.com
ph: 530.615.7701

Marc Kieler
332 Jordan St.

Architectural Review 01/31/20

ARCH1.0
SITE PLAN

Scale: 1" = 30'-0"

Agenda

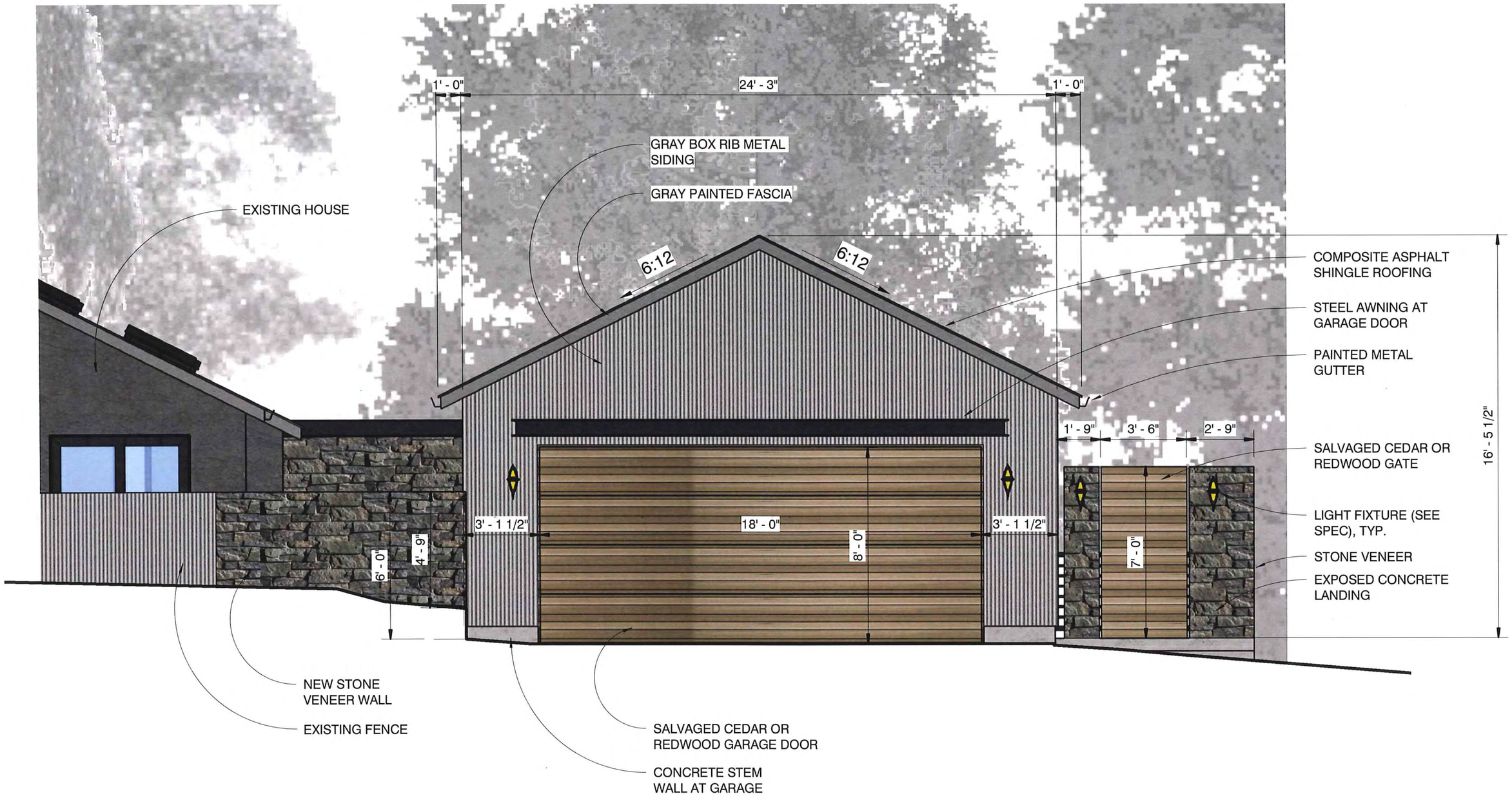

ATMOSPHERE DESIGN BUILD
PO BOX 1344 • NEVADA CITY • CA, 95959
www.atmospheredesignbuild.com
ph: 530.615.7701

Agenda

Marc Kieler
332 Jordan St.

Architectural Review 01/31/20

ARCH2.1
SOUTH ELEVATION

Scale: 1/4" = 1'-0"

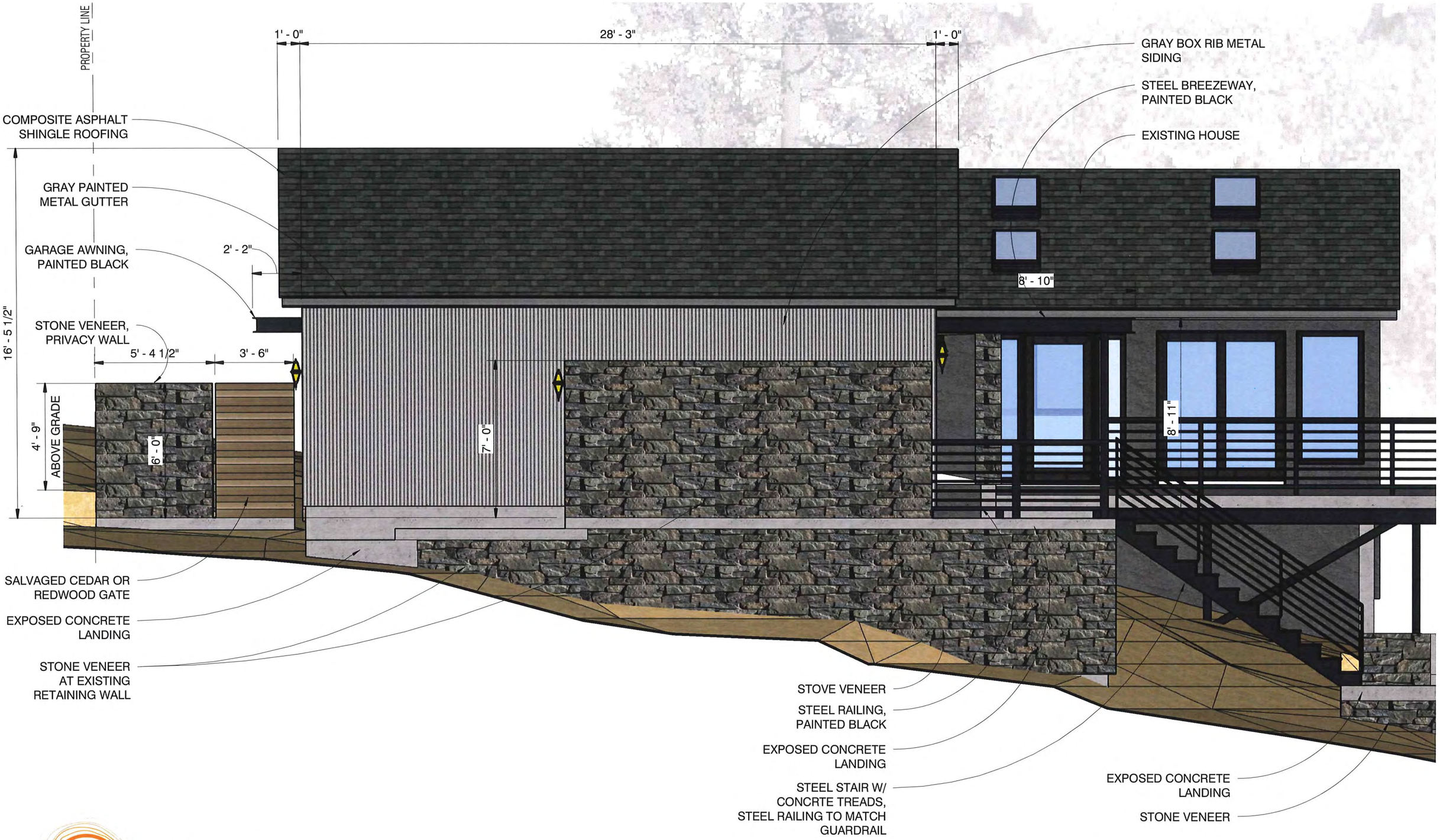

ATMOSPHERE DESIGN BUILD
PO BOX 1344 • NEVADA CITY • CA, 95959
www.atmospheredesignbuild.com
ph: 530.615.7701

Marc Kieler
332 Jordan St.

Architectural Review 01/31/20

ARCH2.2
EAST ELEVATION

Scale: 1/4" = 1'-0"

Agenda

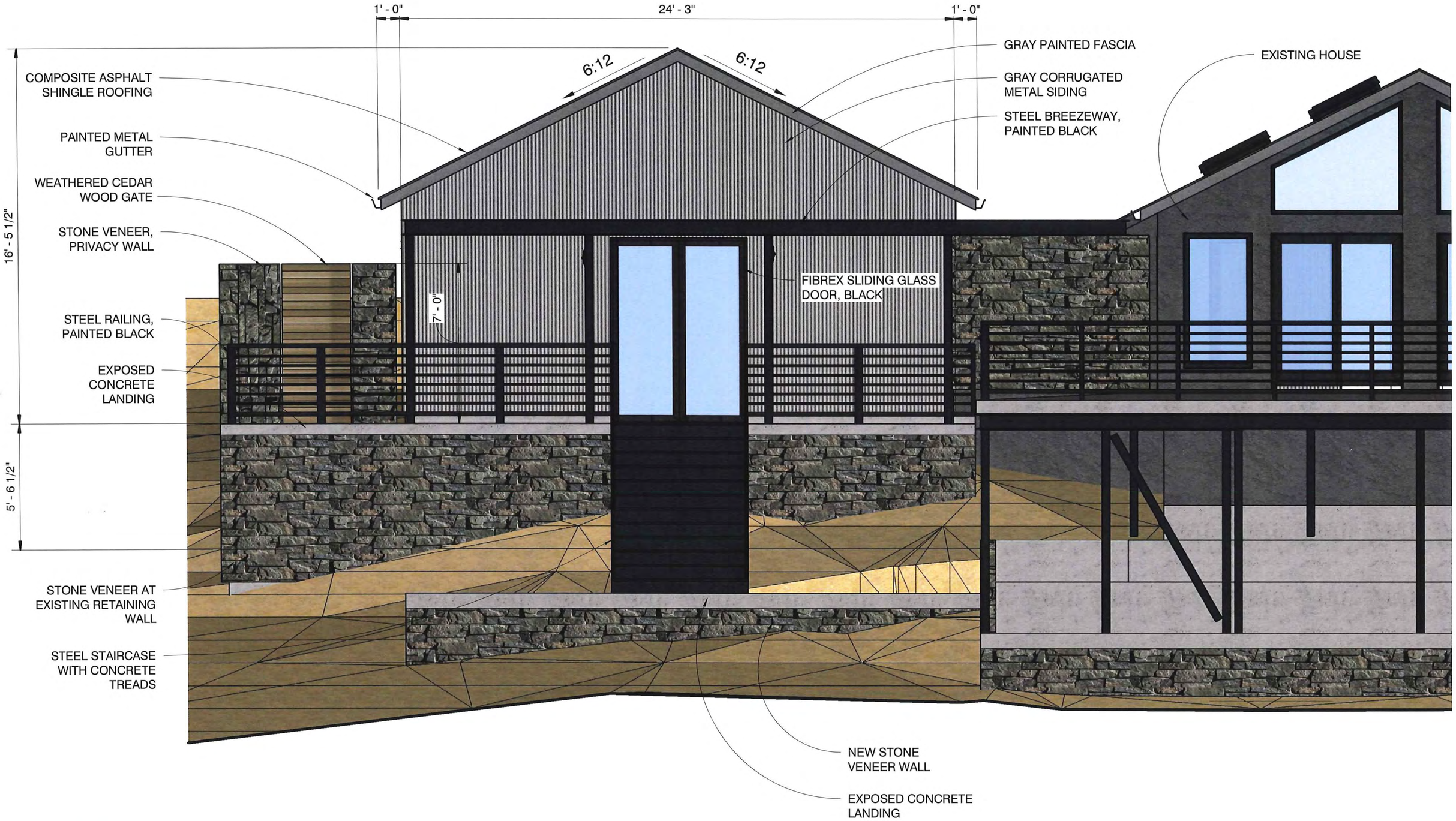

ATMOSPHERE DESIGN BUILD
PO BOX 1344 • NEVADA CITY • CA, 95959
www.atmospheredesignbuild.com
ph: 530.615.7701

Agenda

Marc Kieler
332 Jordan St.

Architectural Review 01/31/20

ARCH2.3
NORTH ELEVATION

Scale: 1/4" = 1'-0"

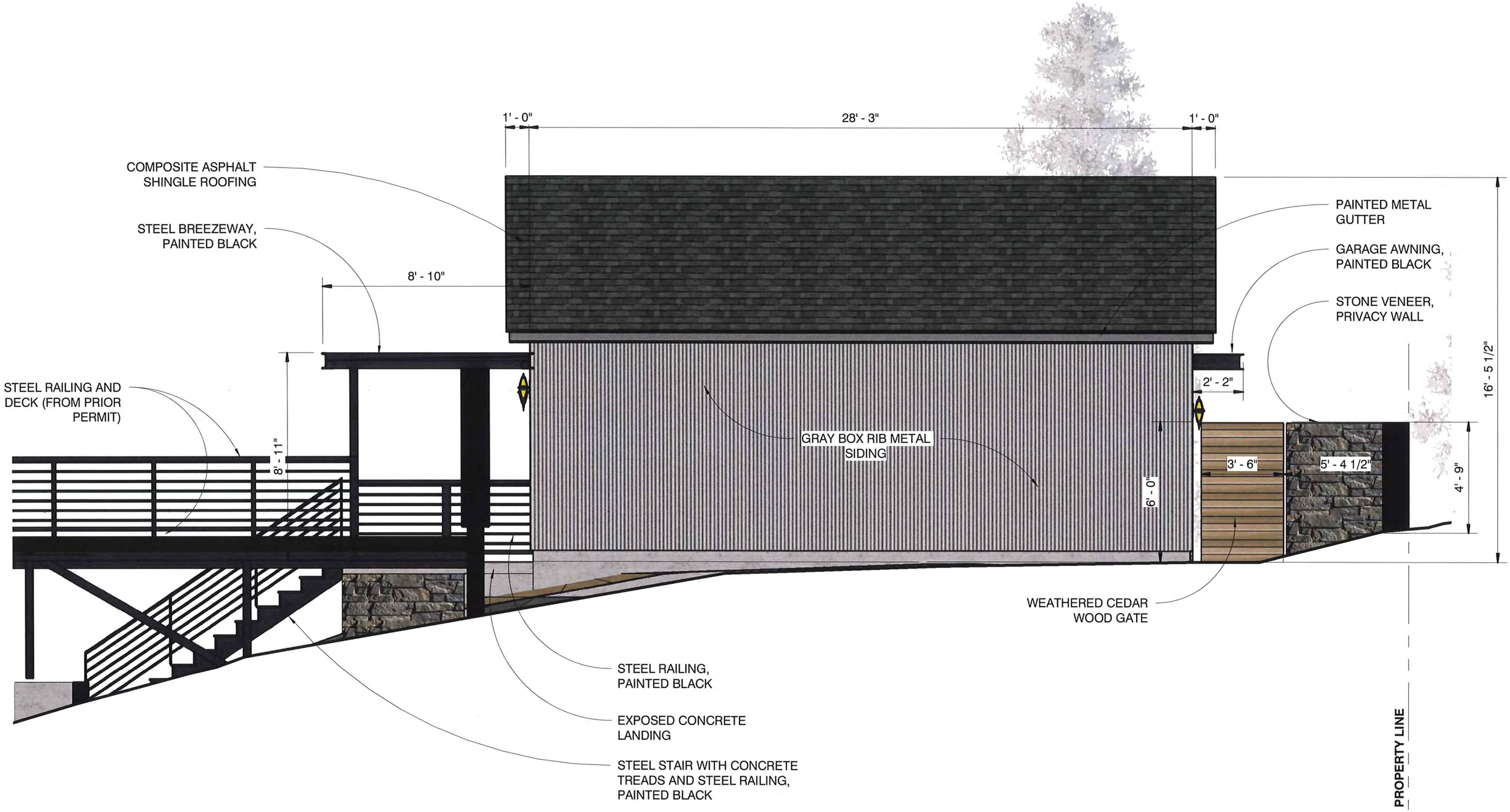

ATMOSPHERE DESIGN BUILD
PO BOX 1344 • NEVADA CITY • CA, 95959
www.atmospheredesignbuild.com
ph: 530.615.7701

Marc Kieler
332 Jordan St.

Architectural Review 01/31/20

ARCH2.4
WEST ELEVATION

Scale: 1/4" = 1'-0"

Agenda

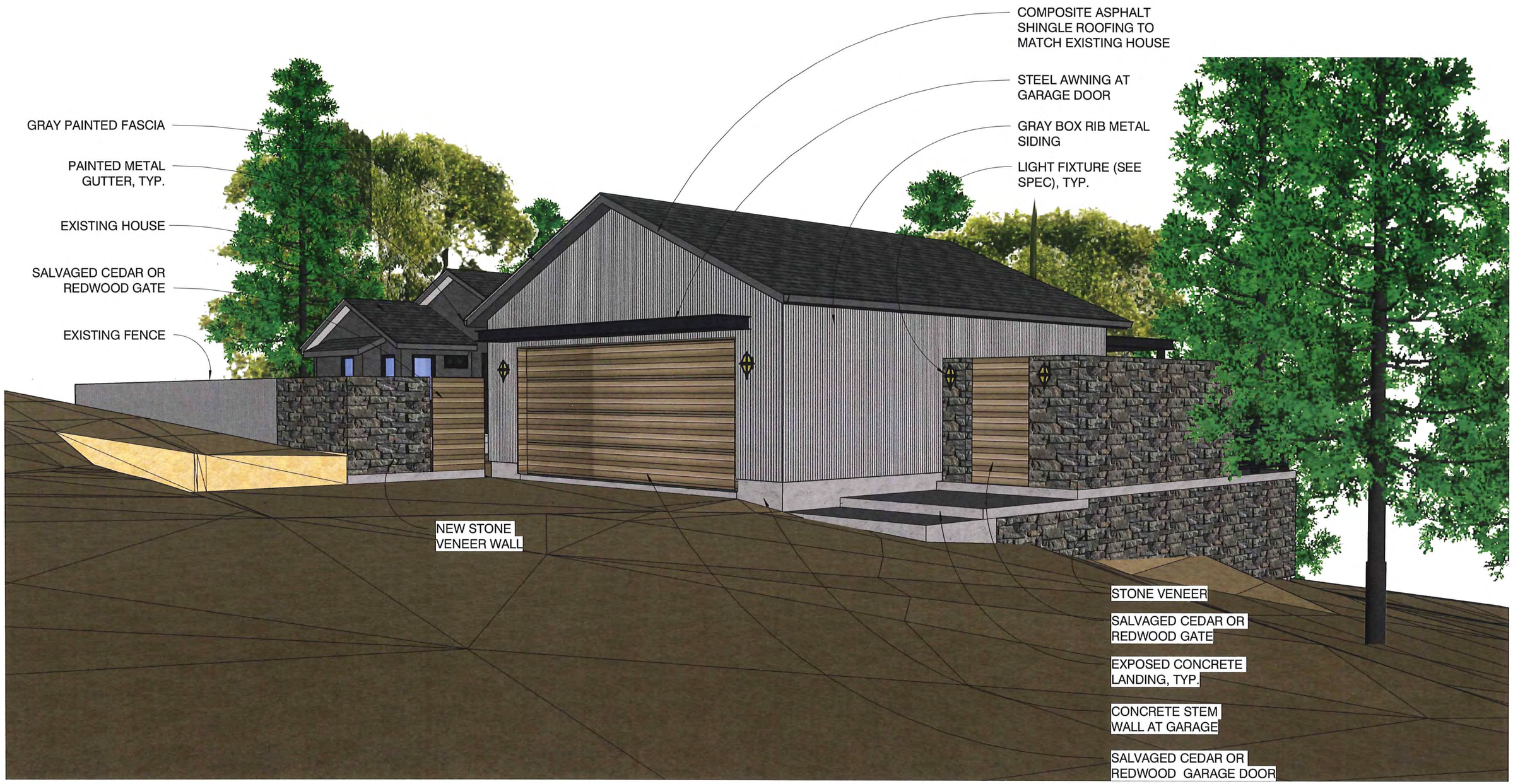

ATMOSPHERE DESIGN BUILD
PO BOX 1344 • NEVADA CITY • CA, 95959
www.atmospheredesignbuild.com
ph: 530.615.7701

Agenda

Marc Kieler
332 Jordan St.

Architectural Review 01/31/20

ARCH3.1
PERSPECTIVE FROM STREET

Scale:

SIDING

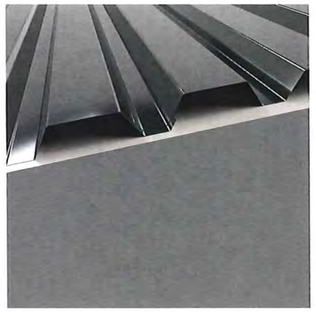

Box rib metal siding

Bridger Steel Old Zinc Gray

TRIM

24 gauge break metal

Bridger Steel Old Zinc Gray

GARAGE DOOR AND WOOD GATES

Salvaged cedar

ROOF

Composite asphalt shingles

GAF Timberline Antique Slate

SITE WALLS

Stone veneer

Sierra Stone Supply
Wyoming Tumbled Stone

DOORS AND WINDOWS

Fibrex frame

Andersen 100 Series Black

STEEL AWNINGS AND RAILINGS

Powder coated steel

Black

LIGHTING

Wall mounted sconce

Lutec Portland 6” wall lantern

FASCIA AND GUTTERS

Painted wood or metal

Benjamin Moore Ambler Slate

ATMOSPHERE DESIGN BUILD
PO BOX 1344 • NEVADA CITY, CA • 95959
www.atmospheredesignbuild.com
T: 530.615.7701

332 Jordan St. Material Board

January 31, 2020

Agenda

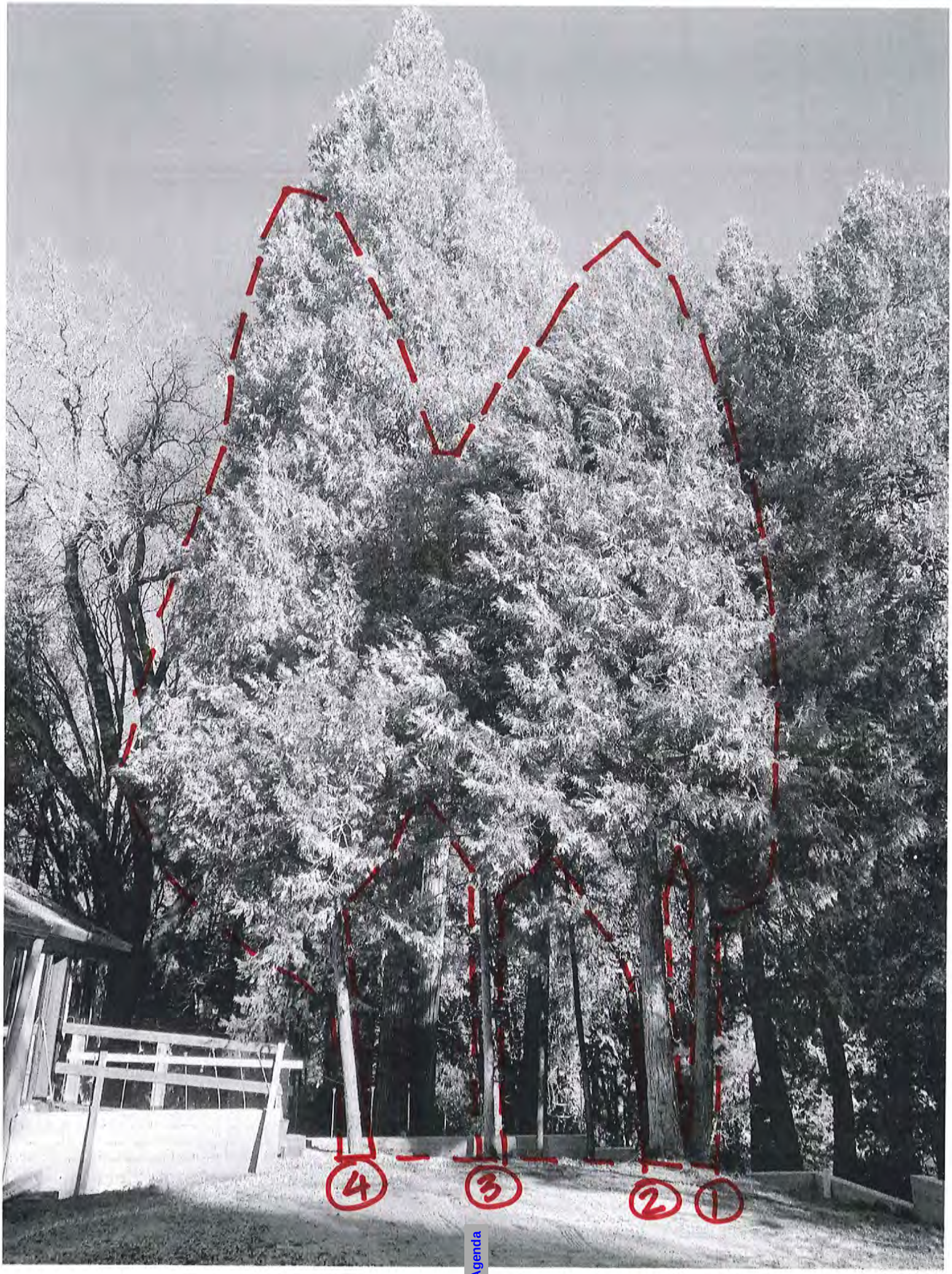
4
3
2
1

City of Nevada City

TO: Planning Commission

FROM: Amy Wolfson, City Planner

MEETING DATE: February 20, 2020

APPLICANT: Nevada County Historical Society, represented by Linda Jack

RE: **Plaque Proposal to Honor Ellen Clark Sargent in Calanan Park (*Continued from the December 19, 2019 meeting)***

ATTACHMENTS:

1. Historic Plaque Application
2. Summary of Revised Plaque Text Exhibit
3. Picture of existing granite form proposed to hold the plaque
4. Chair Andrews guidance to applicant

BACKGROUND: At the November 21, 2019 meeting, the Historical Society presented a plaque proposal to place a plaque in an existing granite form at Calanan Park. The plaque would honor Ellen Clark Sargent's contribution to the women's suffrage movement. The Commission approved the style and location of the plaque with a condition that reference to Aaron Sargent be omitted from the plaque text. At the December 19, 2019 meeting, they returned with a revised option to include a photograph of Ellen Sargent and also asked that the Commission reconsider the condition to omit Aaron Sargent from being referenced. At that meeting the Commission voted to continue the item with direction to the applicant to add language that strengthens understanding of Ellen Sargent's role in the suffrage movement. After the canceling of the January meeting, and upon receiving a request from the applicant to give them a sense about how likely the revised language was to be approved by the Commission, the City Planner reached out to Chair Andrews. She indicated that she was still not happy with the revised text and provided some guidance for the applicant. On February 11, the applicant provided a final version of the proposed text, with little changed except the for the dedication information. A summary of the proposed text changes is attached.

PLAQUE DESIGN: The plaque text has been updated to better highlight Ellen Sargent's role in the eventual passage of the 19th Amendment to the US Constitution. The plaque will be similar in design style to the one mounted on 309 Broad Street (Golden Era), but will feature text honoring Sargent:

Plaque proposal SR
PC 2-20-20

Plaque at 309 Broad St.

Proposed Plaque Text

ELLEN CLARK SARGENT
(1826-1911)

Prominent Suffragist

Ellen Clark Sargent, a native of Massachusetts, arrived in Nevada City in 1852. A leader in the fight for women's right to vote, she founded the Nevada County Woman's Suffrage Association in 1869. She was the President of the California Woman Suffrage Association and Treasurer of the National Woman Suffrage Association. Her tireless work resulted in California women winning the right to vote in 1911. Her campaign for national women's suffrage led to the introduction in 1878 of the 19th Amendment to the U.S. Constitution by her husband, U.S. Senator A. A. Sargent. After many hard-fought battles by the Women's Suffrage Movement, the 19th Amendment was finally enacted into law on August 20, 1920.

Landmark registered _____ __, 2020 by the
Nevada County Historical Landmarks Commission NEV 20-0?
Plaque dedicated 2020 by
The Grand Parlor of the Native Daughters of the Golden West,
The Captain John Oldham Chapter, National Society
Daughters of the American Revolution, and
The Nevada County Historical Society

Landmark registered _____ __, 2020 by the
Nevada County Historical Landmarks Commission NEV 20-0?
Plaque dedicated 2020 by
The Grand Parlor of the Native Daughters of the Golden West,
The Captain John Oldham Chapter, National Society
Daughters of the American Revolution, and
The Nevada County Historical Society

RECOMMEDATION ACTION: Make a motion to approve placement of the plaque as presented, and as may be modified or conditioned by the Planning Commission.

HISTORIC PLAQUE APPLICATION FORM

Building Address: CALANAN PARK, COR. BROAD & UNION STS

Owner's Name(s): NEVADA CITY, FORMERLY NATIVE DAUGHTERS

Telephone Numbers: (Home) _____ (Office) _____

Owner(s) Address: _____

Email Contact: _____

Plaque Vendor Contact: _____ (Email) _____

Date(s) of Original Construction (and of any additions): PARK ACQUIRED BY NATIVE DAUGHTERS - 1922

Provide the following information about your building:

Is this building considered a contributing building to the Nevada City Historic District's inclusion on the National Register of Historic Places? Y / N

Is this building associated with a notable person or event? If so provide a succinct description of the person or event and their relationship with the building.

PLAQUE WILL HONOR ELLEN SARGENT, PROMINENT SUFFRAGIST. SHE FOUNDED NEVADA COUNTY WOMAN'S SUFFRAGE ASSOCIATION IN 1869. THE ASSOCIATION MET IN VARIOUS BUILDINGS, SOME OF WHICH NO LONGER EXIST, LOCATED AROUND CALANAN PARK

Please sign the following statement:

The applicant(s) certifies that the information on this application is true and accurate to the best of his/her knowledge.

Signed: _____

Print Name: _____

(if not the owner, an owner authorization statement must be submitted)

Date: _____

Agenda

HISTORIC PLAQUE APPLICATION FORM

Building Address: Calanan Park, corner of Broad St. and Union St.

Owner's Name(s): Nevada City, formerly Native Daughters of the Golden West

Telephone Numbers: (Home) (Office)

Owner(s) Address:

Email Contact:

Plaque Vendor Contact: TBD (Email) _____

Date(s) of Original Construction (and of any additions): Park acquired by Native Daughters in 1922

Provide the following information about your building:

Is this building considered a contributing building to the Nevada City Historic District's inclusion on the National Register of Historic Places? Y / N

Is this building associated with a notable person or event? If so provide a succinct description of the person or event and their relationship with the building.

The plaque will honor Ellen Clark Sargent, a prominent suffragette who was an important advocate for woman's suffrage at the local, state, and national level. She arrived in Nevada City in 1852, joining her husband Aaron A. Sargent who had arrived in the city in 1849. Ellen's advocacy of the woman's suffrage movement spanned much of her adult life, from the late 1860s until her death on July 13, 1911. Susan B. Anthony was a close friend of Ellen, and a frequent guest in the Sargent homes in California and Washington D.C. Ellen was associated with many of the important national suffrage organizations. Regrettably, Ellen died three months before California voted to grant women the right to vote in the election of October 10, 1911.

Ellen's political activism in Nevada City included the formation of the Nevada County Woman's Suffrage Association in 1869. The organization included many of the prominent women of the city and had male advocates as well. The organization's activities cannot be associated with any particular location(s) in Nevada City as the meetings were held at the homes of at least six of the members, and at several different public buildings, some of which no longer exist. But most of their meetings were held in the downtown area. The night before the California election on October 10, 1911, a grand rally was held as the crowd processed through the streets down to the bottom of Broad Street for speeches and music. Calanan Park would provide a central focus for the woman's suffrage movement locally, and for Ellen Clark Sargent's contributions to it.

Please sign the following statement:

The applicant(s) certifies that the information on this application is true and accurate to the best of his/her knowledge.

Signed: Linda K. Jack

Print Name: Linda K. Jack, Nevada County Historical Society (if not the owner, an owner authorization statement must be submitted)

Date: 10-1-2-19

Agenda

11/21/19 Proposal

ELLEN CLARK SARGENT (1826-1911)

Prominent -Suffragette

A longtime resident of Nevada City and founder of the Nevada County Woman's Suffrage Association in 1869. President of the California Woman Suffrage Association. Treasurer of the National Woman Suffrage Association. Led the campaign that secured California women the right to vote in 1911. Inspired the 19th amendment to the U.S. Constitution, which had been introduced by her husband, Senator Aaron A. Sargent, in 1878 and enacted on August 20, 1920.

Nevada County Historical Landmark
Registered _____ __, 2020: NEV 20-0?
Plaque dedicated 2020 by [name participating orgs.]

12/19/19 Proposal

ELLEN CLARK SARGENT
(1826-1911)

Prominent Suffragist

Ellen Sargent, a native of Massachusetts, arrived in Nevada City in 1852. In 1869, she founded the Nevada County Woman's Suffrage Association. She became President of the California Woman Suffrage Association and Treasurer of the National Woman Suffrage Association. She led the campaign that resulted in California women winning the right to vote in 1911. She inspired the 19th amendment to the U.S. Constitution, introduced in 1878 by her husband, U.S. Senator A.A. Sargent, and enacted on August 20, 1920.

Nevada County Historical Landmark
Registered _____ __, 2020: NEV 20-0?
Plaque dedicated 2020 by
The Native Daughters of the Golden West,
The Daughters of the American Revolution, and
The Nevada County Historical Society

1/16/20 Proposal
(Meeting canceled. Reached out to
Chair Andrews for comment on this text)

ELLEN CLARK SARGENT
(1826-1911)

Prominent Suffragist

Ellen Clark Sargent, a native of Massachusetts, arrived in Nevada City in 1852. A leader in the fight for women's right to vote, she founded the Nevada County Woman's Suffrage Association in 1869. She was the President of the California Woman Suffrage Association and Treasurer of the National Woman Suffrage Association. Her tireless work resulted in California women winning the right to vote in 1911. Her campaign for national women's suffrage led to the introduction in 1878 of the 19th amendment to the U.S. Constitution by her husband, U.S. Senator A. A. Sargent. After many hard-fought battles by the Women's Suffrage movement, the 19th amendment was finally enacted into law on August 20, 1920.

To Agenda

Landmark registered _____ __, 2020 by the
Nevada County Historical Landmarks Commission NEV 20-0?
Plaque dedicated 2020 by
The Grand Parlor of the Native Daughters of the Golden West,
The Captain John Oldham Chapter, National Society
Daughters of the American Revolution, and
The Nevada County Historical Society

2/20/20 Proposal

ELLEN CLARK SARGENT
(1826-1911)

Prominent Suffragist

Ellen Clark Sargent, a native of Massachusetts, arrived in Nevada City in 1852. A leader in the fight for women's right to vote, she founded the Nevada County Woman's Suffrage Association in 1869. She was the President of the California Woman Suffrage Association and Treasurer of the National Woman Suffrage Association. Her tireless work resulted in California women winning the right to vote in 1911. Her campaign for national women's suffrage led to the introduction in 1878 of the 19th Amendment to the U.S. Constitution by her husband, U.S. Senator A. A. Sargent. After many hard-fought battles by the Women's Suffrage Movement, the 19th Amendment was finally enacted into law on August 20, 1920.

Landmark registered _____ __, 2020 by the
Nevada County Historical Landmarks Commission NEV 20-0?
Plaque dedicated 2020 by
The Grand Parlor of the Native Daughters of the Golden West,
The Captain John Oldham Chapter, National Society
Daughters of the American Revolution, and
The Nevada County Historical Society
Landmark registered _____ __, 2020 by the
Nevada County Historical Landmarks Commission NEV 20-0?
Plaque dedicated 2020 by
The Grand Parlor of the Native Daughters of the Golden West,
The Captain John Oldham Chapter, National Society
Daughters of the American Revolution, and
The Nevada County Historical Society

Amy Wolfson

From: Josie Laine <josielainek@gmail.com>
Sent: Friday, February 7, 2020 2:40 PM
To: Amy Wolfson
Subject: Re: Sargent Plaque

My feelings on it haven't changed (nor has the text on the plaque). I went by and looked at his grave marker and she is not even mentioned on that-her burial site is unknown. I feel pretty strongly that she should have her own plaque-as her husband does. She continued to fight for women's rights long after her husband died and thousands of people attended her funeral service in San Francisco. The text that Aaron Sargent proposed was what was used to eventually craft the 19th amendment, and it was the first time voting rights for women had been formally proposed by a member of congress. It was debated for more than 40 years (!) before it was ratified.

If for whatever reason, they think that it's imperative that they include Aaron I'd be ok with something like this:

Her campaign for national women's suffrage led to the introduction in 1878 of what would become 19th amendment to the U.S.Constitution by U.S. Senator A. A. Sargent.

From: Josie Laine <josielainek@gmail.com>
Sent: Friday, January 24, 2020 7:41 AM
To: Amy Wolfson <Amy.Wolfson@nevadacityca.gov>
Subject: Re: Sargent Plaque

I'm super bummed to miss next months meeting. I'm going to be out of town this weekend for a memorial. I'll take a look at the place and get back to you with some feedback by next week.

I've had several people ask about the new Chevron lights on their price kiosk. Is there a way that we can address that?

On Thu, Jan 23, 2020, 3:26 PM Amy Wolfson <Amy.Wolfson@nevadacityca.gov> wrote:

Hi Josie,

I am reaching out to you as Chair, but also as the commissioner who appeared to have the strongest feelings about the text of the plaque honoring Ellen Sargent at Calanan Park.

It is not looking like we'll have a quorum of commissioners available for a Special Meeting so all of January's agenda items will have to wait until the February meeting, including the plaque. I know you aren't going to be at that meeting, but I do think the other commissioners value your opinion, particularly on this issue. Can you give me your opinion about the plaque as revised (see attachment)? Evidently, the plaque applicants need to get something in to the plaque designer soon in order to get in the que to make their summer deadline. I think they'd just like to have a sense about whether this version has a chance of getting through. I'd like to be able to share your thoughts with the applicant and the other commissioners at the meeting if that's okay with you.

Amy Wolfson

To Agenda

16X16

Agenda

City of Nevada City

TO: Planning Commission

FROM: Amy Wolfson, City Planner

HEARING DATE: February 20, 2020

APPLICANT: National Exchange Hotel ownership group, represented by Anne L'Esperance

RE: Application for a Sign Variance from Development Performance Standards and Historic District Signage Standards at the National Hotel, located at 211 Broad Street

ATTACHMENTS:

1. Applications (Variance, Sign Application)
2. Sign Elevations/Details
3. National Hotel Signage
4. Similar Historic Signage
5. Comments received from the Nevada County Historical Society at the October 17, 2019 meeting

ACTIONS REQUESTED

1. Approve a Variance Request to allow a sign that does not conform to Development Performance and Historic District standards

SITE DEVELOPMENT STANDARDS

Lot Size:	0.49 acres	**Lot Coverage:**	100%
Zoning:	GB-HD-SC	**Building Height:**	40-feet
Setbacks:	None	**Historical District:**	Within

BACKGROUND: The National Hotel at 211 Broad Street is depicted on the 1898 Sanborn Map, showing a brick building. It is also considered a contributing building to the Nevada City Historical District, provided in the National Register of Historic Places. At the July 18, 2019 meeting the Planning Commission considered an Architectural Review application for an exterior renovation. At that meeting, the Commission approved some aspects of their application and provided direction on other aspects. Among their directional items was a suggestion that the applicant consider a Variance for a painted sign that was included in their architectural rendering, noting the concerns. A sign Variance was placed on the October 17, 2019 agenda, but at the applicant's request, the Planning Commission voted to continue the matter to a future meeting. The Commission still opened the matter up for public comment and those comments may be heard on the video record at this link: https://www.nevadacityca.gov/agendaview.aspx?aid=11528&categoryid=9948#video. The current proposal has been revised since that initial proposal in response to public comment.

SIGN VARIANCE PROPOSAL: The applicant is in process of renovating the historic National Exchange Hotel. They are proposing to paint a sign on the east side of the building. The proposed sign is proposed to be approximately 100 square feet and oriented vertically along the front of the building's east side. The Variance application is a request to deviate from two sections of the Zoning Ordinance:

1)17.80.180 which states that "no exterior surface of any building or structure in any zone shall be painted in any color or with graphic design whereby such color or super-graphic shall constitute a message, code, or signal. Legal signs are excepted here from."

2) Section 17.68.080 (E) which states that "no single sign shall exceed 24 square feet in area" within the historic district.

The applicant has provided an early illustration of the National Hotel that appears to show a painted sign in a similar location as the proposed sign, though the design, dimensions, and orientation are different from the historic depiction.

PROPOSED SIGNAGE:

Proposed hand-painted sign (east side)

Existing Hotel Signage:

Existing Sign overhanging Broad Street

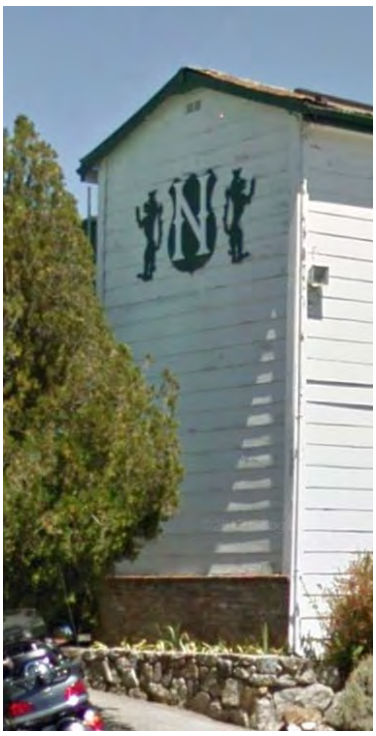

Cottage south of main hotel, west side

Historic Hotel Signage:

Remnants of an old sign covered by paint

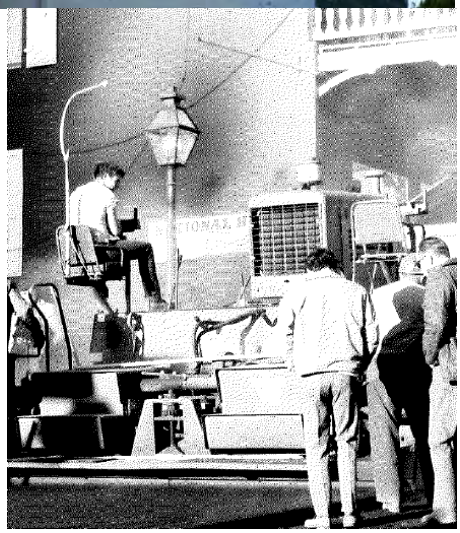

1972-During Street Repaving (painted sign on building in background)

Hotel Advertisement circa 1875

NATIONAL EXCHANGE HOTEL

AND

STAGE HOUSE.

S. A. EDDY, - - - - PROPRIETOR.

The NATIONAL EXCHANGE HOTEL is the finest structure north of Sacramento—fire-proof, modern in all its appointments, elegantly furnished, and recently renovated throughout. The Table Fare is exceptionally good, and accommodation for families especially provided.

CHARGES TO SUIT THE TIMES. FREE BUSS TO AND FROM THE DEPOT.

Stages leave the House for North San Juan, Camptonville, Forest City, Alleghany, Pike City, Mountain House, Downieville, Lake City, Malakoff, North Bloomfield, Derbec Mine, Moore's Flat, Graniteville, You Bet, Little York and Dutch Flat.

THE NATIONAL BAR & BILLIARD ROOM

Constantly supplied with

THE VERY BEST WINES AND CIGARS

Descriptive.—The NATIONAL EXCHANGE HOTEL is situated on the south side of Broad Street, in the center of the business portion of the city. It is built of brick, fronting on Broad Street eighty feet, and extends back to Spring Street. It has 100 rooms, and is supplied in all parts with gas and water. It is now owned by Col. A. H. Eddy. The National Exchange Hotel Co., a corporation organized Nov. 16, 1863, built it, the main part being completed in the Spring of 1864, and the easterly addition in 1866. The corporation still exists, A. H. Eddy, Edwin Tilley and E. H. Gaylord comprising the Board of Trustees. Mr. Tilley is President of the Board. John I. Caldwell has been Secretary of the Company since March 6th, 1866.

REGULATORY CONSIDERATIONS:

Variance: Pursuant to Section 17.88.030 of the City Municipal Code A Variance request can only be approved when the Commission can make a finding that there are "special circumstances applicable to the property, including size, shape, topography, location, or surroundings, [that] the strict application of [site development standards] deprives the property of privileges enjoyed by other properties in the vicinity and under identical classification." A finding must also be made that a Variance does not constitute a special privilege inconsistent with the limitations upon other properties in the vicinity and zone and a project may be conditioned as necessary to make that finding. Staff has provided findings that the commission may use to support the signage as part of the recommended motions below.

The applicant is requesting that the Planning Commission find that the historic nature of the building, as well as the use as a hotel be considered special circumstances of that may be used to support a Variance. The plaque on the hotel indicates it to be "one the oldest continuous running hotels west of the Rockies," and is certainly the oldest continuous running hotel within the City. By a large margin, it is also the largest capacity hotel in the Historic District. There are few buildings as prominent as the National Hotel within the Historic District. The Stonehouse, Alpha Building and the Courthouse have similar stature in terms of size and iconic architecture. It is also one of few buildings that carries an individual designation on the Historic Register of Historic Places as National Register no. 73000416 and also registered as California Landmark no. 899, along with its contributing status to the Historic District, designated as Register no. 85002520. In order for the Planning Commission to support the project, they will have to make a finding that the historic nature of the hotel and it's use as the largest hotel in the Historic District, are special circumstances that warrant a Variance to the City's sign Ordinance, and because of those special circumstances strict adherence to the Ordinance deprives the property of privileges enjoyed by other properties.

The Commission must also find that the allowance of the sign does not constitute a special privilege inconsistent with the limitations upon other properties within the General Business and Historic District. Other properties would not be allowed to have such signage so the commission would have to specifically find that some quality of the building itself, such as its size or architecture, deprive the business a means to provide meaningful signage that is not diminished by the building's stature, particularly with the overhanging balconies along the building face. The use of the building as a hotel, which requires clear and easy visibility for registered guests that may be unfamiliar with the City to be able to readily find their hotel accommodation when they enter downtown.

Historic District Signage: 17.68.080- Signs—Requirements and Restrictions
No sign shall be placed, erected, altered or relocated on any property within the historical district unless such sign is, as to its exterior appearance, compatible with the Mother Lode type of architecture, and unless it complies with all of the following requirements:

- No sign shall be allowed except a sign which identifies or advertises the business conducted on the premises.
- Each sign shall be affixed to a building, except that where the building is set back from the street to such extent that a sign affixed to the building would not be within reasonable view from the street, then a sign need not be so affixed, but may be located in some other manner as the planning commission shall approve.
- No single sign shall exceed twenty-four square feet in area ***(Variance Request)***
- The aggregate area of all signs of any one business entity shall not exceed twenty-four square feet; provided, however, that a single business entity having public customer entrances on two or more sides of a building may treat each such side as a separate entity.

Buildings and Structures used as Signs: 17.80.180 states that "no exterior surface of any building or structure in any zone shall be painted in any color or with graphic design whereby such color or super-graphic shall constitute a message, code, or signal. Legal signs are excepted here from."

Sign Design Guidelines: The Planning Commission has previously reviewed signage proposals whereby signage was proposed on a side without a public entrance, as is the case with the proposed sign. On an appeal of a sign similarly proposed, the City Council had made a finding that the sign was inconsistent with the Sign Design Guidelines, which reads as follows:

> *"The City Council, in 1987, clarified the zoning ordinance as to signage relative to building entrances and they unanimously voted "that each public entrance on each street may have 24 square feet of signage. Multiple businesses would share the 24 square feet and the design must be located on the side of the business entrance."*

However, the interpretation made by Council in 1987 was placed only in the "Design Guidelines" and not actually adopted by an Ordinance. This leaves it somewhat up to interpretation for each subsequent Council and Planning Commission bodies as the design guidelines are " advisory only."

ENVIRONMENTAL REVIEW: The proposed project is for a Variance to the City's Development Performance and Historic District sign standards. Staff recommends that the Planning Commission find the project is exempt from environmental review pursuant to §15301 of the California Environmental Quality Act (CEQA) guidelines. The CEQA Guidelines for Categorical Exemption §15301, which "consists of minor alterations of existing public or private facilities…involving no or negligible expansion of use.

RECOMMENDED CONIDTIONS OF APPROVAL:

1. Nevada City contracts with the Nevada County Building Department for issuance of permits. The County will not issue permits unless the plans have been stamped and approved by Nevada City. Therefore, prior to issuance of a building permit, submit three sets of plans to Nevada City Planning Department, along with a filing fee of $100 (made payable to the City of Nevada City). The plans will be reviewed by the City Planner and City Engineer for consistency with the approval and will require their signatures.
2. All improvements shall substantially comply with the exhibits presented to the Planning Commission.
3. All future structures/features shall conform to site development standards unless another Variance is approved by the Planning Commission.
4. A Planning Commission member may be appointed as a Liaison to assist the applicant with any minor modifications to the permit, if needed.
5. No neon, no banners, and no A-frame signage are permitted.
6. All improvements shall substantially comply with the exhibits presented to the Planning Commission.
7. A Planning Commission member may be appointed as a Liaison to assist the applicant with any minor modifications to the permit, if needed.
8. The decision of the planning commission may be appealed to the city council not later than fifteen (15) days after this final action or decision. Any work during this period is at the applicant's own risk.

RECOMMENDED MOTIONS:

I. Make a Motion to find the project is exempt from environmental review pursuant to §15301 of the California Environmental Quality Act (CEQA) guidelines making the following finding:

   1. That proposed sign constitutes a minor alteration of existing private building and does not provide for an expansion of use.

II. Make a Motion to approve a Variance request making the following findings pursuant to Section 17.88.030 of the City Municipal Code:

   1. That there are special circumstances applicable to the property, including the historic nature of the hotel building whereby the proposed sign contributes to its historic significance along with the use of the building as the largest hotel within the Historic District which contributes to the City's economic vitality; and
   2. That the Variance to the sign standards does not constitute a special privilege inconsistent with the limitations upon other properties in the vicinity and zone in which such property is situated because the size and architectural style deprive the business a means to provide meaningful signage that is not diminished by the building's stature, particularly with the overhanging balconies along the building face, whereas other commercial buildings without such large imposing balconies are able to provide easily visible signage; and
   3. The hotel is often a visitor's first point of contact and use as such requires clear and easy visibility for registered guests that may be unfamiliar with the City to readily find their hotel accommodation when they enter downtown.

III. Make a motion to approve the historic district sign as conditioned, making finding 1 below:

   1. The historic district sign is, as to its exterior appearance, compatible with the Mother Lode type of architecture

NEVADA CITY PLANNING COMMISSION

APPLICATION FOR VARIANCE

The undersigned, requests that a VARIANCE from the provisions of Ordinance No. 361 be granted, pursuant to Section 16.20 of said Ordinance, and hereby certifies as follows:

OWNER'S NAME: The National Hotel

ADDRESS: 211 Broad Street, Nevada City, CA 95949 PHONE:

LOCATION OF SUBJECT PROPERTY: THE NATIONAL HOTEL, 211 BROAD ST. NEVADA CITY, CA 95949

ASSESSOR'S PARCEL NO. ZONE: PRESENT USE:

NATURE OF REQUESTED VARIANCE: TO HAVE A HANDED PAINTED SIGN, WITH HISTORICAL REFERENCE, PUT ON THE EAST SIDE OF THE BUILDING

STATEMENT OF HARDSHIP (Note: The Planning Commission is not authorized to grant a variance if the result would be to confer a special privilege inconsistent with the limitations placed upon other properties in the same zone):

(a) The following special circumstances or conditions applicable to subject property (including size, shape, topography, location or surroundings) do not generally apply to other properties in the same zone.

The National Hotel is a historic building with great signifiance to the community, it is located in the Historical District and we know that the city has a strong commitment to its preservation.
This Hotel is one of a kind and possibly has one of the highest levels of historical significance in the area. Sitting close to the highway, it poses as a beacon to Nevada City and it's historical downtown district.

(b) The granting of a variance would not be materially detrimental to the health, safety or welfare of other persons residing in the vicinity of the subject property, or to other property or improvements in the vicinity, for the following reasons:

We do not believe that the hand-painted sign would interfere, harm or have any negative effect on any other business in downtown Nevada City, on the contrary, we believe that it will only benefit and highlight the Historic District. Due to the hotel's unique size and location, the signage on the East side of the building would he a huge benefactor to tourism by being spotted from the highway & its likelihood to be photographed and shared on the likes of social media. The history of hand painted-signs on historical buildings, not only in Nevada City, but during the time of the National's early life, can be seen in books and photographs found in our own library and historical museum. Returning such a feature to the National & Nevada City could add a level of authenticity in the preservation of the area. We believe that a hand-painted sign not only celebrates the National Hotel's unique character, it would enrich the historical life and culture of the historical downtown district of Nevada City.

ATTACH MAP or SKETCH showing boundary lines of subject property, adjacent streets, and other relevant facts. SUBMIT 10 COPIES OF APPLICATION AND ACCOMPANYING DOCUMENTS.

8/26/19
Date

Signature of Applicant

*This is a 3 part Variance:
1) for a Hand-Painted Sign
2) for such a sign to be painted on a wall w/out and entrance
3) for the sign to exceed the 24'sq. ft allotment

CITY OF NEVADA CITY
317 BROAD STREET
NEVADA CITY, CA 95959

* A separate proposal for allowed signage on the north and south elevations will be presented at the March Planning Commission

To Agenda

EAST WALL MURAL

THE NATIONAL EXCHANGE HOTEL, NEVADA CITY, CA

"Our design team created the National Exchange Hotel exterior signage to be both historically sympathetic to the hotel's Gold Rush origins and in keeping with the neighbouring businesses."

SIGNAGE OF THE NATIONAL

VIEW FROM BROAD STREET

HISTORIC DRAWING OF HOTEL

VICINITY MAP

REMNATS ON REAR WALL

ALPHA HARDWARE SIGN

VISIBILITY OF EAST WALL

HISTORICAL USE OF HAND PAINTED SIGNS IN NEVADA COUNTY

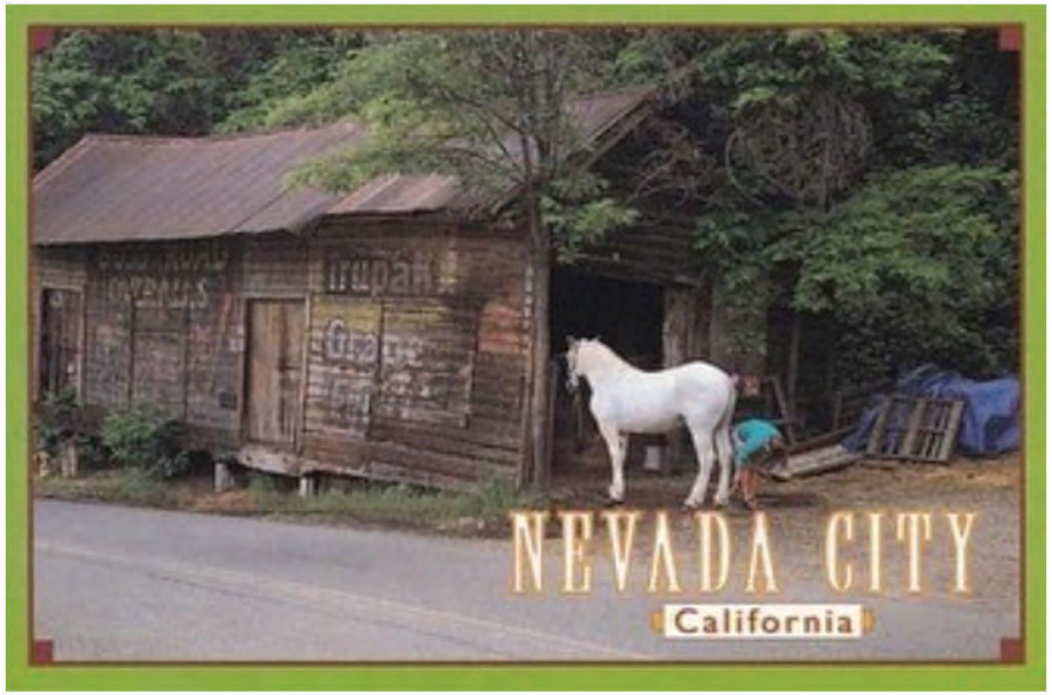

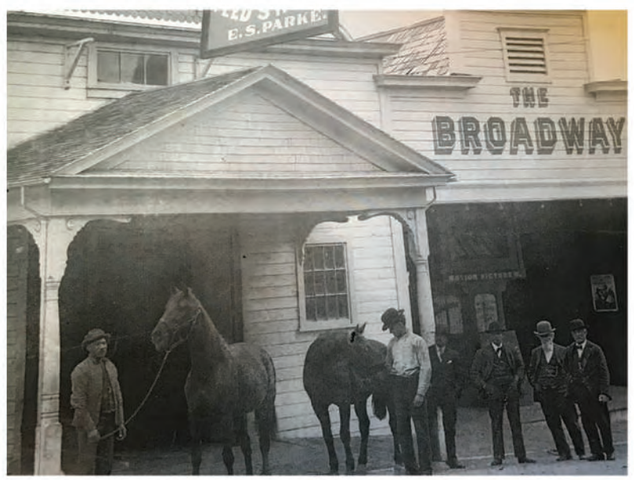

To Agenda

Ghost Signs : Hand-Painted Signs in History & Their Remains

Omaha, NE

In the early 1900's sign-painting was a fairly common job, and many sign-painters travelled for work. While most cities had their own sign shops, many smaller towns and rural areas depended on traveling artisans to do their sign-painting

We can see the chipped and faded remains of many of these signs today, often called "ghost signs", apparitions from a time before computers and vinyl letters. Because they had to be made on the spot, every sign was produced with a brush attached to a hand.

Many towns and cities are bringing the old signs back to life by documentation, preservation and restoration. And in recent years, sign-painting has experienced something of a revival on the fronts and walls of new businesses. There are now sign shops and collectives celebrating the craft.

There are remains of this craft not only in our community, county and state, but world-wide. These signs tell the forgotten pasts of cities and the show the craft of the pioneers that formed the places that we love.

Nevada City is a place of preservation and in a few places we can see the remenants of a lost artform. This seems to be a prime opportunity to demonstrate the community's commiment to it's historic ties and the support of it's local artists.

The Owl, Pine St. Nevada City

Virgina City, NV

Truckee, CA

Pine St. Nevada City

Ghost Signs on Historic Hotels

City of Nevada City

TO: Planning Commission

FROM: Amy Wolfson, City Planner

MEETING DATE: February 20, 2020

RE: Longitude Management LLC, Cannabis Distribution Business

ATTACHMENTS:

1. Redacted Application
2. Recommended Conditions of Approval
3. Zoning Verification Letter
4. Clarification Responses
5. SCI Checklist and Applicant Responses
6. Sate Fact Sheet – Distribution License

APPLICATION REVIEW: The subject application was timely submitted prior to the September 30, 2019 deadline. A redacted version of the application is attached to the staff report. Notification and an invitation to review and comment was sent to the Fire Chief, the Police Chief, the City Attorney, the City Engineer, the City Manager, the Environmental Health Department, the Building Department, and to the Planning Commissioners. SCI Consulting Group, the consulting firm contracted with the City to review cannabis applications, has provided a checklist review for compliance with local and State requirements, for which the applicant provided responses, attached. The applicant was asked to respond to staff requests for clarification, which are also attached to the staff report. Applicable agency comments have been incorporated into the conditions of approval. The application was originally scheduled to be heard at the December 19, 2019 meeting, but the applicant discovered some erroneous information was accidently inserted into their electronic version of the application, which has now been removed.

PROJECT PROPOSAL: Longitude Management, LLC is managed by Daniel Batchelor and Jonathan Hogander. This operation involves full distribution of cannabis product from any licensed business to another licensed business. They plan on also operating a "pre-roll machine" and "bio-shredder." Rolling pre-rolls involves rolling loose leaf or kief into paper. It appears that the State allows this type of activity to be conducted as part of a State Distribution license (see attached Fact Sheet). The City has no such exception to this type of activity, which otherwise aligns as "processing" under the cultivation business category. Therefore, staff is requesting that the Commission make a finding that the pre-roll and bio shredder services do not constitute a processing activity permitted only under the Cultivation category. The distribution activities will operate seven days a week from 8AM to 8PM.

The building manager has allocated six parking spaces to Longitude Management (22% of the 31 parking spots for the building). The applicant anticipates a maximum of 4 employees on site daily and one vendor at a time, utilizing five (5) spots at peak times. Future plans may include two dedicated distribution vehicles that will also be parked in this area. Staff has only minor concerns about the ability of the business to maintain off-street parking once the dedicated distribution vehicles are kept on-site. Staff is recommending in Condition of Approval A.7 that justification of parking

accommodation be submitted to the Planning Department with all annual renewals in order to evaluate the parking needs of the business after operation is underway and to evaluate parking needs as the business intensifies.

A Live Scan background check was previously conducted on Batchelor and Hogander in relation to their status with Elevation 2477, the City's cannabis dispensary located in the same building. No disqualifying information has been reported on the two principals pursuant to Section 9.22.090 (M) of the City Municipal Code. The facility will be video surveilled in accordance with their application and Section 9.22.090 of the City Municipal Code. The Police Chief or designee will conduct an inspection of the facility prior to the city's issuance of a cannabis business permit

LOCATION: The local ordinance allows cannabis manufacturing, distribution, testing laboratory, and cultivation businesses only in the Light Industrial (LI) zoning district subject to obtaining a permit pursuant to Chapter 9.22 of the City Municipal Code. The distribution business is proposed at 569 Searls Avenue, suite B, totaling 1,850 square feet. The property currently supports existing and pending cannabis business operations.

RECOMMENDED MOTIONS:

1) Make a Motion to find the project exempt pursuant to CEQA Guidelines Section 15301 (existing facilities) because the building is already existing and the proposed cannabis distribution business use is consistent with the principal permitted uses allowed in the Light Industrial Zoning District pursuant to Section 17.48.020, and there is no expansion of use beyond what is already considered a permitted use.

2) Make a Motion to approve the application as presented to authorize a cannabis business permit to Longitude Management, LLC for a distribution operation at 569 Searls Avenue, suite B subject to the recommended Conditions of Approval, attached, as may be modified by the planning commission, making findings "a" through "c":

   a) As presented and conditioned, there is no reasonable argument that approval of the application is likely to be detrimental to the city, taking into account any health, safety, and welfare impacts on the community.

   b) Finding that the application is consistent with Chapter 9.22 of the Nevada City Municipal Code.

   c) That the proposed pre-roll and bio shredder services do not constitute a processing activity permitted only under the "cultivation" category and are appropriate for offering as services under the "distribution" business category.

   OR

   Make a Motion to reject the application for a cannabis business permit to Longitude Management, LLC finding that the application is not consistent with Chapter 9.22 of the Nevada City Municipal Code.

   OR

   Make a Motion to continue the decision for authorization of a cannabis business permit to Longitude Management LLC with direction to the applicant regarding any inadequacies of their application that must be addressed.

LONGITUDE
MANAGEMENT

Prepared for Consideration by:
City of Nevada City | Nevada City, CA
Private & Confidential, September 2019

On Behalf of:
Longitude Management LLC
Cannabis Business Application
Address: 569 Searls Avenue, Suite B, Nevada City, CA 95959
Phone: [redacted]

To Agenda

City of Nevada City

Planning Department
317 Broad Street, Nevada City CA 95959

Phone: 530-265-2496
Email: Amy.Wolfson@NevadaCityCA.gov

Staff Use

Fee:$_____

Date Paid:_____

CANNABIS BUSINESS PERMIT APPLICATION FORM

(dispensary applicants, use other specific application form)

Please submit a minimum of **two (2) bound hard copies** and **one (1) digital copy** (usb drive, CD or email) of all application material.

Check business type being proposed. If multiple types are proposed, each type will need to be distinctly addressed in the supplemental documentation and on this form. A separate form may be submitted if it will help provide clarity.

____ Manufacturing

____ Cultivation

____ Testing Laboratory

_X__ Distribution

_N/A_ Dispensary (use separate form)

**** See attached definitions of the above categories to ensure appropriate selection***

Business Name: Longitude Management

Business Primary Contact: Daniel Batchelor

Contact Title: Chief Executive Officer

Contact's Mailing Address: [redacted]

Phone#: [redacted] **E-mail:** *Daniel@latitudemanagement.com*

24-Hour Contact Information: [redacted]

For details about the information required as part of the application process, please see the Implementation Procedures to Operate a Cannabis Business in Nevada City, Ordinance No. 2017-06 and additional requirements in order to complete the application process. All these documents can be found on the Nevada City webpage: www.NevadaCityCA.gov

To Agenda

Section A: Principal Background Information (Must be signed by all Principals)

(Add more pages as necessary to accommodate signatures of all Cannabis Business Principals.)

Under penalty of perjury, I acknowledge that I have personal knowledge of the information stated in this application and that the information contained herein is true. I also understand that the information provided in this application, except the Safety and Security Plan in Section C and certain confidential information such as driver's license and social security number, which can be redacted, may be public information and subject to disclosure under the California Public Records Act.

Principal Name: Daniel Batchelor

Principal Title: Chief Executive Officer

Principal Home or Cell Phone: [redacted]

Principal Home Address: [redacted]

Principal Signature:_____ Date: 9/30/19

Attachments:

____If business will operate as a collective/cooperative provide proof of status as a qualified patient or primary caregiver (State card or doctor recommendation)

____Receipt from Live Scan check

____Copy of Social Security Card

____Copy of Driver's License, OMV issued ID Card or Passport (must be a color copy)

____Proof of address (DMV-issued ID/driver's license, and/or recent utility bill under Principal's name)

Staff use only: Pass background check_____

****

Principal Name: Jonathan Hogander

Principal Title: Chief Financial Officer

Principal Home or Cell Phone: [redacted]

Principal Home Address: [redacted]

Principal Signature:_____ Date: 9/30/19

Attachments:

____If business will operate as a collective/cooperative provide proof of status as a qualified patient or primary caregiver (State card or doctor recommendation)

____Receipt from Live Scan check

____Copy of Social Security Card

____Copy of Driver's License, OMV issued ID Card or Passport

____Proof of address (DMV-issued ID/driver's license, and/or recent utility bill under Principal's name)

Staff use only: Pass background check_____

To Agenda

Principal/Partner History:

1. List whether, the applicant(s) has other licenses and/or permits issued to and/or revoked from the applicant, in the three years prior to the year of the permit application, such other licenses and or permits relating to similar business activities as in the permit application. If yes, please list the type, current status, issuing/denying for each license/permit. (Please attach a separate document explanation if necessary)

Currently both principals are also principals for the licensed and operating Nevada City dispensary, Elevation 2477'.

Please see Section 3 'Management Team Experience and Expertise' of the Business Plan for additional information

2. List any and all partners who have been found guilty of a violent felony, a felony or misdemeanor involving fraud, deceit, embezzlement, or moral turpitude, or the illegal use, possession, transportation, distribution or similar activities related to controlled substances, as defined in the Federal Controlled Substance Act, with the exception of cannabis related offenses for which the conviction occurred after the passage of the Compassionate Use Act of 1996. (Please attach a separate document explanation if necessary)

Not Applicable

Section B: Business Organization Status

1. Describe the Cannabis Business organizational status:

Longitude Management is set up as an Limited Liability Corporation

☐ Attach proof of status, such as articles of incorporation, by-laws, partnership agreements, and other documentation as may be appropriate or required by the City.

Section C: Cannabis Business Description and Location

1. Statement of Purpose of Cannabis Business (a separate sheet may be attached, labeled Section C.1):

Longitude Management proposes to be a distribution facility focusing on assisting Nevada County cultivators and manufacturers reach the consumer market. Located in the 569 Searls Ave complex alongside several other permitted cannabis businesses, we will focus on distribution throughout the complex.

To Agenda

2. Proposed Location of Business: 569 Searls Ave, Suite B, Nevada City, CA 95959

APN: 005-280-018-00

3. Name and address of property owner: NC Acquisitions 569

1253 University Ave, Suite 1002

San Diego, CA 92103

4. Name and address of school(s) and/or public park(s) closest to Proposed Location:

Deer Creek Elementary ~ 1234' away from proposed location ~ 805 Lindley Ave, Nevada City 95959

Pioneer Park ~ 3423' away from proposed location ~ 104 New Mohawk Rd, Nevada City 95959

5. Have you received a Zoning Verification Letter? (Please check the appropriate response)
Yes_____(If yes, include documentation with this section of the application) No__X__

Amy Wolfson to submit with packet. Elevation 2477' (same building) currently submitted. Please see attached email

6. Description of neighborhood around the proposed location surrounding uses, nearby sensitive uses (such as schools, churches, parks, daycares, or residents), transit access to site, etc. A separate sheet may be attached and labeled Section C.6.

Suite B of 569 Searls Ave is already located in the Searls Avenue Cannabis Campus. All businesses located in the building are permitted Cannabis businesses. There are no sensitive uses within 1,000 ft of the premise. The parcel is zoned Light Industrial - Scenic Corridor and all surrounding businesses are commercial.

Please see 'Proposed Location' section of application for additional information

7. Site plan must be dimensioned and show the entire parcel including parking and additional structures [recommended scale of **1"= 20'**]. In addition, please attach elevations and photos of proposed location. If any exterior alterations are proposed for the existing building, also attach a *proposed* site plan that is accurate, dimensioned and to-scale for each potential location and include elevation details. The scale should accommodate an accurate site plan on a sheet of paper no larger than 11X17.

8. Floor Plans shall be attached and shall be accurate, dimensioned and to-scale [recommended scale of **1/4"= 1'**] for each potential location. If any interior alterations are proposed for the existing building, also attach *proposed* floor plans. The scale should accommodate an accurate floor plan on a sheet of paper no larger than 11X17.

9. Signage Plan.

10. Vicinity Map.

11. Photos of the site and building(s).

Section D: Required supplemental information

This information is required for this application to be considered complete. Attach the following reports to the application.

- ☐ **Business and Parking Plan**
- ☐ **Neighborhood Compatibility Plan**
- ☐ **Safety and Security Plan**
- ☐ **Environmental Benefits (Water/Energy Efficiency Measures)**
- ☐ **Community Benefits**
- ☐ **Labor and Employment**
- ☐ **Local Enterprise**
- ☐ **Qualifications of Principals**

STAFF USE ONLY:

Date of initial application:_____

File Number assigned to application:

_____

Date fee received _____

Date application reviewed for completeness:

_____

☐ Complete ☐ Incomplete

Date Proof of ownership was verified or a signed and notarized statement from the property owner was received

_____

Date application reviewed by Planning Commission:_____

☐ Approved ☐ Denied

Pertinent Cannabis Definitions pursuant to the Nevada City Municipal Code

"Cultivation" means any activity, whether occurring indoors or outdoors, involving the propagation, planting, growing, harvesting, drying, curing, grading, and/or trimming of cannabis plants or any part thereof for any purpose, including medical marijuana.

"Dispensary" means a cannabis business facility where cannabis, cannabis products, or devices for the use of cannabis or cannabis products are offered, either individually or in any combination, for retail sale, including an establishment (whether fixed or mobile) that delivers, pursuant to express authorization, cannabis and cannabis products as part of a retail sale.

“Distribution” means the procurement, sale, and transport, of cannabis or cannabis products between entities licensed pursuant to the MCRSA and any subsequent State of California legislation regarding the same.

"Manufacturer" means a person that conducts the production, preparation, propagation, or compounding of manufactured cannabis, as defined in this section, or cannabis products either directly or indirectly or by extraction methods, or independently by means of chemical synthesis at a fixed location that packages or repackages cannabis or cannabis products or labels or relabels its container.

"Testing laboratory" means a facility, entity, or site that offers or performs tests of cannabis or cannabis products and that is both of the following:

(1) Accredited by an accrediting body that is independent from all other persons involved in the cannabis industry in the state.

(2) Registered with the State Department of Public Health.

To Agenda

PROPOSED LOCATION

LONGITUDE DISTRIBUTION

To Agenda

Nevada County, CA

LML-D-10

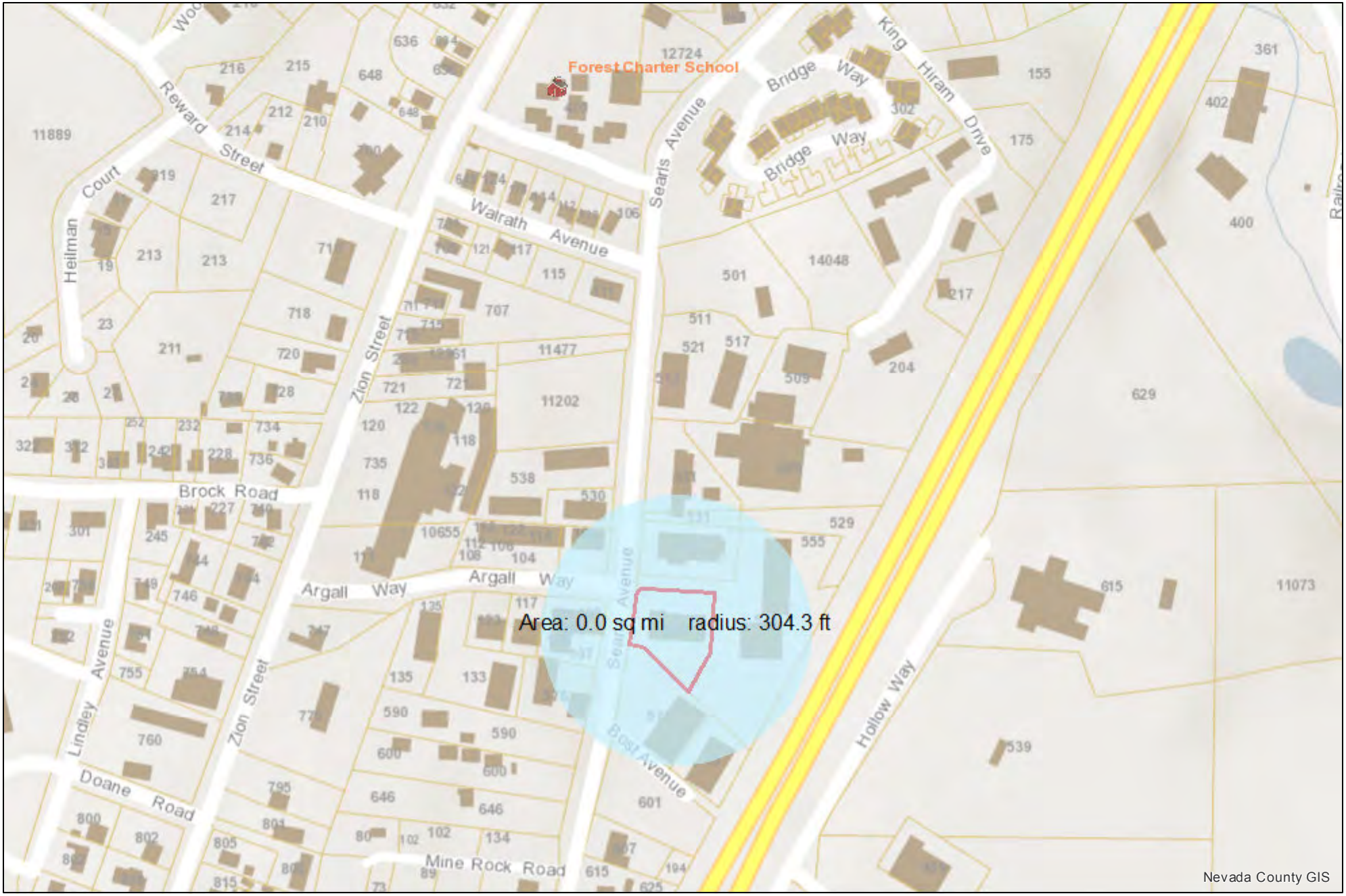

September 18, 2019

1:4,514

0 0.0375 0.075 0.15 mi

0 0.05 0.1 0.2 km

Nevada County GIS
©2018

569 Searls- Schools and Parks

Parks- 600'

Public Schools 600'

Private Schools - 600'

Subject Parcel - 569 Searls

Nevada County Parcels

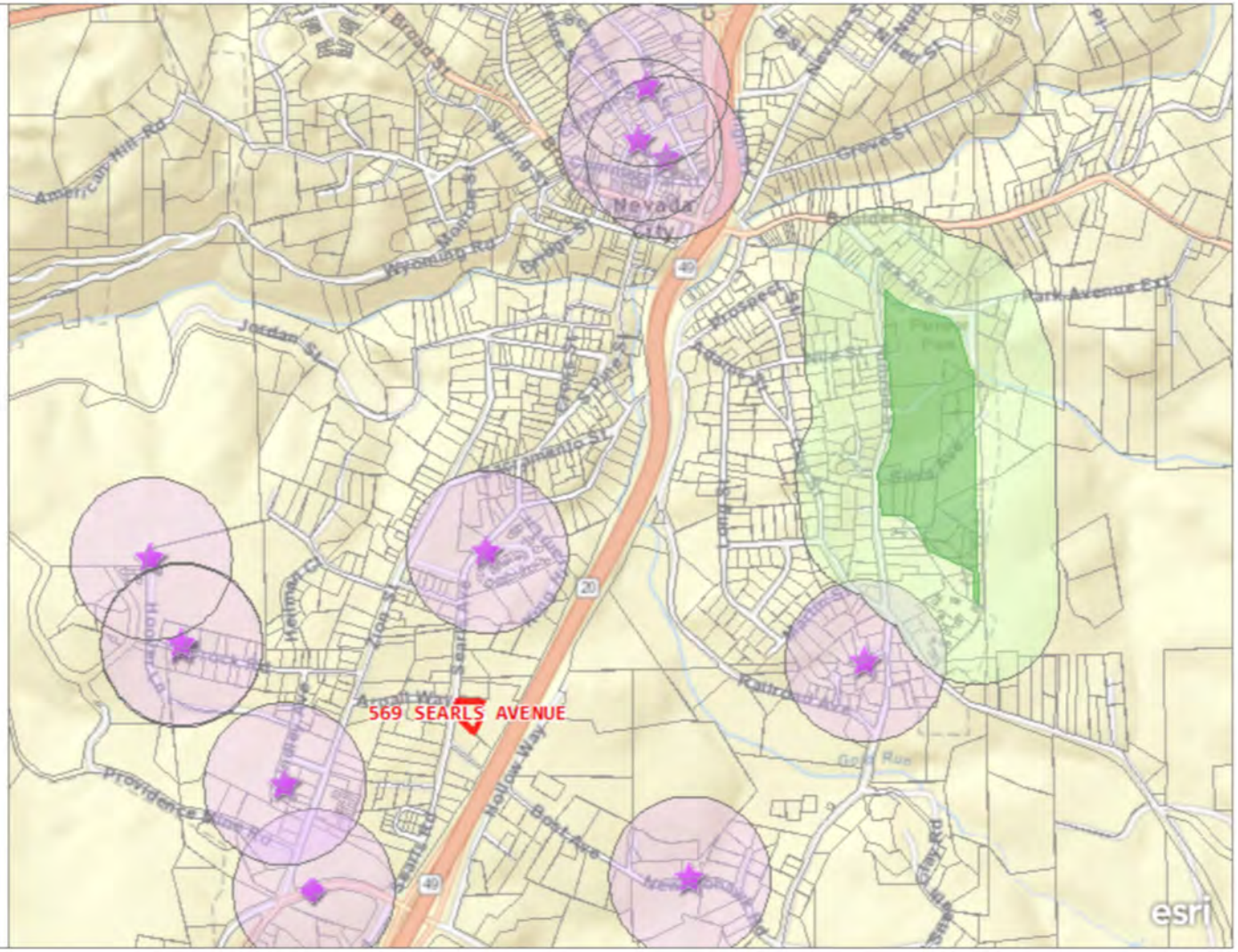

0.4mi

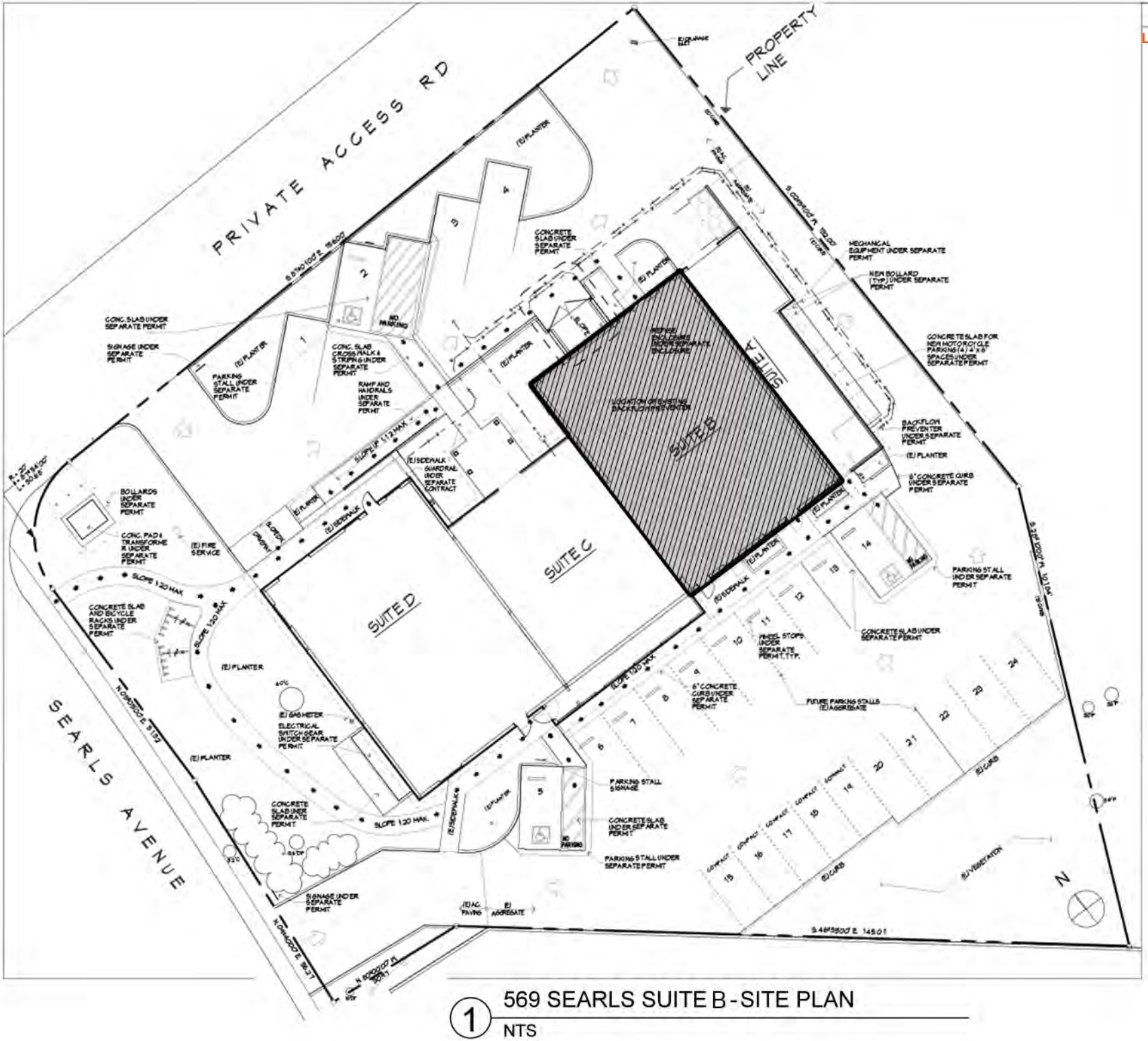

1 569 SEARLS SUITE B - SITE PLAN

NTS

569 Searls Ave. Nevada City, CA 95959

LML-D-13

Map 1 - Sensitive Use Map

City of Nevada City

August 23, 2017

Daniele Bachelor
[redacted]

Subject: **Nevada City Medical Cannabis Dispensary Business Zoning Verification Letter; 569 Searls Avenue**

Dear applicant:

This letter shall serve as verification that property located at 569 Searls Avenue, Nevada City, CA meets local setback and locational requirements in terms of zoning and proximity limits to operate a Medical Cannabis Dispensary (MCD) business. The subject property, located at 569 Searls Avenue is located within the "Light Industrial-Scenic Corridor" (LI-SC) zoning district and is located at least 600 feet from any known school site or public park site as determined using the City's GIS measuring tool. While this proximity determination will suffice for local verification purposes, this Zoning Verification letter does not constitute verification of compliance with State locational requirements.

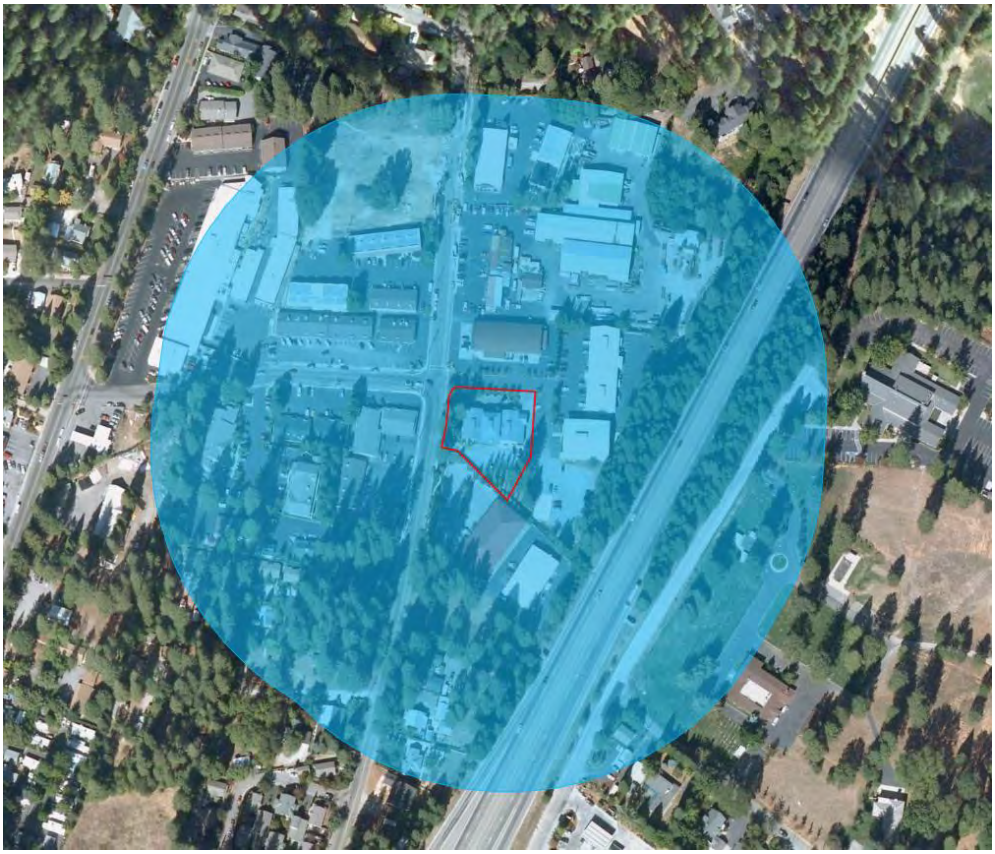

Subject property boundary *600-foot buffer area*

City Hall · 317 Broad Street · Nevada City, California 95959 · (530) 265-2496

To Agenda

Please note that the issuance of a "Zoning Verification Letter" does not constitute written evidence of any kind of permission being given by the City of Nevada City, and it does not convey any right to operate a MCD in the City. Final decisions on the issuance of permits will be made by the City Council following the approved application procedure process.

Sincerely,

Amy Wolfson
City Planner
(530) 265-2496 x130

LML-D-17

FIT FOR LIFE
PHYSICAL THERAPY

To Agenda

Longitude Management LLC
Distribution Facility
Proposed Location

Longitude Management LLC is located at 569 Searls Avenue, Suite B, Nevada City, CA 95959. The facility occupies 1,850 square feet of the 8,250-square-foot building on a Light Industrial - Scenic Corridor (LI-SC) zoned parcel.

APN: 005-280-018-00

Longitude Management LLC holds a lease on the facility for 5 years with the option to renew. As a distribution company, Longitude Management is well positioned in the Searls Avenue Cannabis Campus to achieve its mission of collaborating with other local cannabis businesses to bring local products to the shelves of Elevation 2477' and other retailers in the region who share our passion for small, craft cannabis farmers.

Longitude Management LLC was formed by the same team who brought Elevation 2477' to Nevada County with the goal of providing local farmers an opportunity to move their products directly to our shelves through exceptional branding and tested logistics. The goal of our team has always been to support the local cannabis industry and while we see many product makers being established in Nevada City, local farmers have been left with few distribution channels to bring their products to market. As with any of our other businesses, our employees will be exceptionally trained and qualified to handle the wide range of safety and security protocol for this developing industry.

Longitude Management's facility is well positioned for the proposed and it matches the city's idea of a secure and well-managed cannabis business center. The entire campus is located over a 1,000 feet from any sensitive use outlined by Nevada City. Our goal is to convert a portion of the existing building into a facility that will be compliant with local and state regulations and respect the integrity, cultural and historical values of our town.
The building will be shared with like minded businesses including several proposed cannabis businesses and the existing dispensary, Elevation

2477', the first permitted cannabis business in Nevada County that has already proven to be a good neighbor to the 7 Hills Business District and a responsible role model for the local regulated cannabis industry.

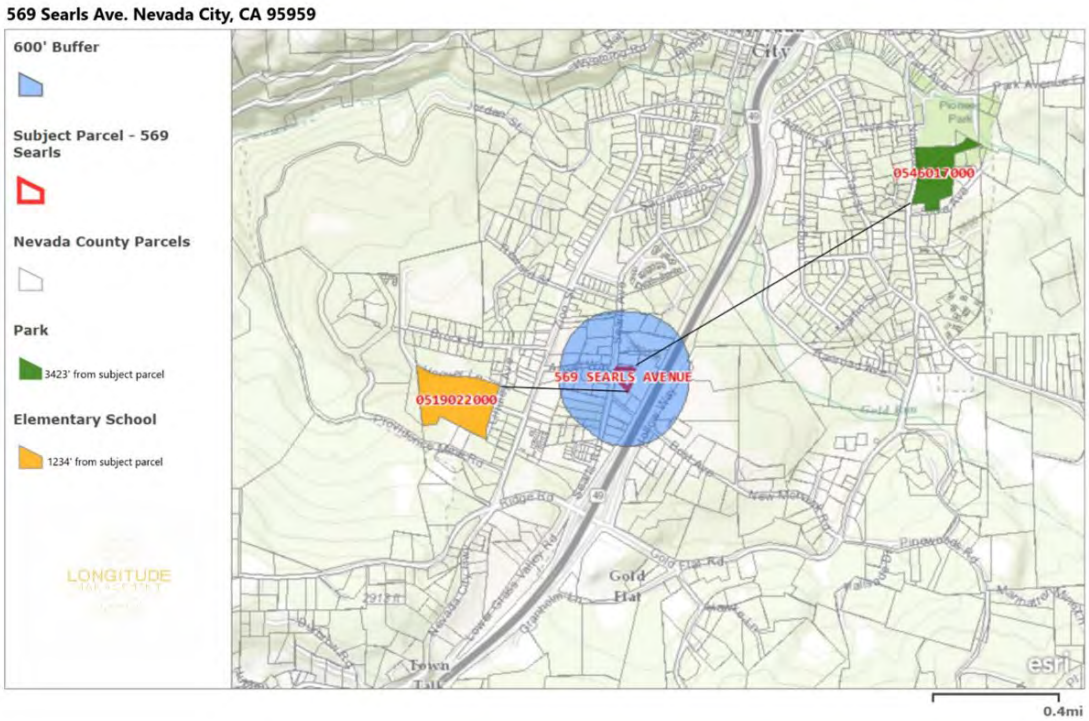

Map 1 - Sensitive Use Map

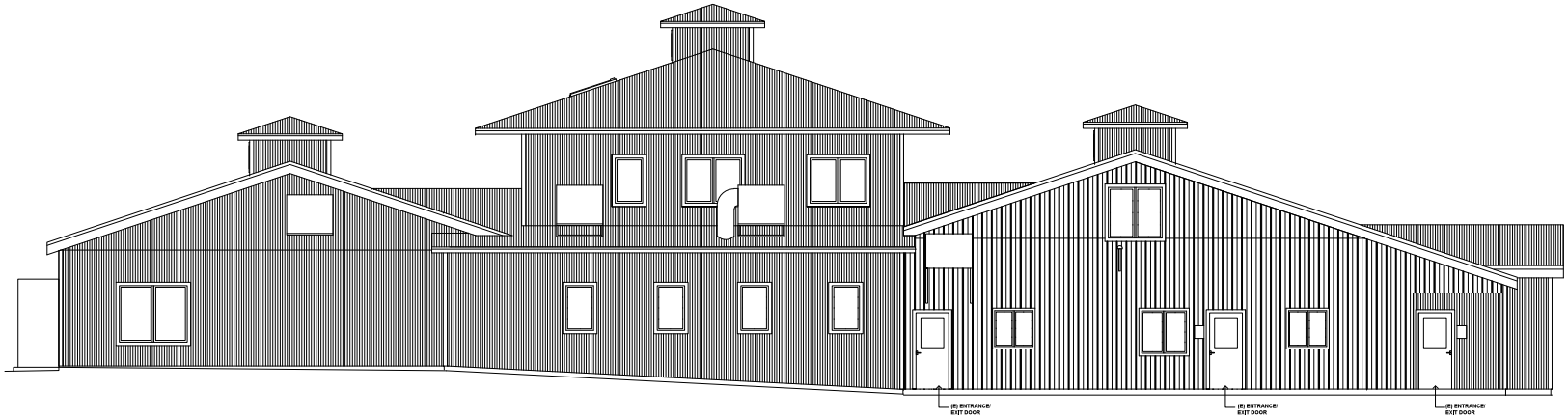

3 569 SEARLS SUITE B-SOUTH ELEVATION

Scale 1/16" = 1'-0"

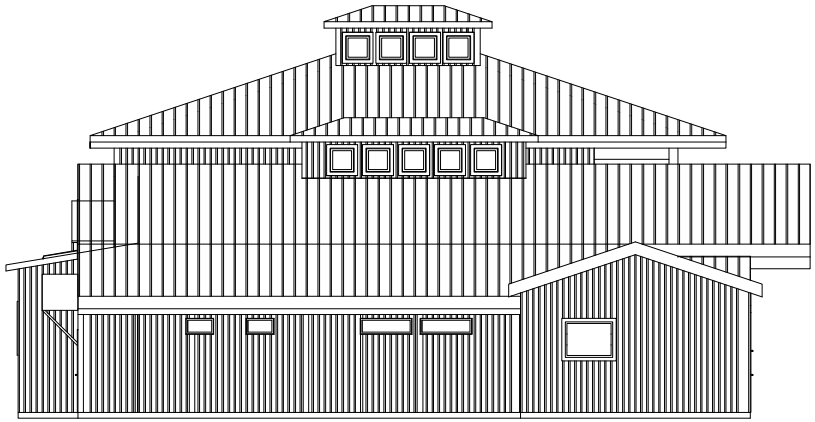

2 569 SEARLS SUITE B-EAST ELEVATION

NTS

1 569 SEARLS SUITE B-NORTH ELEVATION

Scale 1/16" = 1'-0"

To Agenda

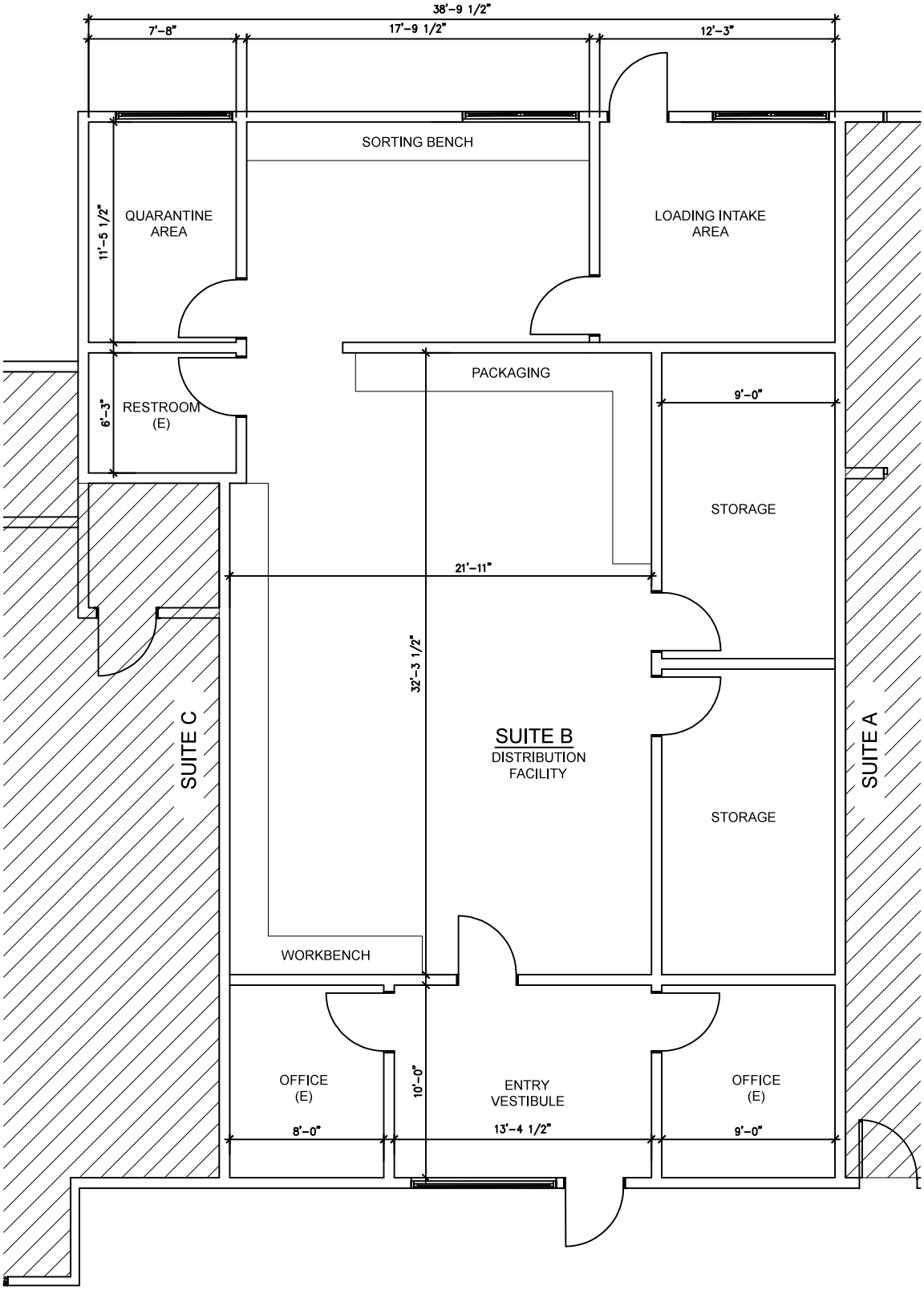

1 SUITE B PROPOSED FLOOR PLAN - DISTRIBUTION

Scale 1/8" = 1'-0"

N

BUSINESS AND PARKING PLAN

LONGITUDE DISTRIBUTION

To Agenda

Longitude Management LLC

Business and Parking Plan

569 Searls Ave, Suite B
Nevada City, CA 95959

A Cannabis Distribution Facility

To Agenda

Table Of Contents

1. Executive Summary
2. Objectives
    a. Overview
    b. Mission Statement
    c. Vision Statement
    d. Philosophy
    e. Core Values
    f. Our Brand
3. Management Team Experience and Expertise
    a. Corporate Officers and Board of Directors
    b. Management Team
    c. Advisors
    d. Partnerships and Associates
4. Day to Day Operations
    a. Hours of Operation
    b. Grounds Management
    c. Security
    d. Odor Mitigation
    e. Distribution Operations
    f. Supplier Relationships
    g. Product Handling
    h. Lab Testing and Quality
    i. Storage and Inventory
    j. Packaging and Labeling
    k. Product Complaints
    l. Weights and Measures
    m. Waste Management
    n. Diversion Prevention
    o. Good Neighbor Policy
5. Product List
6. Local and State Law Compliance
    a. Compliance with Ordinance 2018-10
    b. Compliance with California State Laws
    c. Tax Compliance
    d. Tax Remittance

7. Track and Trace System
    a. Functionality of Seed to Sale software
    b. Responsible Employee
    c. Initial Inventory
    d. Monthly Inventory Protocol
    e. Random Physical Inventory Checks
    f. Annual Inventory
    g. Cannabis Waste Tracking and Notices
    h. Data Storage
8. Timeline
    a. Timeline of Proposed Construction
    b. ADA Compliance
9. Target Market Analysis
    a. Area of Influence
    b. Economics and need in the Market Place
    c. Market trends and Development
    d. Branch Differentiation and Value Proposition: Our Competitive Advantage
10. Marketing Plan
11. Financial Projections
12. Parking Plan

To Agenda

1. Executive Summary

Longitude Management LLC is a cannabis distribution company seeking to operate under California State and local Nevada City laws as a limited liability company. We are seeking to obtain a cannabis distribution license under Nevada City ordinance number 2018-10 adopted by city council on December 12th, 2018 and section 26070.5 of the California Senate Bill number 94, most commonly known as the Medical and Adult Use Cannabis Regulation and Safety Act ("MAUCRSA"). A licensed distributor shall distribute only cannabis goods, cannabis accessories, and licensees' branded merchandise or promotional materials. Subsequent to the issuance of our municipal license Longitude Management LLC intends to specifically apply for and be granted a Type 11: Distributor license under "MAUCRSA" which currently has an open application process.

Entity Structure: Limited Liability Company
State Organized: California
State Filing Number: Currently Pending, Submission ID WQV-BKJR
Entity Type: Limited Liability Company
Federal Tax ID Number (EIN): Redacted for security reasons, provided upon request
State License Type (seeking): Type 11: Distributor governed by the Bureau of Cannabis Control.
Corporate Officers/Board of Directors:

- Daniel Batchelor, Chief Executive Officer, *Grass Valley, CA*
- Jonathan Hogander, Chief Financial Officer, *Grass Valley, CA*

2. Objectives

a. Overview:

Longitude Management's main objective is to source local and fully-licensed cannabis products, including flower and locally-made products for distribution to affiliate retailers such as Elevation 2477' and our network of trusted and licensed manufacturers and distribution companies in the region.

Longitude Management aims to serve as the vehicle through which local permitted farmers in the region get their products to our local shelves, allowing the emerging local cannabis industry to flourish while infusing the local economy. As successful retailers, our principals have gained comprehensive knowledge about the market forces governing the burgeoning cannabis

industry and are well-positioned to work with regional local farmers to successfully get them to market.

The main functions of Longitude Management include distribution of local flower to the local retailer, local manufacturers and eventually expanding into the Northern California region to establish Nevada County as an important producer of small, craft cannabis.

As part of our distribution activities, Longitude Management will perform the following services: Transportation, inventory control, quality assurance through local testing laboratories, tax remittance, supply-chain management, order fulfillment, packaging, and labeling.

Maintaining the vision of the principals' retail business, Longitude Management was built as much with the idea of generating greater access for clients and adult consumers as it is about creating brand assistance and recognition for Nevada County cannabis products that embody the ethos of small-batch artisanship. Through thorough knowledge of local and state regulations, as well as a deep understanding of cannabis consumer behavior, we wish to enable local farmers who are seeking safe and legal means of distributing locally grown and manufactured cannabis to thrive while being responsible operators.

It is our belief that cannabis distribution and manufacturing can provide safe and legal access to adults who are seeking cannabis for consumption, while keeping cannabis off the streets and out of the hands of youth by decreasing the need for illegal sales. We continue to be Nevada County locals with the community's best interest at heart.

We know Nevada City patrons are savvy, and municipal stakeholders will only allow the finest of establishments to serve its community. As with the principals' retail operations, employees will be exceptionally trained and qualified to handle the wide range of services we will be providing.

We recognize the challenging and ever-evolving regulatory environment our organization will operate in and therefore have established a diverse team to fulfill the community's vision and properly manage this endeavor.

b. Mission Statement:

Our commitment is to facilitate locally grown, first-class products to dispensaries around the state of California. We will assure our clients clean, safe, and tested, locally grown cannabis from specialty purveyors. We will have a POS and Metrc track-and-trace system that will enable us to manage one-on-one relationships with our suppliers, manufacturers and retailers while keeping the most up-to-date records of our sales as well as our inventory. This will allow for complete transparency for Nevada City and State officials upon request.

Our mission remains creating avenues that empower the people to make choices about what brings them relief and wellness as well as create jobs and boost the local economy -- all while upholding the community values that make Nevada City a great place to call home.

c. Vision Statement:

Our Principals and core team are a dedicated group that seeks to continue to establish a local ecosystem of independent cannabis businesses that support and encourage each other to thrive while destimagatizing cannabis as a cannabis and as a lifestyle choice.

d. Philosophy:

Community strength is the basis to quality of life. By assisting our local cultivators and manufacturers to reach the statewide market we intend to enhance the economic vitality of the region.

Through a well strategized marketing plan that includes appellation of origin designation and sophisticated branding, Longitude Management aims to connect suppliers and discerning consumers, opening a greater space for the statewide cannabis market to learn about the local artisanal passion that fuels our community, making the region as well as our local cannabis bounty stand out.

e. Core Values:

- **Knowledge and Integrity**: We strive to be in alignment with our community's highest standards of integrity, from the products we distribute to our commitment to community betterment. Our goal is to maintain a limitless outlook and never stop learning. Cannabis science education and industry knowledge is at the core of our mission.
- **Quality and Service**: We shall provide the highest quality and safest cannabis products available in our region, along with the most knowledgeable team to help our clients make the best decisions for their consumers. Consistent with the regulatory framework outlined by the Bureau of Cannabis Control (BCC), Longitude Management will only procure legal cannabis products from licensed cannabis cultivators, manufactures and other distribution centers, ensuring the contents are safe for consumption and meet strict testing criteria established by the state.
- **Community Engagement:** Our goal is to be a role model in the industry and community. We are already good citizens in the communities in which we live and work. We strive to work with local farmers, manufacturers and organizations that believe in building a better Nevada City. We will continue to locally sourced services and products related to the upkeep of the facility as well as inventory on our shelves.
- **Personal and Entrepreneurial Accountability**: As business owners and members of the community, we believe our success is everyone's success story. We will act in

compliance and know the state and local laws. We have a fiduciary responsibility to those that rely on our organization and a moral obligation to the farmers who are our neighbors. Longitude Management was founded with a spirit of collaboration among permitted cannabis business in the area to foment greater economic benefits for the local industry as well as the community at large.

- **Safety First**: Be vigilant and prepared. We operate in a highly regulated environment and safety and security are paramount. We will continue to update and follow security and safety procedures throughout the continued operation of the distribution center and to work with local agencies to ensure our family of businesses remain responsible good corporate citizens.
- **Commitment to public health and safety.** We worked with the highest standards of cannabis products and provide information for all products in our inventory --from cannabinoid content to certificate of analysis-- as required by state regulations. We will be working with local testing lab to ensure quality and will employ marketing and branding geared to a discerning medical and adult-use market, as well as child-resistant packaging and labeling standards designed to protect public health and safety.

f. Our Brand

We chose the name Longitude Management LLC for several reasons:

- In keeping with our commitment to highlighting the region and its bounty, Longitude Management, its sister company Elevation 2477' and Latitude Management, its compliance consulting arm, collectively aim to put Nevada County on the map as an important producer of craft cannabis -- boosting local cannabis tax revenue and adding to the marketing of our region as a great place to visit.
- The California coast is 840 miles long and only 250 miles wide. It is the longest state in the nation and stretches along two degrees of Longitude and we would like our products to span the entire length of the state.
- The Sierra Foothills also run parallel to the state and the Longitude Management brand was created to draw attention to appellations and the variety of cannabis products that come out of the different local regions. We believe the stunning beauty of our region plays a part in our community's quality of life and we wanted to pay homage to the variance of attributes -- mountains, rivers, historic towns -- created by minor changes in a cultivator's Longitude along the Sierra Foothills.

3. Management Team Experience and Expertise

Our team consists of professionals with vast organizational management and development skills, coupled with expert knowledge to best implement the goals and principles of Longitude Management LLC. Our team has been at the forefront of developing a responsible and compliant local cannabis industry and actively participate in advocating for policy that allows

the heritage cannabis farmers and product makers to enter the regulated marketplace. This time of hands-on expertise enables the organization to keep up with cutting-edge solutions and the most up-to-date operations and procedures. Our Directors will oversee the operations, manage cash flow, and monitor key indicators of performance on a daily basis.

Corporate Officers and Board of Directors:

- **Daniel Batchelor, Chief Executive Officer,** *Grass Valley, CA* : With a background in business development and consulting, and a successful track record as CEO of Elevation 2477', Daniel is positioned to expand into his own distribution facility. Daniel has been a local resident since 1991, when his family moved to the area from Santa Cruz. Since attending San Diego State University, Daniel has gained extensive knowledge of the cannabis industry in California, first by opening his own dispensary in the San Diego area in 2009, and then successfully winning the only dispensary license in Nevada City. Since opening the doors of Elevation 2477' in August 2018, Daniel has been able to build important relationships with statewide product makers, farmers and distribution companies, gaining him the unique knowledge to successfully broker relationships between consumers and cannabis product providers that benefit both parties. He continues to be involved in the development of local cannabis policy as Executive Board member of the Nevada County Cannabis Alliance and actively participates in the local philanthropic community. His love for Nevada County led him to get involved with local organizations such as the Nevada City Chamber of Commerce.

- **Jonathan Hogander, Chief Financial Officer/Chief Operating Officer,** *Auburn, CA* : Jonathan Hogander will be acting as CFO/COO for Longitude Management LLC as well as CFO for Elevation 2477. Jonathan has long been apart of the cannabis community, as a client since 2002, and as an activist and advocate for cannabis rights. Jonathan has resided in Nevada County since 2013, when he was in search of a school for his daughters that was in alignment with his idea of a balanced early childhood education. After finding the Live Oak Waldorf School in Meadow Vista he discovered Grass Valley and made it his home with his wife and three daughters. Jonathan has extensive and recreational dispensary knowledge and experience. Currently his companies hold 10 Oregon Liquor Control Commission (OLCC) Licensed Marijuana Retail Licenses; four (4) OLCC Licensed Marijuana Producer Licenses, and a Wholesale license. Additionally, Jonathan recently received the first Type 7 Volatile Manufacturer license in the City of Davis, California and is acting CEO/President for Blessed Extracts along with a Type 11 Distribution license. As a current cannabis business operator, Jonathan has gained extensive knowledge of Franwell Metrc Cannabis Tracking System (CTS), which is used for seed-to-sale tracking of cannabis products in Oregon and is currently using metrc in

California at both Blessed Extracts and Elevation 2477. His educational background includes a degree from Cal Poly – San Luis Obispo in mechanical engineering in 2008 (magna cum laude). Before Jonathan's cannabis business career he had experience working as a senior mechanical design engineer and product manager in several companies including Microsoft and Sony Electronics.

a. Management Team

- **Maria Herrera, Operations Consultant,** *Nevada City, CA*: Maria has played an important role in the creation of our affiliate business, Elevation 2477'. As an industry consultant who has led project management roles locally and in the Sacramento Area, Maria is knowledgeable in cannabis licensing and permitting as well as in the development of standard operating procedures for cannabis businesses. In addition, Maria is proficient as a business development consultant identifying the tools needed for businesses of any kind to be successful and thrive. She is a former journalist with 12 years of experience covering local and state politics. Maria will stay on board to develop the team that will lead Longitude Distribution into a successful business venture.

- **Menkin Nelson, Assistant Manager,** *Nevada City, CA* : A transplant from Humboldt who spent several years cultivating and assisting farmers with the cultivation application process, Menkin is adept at understanding local and state regulations and putting them into a system that works for developing cannabis businesses and farmers alike. Prior to Cannabis Menkin worked as a yacht captain for decades, running vessels around the world. The carryover of running a boat is much like a fledgling cannabis business with ever changing regulations, as you transit across borders, to training staff in safety procedures, security procedures and inventory systems. While on the water your inventory, safety and security are paramount to survival. Menkin will bring the same regimented consistency and crew management skills to the distribution facility. Her love for the Sierra Foothills has made this the final destination in her travels and the developing cannabis economy in her backyard has pulled at her drive and heart strings.

b. Advisors

i. Legal Team:

1. **Kathryn McCall**: Kathryn McCall has twenty years of corporate governance and transactional experience. She focuses on helping emerging growth companies and small businesses succeed. Her clients appreciate her pragmatic and strategic advice regarding their entity formation, financing, and operational concerns. As outside general counsel for many of her clients, Ms. McCall has counseled C-Level Officers and Boards of Directors on corporate governance, debt and

equity financings, strategic alliances, mergers & acquisitions, technology transactions, joint ventures, commercial agreements (e.g. distribution, licensing, software-as-a service, development services, offer letters and employment agreements, master services agreements), equity incentive plans, and securities filings. She has also negotiated preferred stock financings on behalf of angel and seed investors and venture capital funds. Some of the industries in which Ms. McCall has provided legal counsel include: cannabis, media; technology; internet of things; education; internet-based products, services and applications; consumer products; retail; publishing; and health and fitness.

2. **Cameron Brady**: Cameron Brady is a fourth-generation Nevada County resident, as well as a seasoned litigation counsel in the Bay Area and the Sierra Foothills. He has represented businesses, including cannabis businesses in real estate transactions, entity formation, labor and employment matters. Cameron is also a board member of KVMR and an active member of the philanthropic community in Nevada County.

ii. CPA Advisor:

1. **Diane Piccioni**. Diane is a self Employed CPA, specializing in both Tax and Accounting services for individual and business entities. Over 30 years experience in preparing 1040 individual, 1120 Corporate, 1065 Partnership, 1041 Trust and 706 Estate tax returns. Experience in representing clients before I.R.S. also provides consultation for setting up client's using Quickbooks.

c. Partnerships and Associations

i. **Elevation 2477'**: As our first permitted cannabis business, maintaining a healthy local inventory on the shelves of Elevation 2477' will be our main priority. However, our plan is to extend the offering from our premier dispensary to other retailers. Longitude Management and Elevation 2477' aim to create brand recognition for Nevada County as an important produce of craft products throughout the Northern California region.

ii. **Nevada County Cannabis Alliance**: Daniel Batchelor currently serves on the board of the Alliance. As part of our commitment to support the development of a local responsible cannabis industry, Longitude Manager will become a participating of the organization and contribute to is advocacy and education efforts.

iii. **Higher Commitment**: Longitude Management hopes to partner with our local testing laboratory for all the certificate of analysis required for any cannabis products that would get distributed through our facility.

iv. **Thrive Society:** The success of other local cannabis businesses is our success as well. Longitude Management will partner with already established Thrive Society to bring licensing agreement and contract manufacturing agreements for brands looking for local fulfillment.

v. **Blessed Extracts**: Our principles continue to manage one of the first Type 7 manufacturing facilities in the state and will provide Longitude Management the opportunity to produce high quality products with raw materials sourced locally.

4. Day to Day Operations

The Longitude Management LLC team has a wealth of experience in operating cannabis businesses in compliance with State and local law in California. Our Standard Operating Procedures ensure that all staff understands what is expected of them at every level and is adequately trained to comply with all expectations, regulations and protocol.

a. **Hours of Operation:** Longitude Management LLC will only operate within the hours specified in the business's cannabis business permit and will not negatively impact our surrounding community in any way.

b. **Grounds management**: Longitude Management LLC will not permit loitering by persons outside the facility both on the premises and within fifty (50) feet of the premises of the business. Cannabis shall not be consumed on the premises. Signage to these effects, and conforming to the requirements of the Nevada City Municipal Code, shall be posted visibly throughout the premise. In addition, Longitude Management will contribute to Elevation 2477' security protocols and add the number of perimeter checks security guards already perform on the property throughout the day.

c. **Security:** Our security plan, included in this application, include security surveillance cameras, security video recording and retention, an alarm system, on staff security guards and regular walking of the premise grounds for first hand visual inspections.

d. **Odor Mitigation:** Odor control devices and techniques shall be incorporated to ensure that odors from cannabis are not detectable off-site. We shall provide a sufficient odor absorbing ventilation and exhaust system so that odor generated inside the distribution facility is not detected outside anywhere on adjacent property or public rights-of-way, on or about the exterior or interior common area walkways, hallways, breezeways, foyers, lobby areas, or any other areas available for use by common tenants or the

visiting public, or within any other unit located inside the same building as the cannabis business. As such, we shall install and maintain the following equipment, or any other equipment which the City Manager or his/her designee(s) determine is a more effective method or technology:

1. An exhaust air filtration system with odor control that prevents internal odors from being emitted externally. Please see the neighborhood compatibility plan that details how the system has been designed to achieve the above standard based on the specific building size and layout;

2. An air system that creates negative air pressure between Longitude Management LLC's interior and exterior, so that the odors generated inside the are not detectable on the outside of the building. Please see the neighborhood compatibility plan that details how the system has been designed to achieve the above standard based on the specific building size and layout

e. **Distribution Operations:** Longitude Management LLC will be engaging in the procurement, sales and transportation of cannabis or cannabis products between entities licensed pursuant the MAUSCRA and all subsequent State of California legislation regarding the same. We will only purchase cannabis from local and state licensed cultivators or cannabis products from state and local licensed manufacturers for resale at licensed dispensaries.

f. Supplier Relationships: Our principles and management team have a proven record of helping and educating farmers on how to properly and effectively submit a cannabis business permit applications, and as such have established trust among local cultivators, some of who have already been able to place permitted and licensed cannabis flower on the shelves of Elevation 2477'. Our mission is to continue to grow those relationships to constantly supply local consumers with local product.

g. Product Handling

Transportation: Longitude Management employees will utilize proven and compliant transportation procedures to procure licensed cannabis and cannabis products from its suppliers as follows:

- All Longitude Management Vehicles will have a valid Motor Carrier Permit and be equipped with an alarm system, as per state regulations, similar to Elevation 2477's delivery fleet.
- Transportation of cannabis and cannabis products shall only be conducted by Longitude Management employees. As with Elevation 2477' delivery services and shipping and receiving protocols, the

following details will be utilized when shipping/receiving and transporting:

a. No other persons will be allowed in the vehicle at any time.
b. Products will be transported inside a locked box or cage affixed securely to the frame of the vehicle, and will not be visible from outside the vehicle.
c. Vehicles used for transportation of cannabis will not be branded with any cannabis identification or logos, and will be equipped with a GPS system or other technology for tracking its whereabouts in real time. This information is kept for 90 days.

Shipping and Receiving: Longitude Management will receive products in accordance with all local and state regulations. The team will work with neighboring cannabis businesses to install a gate on the north side of the business preventing vehicles that are not delivering cannabis goods to Suites A, B,C and D from entering the small parking area. In addition to employing safety and security protocols, Longitude Management will do the following to receive and ship products:

- All shipping arrivals will need to be pre scheduled. Drivers are to text or call Longitude Management team when they leave their facility.
- When a driver arrives at the building they will ring the bell so the parking gate opens. Shared security guards with Elevation 2477' will be notified so they can do a perimeter check during the transaction.
- Once at Suite B, drivers must present government-issued identification and employee badge.
- Goods will be unloaded or loaded, in the case of delivery drivers picking up product, onto the designated receiving area by facility personnel.
- Once cannabis products arrive at the facility, employees will complete an electronic shipping manifest as prescribed by the licensing authority. The shipping manifest will include the unique identifier issued by the Department of Food and Agriculture for the cannabis product.
- Each transportation load will be recorded and itemized on detailed transportation manifests, with electronic tracking to ensure a secure chain of custody at each point of transport.
- The transportation team shall maintain a physical copy of the shipping manifest and make it available upon request to agents of the Department of Consumer Affairs and law enforcement officers when products are in transit.
- The licensee receiving the shipment will maintain each electronic shipping manifest and shall make it available upon request to the Department of Consumer Affairs and any law enforcement officers.

- Upon receipt of the transported shipment, the licensee receiving the shipment shall submit to the licensing authority a record verifying receipt of the shipment and the details of the shipment.

Sorting: Cannabis flower and biomass received at our distribution facility will be handled as follows:

- All incoming material, like bulk cannabis flower and manufactured cannabis products that are in their final packaging, will be segregated and labeled with the following information:
    a. Unique product identifier/Metrc tag
    b. Batch number of product
    c. Quantity
    d. Supplier State License #
    e. Origin of product identification: cultivator/farm/manufacturer
    f. Strain or Product name
    g. Date of delivery, method and time
    h. In the event Longitude Management intakes a batch that it intends to sell to another distributor, the responsibility for lab testing and labeling would then be transferred to the final distributor.
- All raw and unpackaged cannabis products will then be quarantined and R&D tested prior to being packaged.
- Once batches collected from vendors have passed testing and a Certificate of Analysis has been received from the testing lab, the product is then moved into a storage area to be ready for packaging and labeling or for distribution to a manufacturing facility.

h. Lab Testing and Quality: Longitude Management LLC is committed to working with licensed cannabis businesses that go above and beyond the testing requirements set forth by local and state regulations. We have already developed a network of local farmers and manufacturers whose ethos are steeped in organic and sustainable practices. All products go through quality assurance, inspection and testing. Longitude Management LLC will verify and only source and sell products that have met or exceeded the state's stringent guidelines. Longitude Management LLC will not sell or transfer any cannabis or cannabis products that are required to be tested before being

sold or transferred unless the required testing has been performed by a licensed laboratory. Longitude Management LLC will mark for waste any cannabis or cannabis products from a batch that has failed to meet state guidelines. When cannabis and cannabis products are tested at the facility, Longitude Management LLC will ensure that all required documentation concerning the product and product testing results are entered into applicable records and track-and-trace system. Quality assurance procedures will detail the following:

- Sample selection by the lab agent will be recorded by video camera. Harvest batches will not exceed 50 pounds.
- After the sample has been selected, the laboratory agent and our operations manager will sign and date a document, attesting to the sample selection having occurred, as required by state regulations.
- A sample "passes" a laboratory test when the sample meets certain specifications required by the state, such as no pesticides, mold or bacterial contaminants are detected. Once product "passes" laboratory tests the tested batch will be labeled as such and enter into the packaging program when applicable.
- If a product fails to pass testing it will be labeled and quarantined in the quarantine/fail storage area. If the contamination can be remediated as permitted by state regulations, then arrangements with the supplier will be made to send the batch out to a manufacturer or processor for remediation. If the contamination cannot be remediated, the batch will be destroyed, according to cannabis waste requirements.

i. Storage and Inventory Control:

- [redacted]
- Each storage will have temperature control and their own HVAC controller.
- Longitude Management will use Distru Software to accurately gather and keep inventory information in real-time. Distru software allows us to do batch-based product tracking with associated lab test results and expiration dates for each batch. The software also features built-in compliance tracking and monitoring, creates sales or purchase orders on demand, access order history and email invoices instantly or download them and send them as attachments.

j. Packaging and Labeling: Longitude Management will assist farmers and product makers with branding development assistance, along with the opportunity to fulfill the demands of in-house brands. Longitude Management will use the following equipment for its packaging and labeling needs:

- Biomass Shredder/ Grinders for the preparation of pre-roll products
- Pre-roll Machine
- Tamper Evident machine
- Labeling Machine applying labels to flat and tapered containers.
- Round Bottle Labeler
- Weighing Filler

k. Product Complaints: In the event of a complaint from a supplier (manufacturer, processor, cultivator or distributor) or a customer (a dispensary, delivery company or distributor), facility personnel take the following steps:

- If a product complaint is found to be defective, Longitude Management will replace the defective product with a non-defective version of the same type of cannabis good, or exchange for a similar cannabis good of equal value, as allowed in state regulations.
- A Complaint Form will need to be filled out with the name, contact information and license # of the customer submitting complaint, UID and description of the product, description of events, and photo documentation if available.
- Management will review the Complaint Form and determine the appropriate response, which may include contacting the cultivator/manufacturer supplying the product, contacting dispensaries receiving the product, notifying public health authorities; and/or process for determining any other additional follow-up that may be needed.

l. Weights and Measures: Weighing devices used in the facility will be approved, tested and sealed in accordance with Chapter 5 (commencing with Section 12500) of Division 5 of the Business and Professions Code, and registered with the Nevada County Sealer of Weights and Measures. Approved and registered devices will be used whenever:

- Cannabis or cannabis product is bought or sold by weight or count
- Cannabis or cannabis product is packaged for sale by weight or count
- Cannabis or cannabis product is weighed or counted for entry into the track-and-trace system

m. Waste Management: (a) Licensees shall not dispose of cannabis goods, unless disposed of as cannabis waste, defined under section 5000(g) of this division.

(b) Cannabis waste shall be stored, managed, and disposed of in accordance with all applicable waste management laws, including, but not limited to, Division 30 of the Public Resources Code.

(c) Cannabis goods intended for disposal shall remain on the licensed premises until rendered into cannabis waste. The licensee shall ensure that:

(1) Access to the cannabis goods is restricted to the licensee, its employees or agents; and

(2) Storage of the cannabis goods allocated for disposal is separate and distinct from other cannabis goods.

(d) To be rendered as cannabis waste for proper disposal, including disposal as defined under Public Resources Code section 40192, cannabis goods shall first be destroyed on the licensed premises. This includes, at a minimum, removing or separating the cannabis goods from any packaging or container and rendering it unrecognizable and unusable. Nothing in this subsection shall be construed to require vape cartridges to be emptied of cannabis oil prior to disposal, provided that the vape cartridge itself is unusable at the time of disposal.

(e) Cannabis waste on the licensed premises shall be secured in a receptacle or area that is restricted to the licensee, its employees, or an authorized waste hauler.

(f) A licensee shall report all cannabis waste activities, up to and including disposal, into the track and trace system, as required under Chapter 1, Article 6 of this division.

Authority: Section 26013, Business and Professions Code. Reference: Sections 26013 Bureau of Cannabis Control Order of Adoption - 48 of 138 and 26070, Business and Professions Code.

All waste will be secured, locked and tracked in accordance with State regulations and the dispensary Operations and Management Practices Plan.

- Solid Cannabis Waste Handling Procedure:
  - The cannabis waste will be weighed
  - Data will be recorded noting date, weight, wet or dry, batch number, plant variety or product and section of the facility generating the waste.
  - The waste will be bagged, tagged and moved in the track and trace system, as well as physically to the Secure Waste Storage.
  - The Longitude Management LLC team will give the state a minimum of seven day's notice through the traceability system prior to rendering the Cannabis solid waste unusable and disposing of the Cannabis waste.

- As per state regulations, cannabis waste will be disposed of at a manned and fully permitted solid waste landfill.

n. Diversion Prevention: Longitude Management LLC will implement a comprehensive security plan that addresses facility security, the facility's security and alarm system, product security during storage, product security during transport, and the secure handling of all cash and other payments in order to prevent theft and diversion. Longitude Management LLC security plan will also assist the Nevada City Police Department, the Sheriff's Department to prevent and detect the theft or diversion of cannabis. The Metrc track-and-trace system is the state's answer to diversion prevention and is spelled out in detail under the track-and-trace section of this business plan.

Longitude Management shall ensure that all cannabis goods batches are stored separately and distinctly away from other cannabis goods batches, within secure locking containers. Each container of each batch shall ensure a label with the following information is physically attached:

ii. The name, license number, and licensed premises address of the licensed manufacturer or licensed cultivator who provided the batch
iii. The date of entry into the licensed distributor's storage area
iv. The unique identifiers and batch number associated with the batch
v. A description of the cannabis goods with enough detail to easily identify the batch
vi. The weight of or quantity of units in the batch
vii. The best-by, sell-by, or expiration date of the batch, if any

o. Good Neighbor Policy: Longitude Management LLC will establish and maintain procedures for working to support our community and to resolve community concerns/complaints about our operations. We are committed to keeping open communication between our clients and our staff, and neighbors and management. It is important for us to educate our neighbors and clients about the procedure for expressing concerns or dealing with complaints about our operations so that requests, questions, concerns and ideas are addressed in a positive manner and timely fashion. *A summary outline of the procedure is included in our Community Outreach and Engagement Plan.*

5. Product list

- **Whole Plant and Flowers**: Dried flowers from licensed, local small craft cultivator and manufactures.
- **Concentrates/Extracts**: Extractions allow consumers to regulate dosage more easily and are available in a wide variety of strains and strength. Our local

manufacturers understand and facilitate the medical benefits of CBD throughout their product lines.

- **Edible Cannabis Product**: Manufactured cannabis that is intended for both THC and CBD consumers is readily available here in our community. Edibles are the most common way for CBD to be consumed. With approx 25% senior population in Nevada City we want to make sure that there is an open distribution line for both THC and CBD edibles to reach the local dispensary.
- **Tinctures:** Tinctures can be added to beverages and produce a more rapid onset of cannabis effects. Numerous artisans in the Sierra Foothills create high end, licensed tinctures.
- **Cannabis Supplements**: These are a number of local manufacturers that create capsules, pills, sprays, patches, and tonics infused with cannabis. These methods are ideal for consumers seeking curative treatment and cannabinoid saturation treatments.
- **Topical Preparations**: Cannabis can be infused into a number of topical ointments and lotions that may help with conditions, such as eczema or dry skin.

6. Local and State Law Compliance

Longitude Management LLC will be authorized to dispense cannabis to clients in compliance with California Health and Safety Codes 11362.5 and 11362.7, et. al., Attorney General's Guidelines for the Security and Non-Diversion of cannabis Grown for Use, and the Cannabis and Adult Use Regulation and Safety Act. We understand and will fully comply with Nevada City ordinance 2017-06. Our incorporating documents, operating procedures and day-to-day operations are designed to comply with all local and State laws. Our organization's existing operations are authorized to serve a large membership base of qualified California clients and our location will help meet the growing demand of clients seeking clean, safe, and affordable cannabis cannabis. Our proposed facility meets all zoning and compliance standards. Longitude Management LLC will retain the services of a compliance attorney to ensure compliance with any future changes to local and state cannabis laws and regulations.

Our in house Chief Compliance Officer will also ensure all compliance in day-to-day operations.

a. Compliance with Ordinance 2018-10

In December 2018, the Nevada City Council approved ordinance 2018-10, allowing cannabis businesses to operate within city limits, so long as they have a cannabis business permit, are in compliance with all applicable state and federal laws pertaining to its operation and comply with all applicable operational and zoning requirements set forth in the Nevada city Municipal Code. Ordinance 2018-10 further details specific Nevada City cannabis business requirements relating to licensure, facility design and layout, lighting and signage, record keeping, site

management, security, and operational requirements, as well as the application process for organizations.

Should Longitude Management LLC be selected for a license to operate in Nevada City, we are fully prepared to comply with all aspects of Ordinance 2018-10. We have a long history of compliance with local cannabis programs as previous licensed providers in the city of Nevada City, city of San Diego and several municipalities in the state of Oregon. Our organization is prepared to do what it takes to ensure we go above and beyond what is expected by the city.

b. Compliance with California State Laws

The team at Longitude Management LLC has extensive knowledge of how the regulatory framework has evolved and been established in the state of California since 1996, when Proposition 215-CA Health and Safety Code 11362.5 was approved. Because of our rigid protocols for membership and extensive documentation policies we can ensure that all active client members are in compliance with The Compassionate Use Act of 1996.

In October of 2015, the California State Legislature passed the Cannabis Regulation and Safety Act (MCRSA), which established a regulatory process for State licensing for cannabis businesses. In the 2016 legislative cycle the State Legislature passed three bills intended to regulate Cannabis: AB266, AB243 and SB643. Together, those bills are referred to as the Cannabis Regulations and Safety Act or MCRSA. MCRSA has been codified in the California Business and Professions Code. MCRSA only applies to medicinal use of cannabis with a doctor's recommendation.

After the passage of Prop 64 or AUMA, MCRSA was later repealed with many of its provision being transferred to a new set of laws called MAURCSA which took hold on January 1, 2018.

We will continue to adapt our programs where necessary to comply with new regulatory requirements as they are developed and implemented by the Bureau of Cannabis Control. Through our memberships with The International Cannabis Farmers Association and the Nevada County Cannabis Alliance, our organization will ensure that the transition to the State licensing program is smooth and fluid. We will work with Nevada City officials to ensure that our program meets all requirements set forth by the State, as well as the City. Longitude Management LLC will retain the services of a compliance attorney to ensure compliance with any future changes to local and state cannabis laws and regulations. Longitude Management shall be able to account for all inventory and provide that information to the Bureau upon request. We shall ensure all batches of cannabis goods are stored in accordance with section 5302 and 5309 of Section 26013, Business and Professions Code.

c. Tax Compliance

Taxes assessed on cannabis businesses are remitted to the California Department of Tax and Fee Administration. All sellers of cannabis are required to hold a seller's permit, report sales and pay taxes. Distributors are required to obtain a Cannabis Tax Certificate and remit state

taxes to the CDTFA. The transportation of any cash payments will be held in our cash deposit vault and delivered via our transport vehicle accordingly.

A cultivation tax of $9.25 per dry-weight ounce of cannabis flowers, $2.75 per dry-weight ounce of marijuana leaves. Longitude Management will serve to function as the remitter of cultivation tax amounts, before the cannabis or cannabis products ever reach a retailer. Cultivation tax amounts are due 30 days after the end of the quarter in which the cannabis or cannabis products "enter the commercial marketplace". The triggering event for this tax deadline is when cannabis goods complete and comply with quality assurance testing requirements set forth in regulations (i.e., when the cannabis goods pass lab testing).

Cannabis will be subject to a 15% excise tax at point of sale to the consumer. Excise tax is assessed at the time of transaction from distributor to retailer, must be collected by the distributor from the retailer and remitted within 90 days. In an arms-length transaction (between a distributor and a retailer who do not share ownership affiliation), Excise tax amounts are due within 90 days whether the cannabis goods have sold already. The rate of excise tax on cannabis goods is based on "Average Market Price", which is determined by the CDTFA quarterly.

As a distributor, Longitude Management is responsible for transporting cannabis and cannabis products between licensed cannabis businesses. When a distributor sells cannabis or cannabis products to a retailer, and the retailer provides a valid and timely resale certificate, the sale is not subject to sales tax. Regardless if all sales of cannabis goods are not subject to sales tax, it will be required to file a return and report all sales transactions to the CDTFA.

The City of Nevada City has proposed a municipal tax rate of 4% on Dispensaries and 2% on other Cannabis Businesses. Longitude Management will pay 2% to the City of Nevada City with 30 days of the previous quarter..

d. Tax Remittance

Taxes assessed on cannabis retailers and cultivators are remitted to the California Department of Tax and Fee Administration. All sellers of cannabis are required to hold a seller's permit, report sales and pay taxes. Distributors are required to obtain a Cannabis Tax Certificate, and are the sole licensed entity to remit state taxes to the CDTFA on behalf of other licensed cannabis businesses. We will collect taxes when cannabis goods enter the commercial market. Taxes will be paid monthly in accordance with the tax schedule under existing law. The transportation of any cash payments will be held in our cash deposit vault and delivered via our transport vehicle accordingly.

7. Track and Trace System

Longitude Management will implement Metrc track-and-trace inventory control system to monitor the chain of custody of cannabis from the point of transfer to the facility to the retailer. Longitude Management's inventory control systems will include all cannabis and non-cannabis products.

Longitude Management LLC has identified Distru as the global leader in Point of Sale system for cannabis and integrates state-mandated Seed-to-Sale traceability technology. Established in 2006, Distru is a pioneer provider of both business management and government oversight software, the Distru team has the professional experience necessary to navigate regulations and enforce compliance across varying landscapes. This technology will allow Longitude Management LLC to successfully manage inventory and report to the appropriate authorities, including the city and state, as required.

Distru's comprehensive product suite increases transparency and accountability by monitoring key data points during cultivation, harvest, extraction, packaging, transport, and dispensing. In 2013 Distru successfully implemented the Washington State Traceability System, the world's first real time cannabis seed-to-sale traceability program. Oregon adopted the software in 2016 to integrate it with its track-and-trace program.

Additionally, Distru is compatible with the State of California's requirements and can seamlessly integrate with the Metrc Track and Trace System.

a. Functionality of Seed to Sale Software:

- State of California and Bureau of Cannabis Control compliance reporting.
- Product expiration dates.
- Complete and detailed transport manifests.
- Real time client and client limit tracking to avoid over dispensing based on state law.
- Real time product recall alerts.
- Maintains compliant labels, warning and required disclosures.
- State certified digital scale to reduce loss and increase accuracy of inventory.
- Integrated ID scanners which will not allow a sale until an ID is scanned.
- Employee restrictions, which only allow the proper employees to see the data they need to see.
- Audit logs.

b. Responsible Employee: The manager on duty (MOD) is the designated employee with oversight of Longitude Management's inventory control system and overall inventory management within the facility.

c. Initial Inventory: Prior to commencing business, Longitude Management LLC will conduct an initial comprehensive inventory of all cannabis received at the facility.

d. Monthly Inventory Protocol: Longitude Management LLC will manage, check and monitor inventory, such that we can accurately and consistently document the status of all products:

- Each day's beginning inventory, acquisitions, sales, disbursements, designation and disposal of unusable cannabis, and ending inventory.
- Any samples provided, including the provision, return and/or destruction of the same, as set forth by law and regulation.
- Each batch of cannabis received shall include:
  - The batch number
  - The number of cannabis seeds or cannabis cuttings
  - The date the cannabis seeds or cuttings were received
  - The list of all chemical additives, including, without limitation, pesticides, herbicides and fertilizers used in the cultivation or propagation of seeds and cuttings.
- A complete physical inventory of both usable and unusable cannabis will be performed on a monthly basis and logged into the track and trace system. Longitude Management's staff will document the following:
  - Date of the inventory
  - Summary of the inventory findings
  - The name, signature and title of the employees who conducted the inventory and the agent-in-charge who oversaw the inventory
  - Longitude Management staff will count and precisely weigh all products, including:
    - Packaged Cannabis
    - Cannabis Products
    - Cannabis products in quarantine
    - Waste Cannabis awaiting disposal
    - Cannabis plants in various stages of growth, including seedlings and seeds.
- Records of all cannabis sold will show:
  - The date of sale
  - The name of the cannabis client who purchased.
  - Batch number, product name(s) and quantity of cannabis products sold
- Records of all Cannabis destroyed will show:
  - The date the cannabis was destroyed
  - Manner in which it was destroyed
  - Reason it was destroyed
  - Employee responsible for the destruction of the cannabis

e. Random Physical Inventory Checks: Random physical inventory checks will be conducted throughout the facility, throughout the year. Longitude Management's staff will document one or more of the following:

- Packaged Cannabis
- Cannabis Products
- Waste Cannabis awaiting disposal

f. Annual Inventory: A complete and accurate recording of all cannabis plant stock and products on hand will be prepared annually on or before the anniversary of the initial inventory under the direct supervision of the MOD.

- **Inventory Audit**: The manager on duty shall conduct and document a system-wide audit of the inventory of the establishment that is accounted for according to generally accepted accounting principles at least once every year, and made available to government agencies as needed.

- **Justified Inventory Adjustments Can Be Made**: Any non saleable products will be donated or repurposed into saleable products, in accordance with state regulations, and entered into the track-and-trace system. Only Authorized Personnel Can Make Adjustments.

- **Inventory Discrepancy Procedures**: If an audit or random inventory check identifies a reduction in the amount of cannabis in the inventory of the establishment not due to documented causes, or in the event actual inventory counts to not match the recorded or expected counts, the Longitude Management team shall determine where the loss has occurred and take and document corrective action. If the reduction in the amount of cannabis in the inventory of the establishment is due to suspected criminal activity by an employee, the Longitude Management LLC team shall report the employee to the appropriate law enforcement authorities. When a significant discrepancy in inventory occurs, the MOD will conduct an internal audit and investigation and report to appropriate agencies and authorities within 24 hours. The MOD will document the incident in a report that includes the following information:
    - Incident date
    - Name of people involved
    - A description of the incident
    - Identification of known or suspected causes of the event any corrective actions taken. Pursuant to law all such incidents will be reported to regulatory and/or law enforcement authorities.

g. Cannabis Waste Tracking and Notification: All waste will be secured, locked and tracked in accordance with State regulations and the dispensary Operations and Management Practices Plan.

- Solid Cannabis Waste Handling Procedure:
    - The cannabis waste will be weighed

- Data will be recorded noting date, weight, wet or dry, batch number, plant variety or product and section of the facility generating the waste.
- The waste will be bagged, tagged and moved in the track and trace system, as well as physically to the Secure Waste Storage.
- The Longitude Management LLC team will give the state a minimum of seven day's notice through the traceability system prior to rendering the Cannabis solid waste unusable and disposing of the Cannabis waste.
- As per state regulations, cannabis waste will be disposed of at a manned and fully permitted solid waste landfill.

h. Data Storage: All aspects of the cannabis plants, byproduct wastes, weights, ID numbers and associated data is stored in the system indefinitely. Destruction event information and explanations are also documented and stored within the track-and-trace software system. This data cannot be modified or deleted by the dispensary center employees or even by track-and-trace software. Track-and-trace software records manual inventory adjustments through a detailed notes section. The reason for disposal and, if applicable, disposal company are recorded and archived to the 16 digit barcode associated with the disposed cannabis. As with all transactions in the track-and-trace software system, the employee responsible for the transaction is required to enter a PIN number or biometric fingerprint recording the date, time, and reason for the transaction.

8. Timeline

a. Timeline of Proposed Construction

The Longitude Management LLC facility will be retrofitted. The following are permits we anticipate needing from the City before beginning the property improvements:

- Planning/Zoning Use Permit
- Signage Permit
- Electrical Permit
- Mechanical/Plumbing Permit

Our estimated timeline is as follows if we are granted a permit by Dec 30, 2019:

- December 2019 - Begin retrofit planning and Permitting Process
- 3-6 weeks to obtain permits
- 30-45 days to complete build-out and install fixtures, carpets and interior items.

Our estimated time to open the facility, depending on building permits and state approval, would be between March and April of 2019. The timeline is based on estimates of time given by the City for the application process, with 60-90 days estimated for the Staff review process and time estimated for an Advisory Committee Review. Our organization will make every effort to

get the facility open as soon as possible and we are prepared to move forward with our plans immediately.

b. Accommodation of Persons with Disabilities (ADA Compliance):

To comply with the National Americans with Disabilities (ADA) as well as the State of California Handicap Access codes, the existing building does not require any upgrades. There currently are appropriate and updated access points at all entrances to the building. All doors, hallways, and restrooms are compliant, and all interior or exterior improvements will incorporate necessary standards to remain ADA compliant. The parking lot will has a designated ADA parking space with proper signage in place consistent with Nevada City Parking Requirements. Our service counters and service areas will all have ADA access points as well, including appropriate height counters and tables. The main entrance is at ground level (no stairs) and will not require a wheelchair ramp or guardrail.

9. Target Market Analysis

a. Area of Influence

California has 39.56 million residents and easily remains the biggest government-sanctioned market in the nation, with a projected 3 billion in licensed sales in 2019 (Per Los Angeles Times, Aug 2019). Consumers over the age of 50 are 25% of the market and the fastest growing demographic while millennials are still the largest group of consumers.

Longitude Management LLC has projected its area of influence to be the entire State of California. However, we will be focusing on creating a marketing and branding campaign that focuses on offering local products to the regional market. There are currently 78 cannabis operations in the licensing process in Nevada County. Our goal is to give our local businesses an avenue to reach market. Longitude Management will also provide an in house distribution channel to supply the already licensed and operating Nevada City dispensary, Elevation 2477', keeping local products local.

b. Economics and Market Place Need

[redacted]

The majority of Longitude Management LLC targeted suppliers reside in the unincorporated areas of Nevada County. By establishing a location in the seat of Nevada County, Longitude Management LLC has the opportunity to provide these underserved farmers and manufacturers with a safe, reliable outlet to fulfill their cannabis distribution needs.

c. Market Trends and Development

The industry will continue to grow and become more profitable due to the aging baby-boomer generation in the United States, which is projected to drive increasing demand for cannabis as the dangers of some prescription drugs continue to be documented and discussed in the news media. In addition, prescription drug cost continue to rise while the cannabis markets has remained relatively stable over the past four years.

cannabis dispensaries are now making use of technology to effectively manage their business by plugging financial leakages. The use of technology, i.e. Distru software is very effective in helping retail businesses manage their clientele base.

For every $1 consumers/clients spend at dispensaries/stores, an additional $3 of economic value will be injected into the economy – much of it at the local level, according to the Marijuana Business Daily's Marijuana Business Factbook 2016.

d. Brand Differentiation and Value Proposition: Our Competitive Advantage

In this industry, most of the competitive dynamics center around the quality of cannabis dispensed, the service offered, the location where the dispensary is, discounts offered for the products, and to some extent, the branding of the business plays a significant role. It is through superior client service, thorough knowledge of cannabis research and therapies, and the highest quality of products that we can secure a fair share of the available market.

10. Marketing Plan

The marketing and sales strategy of Longitude Management LLC will be based on generating long-term personalized relationships with dispensaries and partnering with additional distribution facilities.

All of our employees will be well trained and equipped to provide the best service. We expect that if we are consistent with offering high quality cannabis from the Sierra Foothills, along with excellent client service, we will increase the number of our clients by more than 25 percent for the first year and then more than 30 percent subsequently.

Our marketing strategy will consist of *discrete* and *sophisticated* advertising in publications targeting dispensaries and other distribution facilities.

11. Financial Projections

See attached Spreadsheet for financial model and Proof of Capitalization

12. Parking Plan

Longitude Management LLC is committed to implementing a parking plan that is congruent with a smooth traffic flow in and out of our facility, including a strict parking monitoring program. Designated spaces will be clearly marked for distribution use and directional signs direct traffic to the appropriate parking areas. Our team will also establish lines of communication with neighboring businesses to ensure clients coming to the distribution facility don't use neighboring businesses parking stalls. Longitude Distribution is not a retail or forward facing business expecting traffic outside of deliveries and staff, therefore we should not be a contributor to the neighborhoods shortage of parking but increasing available parking for retail customers to neighboring businesses.

Longitude Management has 1850 sq ft of an 8150 sq ft building allocating them six (6) of the on site parking spots (22% of the 31 parking spots for the building). We expect to have a maximum of 4 employees on site daily and one vendor at a time, utilizing five (5) spots at peak times.

Cannabis Re | Microsoft W | Fwd: Disper | 1. Proposed | ELEVATION | parking pla | Elevation 2 | TO DO - Go | cannabis_o | Licensing F
drive.google.com/drive/u/1/folders/0B_tltUsp5Yb-a2d1a0ZaaExOQW8
LML-D-53
ELEVATION 2477 DISPENSARY.pdf
Open with Google Docs

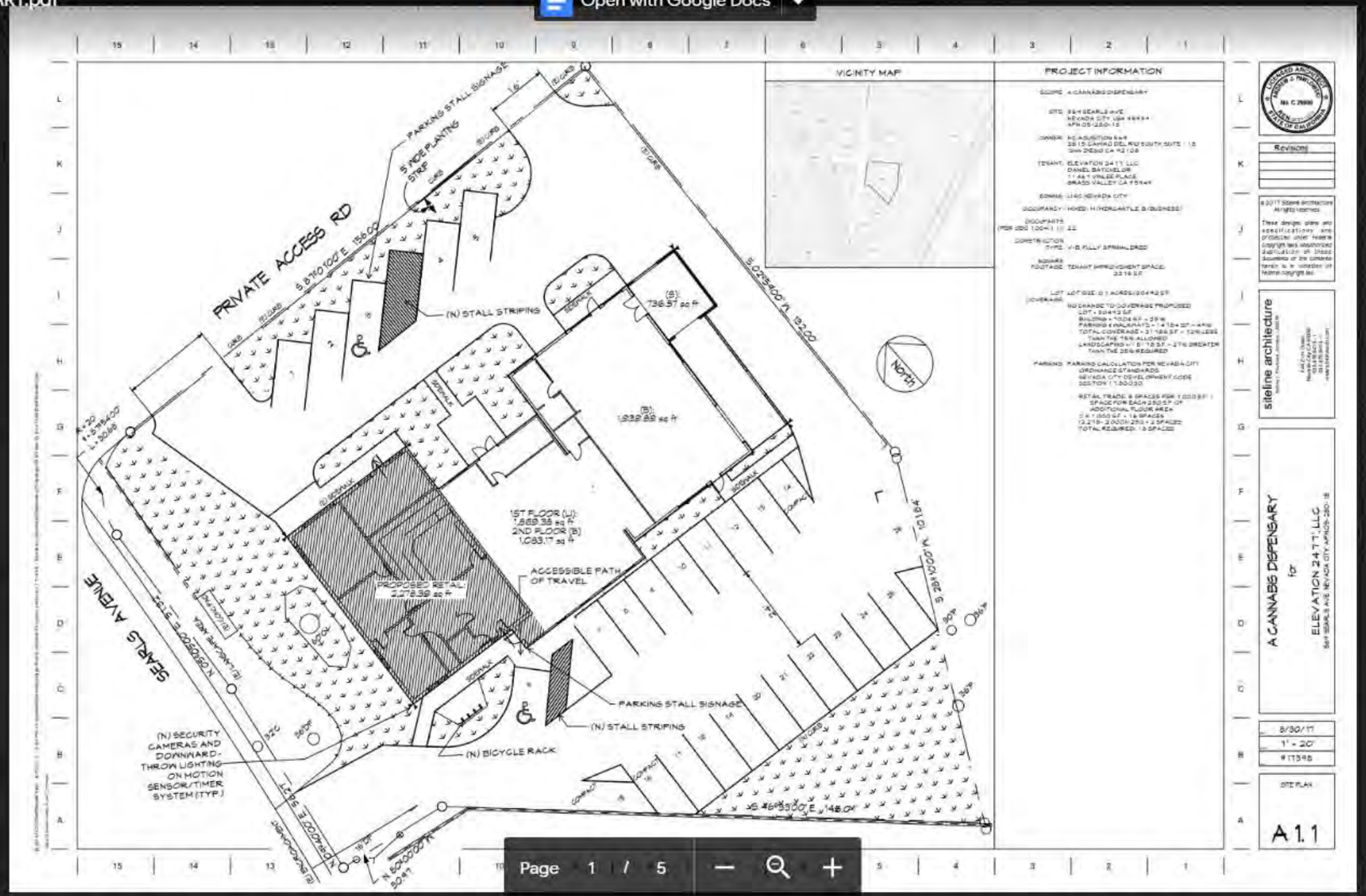

Page 1 / 5
BCC-Order-of-Ado....pdf
Show all
Type here to search
4:12 PM
9/24/2019

NEIGHBORHOOD COMPATIBILITY

LONGITUDE DISTRIBUTION

To Agenda

Nevada County, CA

LML-D-55

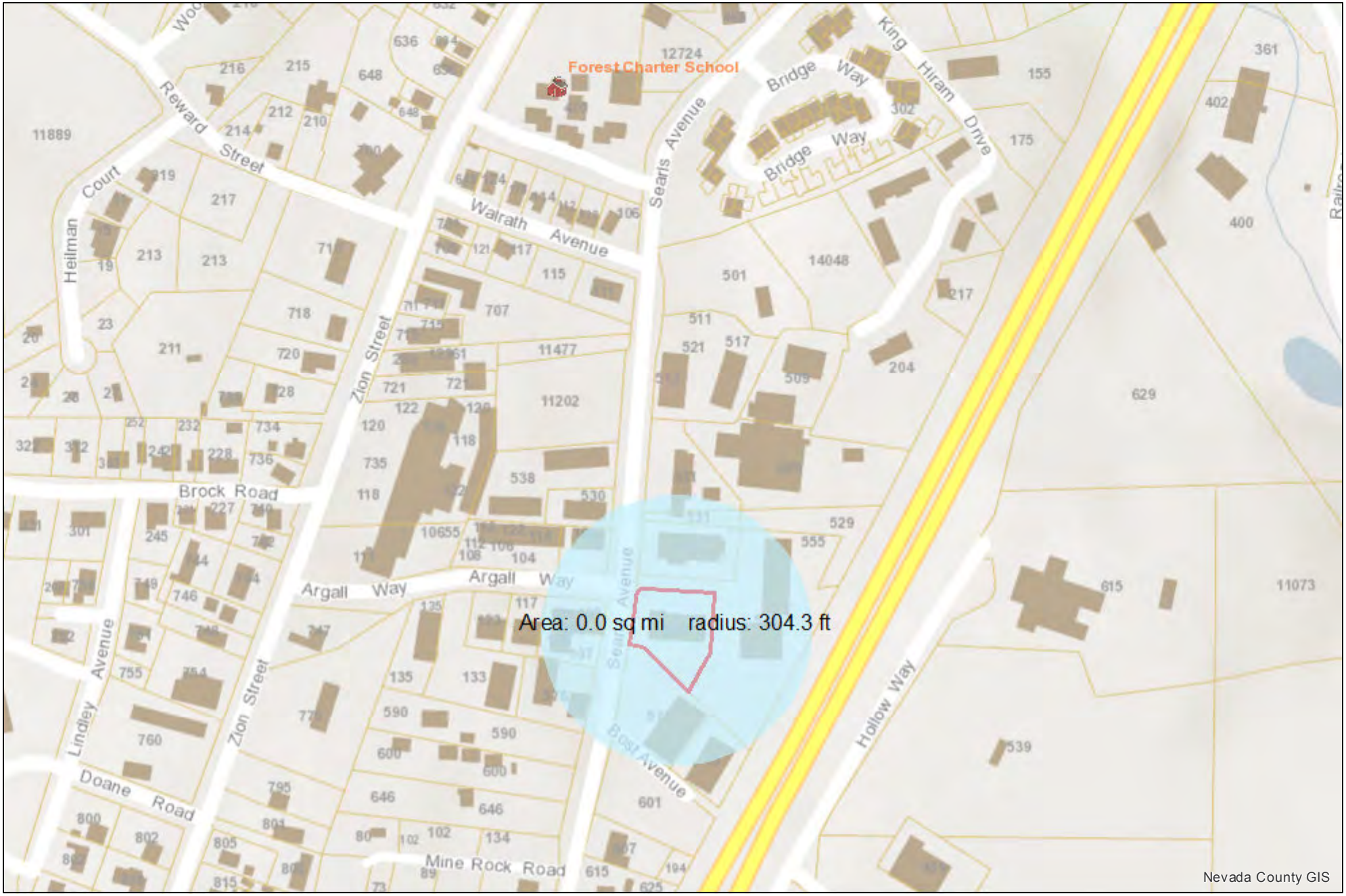

September 18, 2019

1:4,514

0 0.0375 0.075 0.15 mi

0 0.05 0.1 0.2 km

Nevada County GIS
©2018

Vicinity Map:

LML-D-56

569 Searls-Map 2

1000' Transportation Buffer

300' Business Buffer

Parcels within 300'

Subject Parcel - 569 Searls

Nevada County Parcels

BUS STOP

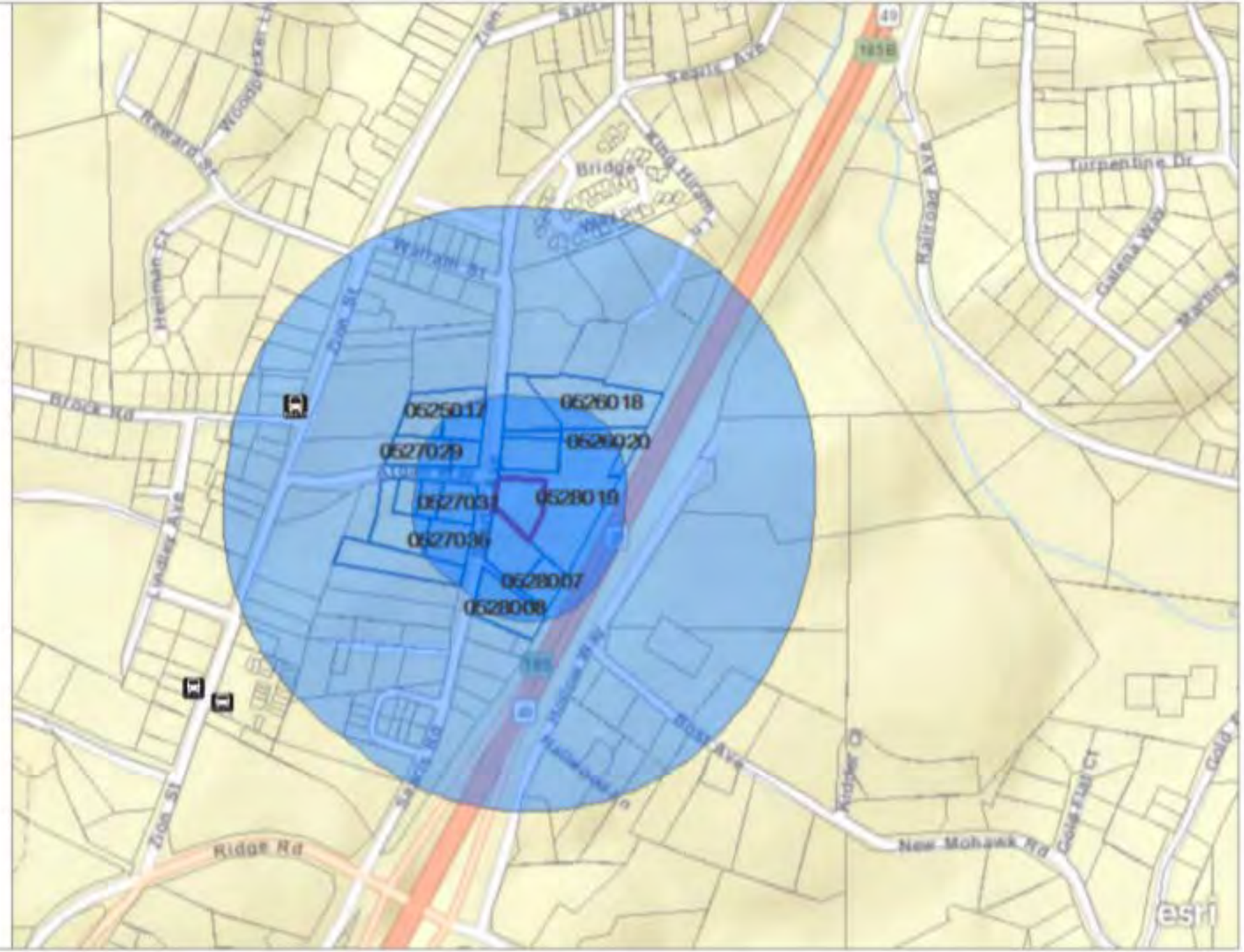

1000ft

Longitude Management
569 Searls Ave, Suite B
Nevada City, CA 95959

Dear Neighbor,

The Nevada City Council passed and adopted Ordinance No. 2018-10 on December 12, 2018, comprehensively re-enacting Chapter 9.22 to allow adult use cannabis businesses in addition to the medical-only businesses previously allowed.

Longitude Management is an affiliate of Elevation 2477', already your neighbor, and we plan on using the former Fit for Life suite at 569 Searls Avenue to conduct a small distribution company and office space.

569 Searls Avenue, Suite B, is within 300 feet of your residence or business and falls within the city's distribution ordinance zoning requirements. It is our intent to begin the application process towards obtaining a cannabis distribution license for this location and we would like to mitigate any concerns you may have regarding our business.

For us, a distribution facility next to our retail space means we will be able to get local products to the shelves much quicker and safer than before. Since the beginning of our involvement in the local cannabis industry, our goal has been to provide access to patients and adult consumers to lab tested, regulated cannabis products as well as support our local farmers who are seeking safe and legal means of distributing locally grown cannabis. As always, our team of businesses aims to create avenues that empower people's choices about what brings them relief and wellness and support the economic vitality of our community.

As farmers, dispensary owners, and community members we believe we can address any concerns you may have regarding how our distribution company will be operated. We would like to be of service throughout this transition and will be available to provide as much information to help you understand the process as you desire.

Please don't hesitate to contact us at 530-237-4933 or daniel@latitudemanagement.com

Thank you for the opportunity to be good neighbors,

Sincerely,

Daniel Batchelor and The Team at Longitude Management

To Agenda

Neighborhood Compatibility Plan

The 7 Hills Business District has been home to Elevation 2477', our affiliate business, since its application was approved in Nov 2017. As community minded business owner, we have executed an impeccable community relations plans that has made us a responsible and considerate neighbor to residents and other businesses in our area.

Longitude Management plans on carrying on the tradition of being an exemplary cannabis business in the community. Our distribution space at 569 Searls Avenue, Suite B is uniquely positioned among other cannabis businesses in the Searls Cannabis Campus. The facility is a well-lit, well-ventilated commercial building using light diffusion panels and windows, which prevent viewing into the facility. Suite B has two entrances, one in the front of the building and one in the back facing the larger parking lot located in the southern-facing portion of the parcel.

The exterior areas and surrounding public areas are already strictly managed by an exterior building security protocol that is included in our Safety and Security Plan, outlining measures and procedures that will provide additional safety to neighboring businesses and residences. We will share security personnel with Elevation 2477' to walk the surrounding areas of the location before opening, during operating hours, and after closing the facility.

To prevent access into the distribution facility, there are limited points of access. All doors (whether interior or exterior) will have electronic surveillance and sounding alarm equipment to deter and detect unauthorized intrusion and emergency exits.

Our signage will be discreet and give no indication about the nature of our business, in keeping with the requirements of the statute while at the same time minimizing the presence of nuisances.

The distribution facility's aesthetic is ideal for anonymity and security purposes. In addition, Longitude Management will prevent viewing into the building by using light diffusion windows that will be protected with custom metal security bars as you have seen at our retail facility in the same building.

The main entrance area will be modestly marked. Warning signs on the main entrance door will advise all entrants that no firearms or dangerous weapons are allowed anywhere in the facility or on the grounds.

The exterior of the building shall be equipped with an automatic electronic alarm, lighting, and video monitoring to detect unwanted and unauthorized intrusion. We will, through planned construction improvements and security equipment installation, ensure that the building, people and product inside are safe from unwanted or negligent harm, and that no products are not observable from outside the facility.

To Agenda

Former Nevada City Police Chief Tim Foley and current Chief Chad Ellis have both toured the entire campus and provided advice on how to address security concerns. As a result, Lab Properties, our landlords, installed landscaping that removed blind spots to make the exterior of our facility as safe as possible for our neighbors, patrons and employees. Law enforcement members also provided advice on cash drop protocols, inventory controls and product safety, all of which is addressed in our Safety and Security plan.

Odor Mitigation

Elevation Distribution will make every effort to be a good neighbor and avoid nuisances of odor that may be generated by its operations. Its Odor Control Plan, which includes a state-of-the-art HVAC system will mitigate against any such issues. The HVAC system will provide adequate ventilation and includes the following features:

- Equipment for adequate control over air pressure, microorganisms, dust, humidity and temperature when appropriate for the packaging or holding of cannabis products.
- Filtration systems -- including pre-filters and particulate matter air filters -- on air supplies to production areas, with the intakes placed in areas of highest anticipated contaminant concentration.
- Exhaust and other systems adequate to control odor and contaminants, with a ventilation rate of at least 15 cfm/occupant based on occupancy of 30 persons at any given time.
- In order to meet these odor mitigation goals, Longitude Management will install one CosaTron Model LC2000 mounted on the HVAC system and at least two CosaTron Model RV750's to be utilized in the occupied space. We have already tested this product at Elevation2477'. For efficient odor removal, the system creates an air recirculation rate of about 12-15 times per hour which equates to 4,500 – 5,625 CFM. The combination of the LC2000 system on the return of your 5 ton unit (2,000 CFM) and two RV750 systems (1,000 CFM each) will get us to the appropriate air change rate.
- Once odor control has been established, periodic testing shall be conducted to ensure that the odor control systems are operating to maintain the baseline. As the filters age, replacement will be required and will be conducted, as determined by the calibrated sensor on the test equipment.
- Testing will be done, in the absence of other standards, in accordance with Standardized Odor Measurement Practices for Air Quality Testing. Testing shall be done using a field Olfactometer, calibrated in accordance with ASTM E544-75 and AWMA odor control standards.
- Planned, scheduled monitoring on a daily walk-about visit around the exterior of the site, near the exhaust system.

Neighborhood Concerns

The Longitude Management Team has met or delivered letters of intent to every business owner/manager and homeowner within a 300-foot radius to explain our plans, address concerns and extend our assurance that we are committed to continuing being good neighbors.

The neighboring businesses and residents who were contacted expressed support for our business. The two concerns expressed were:

Pete's Welding & Machine, 521 Searls Ave, Nevada City, CA 95959; was concerned that the signage at the existing dispensary isn't sufficient to get all customers in without turning around in his drive. We assured him that Longitude Management is not a retail business and will experience minimal traffic.

Reibe's Auto Parts, 535 Searls Ave, Nevada City, CA 9595; was concerned that the traffic would overflow into his parking lot. We assured him that Longitude Management is not a retail business and will experience minimal traffic.

Vicinity Map:

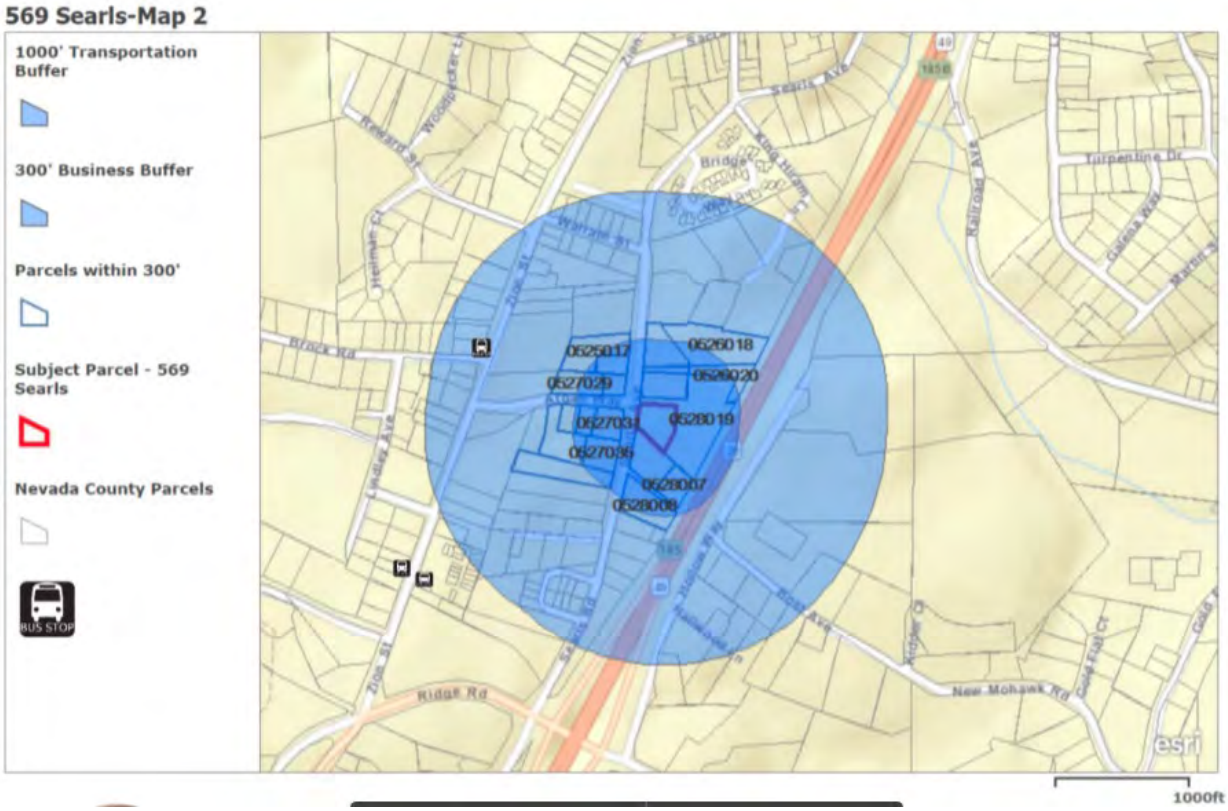

Cannabis Re | Microsoft W | Fwd: Disper | 1. Proposed | ELEVATION | parking pla | Elevation 2 | TO DO - Go | cannabis_o | Licensing F
drive.google.com/drive/u/1/folders/0B_tltUsp5Yb-a2d1a0ZaaExOQW8
LML-D-61
ELEVATION 2477 DISPENSARY.pdf
Open with Google Docs

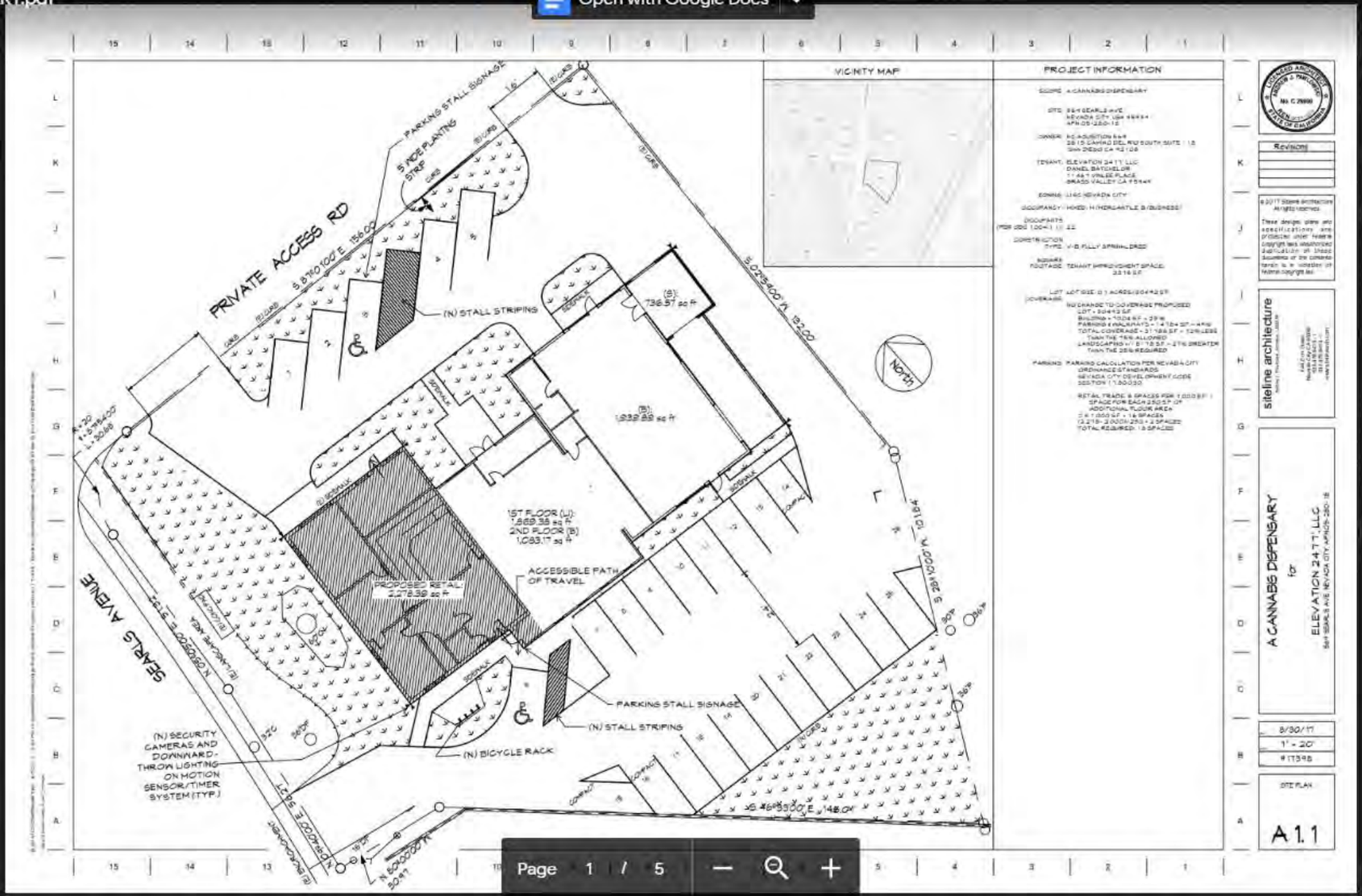

Page 1 / 5
BCC-Order-of-Ado....pdf
Show all
Type here to search
4:12 PM
9/24/2019

SAFETY AND SECURITY

LONGITUDE DISTRIBUTION

To Agenda

LML-D-63

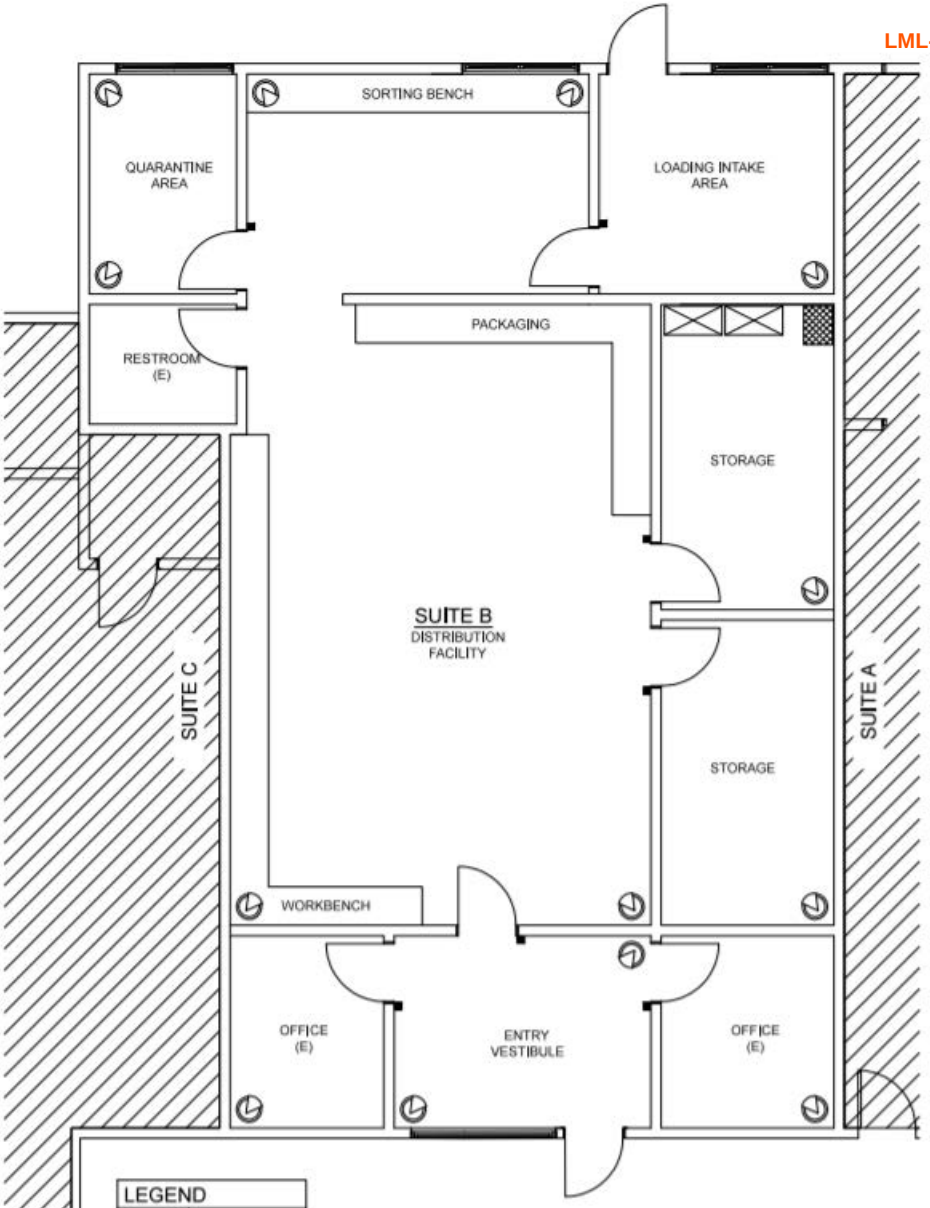

LEGEND	
	SAFE
	SECURITY CABINET
	CAMERA
	KEYCARD ACCESS (LAA)

1 SUITE B FLOOR PLAN - SECURITY

Scale 1/8" = 1'-0"

N

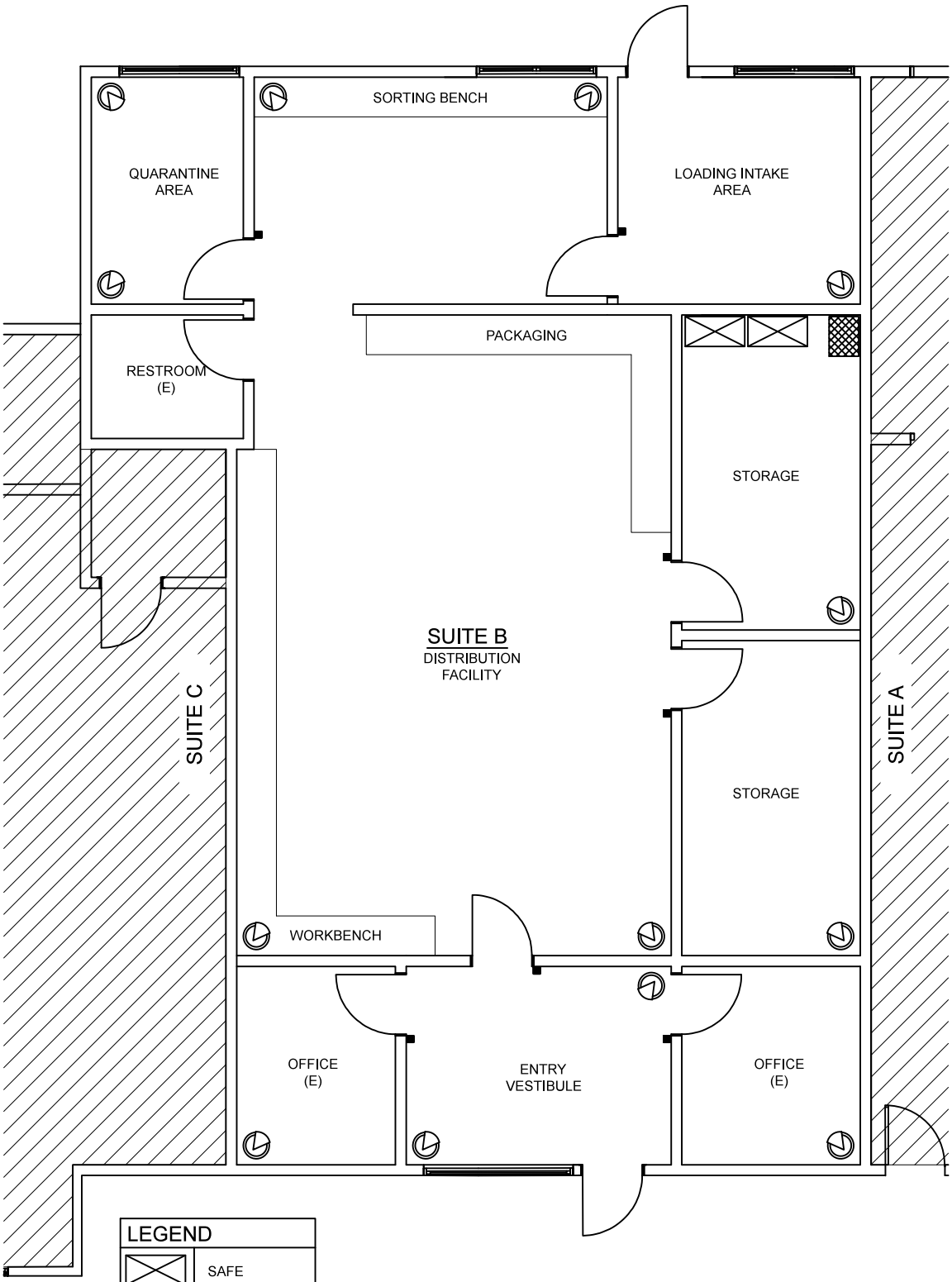

LEGEND	
	SAFE
	SECURITY CABINET
	CAMERA
	KEYCARD ACCESS (LAA)

1 SUITE B FLOOR PLAN - SECURITY

Scale 1/8" = 1'-0"

N

To Agenda

Beam Vacuums of
California Inc.
SCL #555162

BEAM "Easy Living" CENTER

Bea[redacted]ty
Systems Inc.
SCL #555161
ACO #3000
NV #0077351

[redacted]

August 17, 2017

[redacted]

[redacted]	[redacted]
[redacted]	[redacted]
[redacted]	[redacted]
[redacted]	[redacted]
[redacted]	[redacted]
[redacted]	[redacted]
[redacted]	[redacted]
[redacted]	[redacted]
[redacted]	[redacted]
[redacted]	[redacted]
[redacted]	[redacted]
[redacted]	[redacted]

[redacted]

[redacted]

[redacted]

To Agenda

Beam Vacuums of
California Inc.
SCL #555162

Bid# Q000010372

BEAM "Easy Living" CENTER

422 Henderson St. Grass Valley, CA 95945 530-273-5166 800-273-0966 fax 530-274-3612

Beam Security
Systems Inc.
SCL #555161
ACO #3000
NV #0077351

CUSTOMER NO.

ELEVAT

PROPOSAL/CONTRACT

Security System

Existing

DATE August 17, 2017

Proposal To:

Elevation 2477
569 Searls Ave.
Nevada City CA 95959
onedbatchelor@gmail.com
Phone:(530) 320-1193

Job Site:

Elevation 2477
569 Searls Ave.
Nevada City CA 95959
onedbatchelor@gmail.com
(530) 320-1193

Under the Mechanics Lien Law, any contractor, sub-contractor, laborer, materialman or other person who helps to improve your property and is not paid for his labor, services, or material, has a right to enforce his claim against your property. Under the law, you may protect yourself against such claims by filing, before commencing such work or improvement, an original contract for the work or improvement or a modification thereof, in the office of the county recorder of the county where the property is situated and requiring that a contractor's payment bond be recorded in such office. Said bond shall be in an amount not less than fifty percent (50%) of the contract price and shall, in addition to any conditions for the performance of the contract, be conditioned for the payment in full of the claims of all persons furnishing labor, services, equipment or materials for the work described in said contract.
In the State of California: Contractors are required by law to be licensed and regulated by the Contractor's State License Board. Any questions concerning a contractor may be referred to the Registrar of the board

Proposal Presented By:

X._____ **Date:** **August 17, 2017**

BEAM "Easy Living" CENTER

Representative: *Justin Anthney*

Justin.A@Beameasy.com 530-362-2426

Proposal Accepted By:

X._____ *Signature.* **Date:** _____

X. _____ *Printed Name.*

X. *onedbatchelor@gmail.com* *Customer Email.*

We reserve the right to substitute like quality and kind due to discontinued and /or model changes. Invoice terms shall be due upon reciept. Amounts not paid after 30 days shall incur a 1.5% late payment fee per month, prorated until paid.

To Agenda

Safety Plan

- **Fire Suppression**:
  - Going Beyond Code Requirements: Building is equipped with sprinklers both internally and externally. In addition, smoking is prohibited on premises.

  - Ensuring Electrical Safety: All electrical work will be performed by a local licensed electrician and permitted by the city according to all applicable building and local fire codes.

  - Good Housekeeping and Site Maintenance: Maintenance contractor will provide a monthly report of all maintenance work on premises and forecast any potential issues with the infrastructure of the facility.

  - Adequate Complying with State and Local Fire Codes: An initial walk through is scheduled with Fire Marshal for August 31.

  - Effective Emergency Response Plans: Procedures and instructions for responding to an emergency that will include:
    - Accident prevention training
    - How to respond to an emergency
    - Fire Safety Training and Drills
    - Emergency service provider location
    - Emergency service contact information
    - Emergency first aid kit locations
    - Emergency exits and panic button location

  - Fire Protection Checklist: MOD will perform a monthly Fire Protection inspection
  - Flammable and Combustible Material Checklist: No flammable or combustible chemicals will be kept on premises.
  - Evaluation of Independent Fire Consultant: A once a year detailed inspection of the facility to identify any potential fire risks.

- **Fire Prevention**: Fire extinguishers are properly located and maintained throughout the building. No hazardous materials are located onsite. A fire exit plan will be in place in the event a fire occurs in the facility. Adequately lit exit signs are located both in the front and rear of the building. Additionally panic exit bars will be located on each exit door. All rooms will be equipped with smoke and carbon monoxide detectors. The HVAC is new and will provide adequate airflow and comfort to the clients.

- **Alarm System**: Professionally installed alarm system. Additionally a full layout of the Alarm System is provided in the Security Layout drawing includes 7 motion detectors, alarm contacts on external doors and product safe room which will directly contact manager and owners upon opening via a phone app along with window contacts on all external windows.

To Agenda

[redacted]

[redacted]

[redacted]

[redacted]

[redacted] 0.

[redacted]

To Agenda

[redacted]

To Agenda

[redacted]

To Agenda

[redacted]

To Agenda

[redacted]

To Agenda

[redacted]

To Agenda

[redacted]

To Agenda

[redacted]

To Agenda

[redacted]

To Agenda

[redacted]

To Agenda

[redacted]

To Agenda

[redacted]

To Agenda

[redacted]

Employee Qualifications and Training

Purpose. The purpose of this policy is to ensure that licensee's employee screening process is aligned with the Nevada City and State of California requirements for cannabis handlers at medical retail facilities and also to ensure that employees receive sufficient training in their roles and responsibilities so that employee are able to support compliant facility operations.

Policy and Procedures

Training Upon Hire. All new employees will be trained on their specific responsibilities and all generally applicable responsibilities, including relevant requirements of the local and State regulations. Employees will be required to shadow a more experienced employee until employee is able to demonstrate the ability to perform all required tasks independently. As a part of the employee orientation process, and as an ongoing regimen, all employees will be provided with a copy of the Employee Handbook, the Security Plan, as well as security and safety training. Security and safety training shall consist of examination and discussion of the Security Plan, premises orientation, emergency training, and situational training and drills. Situational training consists of instruction related to particular employees' job duties.

Initial employee safety and security training shall include:

1) Building orientation and access authority which shall include:
   a) The proper use of employee's access badge for entry into the premises and main building entrance;
   b) The proper use of employee's access badge for entry into employee's authorized access areas;
   c) The proper use of employee's agent card;
   d) Employee's authorized entry and exit points;
   e) Employee's locker; and
   f) Restroom and sink facilities.
   g) Review of police and fire contact numbers
   h) Review of fire safety procedures
   i) Code of conduct or SOP for dealing with trouble patients
   j) Procedure for handling anyone who may loiter

2) Measures and controls for the prevention of diversion, theft or loss of cannabis and cannabis

products which shall include:

a) Necessity of keeping all facility doors locked and secure at all times
b) Prohibited activities such as entrance into unauthorized access areas
c) Awareness of video monitoring
d) Inventory control system training for the tracking of all product-related activities and information
e) Requirement to report any unusual activity, security concern, or loitering

3. Procedures and instructions for responding to an emergency that will include:

a) Accident prevention training
b) How to respond to an emergency
c) Emergency service provider location
d) Emergency service contact information
e) Emergency first aid kit locations
f) Emergency exits and panic button locations

Policy Review and Affirmation. Employees will be provided with either a physical or digital copy of all facility policies and relevant operating procedures – upon hire or during the initial training process as appropriate – and will be required to read all policies and procedures and sign an affirmation that the employee has reviewed and understands all policies and procedures. All employee affirmations will be kept in licensee business records. Employees will be required to re-review policies and procedures any time there is a material change to such a policy or procedure, and will also be required to re-review policies and procedures at intervals determined by the nature of the policy (i.e., quarterly, annually, etc.).

Age and Criminal History. All employees must be 21 years of age or older at the time of hire, which will be verified by licensee prior to hire. Additionally, employees will be required to verify that they have not been convicted of a felony.

Employee Identification. While on duty and at the facility, employees will be required to have on their person at all times: valid photo identification, and licensee-issued clothing or badge that easily identifies the individual as an employee of licensee.

No Intoxication on Duty. Licensee will not permit any employee, licensee representative, or authorized personnel to be under the influence of intoxicants. No cannabis consumption is allowed onsite or on the premise even if the employee has a medical cannabis card.

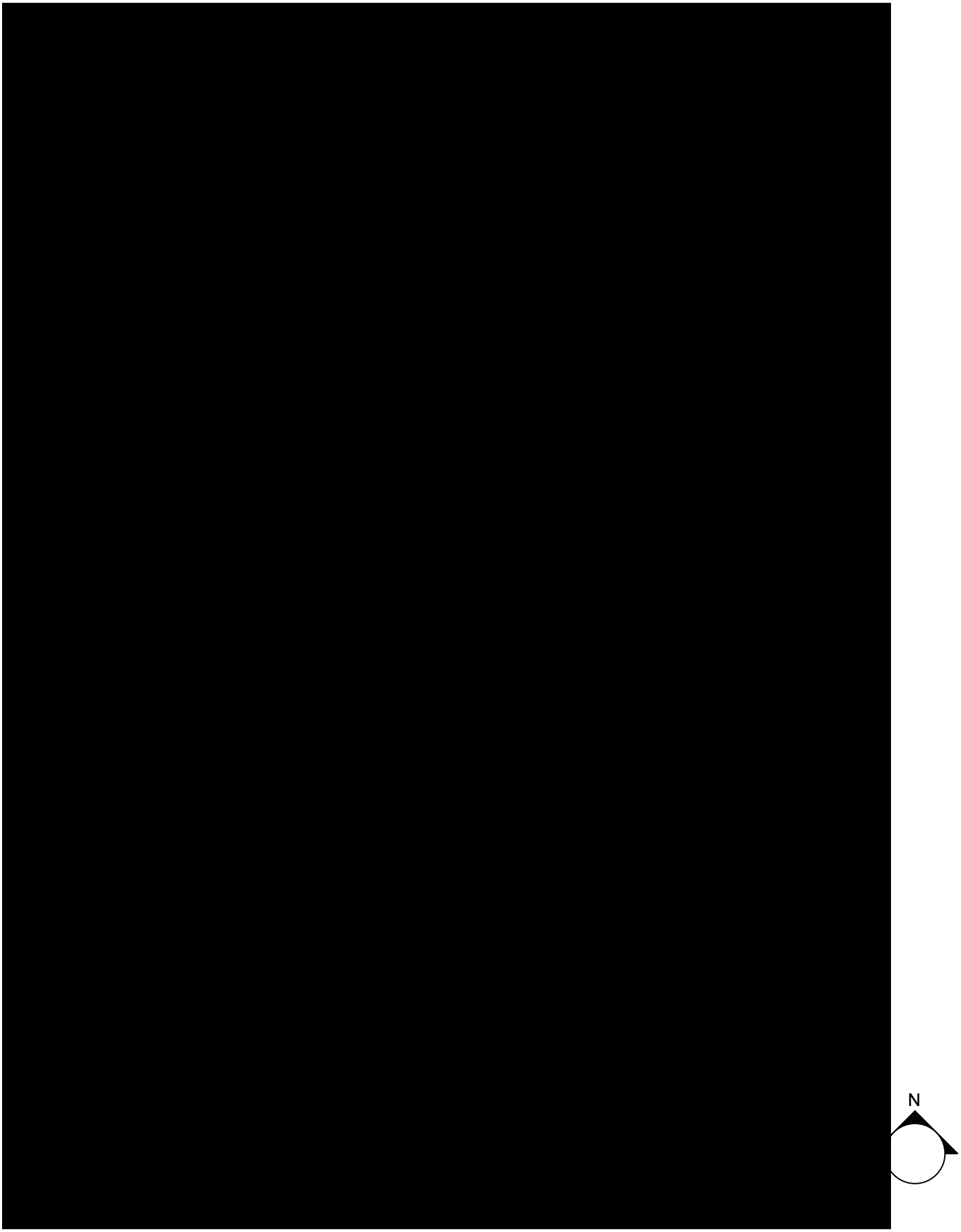

To Agenda

COMMUNITY BENEFITS

LONGITUDE DISTRIBUTION

To Agenda

Community Benefits

Longitude Management and its affiliate business, Elevation 2477', are proud of being a community centric enterprise. Since customer care and positive impact is at the ethos of our organization, we place priority on community engagement and benefit. The success of our business is reliant on the community we serve and partners we are able to attract.

Our values and principles will serve the neighborhood, and show that we are part of Nevada City.

- **Volunteer Time Off:** As with Elevation 2477' employees, we encourage involvement and participation in our neighborhood. Longitude Distribution provides every employee with two days of Volunteer Time Off (VTO) to volunteer at an organization of their choice in the community. The VTO policy results in additional money and manpower being donated to our local communities. The Longitude Distribution team will grow to up to 4 employees, this equates to 64 VTO hours.

- **Community support/improvements** - we will coordinate with Nevada City's local nonprofits to offer financial assistance and our staff for assistance with programs such as:

    - **SYRCL's "Growing Green" Educational Programs:** Continued financial support for SYRCL's educational programs through the Nevada County Cannabis Alliance to encourage sustainable cultivation practices.
    - **Adopt a Highway /Street** - we will adopt a local street and highway and provide our Community Crew to help maintain a clean and orderly environment for all to enjoy.
    - **SYRCL's River Cleanup**: Provide our team for SYRCL's annual river cleanup.
    - **Nevada City Spring Cleanup**: As part of the Volunteer Time Off program, Longitude Distribution will provide 8 volunteers for the city's annual spring cleanup.
    - **Neighborhood Cleanup:** Longitude Distribution employees will perform a two-block perimeter neighborhood clean up, where-by the staff walk the neighborhood streets with trash bags and trash pickers. Additionally, our employees will perform daily sweeps of surrounding vicinity and parking lots to ensure a litter-free zone. Longitude Distribution is committed to keeping the neighborhood clean and safe.
    - **Local food bank** - Because these types of organizations serve many local children, we thought it best to anonymously donate to an unnamed local food bank. We will offer collection hubs at the dispensary and participating businesses year round, including at our educational programs and workshops.
    - **Sponsorship of Nevada City Film Festival**
    - **Sponsorship of Nevada County Grown Activities and Events**
    - **Sponsorship of Paw and Order Dinner for the Rudiger Foundation**

- **Sponsorship**
- **Nevada City Chamber of Commerce Membership**

Economic Incentives

- **Local Employment:** Longitude Distribution will strive to secure qualified local applicants to fill all positions available, adhering to heightened pay and benefits outlined in our Labor & Employment plan.
- **Locally Grown, Locally Sourced:** Longitude Distribution will favor local purveyors, licensed and in compliance with local laws in an effort to fuel the local economy and the local cannabis industry.

Addressing Community Concerns

Longitude Distribution will establish and maintain procedures for working to support our community and to resolve community concerns/complaints about our operations. We are committed to keeping open communication between our customers and our staff, and neighbors and management. It is important for us to educate our neighbors and customers about the procedure for expressing concerns or dealing with complaints about our operations so that requests, questions, concerns and ideas are addressed in a positive manner and timely fashion.

A summary outline of the procedure is included for handling all issues described above:

- The information sent to all residents and businesses prior to opening will include a procedure of how to express concerns or file a complaint. This information will also be available in the store and all staff will be trained on how to proceed when a complaint or concern is expressed.
- The Community Outreach Manager's contact information will be provided to all businesses and residents within 100 feet of the facility. It shall also be posted at the store and on our website. All inquiries or complaints will be responded to within one working day, and a log will be kept by the Community Outreach Manager of all correspondence with the community. *Community Outreach Contact: Christina Rosemarin, Nevada City Resident and Longitude Distribution Board Member.*
- Longitude Distribution recognizes the importance of fully understanding a complainant's issues. Our team will take reasonable steps to understand the nature of the complaint by clarifying and seeking any additional information from the complainant.
- The Community Outreach Manager will respond via email, seek a face-to-face meeting, or an informal discussion over the phone. Complaints which raise particularly challenging issues or are otherwise especially complex will be investigated.
- Follow-up: After resolution of complaints, the Community Outreach Manager should follow-up with the complainant within one week to determine their level of satisfaction

with how their complaint was handled. These responses will be part of the records and reporting.

- Anonymous Complaints: These matters are assessed against the same criteria as any other complaints. When assessing complaints, particular considerations include the nature and complexity of the complaint, the quantity and quality of information and the capability of a productive outcome.

ENHANCED PRODUCT SAFETY

LONGITUDE DISTRIBUTION

To Agenda

Enhanced Product Safety

General Safety

Longitude Distribution is committed to being a role model business in the cannabis industry and has implemented standard operating procedures and practices that will exceed local Nevada City and state regulations in terms of product safety.

As a policy, we will only distribute cannabis products that are labeled and placed in a resealable, tamper-evident, child-resistant packaging and includes a unique Metrc identifier for the purposes of identifying and tracking cannabis and cannabis products.

In addition, we will only distribute cannabis products that are packaged and labeled in a way that is not attractive to children and in accordance with all state laws. All products must properly carry warning labels as required by state regulations as noted below:

- For packages containing only dried flower, the net weight of cannabis in the package.
- Identification of the source and date of cultivation, the type of cannabis or cannabis product and the date of manufacturing and packaging.
- The appellation of origin, if any.
- List of pharmacologically active ingredients, including, but not limited to, tetrahydrocannabinol (THC), cannabidiol (CBD), and other cannabinoid content, the THC and other cannabinoid amount in milligrams per serving, servings per package, and the THC and other cannabinoid amount in milligrams for the package total.
- A warning if nuts or other known allergens are used.
- Information associated with the unique identifier issued by the Department of Food and Agriculture.
- For a cannabis product sold at a retailer, the following statement must appear in bold: For flowers: "GOVERNMENT WARNING: THIS PACKAGE CONTAINS CANNABIS, A SCHEDULE I CONTROLLED SUBSTANCE. KEEP OUT OF REACH OF CHILDREN AND ANIMALS. CANNABIS MAY ONLY BE POSSESSED OR CONSUMED BY PERSONS 21 YEARS OF AGE OR OLDER UNLESS THE PERSON IS A QUALIFIED client. CANNABIS USE WHILE PREGNANT OR BREASTFEEDING MAY BE HARMFUL. CONSUMPTION OF CANNABIS IMPAIRS YOUR ABILITY TO DRIVE AND OPERATE MACHINERY. PLEASE USE EXTREME CAUTION."

For Cannabis products: "GOVERNMENT WARNING: THIS PRODUCT CONTAINS CANNABIS, A SCHEDULE I CONTROLLED SUBSTANCE. KEEP OUT OF REACH OF CHILDREN AND ANIMALS. CANNABIS PRODUCTS MAY ONLY BE POSSESSED OR CONSUMED BY PERSONS 21 YEARS OF AGE OR OLDER UNLESS THE PERSON IS A QUALIFIED client. THE INTOXICATING EFFECTS OF CANNABIS PRODUCTS MAY BE DELAYED UP TO TWO

HOURS. CANNABIS USE WHILE PREGNANT OR BREASTFEEDING MAY BE HARMFUL. CONSUMPTION OF CANNABIS PRODUCTS IMPAIRS YOUR ABILITY TO DRIVE AND OPERATE MACHINERY. PLEASE USE EXTREME CAUTION."

- Any other requirement set by the bureau or the State Department of Public Health.
- Only generic food names may be used to describe the ingredients in edible cannabis products.
- In the event the Attorney General determines that cannabis is no longer a Schedule I controlled substance under federal law, the label prescribed in subdivision shall no longer require a statement that cannabis is a Schedule I controlled substance.

Included in our employee handbook is also a policy that requires all inventory managers and employees to remind clients to store their products safely in a place unreachable by children and pets prior to every checkout.

Exhibit 1: Sample of Bag Which All cannabis Bought Leaves The Store In (all products)

>>> Trent to get this rendered with our logo on it and proper government disclosures and callouts.

Exhibit 2: Please just add a photo of the child resistant bags with Longitude Distribution Logo On it.

Products on the Floor and Online

We believe product safety extends beyond the packaging our clients leave the store with, and is also a critical element of the ongoing operations. Therefore, we have devised a stringent product safety plan for our distribution.

1. Display of Product

All cannabis products will be stored behind an enclosure and not readily accessible for clients to freely grab. This will ensure that each client must interact with an inventory manager prior to checking out and allows for an interactive discussion to make sure the client understands the effects of each particular cannabis, its benefits and what effects to expect, so they may pass that information onto their retail customers.

2. Showcasing Product

Purchasing cannabis is an interactive experience. clients have a wide variety of cannabis to choose from and want to see, smell and usually understand the components of dried flower prior to purchasing it. Since all of our bulk flowers will be behind the shelves, Longitude Distribution will use engineered Aroma E-POD (trademarked) which allows for clients to pull back the black tab to smell cannabis, has a built in magnifier to showcase the cannabis flowers, a tamper evident seal holds the top piece and the bottom piece to evade theft and the E-Pod is tethered to the display table with electric tether that has an audible alarm if someone tries to pull it off. Online sales will also be a portion of our distribution process and we'll work with qualified product placement photographers for clean, crisp, clear and accurate representations of the product for retail purchasers who are out of town.

Procurement of Product

All cannabis products offered in our distribution will be sourced from California state licensed farmers and manufacturers with a heavy emphasis on Nevada County local businesses. All cannabis flower, edibles, concentrates and ancillary products such as tinctures and salves will be tested and approved by a state licensed cannabis testing facility prior to distribution. All cannabis infused products will be

sourced from manufacturers whose products are regularly tested for compliance with state and local requirements.

Longitude Distribution is committed to ethical business practices and will not source or sell any product that is in violation of any state or local laws. All of our inventory will only ever come from legal sources within the state of California.

Testing Standards

According to state regulations all cannabis products must go through quality assurance, inspection and testing for the following items:

(A) Tetrahydrocannabinol (THC)
(B) Tetrahydrocannabinolic Acid (THCA)
(C) Cannabidiol (CBD)
(D) Cannabidiolic Acid (CBDA)
(E) The terpenes required by the bureau in regulation
(F) Cannabigerol (CBG).
(G) Cannabinol (CBN)
(H) Any other compounds or contaminants required by the bureau.
(I) Pesticides, That the presence of contaminants does not exceed the levels established by the bureau.
(J) Mold Spores
(K) Microbiological Impurities identified by the bureau

Longitude Distribution will verify and only source and sell products that have met or exceeded the state's stringent guidelines. We are aware that there will be a major imbalance of properly tested products available as the state licensing system is launched and retailers may suffer product shortages. Longitude Distribution anticipate this challenge and will properly regulate the amount of inventory on hand as the testing deadline approaches so we can ensure properly serving our clients.

INSERT CHILD RESISTANT PDF WITH COLOR CHANGE:
https://drive.google.com/drive/u/0/folders/0B2Mn3c-t3UF8NjMtSzZlRE5TUGs

ENVIRONMENTAL BENEFITS

LONGITUDE DISTRIBUTION

To Agenda

Environmental Benefits

Longitude Distribution is committed to working with the building owners and their neighbors in retrofitting its facility at 569 Searls Avenue with sustainable energy systems, using green building practices and natural resources efficiently, that can help the city achieve its goal of becoming a low-carbon community reliant on the efficient use of renewable energy resources. We plan to work with local contractors and providers to achieve this goal.

Our plan is to lower the impact on the environment by implementing the following practices:

- Solar energy system: Longitude Distribution in partnership with the property owners will install a solar energy system in three phases. This will result in a fully self-sufficient powered facility.

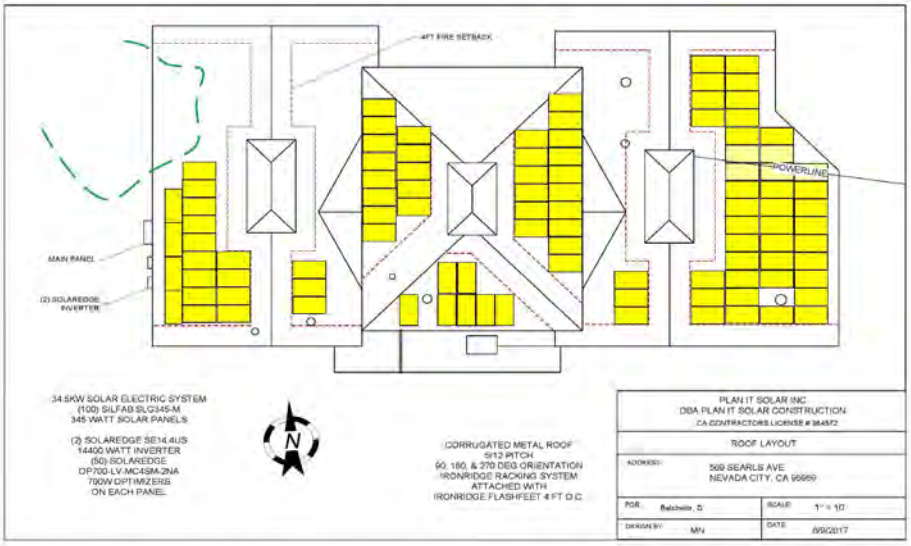

- Retrofitting the facility with water-efficient fixtures. Retrofitting one out of every 100 American homes with water-efficient fixtures could avoid about 80,000 tons of greenhouse gas emissions, which is the equivalent of removing 15,000 cars from the road for one year.
- LED lighting and motion sensing lights where applicable.
- Use of reclaimed materials in renovations.
- All appliances, including refrigerators, HVAC systems and any other electronic device will be energy efficient.
- Use of zero-VOC, or paints and finishes with low level toxic emissions for use on walls. Milk Paint, or zero-VOC paint, is environmentally safe and non-toxic.
- Reuse and Recycle programs:
    - Use of recycled paper and soy-based inks in marketing materials.
    - Use of recycled and recyclable disposable products for use by employees during their shifts.
    - Use of reusable child resistant bags for products.
- Native landscaping and drip irrigation system for outdoor environments.

- Zero ozone emissions odor mitigation system.
- We will abundantly use Solar Tubes which use the sun's natural light to power indoor environments with absolutely no electricity required

LABOR - EMPLOYMENT

LONGITUDE DISTRIBUTION

To Agenda

Employee Hiring Guidelines

Longitude Distribution strives to hire local, qualified residents. We provide a work environment that is safe for the employees, clients and the community by requiring all appropriate background checks and references and complying with local and state requirements.

All potential employees will undergo a background check and a vetting process that includes checking references before commencing work.

All potential employees are required to be legally authorized to do so under applicable state law. All employees will also have to obtain a work permit from the City prior to being trained and performing any tasks.

As part of the application process, all applicants will be required, but not limited, to provide the following information:

- Name, address, and phone number
- Age and verification: Copy of driver's license, birth certificate or other proof that the applicant is at least twenty-one (21) years of age.
- Previous employment references: Name, address, and contact person for at least three previous previous employers. If the applicant has been previously fired, resigned, or asked to leave, he or she must provide reasons for dismissal or firing.
- Three character references.
- A signed statement under penalty of perjury that the information provided is true and correct.
- Proof or verification that the applicant is a qualified patient or primary caregiver.
- Submit to two interviews with employers or site managers.

2. Employee Training Guidelines

Training of new employees will happen under the strict supervision of qualified managers and owners. Employees will be trained on their specific job responsibilities and corresponding procedures by the site Manager. All training must be completed before an employee can perform any task independently.

New employees are required to shadow a more experienced employee or manager for a period determined by the onsite Manager or their designee. Some tasks may require a longer shadowing period than others. The onsite Manager or their designee will determine whether additional training and shadowing is required for an employee.

At a minimum, all employees will receive training to include; safety and security, product and cannabis research knowledge, safe handling practices.

Upon completion of training, all employees are required to complete the Employee Acknowledgement page affirming that they received training and are comfortable performing

their assigned task.

A copy of the employee's signed acknowledgement will be maintained in the personnel files for accurate and current record keeping.

All employees must maintain the utmost ethical behavior and display good moral character.

In the event an employee is accused or convicted of a crime, he or she will be placed on leave until the outcome of such criminal procedures is final. Employees found to be convicted of a crime would be terminated immediately from employment.

[redacted]

[redacted]

4. Employee Security Staff

As part of the employee pool, Longitude Distribution will hire local security employees to assist the Security Manager with the performance and implementation of the Security Plan. Security staff will wear a distinct badge, act and address individuals in a formal manner, and continuously patrol when not on a fixed duty assignment.

5. Employee Log

For the safety and security of the premises surrounding the building, the building, its occupants, and products, the Security Manager will keep a current and accessible roster of all employees and ensure that all employees are aware of terminations or duty reassignments as they occur. All terminated employees or those not having valid agent cards shall be prohibited from being in, on or about the distribution facility.

6. Employee Termination

Upon termination of any employee, whether it be voluntary or involuntary, Longitude Distribution shall ensure that terminated employee's keys, tools and access codes and cards are returned, and ensure that such codes and access points are altered so as to prevent the terminated employees' access. Longitude Distribution shall notify the city and local law enforcement within ten (10) days after a cannabis establishment agent ceases to be employed by the facility.

6. The Team

- **Packagers (2 positions)**
  - Job Summary: Packagers will possess strong-to-excellent knowledge of cannabis products, and be able to create shipping manifests and orders while maintaining compliance with all state regulatory guidelines.
  - Salary: $15.00 to $25.00 /hour, depending on experience.
  - Duties/Responsibilities:
    - Adhere to strict distribution processes and maintain a professional and safe environment for clients and coworkers.
    - Gather and process required documents and information, and perform detailed verification while maintaining client confidentiality.
    - Continue to enhance knowledge of cannabis, and continually hone ability to explain and recommend products
    - Unpack, sort, count and label merchandise as directed, including items requiring special handling or refrigeration.
    - Maintain the professional appearance of the collective by restocking

        - merchandise on the sales floor and participating in basic store clean-up.
        - Perform clerical tasks including accurate filing, compiling, and maintaining inventory and records.
    - Skills & Qualifications:
        - Proper licenses, if necessary.
        - Experiences in stocking and inventory control preferred.
        - Knowledge of marijuana strains, (indicas, sativas, hybrids), edibles, extracts, and current products on the market.
        - distribution-related experience a plus.
        - Must be friendly, outgoing, trustworthy, dependable, and hardworking.
        - Must be able to provide exemplary customer service, and represent the business with pride;
        - Must be at least 21 years of age;
        - Must have no felony convictions;
        - Must comply with an extensive background check.

- **Distribution Manager (1 position)**
    - Job Summary: The distribution Manager ensures that all transactions and the implementation of other facility processes comply with state and local laws and regulations and that service exceeds customer expectations. The distribution Manager collaborates to develop and implement practices, policies, and strategies that support a performance and results-driven culture. The distribution Manager reports to the Corporate officers and board of directors.
    - Salary: $42k-$62k per year.
    - Duties/Responsibilities:
        - Ensures accuracy and compliance in all transactions
        - Performs the required duties to record all sales and inventory transactions in accordance with state and local laws and regulations.
        - Maintains established standards of presentation, customer service, and compliance.
        - Coordinates with the Executive Management Team to ensure all employees have accurate, up-to-date knowledge and materials related to their position.
        - Communicates the details of daily operations to the Executive Management Team
        - Implements and oversees procedures related to opening and closing of the retail store.
        - Participates in the recruiting, training, development and success of employees.
        - Stays informed and knowledgeable about state and local laws, regulations and industry news.

        - Facilitates ordering of cannabis infused products (concentrates, vaporizer, topicals and edibles), clothing and accessories.
        - Performs inventory reconciliations daily, weekly and as needed
        - Additional duties as requested.
    - Skills & Qualifications:
        - Proper licenses, if necessary
        - Three years in progressively responsible retail experience, including at least one year in a management position;
        - Ability to manage a team of staff members at a time during normal business hours in a fast paced, heavily regulated environment;
        - Experience in inventory management and reconciliation;
        - Excellent oral and written communication skills;
        - Proficient computing skills
        - Innate desire to achieve success and a work ethic to match
        - High level of integrity;
        - Degree in business, management, or related areas, preferred;
        - Experience working in a heavily regulated industry, preferred.
    - Working Conditions/Physical Requirements:
        - The distribution Manager regularly works evenings, weekends, and holidays to meet the needs of our retail setting;
        - Successful performance of this role requires that the incumbent is physically able to move freely between different parts of the store, lift up to 30 pounds;
        - Spend several hours a day viewing a computer screen.

- **Driver (2 positions)**
    - Job Description: The position of driver is to deliver inventory to licensed retailers per Nevada City and State of CA requirements, and generally assisting where needed. The Driver is the front line and first to greet clients, and therefore a friendly and welcoming personality is key.
    - Salary: $25.00 to $35.00 /hour
    - Requirements:
        - Must be highly organized
        - Excellent telephone skills
        - Understanding of Delivery methods and Manifest recording
        - A high degree of initiative and self-motivation
        - Have knowledge of social media (Weed Maps and Leafly a plus)
        - Excellent Communication
        - Attention to Detail
        - Multi-task Oriented
        - Stress Management/Composure
        - Some college education, 4-year degree (or beyond) preferred
        - Must submit and pass a Department of Criminal Justice criminal background check

    - Must be 21 years or older
    - Must Have a valid California Drivers License
    - Must have no felony convictions;
  - Cannabis distribution or other cannabis industry related: 1 year

LOCAL ENTERPRISE

LONGITUDE DISTRIBUTION

To Agenda

Local Enterprise

The Longitude Distribution team has deep roots in Nevada County and a prove track record of running compliant cannabis businesses.

Founder and CEO Daniel Batchelor has seen Nevada County change and grow in the over two decades he has resided here. He attended Nevada City School of the Arts, Bear River High School and Sierra College. For Daniel, Nevada City represents the county seat and the epicenter of social, cultural and entrepreneurial life in Nevada County.

Jonathan Hogander is a former Portland resident who couldn't resist the allure of the Sierra Foothills. He moved his wife and three kids to Nevada County in 2013, when they found local Waldorf Schools for their daughters and fell in love with the Nevada City/Grass valley area. Lack of local regulations has sent Jonathan on the road to advice and seek business opportunities in regulated counties and states. So when the opportunity of opening a permitted and regulated cannabis business in his hometown, he immediately became involved.

Daniel and Jonathan, whose families have been friends for 10 years, were fatigued with traveling and consulting businesses in other areas. So it was with a deep desire to bring their expertise home, fuel the local economy and developed a future for the cannabis industry in Nevada County that the concept for Elevation 2477', the existing licensed dispensary, was formed. A year later and clogs in the distribution avenues for locals has spawned the proposal of Longitude Distribution.

In addition to these principals, Longitude Distribution will draw exclusively from the cities of Nevada City, Grass Valley, Unincorporated Nevada County, and Truckee for the remainder of its managers. Also, to the extent practicable, we will also draw the remainder of the staff locally, with a goal of a majority of hires coming from Nevada County.

Since Longitude Distribution was just an idea, the team has considered how many small businesses surround our everyday lives. It was with that in mind, and impressed with the amount of time, commitment and labor these hard working businesses contribute to our local economy, that our team began engaging local professionals to bring our vision to life. For us, this is the opportunity for local success stories to become role models for others.

Here is some of the local professionals who have helped bring this project to you:

- Laurel Durland: Interior Designer, Grass Valley, CA
- Juniper Lindquist: Graphic Designer, Nevada City, CA
- Richard Baker: Siteline Architecture, Grass Valley, CA
- Maria Herrera: Branding and Communications Strategist, Nevada City, CA

Longitude Distribution has already used the services of local businesses such as locksmiths, cleaners and plumbers.

Longitude Distribution will continue to support the efforts of local advocacy organizations to establish a licensed and regulated cannabis industry in Nevada County that will allow us to source all of our cannabis products locally from licensed local farmers and manufacturers.

QUALIFICATIONS OF PRINCIPALS

LONGITUDE DISTRIBUTION

To Agenda

Qualifications of Principals

Corporate Officers/Board of Directors:

The Board of Directors will be heavily involved in the day-to-day operations of Longitude Distribution ensuring the highest excellence in services, regulatory compliance, and safety and security. They will be in charge of implementing all standard operating procedures, periodically reviewing and updating plans and examining financial projections and reports. Both board directors are well-versed in different aspects of the cannabis industry and together comprise the ideal leadership team for the first distribution facility in Nevada City.

Daniel Batchelor, Chief Executive Officer, Grass Valley, CA : With a background in business development and consulting, and a successful track record as CEO of Elevation 2477', Daniel is positioned to expand into his own distribution facility. Daniel has been a local resident since 1991, when his family moved to the area from Santa Cruz. Since attending San Diego State University, Daniel has gained extensive knowledge of the cannabis industry in California, first by opening his own dispensary in the San Diego area in 2009, and then successfully winning the only dispensary license in Nevada City. Since opening the doors of Elevation 2477' in August 2018, Daniel has been able to build important relationships with statewide product makers, farmers and distribution companies, gaining him the unique knowledge to successfully broker relationships between consumers and cannabis product providers that benefit both parties. He continues to be involved in the development of local cannabis policy as Executive Board member of the Nevada County Cannabis Alliance and actively participates in the local philanthropic community. His love for Nevada County led him to get involved with local organizations such as the Nevada City Chamber of Commerce.

Jonathan Hogander, Chief Financial Officer/Chief Operating Officer, Auburn, CA : Jonathan Hogander will be acting as CFO/COO for Longitude Management LLC as well as CFO for Elevation 2477. Jonathan has long been apart of the cannabis community, as a client since 2002, and as an activist and advocate for cannabis rights. Jonathan has resided in Nevada County since 2013, when he was in search of a school for his daughters that was in alignment with his idea of a balanced early childhood education. After finding the Live Oak Waldorf School in Meadow Vista he discovered Grass Valley and made it his home with his wife and three daughters. Jonathan has extensive and recreational dispensary knowledge and experience. Currently his companies hold 10 Oregon Liquor Control Commission (OLCC) Licensed Marijuana Retail Licenses; four (4) OLCC Licensed Marijuana Producer Licenses, and a Wholesale license. Additionally, Jonathan recently received the first Type 7 Volatile Manufacturer license in the City of Davis, California and is acting CEO/President for Blessed Extracts along with a Type 11 Distribution license. As a current cannabis business operator, Jonathan has gained extensive knowledge of Franwell Metrc Cannabis Tracking System (CTS), which is used for seed-to-sale tracking of cannabis products in Oregon and is currently using

metrc in California at both Blessed Extracts and Elevation 2477. His educational background includes a degree from Cal Poly – San Luis Obispo in mechanical engineering in 2008 (magna cum laude). Before Jonathan's cannabis business career he had experience working as a senior mechanical design engineer and product manager in several companies including Microsoft and Sony Electronics.

STATE OF CALIFORNIA
BCIA 8016
(orig. 04/2001; rev. 01/2011)

LML-D-109

DEPARTMENT OF JUSTICE

REQUEST FOR LIVE SCAN SERVICE

[redacted]

To Agenda

STATE OF CALIFORNIA
BCIA 8016
(orig. 04/2001; rev. 01/2011)

DEPARTMENT OF JUSTICE

REQUEST FOR LIVE SCAN SERVICE

[redacted]

To Agenda

[redacted]

To Agenda

FINANCIALS

LONGITUDE DISTRIBUTION

To Agenda

LML-D-115

LML-D-116

[redacted]

To Agenda

To Agenda

[redacted]

To Agenda

[redacted]

10034790202000000062

To Agenda

[redacted]

To Agenda

PROPERTY LEASE

LONGITUDE DISTRIBUTION

To Agenda

LEASE AGREEMENT

THIS LEASE AGREEMENT (this "**Lease**") is made 9/30/2019, between NC ACQUISITION 569, LLC, a California limited liability company ("**Landlord**"), and Longitude Management, LLC, a [California] limited liability company ("**Tenant**").

BASIC LEASE TERMS

1. Address of Premises: 569 Searls Avenue, Suite B, Nevada City, CA 95959

2. Premises: Those certain premises located in the building (the "**Building**") having an address of 569 Searls Avenue, Nevada City, CA 95959; the Premises are depicted on the Floor Plan set forth on **Exhibit A**.

3. Project: The real property on which the Building in which the Premises are located, together with parking areas, landscaped areas and all other improvements thereon and appurtenances thereto as depicted on **Exhibit B**.

4. Base Rent: Monthly installments of Base Rent will be in the amounts set forth below:

Period	Monthly Base Rent
10.1.19 - 7.31.20	$3,600
8.1.20 - 7.31.21	$3,708
8.1.21 – 7.31.22	$3,819.24
8.1.22 – 7.31.23	$3,933.82

* For purposes of this Lease, a "**Lease Year**" shall be defined as that twelve (12) month period during the initial three (3) year and ten (10) month term (the "Original Term") commencing on the Rent Commencement Date or the annual anniversary thereof, as may be applicable.

** See Section 5 of this Lease regarding application of Security Deposit to Base Rent upon issuance of the Certificate of Occupancy (or its equivalent) to Tenant.

5. Square Footage of Premises: Approximately 1,800 square feet.

6. Square Footage of Project: Approximately 8,100 sq. ft.

7. Tenant's Share of Operating Expenses: 22.22% (see Section 3(b) and Section 4(b))

8. Delivery Date: This shall be the same date as the Rent Commencement Date, subject to the terms of Item 9 below.

9. Rent Commencement Date: October 1st, 2019

10. Security Deposit: $3,600 (see Section 5)

11. Tenant's Initial Estimated Monthly Operating Expenses for Lease Year 1: $1,116, subject to adjustment and reconciliation.

12. Term: Beginning on the Rent Commencement Date and ending three (3) years and ten (10) months from the first day of the first full month following the Rent Commencement Date, subject to Tenant's right to extend pursuant to Section 40. The Original Term and any Option Terms are collectively

LEASE AGREEMENT

THIS LEASE AGREEMENT (this "**Lease**") is made 9/30/2019, between NC ACQUISITION 569, LLC, a California limited liability company ("**Landlord**"), and Longitude Management, LLC, a [California] limited liability company ("**Tenant**").

BASIC LEASE TERMS

1. Address of Premises: 569 Searls Avenue, Suite B, Nevada City, CA 95959

2. Premises: Those certain premises located in the building (the "**Building**") having an address of 569 Searls Avenue, Nevada City, CA 95959; the Premises are depicted on the Floor Plan set forth on **Exhibit A**.

3. Project: The real property on which the Building in which the Premises are located, together with parking areas, landscaped areas and all other improvements thereon and appurtenances thereto as depicted on **Exhibit B**.

4. Base Rent: Monthly installments of Base Rent will be in the amounts set forth below:

Period	Monthly Base Rent
10.1.19 - 7.31.20	$3,600
8.1.20 - 7.31.21	$3,708
8.1.21 – 7.31.22	$3,819.24
8.1.22 – 7.31.23	$3,933.82

* For purposes of this Lease, a "**Lease Year**" shall be defined as that twelve (12) month period during the initial three (3) year and ten (10) month term (the "Original Term") commencing on the Rent Commencement Date or the annual anniversary thereof, as may be applicable.

** See Section 5 of this Lease regarding application of Security Deposit to Base Rent upon issuance of the Certificate of Occupancy (or its equivalent) to Tenant.

5. Square Footage of Premises: Approximately 1,800 square feet.

6. Square Footage of Project: Approximately 8,100 sq. ft.

7. Tenant's Share of Operating Expenses: 22.22% (see Section 3(b) and Section 4(b))

8. Delivery Date: This shall be the same date as the Rent Commencement Date, subject to the terms of Item 9 below.

9. Rent Commencement Date: October 1st, 2019

10. Security Deposit: $3,600 (see Section 5)

11. Tenant's Initial Estimated Monthly Operating Expenses for Lease Year 1: $1,116, subject to adjustment and reconciliation.

12. Term: Beginning on the Rent Commencement Date and ending three (3) years and ten (10) months from the first day of the first full month following the Rent Commencement Date, subject to Tenant's right to extend pursuant to Section 40. The Original Term and any Option Terms are collectively

referred to herein as the "Term."

13. Permitted Use: Tenant shall use the Premises for Type 11 Distribution, as deemed a lawful purpose pursuant to Nevada City Medical Cannabis Business Ordinance No. 2017-06, and in accordance with applicable rules, regulations and any other applicable laws, ordinances and governmental requirements. Tenant shall otherwise use the Premises in compliance with the provisions of Section 6 hereof. Tenant shall only have the right to use and occupy the Premises for the Agreed Use only. Tenant may not use the Premises for any other purpose without Landlord's prior written consent, which may be withheld in Landlord's sole discretion.

14. Addresses:

Landlord's Address:
c/o SBMI Group
1253 University Avenue, Suite 1002
San Diego, CA 92103
Telephone: (858) 332-2480
Email: quincy@sbmigroup.com
Attn: Quincy Hilla

Address for Landlord's Attorney:
Susan E. Lamson, Esq.
Kimball, Tirey and St. John
7676 Hazard Center Drive, Suite 900-B
San Diego, CA 92108
Phone (Direct) 619.881.4893
Susan.Lamson@kts-law.com

Tenant's Notice Address:
LONGITUDE MANAGEMENT, LLC
569 Searls Avenue, Suite B
Nevada City, CA 95959

15. Amount Due on Tenant's Execution of Lease: $3,600 (one monthly installment of Base Rent), to be used for the Security Deposit.

16. Exhibits: The following Exhibits and Addenda are attached hereto and incorporated herein by this reference:

[X] **EXHIBIT A** – FLOOR PLAN
[X] **EXHIBIT B** – WORK LETTER
[X] **EXHIBIT C** – RENT COMMENCEMENT DATE
[X] **EXHIBIT D** - RULES AND REGULATIONS
[X] **EXHIBIT E** – GUARANTY

1. Lease of Premises. Upon and subject to all of the terms and conditions hereof, Landlord hereby leases the Premises to Tenant and Tenant hereby leases the Premises from Landlord. The portions of the Project which are for the non-exclusive use of tenants of the Project are collectively referred to herein as the "**Common Areas.**" Landlord reserves the right to modify Common Areas, provided that such modifications do not materially adversely affect Tenant's use of the Premises for the Permitted Use.

2. Delivery; Acceptance of Premises.

(a) Tenant shall have the right to non-exclusive early possession of the Premises ("**Early Possession**") from the date of the mutual execution of the Lease until the Delivery Date, for the purpose of preparing the space plans, obtaining required governmental approvals and building permits, and, to the extent permitted by Landlord, constructing the initial tenant improvements ("**Tenant's Work**") in the Premises and installing Tenant's fixtures, furniture and equipment, if Landlord determines, in its sole and absolute discretion, that Early Possession is feasible and will not interfere with Landlord's Work or delay the Delivery Date. Tenant shall provide proof of insurance coverage as required under the Lease prior to such Early Possession. Tenant shall not interfere with Landlord's construction activities and shall abide by all terms of the Lease (except for the payment of Rent, unless Tenant commences business operations) during such period of Early Possession. If Landlord fails to timely Deliver the Premises, Landlord shall not be liable to Tenant for any loss or damage resulting therefrom, and this Lease shall not be void or

voidable. As used herein, the terms "**Landlord's Work**," "**Tenants' Work**," "**Tenant Delays**" and "**Substantially Completed**" or substantially complete shall have the meanings set forth for such terms in this Lease and the Work Letter.

(b) Upon request of Landlord, Tenant shall execute and deliver a written acknowledgment of the Delivery Date, the Rent Commencement Date and the expiration date of the Term when such are established, in the form of the "Acknowledgement of Delivery Date" attached to this Lease as **Exhibit D**; provided, however, Tenant's failure to execute and deliver such acknowledgment shall not affect Landlord's rights hereunder.

(c) Except as may be expressly set forth in the Work Letter: (i) Tenant shall, as of the Delivery Date, accept the Premises in their cold shell condition, (ii) Landlord shall have no obligation for any defects in the Premises except with respect to the foundation, the roof and the exterior walls; and (iii) Tenant's taking possession of the Premises shall be conclusive evidence that Tenant accepts the Premises and that the Premises were in good condition at the time possession was taken. Any occupancy of the Premises by Tenant before the Delivery Date shall be subject to all of the terms and conditions of this Lease.

(d) Except as expressly set forth in this Lease, Tenant agrees and acknowledges that neither Landlord nor any agent of Landlord has made any representation or warranty with respect to the condition of all or any portion of the Premises or the Project, and/or the suitability of the Premises or the Project for the conduct of Tenant's business, and Tenant waives any implied warranty that the Premises or the Project are suitable for the Permitted Use. This Lease constitutes the complete agreement of Landlord and Tenant with respect to the subject matter hereof and supersedes any and all prior representations, inducements, promises, agreements, understandings and negotiations which are not contained herein. Landlord in executing this Lease does so in reliance upon Tenant's representations, warranties, acknowledgments and agreements contained herein.

(e) All work to be done in the Premises shall be provided by Tenant at Tenant sole cost and expense (the "**Tenant's Work**"). Tenant's Work shall include, but shall not be limited to, all leasehold improvements, fixtures, equipment and personal property necessary for Tenant to open from the Premises for the Permitted Use. The plans for Tenant's Work shall be subject to Landlord's prior written approval, not to be unreasonably withheld.

(f) Applicable laws, covenants or restrictions of record, regulations and ordinances will be referred to hereafter as "**Applicable Requirements**." Landlord makes no representations or warranties regarding the compliance or noncompliance of the Premises to Applicable Requirements as of the Start Date; Tenant is responsible for investigating this and has been advised to complete this investigation before signing this Lease.

(g) Landlord shall have the right to terminate this Lease, upon delivery of thirty (30) days' written notice to Tenant, if (i) Tenant's use of the Premises results in legal action, or a code, zoning or similar violation notice, or if any civil, administrative, or criminal prosecution, is initiated against Tenant or Landlord because of Tenant's use of the Premises; or (ii) any federal, state, or local forfeiture proceeding against the Premises has been initiated or is pending.

3. Rent.

(a) **Base Rent**. The Security Deposit shall be due and payable on delivery of an executed copy of this Lease to Landlord. Commencing on the Rent Commencement Date and on the first day of each calendar month thereafter during the Term, Tenant shall pay to Landlord in advance, without demand, abatement, deduction or set-off, monthly installments of Base Rent in lawful money of the United States of America, at the office of Landlord for payment of Rent set forth above, or to such other person or at such other place as Landlord may from time to time designate in writing. Payments of Base Rent for any fractional calendar month shall be prorated. The obligation of Tenant to pay Base Rent and other sums to Landlord and the obligations of Landlord under this Lease are independent obligations.

Tenant shall have no right at any time to abate, reduce, or set-off any Rent (as defined in Section 4(h) below) due hereunder except for any abatement as may be expressly provided in this Lease.

(b) **Additional Rent.** In addition to Base Rent, Tenant agrees to pay to Landlord as additional rent ("**Additional Rent**"): (i) Tenant's Share of "Operating Expenses" (as defined in Section 4(b)), and (ii) any and all other amounts Tenant assumes or agrees to pay under the provisions of this Lease, including, without limitation, any and all other sums that may become due by reason of any default of Tenant or failure to comply with the agreements, terms, covenants and conditions of this Lease to be performed by Tenant, after any applicable notice and cure period. As used in this Lease, the term "**Tenant's Share**" shall be equal to a fraction, the numerator of which shall be the number of square feet of floor area in the Premises and the denominator of which shall be the number of square feet of floor area in the Project. It is the intention of Landlord and Tenant that the Base Rent and Additional Rent to be paid hereunder shall be paid to Landlord absolutely net without deduction of any amount of any nature whatsoever, and that all expenses incurred by Landlord shall be subject to the obligation by Tenant of reimbursement to Landlord, except as otherwise expressly and specifically provided in this Lease.

4. Operating Expense Payments.

(a) Landlord shall deliver to Tenant a written estimate of Operating Expenses for each calendar year during the Term (the "**Annual Estimate**"), which may be revised by Landlord from time to time during such calendar year. During each month of the Term, on the same date that Base Rent is due, Tenant shall pay Landlord an amount equal to 1/12th of Tenant's Share of the Annual Estimate. Payments for any fractional calendar month shall be prorated.

(b) The term "**Operating Expenses**" means all costs and expenses incurred by Landlord in operating, managing, insuring, repairing, replacing and maintaining the Common Areas, the exterior walls, the roofs of the buildings, the utility facilities and systems not exclusively serving the premises of any tenant, insuring the Project as required hereunder, Common Area lighting fixtures, Project sign monuments or pylons and directional signage, the costs of complying with local, state and federal laws relating to the Common Areas, and such related costs of any kind or description whatsoever incurred or accrued each calendar year by Landlord with respect to the Project including but not limited to the following:

(i) The operation, repair and maintenance, in neat, clean, good order and condition , and if necessary the replacement, of the following:

(A) The Common Areas and Common Area improvements, including parking areas, loading and unloading areas, trash areas, roadways, parkways, walkways, driveways, landscaped areas, bumpers, irrigation systems, Common Area lighting facilities, fences and gates, stairs, roofs, exterior walls of the buildings and roof drainage systems.

(B) Exterior signs and any tenant directories.

(C) Any fire sprinkler systems.

(D) All other areas and improvements that are within the exterior boundaries of the Project but outside of the Premises and/or any other space occupied by a tenant.

(ii) The cost of water, gas, electricity and telephone to service the Common Areas and any utilities not separately metered.

(iii) The cost of trash disposal, pest control services, property management, security services, owners' association dues and fees, the cost to repaint the exterior of any structures and the cost of any environmental inspections.

(iv) Reserves set aside for maintenance, repair and/or replacement of Common Area improvements and equipment.

(v) Taxes (as defined in Section 8).

(vi) The cost of the premiums for the insurance maintained by Landlord pursuant to Section 16.

(vii) Any deductible portion of an insured loss concerning the Building or the Common Areas.

(viii) Auditors', accountants' and attorneys' fees and costs related to the operation, maintenance, repair and replacement of the Project.

(ix) The cost of any capital expenditure to the Building or the Project, provided; however, that Landlord shall allocate the cost of any such capital expenditure over a 12 year period and Tenant shall not be required to pay more than Tenant's Share of 1/144th of the cost of such capital expenditure in any given month. In no event, however, shall Tenant be responsible for the cost, as part of Tenant's Share of Common Area Operating Expenses, of initial construction or restoration performed by Landlord prior to the Rent Commencement Date of the Buildings or the Common Areas. As used herein, the term "capital expenditures" means expenditures which, in accordance with generally accepted accounting principles, are not fully chargeable to current expense in the year the expenditure is incurred.

(x) The cost of any other services to be provided by Landlord that are stated elsewhere in this Lease to be a Common Area Operating Expense.

(c) Any Common Area Operating Expenses and Taxes that are specifically attributable to the Unit, the Building or to any other building in the Project or to the operation, repair and maintenance thereof, shall be allocated entirely to such Unit, Building, or other building. However, any Common Area Operating Expenses and Taxes that are not specifically attributable to the Building or to any other building or to the operation, repair and maintenance thereof, shall be equitably allocated by Landlord to all buildings in the Project.

(d) The inclusion of the improvements, facilities and services set forth in Section 4(b) shall not be deemed to impose an obligation upon Landlord to either have said improvements or facilities or to provide those services unless the Project already has the same, Landlord already provides the services, or Landlord has agreed elsewhere in this Lease to provide the same or some of them.

(e) Tenant's Share of Common Area Operating Expenses is payable monthly on the same day as the Base Rent is due hereunder. The amount of such payments shall be based on Landlord's estimate of the annual Common Area Operating Expenses. Within 60 days after written request (but not more than once each year) Landlord shall deliver to Tenant a reasonably detailed statement showing Tenant's Share of the actual Common Area Operating Expenses for the preceding year. If Tenant's payments during such year exceed Tenant's Share, Landlord shall credit the amount of such over-payment against Tenant's future payments. If Tenant's payments during such year were less than Tenant's Share, Tenant shall pay to Landlord the amount of the deficiency within 10 days after delivery by Landlord to Tenant of the statement.

(f) Common Area Operating Expenses shall not include any expenses paid by any tenant directly to third parties, or as to which Landlord is otherwise reimbursed by any third party, other tenant, or insurance proceeds.

(g) Within 90 days after the end of each calendar year (or such longer period as may be reasonably required), Landlord shall furnish to Tenant a statement (an "**Annual Statement**") showing in reasonable detail: (a) the total and Tenant's Share of actual Operating Expenses for the previous calendar year, and (b) the total of Tenant's payments in respect of Operating Expenses for such year. If Tenant's Share of actual Operating Expenses for such year exceeds Tenant's payments of Operating

Expenses for such year, the excess shall be due and payable by Tenant as Rent within 30 days after delivery of such Annual Statement to Tenant. If Tenant's payments of Operating Expenses for such year exceed Tenant's Share of actual Operating Expenses for such year Landlord shall pay the excess to Tenant within 30 days after delivery of such Annual Statement, except that after the expiration, or earlier termination of the Term or if Tenant is delinquent in its obligation to pay Rent, Landlord shall pay the excess to Tenant after deducting all other amounts due Landlord.

(g) The Annual Statement shall be final and binding upon Tenant unless Tenant, within 60 days after Tenant's receipt thereof, shall contest any item therein by giving written notice to Landlord, specifying each item contested and the reason therefor. Operating Expenses for the calendar years in which Tenant's obligation to share therein begins and ends shall be prorated. Notwithstanding anything set forth herein to the contrary, if the Project is not at least 95% occupied on average during any year of the Term, Tenant's Share of Operating Expenses for such year shall be computed as though the Project had been 95% occupied on average during such year.

(h) Any square footage information provided in this Lease or stated elsewhere for the Premises is an approximate square footage and not necessarily an accurate or exact square footage calculation for the Premises. Base Rent is determined by the premises in the Project, and not by square footage. Base Rent will not be adjusted in the event Tenant determines that the square footage calculation for the Premises was incorrect. The measurement provided for in this Lease shall conclusively be deemed to be the square footage of the Premises and shall not be subject to further re-measurement, either by Landlord or Tenant. Tenant's Share of Operating Expenses shall be subject to adjustment only for changes in the physical size of the Premises or the Project occurring thereafter. Landlord may equitably increase Tenant's Share of Operating Expenses for any item of expense or cost reimbursable by Tenant that relates to a repair, replacement, or service that benefits only the Premises or only a portion of the Project that includes the Premises or that varies with occupancy or use. Base Rent, Tenant's Share of Operating Expenses and all other amounts payable by Tenant to Landlord hereunder are collectively referred to herein as "**Rent**."

5. Security Deposit. Tenant shall deposit with Landlord, upon delivery of an executed copy of this Lease to Landlord, a security deposit (the "**Security Deposit**") for the performance of all of Tenant's obligations hereunder in the amount set forth on page 1 of this Lease. The Security Deposit shall be held by Landlord as security for the performance of Tenant's obligations under this Lease. The Security Deposit is not an advance rental deposit (except as set forth in the last sentence of this Section 5) or a measure of Landlord's damages in case of Tenant's default. Upon each occurrence of a Default (as defined in Section 19), Landlord may use all or any part of the Security Deposit to pay delinquent payments due under this Lease, future rent damages under California Civil Code Section 1950.2, and the cost of any damage, injury, expense or liability caused by such Default, without prejudice to any other remedy provided herein or provided by law. Landlord's right to use the Security Deposit under this Section 5 includes the right to use the Security Deposit to pay future rent damages following the termination of this Lease pursuant to Section 20(c) below. Upon any use of all or any portion of the Security Deposit, Tenant shall pay Landlord on demand the amount that will restore the Security Deposit to the amount set forth on Page 1 of this Lease. Tenant hereby waives the provisions of any law, now or hereafter in force, including, without limitation, California Civil Code Section 1951.7, which provide that Landlord may claim from a security deposit only those sums reasonably necessary to remedy defaults in the payment of Rent, to repair damage caused by Tenant or to clean the Premises, it being agreed that Landlord may, in addition, claim those sums reasonably necessary to compensate Landlord for any other loss or damage, foreseeable or unforeseeable, caused by the act or omission of Tenant or any officer, employee, agent or invitee of Tenant, and further waives any protections afforded by California Civil Code §1950.7 (1) prohibiting application of the Security Deposit to future damages and (2) establishing deadlines of less than 90 days for return of the security deposit. It is the intention of the parties that Landlord can apply the security deposit to future damages (or any other amount due from Tenant to Landlord), and to provide Landlord with an adequate time period to determine those damages. The Security Deposit shall be deemed to be applied first to the payment of Rent and other charges due Landlord for periods prior to the filing of such proceedings. Upon any such use of all or any portion of the Security Deposit, Tenant shall, within 5 days after demand from Landlord, restore the Security Deposit to its original amount. If Tenant shall fully perform every provision of this Lease to be performed by Tenant,

the Security Deposit, or any balance thereof (i.e., after deducting therefrom all amounts to which Landlord is entitled under the provisions of this Lease), shall be returned to Tenant (or, at Landlord's option, to the last assignee of Tenant's interest hereunder) within 90 days after the expiration or earlier termination of this Lease. If Landlord transfers its interest in the Project or this Lease, Landlord shall either (a) transfer any Security Deposit then held by Landlord to a person or entity assuming Landlord's obligations under this Section 5, or (b) return to Tenant any Security Deposit then held by Landlord and remaining after the deductions permitted herein. Upon such transfer to such transferee or the return of the Security Deposit to Tenant, Landlord shall have no further obligation with respect to the Security Deposit, and Tenant's right to the return of the Security Deposit shall apply solely against Landlord's transferee. The Security Deposit is not an advance rental deposit (except as set forth in the last sentence of this Section 5) or a measure of Landlord's damages in case of Tenant's default. Landlord's obligation respecting the Security Deposit is that of a debtor, not a trustee, and no interest shall accrue thereon. Notwithstanding anything herein to the contrary, upon the issuance by the City of the Certificate of Occupancy (or its equivalent) to Tenant, and upon Tenant delivering a copy thereof to Landlord, Tenant shall not be required to pay the next two (2) monthly installments of Base Rent otherwise due under this Lease, and Landlord shall deduct the amount of such two (2) monthly installments of Base Rent from the Security Deposit.

6. Use.

(a) The Premises shall be used solely for the Permitted Use set forth in the basic lease provisions on page 1 of this Lease, and in compliance with all laws, orders, judgments, ordinances, regulations, codes, directives, permits, licenses, covenants and restrictions now or hereafter applicable to the Premises, and to the use and occupancy thereof, including, without limitation, the Americans With Disabilities Act, 42 U.S.C. § 12101, et seq. (together with the regulations promulgated pursuant thereto, "**ADA**") (collectively, "**Legal Requirements**" and each, a "**Legal Requirement**"). Correction of any non-compliance will be the obligation of Tenant at Tenant's sole cost and expense. Tenant is responsible for determining whether or not the Applicable Requirements and especially the zoning are appropriate for Tenant's intended use, and acknowledges that past uses of the Premises may no longer be allowed. Tenant will not use or permit the Premises to be used for any purpose or in any manner that would void Tenant's or Landlord's insurance, increase the insurance risk, or cause the disallowance of any sprinkler or other credits. Tenant shall not permit any part of the Premises to be used as a "place of public accommodation", as defined in the ADA or any similar legal requirement. Tenant shall reimburse Landlord promptly upon demand for any additional premium charged for any such insurance policy by reason of Tenant's failure to comply with the provisions of this Section or otherwise caused by Tenant's use and/or occupancy of the Premises. Tenant will use the Premises in a careful, safe and proper manner and will not commit or permit waste, overload the floor or structure of the Premises, subject the Premises to use that would damage the Premises or obstruct or interfere with the rights of Landlord or other tenants or occupants of the Project, including conducting or giving notice of any auction, liquidation, or going out of business sale on the Premises, or using or allowing the Premises to be used for any unlawful purpose. Tenant shall cause any equipment or machinery to be installed in the Premises so as to reasonably prevent sounds or vibrations from the Premises from extending into Common Areas, or other space in the Project. Tenant shall not use the Premises in any manner which will require electricity, ventilation, heating, cooling, gas, steam or water beyond the existing capacity of the Premises unless Tenant installs upgrades to such utility facilities, which shall be done at Tenant's sole cost and expense.

(b) Tenant, at its sole expense, shall make any alterations or modifications to the interior or the exterior of the Premises or the Project that are required by Legal Requirements (including, without limitation, compliance of the Premises with the ADA) related to Tenant's use or occupancy of the Premises; provided, however, Tenant shall not make any alterations or modifications to the exterior of the Premises or to the Project without Landlord's prior written approval. Notwithstanding any other provision herein to the contrary, Tenant shall be responsible for any and all demands, claims, liabilities, losses, costs, expenses, actions, causes of action, damages or judgments, and all reasonable expenses incurred in investigating or resisting the same (including, without limitation, reasonable attorneys' fees, charges and disbursements and costs of suit) (collectively, "**Claims**") arising out of or in connection with Legal Requirements, and Tenant shall indemnify, defend, hold and save Landlord harmless from and against any and all Claims arising out of or in connection with any failure of the Premises to comply with any Legal Requirement. Notwithstanding the foregoing or anything herein to the contrary, Landlord, at its sole

expense, shall cause, in connection with Landlord's initial construction and restoration of the Building shell and Common Areas, to be in compliance with all applicable Legal Requirements by the Delivery Date, and thereafter, Landlord shall cause the Common Areas to be in compliance with all applicable Legal Requirements, subject to reimbursement by Tenant for Tenant's Share of Operating Expenses.

7. Holding Over. If, with Landlord's express written consent, Tenant retains possession of the Premises after the termination of the Term, (i) unless otherwise agreed in such written consent, such possession shall be subject to immediate termination by Landlord at any time, (ii) all of the other terms and provisions of this Lease (including, without limitation, the percentage increase in Base Rent pursuant to the Base Rent schedule set forth in the Basic Lease Terms hereof) shall remain in full force and effect (excluding any expansion or renewal option or other similar right or option) during such holdover period, (iii) Tenant shall continue to pay Base Rent in the amount payable upon the date of the expiration or earlier termination of this Lease or such other amount as Landlord may indicate, in Landlord's sole and absolute discretion, in such written consent, and (iv) all other payments shall continue under the terms of this Lease. If Tenant remains in possession of the Premises after the expiration or earlier termination of the Term without the express written consent of Landlord, (A) Tenant shall become a tenant at sufferance upon the terms of this Lease except that the monthly rental shall be equal to 150% of Rent in effect during the last 30 days of the Term, and (B) Tenant shall be responsible for all damages suffered by Landlord resulting from or occasioned by Tenant's holding over, including consequential damages. No holding over by Tenant, whether with or without consent of Landlord, shall operate to extend this Lease except as otherwise expressly provided, and this Section 7 shall not be construed as consent for Tenant to retain possession of the Premises. Acceptance by Landlord of Rent after the expiration of the Term or earlier termination of this Lease shall not result in a renewal or reinstatement of this Lease.

8. Taxes. Landlord shall pay, as part of Operating Expenses, all taxes, levies, assessments and governmental charges of any kind (collectively referred to as "**Taxes**") imposed by any federal, state, regional, municipal, local or other governmental authority or agency, including, without limitation, quasi-public agencies (collectively, "**Governmental Authority**") during the Term, including, without limitation, all Taxes: (i) imposed on or measured by or based, in whole or in part, on rent payable to Landlord under this Lease and/or from the rental by Landlord of the Project or any portion thereof, or (ii) based on the square footage, assessed value or other measure or evaluation of any kind of the Premises or the Project, or (iii) assessed or imposed by or on the operation or maintenance of any portion of the Premises or the Project, including parking, or (iv) assessed or imposed by, or at the direction of, or resulting from statutes or regulations, or interpretations thereof, promulgated by, any Governmental Authority, or (v) imposed as a license or other fee on Landlord's business of leasing space in the Project. Landlord may contest by appropriate legal proceedings the amount, validity, or application of any Taxes or liens securing Taxes. Taxes shall not include any net income taxes imposed on Landlord unless such net income taxes are in substitution for any Taxes payable hereunder. If any such Tax is levied or assessed directly against Tenant, then Tenant shall be responsible for and shall pay the same at such times and in such manner as the taxing authority shall require. Tenant shall pay, prior to delinquency, any and all Taxes levied or assessed against any personal property or trade fixtures placed by Tenant in the Premises, whether levied or assessed against Landlord or Tenant. If any Taxes on Tenant's personal property or trade fixtures are levied against Landlord or Landlord's property, or if the assessed valuation of the Project is increased by a value attributable to improvements in or alterations to the Premises, whether owned by Landlord or Tenant and whether or not affixed to the real property so as to become a part thereof, higher than the base valuation on which Landlord from time-to-time allocates Taxes to all tenants in the Project, Landlord shall have the right, but not the obligation, to pay such Taxes. Landlord's determination of any excess assessed valuation shall be binding and conclusive, absent manifest error. The amount of any such payment by Landlord shall constitute Additional Rent due from Tenant to Landlord immediately upon demand.

9. Parking. Subject to all matters of record, Force Majeure, a Taking (as defined in Section 18 below) and the exercise by Landlord of its rights hereunder, Tenant shall have the right, in common with other tenants of the Project pro rata in accordance with the square footage of the Premises and the square footage of the Project occupied by such other tenants, to park in those areas designated for non-reserved parking, subject in each case to (a) governmental requirements and (b) Landlord's rules and regulations. Landlord may allocate parking spaces among Tenant and other tenants in the Project pro

rata as described above or to designate specific parking spaces for Tenant's and the other tenants' exclusive use if required by the City or if Landlord determines that such parking facilities are becoming crowded. Landlord shall not be responsible for enforcing Tenant's parking rights against any third parties, including other tenants of the Project. During the Base Term, Tenant shall not be required to pay any additional fees for the parking rights provided to Tenant under this Section 9.

10. Utilities. Landlord shall provide utility facilities (collectively, "**Utilities**") as set forth in Section 3(a) of the Work Letter (which is Exhibit C of this Lease). Tenant shall otherwise be fully responsible for all other aspects of the Utilities and utility services provided to the Premises, including but not limited to paying for any hook-up, tax and any related fees and charges in connection with the Utilities. Tenant shall pay directly to the appropriate utility company all charges for utility services supplied to Tenant for which there is a separate meter and/or submeter to the Premises. Tenant agrees to pay to Landlord its share of all charges for utility services supplied to the Premises for which there is no separate meter or submeter, if any, upon billing by Landlord of Tenant's share, as reasonably determined by Landlord based upon estimated usage. No interruption or failure of Utilities, from any cause whatsoever, shall result in eviction or constructive eviction of Tenant, termination of this Lease or the abatement of Rent. Tenant agrees to limit use of water and sewer with respect to Common Areas to normal restroom use.

11. Alterations and Tenant's Property.

(a) Any alterations, additions, or improvements made to the Premises by or on behalf of Tenant, including additional locks or bolts of any kind or nature upon any doors or windows in the Premises, but excluding installation, removal or realignment of furniture systems (other than removal of furniture systems owned or paid for by Landlord) not involving any modifications to the structure or connections (other then by ordinary plugs or jacks) to building systems ("**Alterations**") shall be subject to Landlord's prior written consent, which shall not be unreasonably withheld, conditioned or delayed; provided, however, such consent may be given or withheld in Landlord's sole discretion if any such Alteration affects the structure or building systems. If Landlord approves any Alterations, Landlord may impose such conditions on Tenant in connection with the commencement, performance and completion of such Alterations as Landlord may deem appropriate in Landlord's sole and absolute discretion. Any request for approval shall be in writing, delivered not less than 15 business days in advance of any proposed construction, and accompanied by plans, specifications, bid proposals, work contracts and such other information concerning the nature and cost of the alterations as may be reasonably requested by Landlord, including the identities and mailing addresses of all persons performing work or supplying materials. Landlord's right to review plans and specifications and to monitor construction shall be solely for its own benefit, and Landlord shall have no duty to ensure that such plans and specifications or construction comply with applicable Legal Requirements. Tenant shall cause, at its sole cost and expense, all Alterations to comply with insurance requirements and with Legal Requirements and shall implement at its sole cost and expense any alteration or modification required by Legal Requirements as a result of any Alterations. Tenant shall pay to Landlord, as Additional Rent, on demand an amount equal to 0.00% of all charges incurred by Tenant or its contractors or agents in connection with any Alteration to cover Landlord's overhead and expenses for plan review, coordination, scheduling and supervision. Before Tenant begins any Alteration, Landlord may post on and about the Premises notices of non-responsibility pursuant to applicable law. Tenant shall reimburse Landlord for, and indemnify and hold Landlord harmless from, any expense incurred by Landlord by reason of faulty work done by Tenant or its contractors, delays caused by such work, or inadequate cleanup.

(b) Tenant shall cause all Alterations to be completed free and clear of liens, and shall provide (and cause each contractor or subcontractor to provide) certificates of insurance for workers' compensation and other coverage in amounts and from an insurance company satisfactory to Landlord protecting Landlord against liability for personal injury or property damage during construction. If any Alteration costs more than $50,000, Landlord shall have the right to require Tenant to furnish security or make other arrangements reasonably satisfactory to Landlord to assure payment for the completion of such Alteration free and clear of liens. Upon completion of any Alterations, Tenant shall deliver to Landlord: (i) sworn statements setting forth the names of all contractors and subcontractors who did the

work and final lien waivers from all such contractors and subcontractors; and (ii) "as built" plans for any such Alteration.

(c) Except for Removable Installations (as hereinafter defined), all Installations (as hereinafter defined) shall be and shall remain the property of Landlord during the Term and following the expiration or earlier termination of the Term, shall not be removed by Tenant at any time during the Term, and shall remain upon and be surrendered with the Premises as a part thereof. Notwithstanding the foregoing, Landlord may, at the time its approval of any such Installation is requested, notify Tenant that Landlord requires that Tenant remove such Installation upon the expiration or earlier termination of the Term, in which event Tenant shall remove such Installation in accordance with the immediately succeeding sentence. Upon the expiration or earlier termination of the Term, Tenant shall remove (i) all wires, cables or similar equipment which Tenant has installed in the Premises or in the risers or plenums of the Building, (ii) any Installations for which Landlord has given Tenant notice of removal in accordance with the immediately preceding sentence, and (iii) all of Tenant's Property (as hereinafter defined), and Tenant shall restore and repair any damage caused by or occasioned as a result of such removal, including, without limitation, capping off all such connections behind the walls of the Premises and repairing any holes. During any restoration period beyond the expiration or earlier termination of the Term, Tenant shall pay Rent to Landlord as provided herein as if said space were otherwise occupied by Tenant. If Landlord is requested by Tenant or any lender, Landlord or other person or entity claiming an interest in any of Tenant' Property to waive any lien Landlord may have against any of Tenant's Property, and Landlord consents to such waiver, then Landlord shall be entitled to be paid as administrative rent a fee of $1,000 per occurrence for its time and effort in preparing and negotiating such a waiver of lien.

(d) For purposes of this Lease, (w) "**Removable Installations**" means any items listed on Exhibit F attached hereto and any items agreed by Landlord in writing to be included on Exhibit F in the future, (x) "**Tenant's Property**" means Removable Installations and, other than Installations, any personal property or equipment of Tenant that may be removed without material damage to the Premises, and (z) "**Installations**" means all Alterations, all fixtures, and all partitions, hardware, built-in machinery, built-in casework and cabinets and other similar additions, equipment, property and improvements built into the Premises so as to become an integral part of the Premises, including, without limitation, water systems, chillers, HVAC systems and components thereof, built-in plumbing, electrical and mechanical equipment and systems, and any power generator and transfer switch.

12. Landlord's Repairs. Landlord, as an Operating Expense, shall maintain all of the structural and exterior elements of the buildings in the Project (including the roofs, foundations and exterior walls), parking and other Common Areas of the Project, in good repair, reasonable wear and tear and losses and damages caused by Tenant, or by any of Tenant's agents, servants, employees, invitees and contractors (collectively, "**Tenant Parties**") excluded. Landlord shall have the right to repair any losses and damages caused by Tenant or any Tenant Party, at Tenant's sole cost and expense. Landlord shall not be liable for any failure to make any repairs or to perform any maintenance unless such failure shall persist for an unreasonable time after Tenant's written notice of the need for such repairs or maintenance. Tenant waives its rights under any state or local law to terminate this Lease or to make such repairs at Landlord's expense (and specifically, Tenant waives any rights California Civil Code Sections 1941 and 1942 or any other applicable law which may provide any right to Tenant to make any repairs at Landlord's expense and to offset such expenses against Rent) and agrees that the parties' respective rights with respect to such matters shall be solely as set forth herein. Repairs required as the result of fire, earthquake, flood, vandalism, war, or similar cause of damage or destruction shall be controlled by Section 17.

13. Tenant's Repairs. Subject to Section 12 hereof, Tenant, at its expense, shall repair, replace and maintain in good condition all portions of the Premises, including, without limitation, entries, doors, ceilings, interior windows, interior walls, and the interior side of demising walls. Such repair and replacement may include capital expenditures and repairs whose benefit may extend beyond the Term. Should Tenant fail to make any such repair or replacement or fail to maintain the Premises, Landlord shall give Tenant notice of such failure. If Tenant fails to commence cure of such failure within 10 days of Landlord's notice, and thereafter diligently prosecute such cure to completion, Landlord may perform such work and shall be reimbursed by Tenant within 10 days after demand therefor; provided, however, that if

such failure by Tenant creates or could create an emergency, Landlord may immediately commence cure of such failure and shall thereafter be entitled to recover the costs of such cure from Tenant. Subject to Sections 16 and 17, Tenant shall bear the full uninsured cost of any repair or replacement to any part of the Project which results from damage caused by Tenant or any Tenant Party and any repair that benefits only the Premises.

14. Mechanic's Liens. Tenant shall discharge, by bond or otherwise, any mechanic's lien filed against the Premises or against the Project for work claimed to have been done for, or materials claimed to have been furnished to, Tenant within 10 days after the filing thereof, at Tenant's sole cost and shall otherwise keep the Premises and the Project free from any liens arising out of work performed, materials furnished or obligations incurred by Tenant. Should Tenant fail to discharge any lien described herein, Landlord shall have the right, but not the obligation, to pay such claim or post a bond or otherwise provide security to eliminate the lien as a claim against title to the Project and the cost thereof shall be immediately due from Tenant as Additional Rent. If Tenant shall lease or finance the acquisition of office equipment, furnishings, or other personal property of a removable nature utilized by Tenant in the operation of Tenant's business, Tenant warrants that any Uniform Commercial Code Financing Statement filed as a matter of public record by any Landlord or creditor of Tenant will upon its face or by exhibit thereto indicate that such Financing Statement is applicable only to removable personal property of Tenant located within the Premises. In no event shall the address of the Project be furnished on the statement without qualifying language as to applicability of the lien only to removable personal property, located in an identified suite held by Tenant.

15. Indemnification. Tenant hereby indemnifies and agrees to defend, save and hold Landlord harmless from and against any and all Claims for injury or death to persons or damage to property occurring within or about the Premises, arising directly or indirectly out of use or occupancy of the Premises or a breach or default by Tenant in the performance of any of its obligations hereunder, except to the extent caused by the willful misconduct or gross negligence of Landlord. Landlord shall not be liable to Tenant for, and Tenant assumes all risk of damage to, personal property (including, without limitation, loss of records kept within the Premises). Tenant further waives any and all Claims for injury to Tenant's business or loss of income relating to any such damage or destruction of personal property (including, without limitation, any loss of records). Landlord shall not be liable for any damages arising from any act, omission or neglect of any tenant in the Project or of any other third party.

16. Insurance.

(a) Landlord shall maintain all risk property and, if applicable, sprinkler damage insurance covering the full replacement cost of the Project or such lesser coverage amount as Landlord may elect provided such coverage amount is not less than 90% of such full replacement cost. Landlord shall further procure and maintain commercial general liability insurance with a single loss limit of not less than $2,000,000 for bodily injury and property damage with respect to the Project. Landlord may, but is not obligated to, maintain such other insurance and additional coverages as it may deem necessary, including, but not limited to, flood, environmental hazard and earthquake, loss or failure of building equipment, errors and omissions, rental loss during the period of repair or rebuilding, workers' compensation insurance and fidelity bonds for employees employed to perform services and insurance for any improvements installed by Tenant or which are in addition to the standard improvements customarily furnished by Landlord without regard to whether or not such are made a part of the Project. All such insurance shall be included as part of the Operating Expenses. The Project may be included in a blanket policy (in which case the cost of such insurance allocable to the Project will be determined by Landlord based upon the insurer's cost calculations).

(b) Tenant, at its sole cost and expense, shall maintain during the Term: all risk property insurance with business interruption and extra expense coverage, covering the full replacement cost of all property and improvements installed or placed in the Premises by Tenant at Tenant's expense; workers' compensation insurance with no less than the minimum limits required by law; employer's liability insurance with such limits as required by law; and commercial general liability insurance, with a minimum limit of not less than $2,000,000 per occurrence for bodily injury and property damage with respect to the Premises. The commercial general liability insurance policy shall name Landlord, its officers, directors,

employees, managers, agents, invitees and contractors (collectively, "**Landlord Parties**"), as additional insureds; insure on an occurrence and not a claims-made basis; be issued by insurance companies which have a rating of not less than policyholder rating of A and financial category rating of at least Class VII in "Best's Insurance Guide"; shall not be cancelable for nonpayment of premium unless 30 days prior written notice shall have been given to Landlord from the insurer; contain a hostile fire endorsement and a contractual liability endorsement; and provide primary coverage to Landlord (any policy issued to Landlord providing duplicate or similar coverage shall be deemed excess over Tenant's policies). Copies of such policies (if requested by Landlord), or certificates of insurance showing the limits of coverage required hereunder and showing Landlord as an additional insured, along with reasonable evidence of the payment of premiums for the applicable period, shall be delivered to Landlord by Tenant upon commencement of the Term and upon each renewal of said insurance. Tenant's policy may be a "blanket policy" with an aggregate per location endorsement which specifically provides that the amount of insurance shall not be prejudiced by other losses covered by the policy. Tenant shall, at least 5 days prior to the expiration of such policies, furnish Landlord with renewal certificates.

(c) In each instance where insurance is to name Landlord as an additional insured, Tenant shall upon written request of Landlord also designate and furnish certificates so evidencing Landlord as additional insured to: (i) any lender of Landlord holding a security interest in the Project or any portion thereof, (ii) the landlord under any lease wherein Landlord is tenant of the real property on which the Project is located, if the interest of Landlord is or shall become that of a tenant under a ground or other underlying lease rather than that of a fee owner, and/or (iii) any management company retained by Landlord to manage the Project.

(d) The property insurance obtained by Landlord and Tenant shall include a waiver of subrogation by the insurers and all rights based upon an assignment from its insured, against Landlord or Tenant, and their respective officers, directors, employees, managers, agents, invitees and contractors ("**Related Parties**"), in connection with any loss or damage thereby insured against. Neither party nor its respective Related Parties shall be liable to the other for loss or damage caused by any risk insured against under property insurance required to be maintained hereunder, and each party waives any claims against the other party, and its respective Related Parties, for such loss or damage. The failure of a party to insure its property shall not void this waiver. Landlord and its respective Related Parties shall not be liable for, and Tenant hereby waives all claims against such parties for, business interruption and losses occasioned thereby sustained by Tenant or any person claiming through Tenant resulting from any accident or occurrence in or upon the Premises or the Project from any cause whatsoever. If the foregoing waivers shall contravene any law with respect to exculpatory agreements, the liability of Landlord or Tenant shall be deemed not released but shall be secondary to the other's insurer.

(e) Landlord may require insurance policy limits to be raised to conform with requirements of Landlord's lender and/or to bring coverage limits to levels then being generally required of new tenants within the Project.

(f) Landlord shall have the right to terminate the Lease, upon delivery of thirty (30) days' written notice to Tenant, if any insurance which Landlord is required to obtain and maintain under the Lease is canceled or if Landlord is unable to obtain insurance due to Tenant's use of the Premises (alternatively, Tenant shall have the right to override such termination by Landlord if Tenant ceases that activity within 10 days' after the notice of termination is delivered to Tenant in order to allow Landlord to obtain insurance).

17. Restoration. If, at any time during the Term, the Project or the Premises are damaged or destroyed by a fire or other insured casualty, Landlord shall notify Tenant within 60 days after discovery of such damage as to the amount of time Landlord reasonably estimates it will take to restore the Project or the Premises, as applicable (the "**Restoration Period**"). If the Restoration Period is estimated to exceed 9 months (the "**Maximum Restoration Period**"), Landlord may, in such notice, elect to terminate this Lease as of the date that is 75 days after the date of discovery of such damage or destruction; provided, however, that notwithstanding Landlord's election to restore, Tenant may elect to terminate this Lease by written notice to Landlord delivered within 10 business days of receipt of a notice from Landlord estimating a Restoration Period for the Premises longer than the Maximum Restoration

Period. Unless Landlord or Tenant so elect to terminate this Lease, Landlord shall, subject to receipt of sufficient insurance proceeds (with any deductible to be treated as a current Operating Expense), promptly restore the Premises (excluding the improvements installed by Tenant or by Landlord and paid for by Tenant), subject to delays arising from the collection of insurance proceeds, from Force Majeure events or as needed to obtain any license, clearance or other authorization of any kind required to enter into and restore the Premises issued by any Governmental Authority having jurisdiction over the use, storage, handling, treatment, generation, release, disposal, removal or remediation of Hazardous Materials (as defined in Section 29) in, on or about the Premises (collectively referred to herein as "**Hazardous Materials Clearances**"); provided, however, that if repair or restoration of the Premises is not substantially complete as of the end of the Maximum Restoration Period or, if longer, the Restoration Period, Landlord may, in its sole and absolute discretion, elect not to proceed with such repair and restoration, or Tenant may by written notice to Landlord delivered within 10 business days of the expiration of the Maximum Restoration Period or, if longer, the Restoration Period, elect to terminate this Lease at no cost to Tenant, in which event Landlord shall be relieved of its obligation to make such repairs or restoration and this Lease shall terminate as of the date that is 75 days after the later of: (i) discovery of such damage or destruction, or (ii) the date all required Hazardous Materials Clearances are obtained, but Landlord shall retain any Rent paid and the right to any Rent payable by Tenant prior to such election by Landlord or Tenant.

Tenant, at its expense, shall promptly perform, subject to delays arising from the collection of insurance proceeds, from Force Majeure (as defined in Section 33) events or to obtain Hazardous Material Clearances, all repairs or restoration not required to be done by Landlord and shall promptly re-enter the Premises and commence doing business in accordance with this Lease. Notwithstanding the foregoing, either Landlord or Tenant may terminate this Lease upon written notice to the other if the Premises are damaged during the last year of the Term and Landlord reasonably estimates that it will take more than 2 months to repair such damage; provided, however, that such notice is delivered within 10 business days after the date that Landlord provides Tenant with written notice of the estimated Restoration Period. Landlord shall also have the right to terminate this Lease if insurance proceeds are not available for such restoration. Rent shall be abated from the date all required Hazardous Material Clearances are obtained until the Premises are repaired and restored, in the proportion which the area of the Premises, if any, which is not usable by Tenant bears to the total area of the Premises, unless Landlord provides Tenant with other space during the period of repair that is suitable for the temporary conduct of Tenant's business. Such abatement shall be the sole remedy of Tenant, and except as provided in this Section 17, Tenant waives any right to terminate the Lease by reason of damage or casualty loss.

The provisions of this Lease, including this Section 17, constitute an express agreement between Landlord and Tenant with respect to any and all damage to, or destruction of, all or any part of the Premises, or any other portion of the Project, and any statute or regulation which is now or may hereafter be in effect shall have no application to this Lease or any damage or destruction to all or any part of the Premises or any other portion of the Project, the parties hereto expressly agreeing that this Section 17 sets forth their entire understanding and agreement with respect to such matters.

18. Condemnation. If the whole or any material part of the Premises or the Project is taken for any public or quasi-public use under governmental law, ordinance, or regulation, or by right of eminent domain, or by private purchase in lieu thereof (a "**Taking**" or "**Taken**"), and the Taking would, as determined by a mutually acceptable arbitrator (or, if the parties cannot agree on an arbitrator, a court appointed arbitrator following petition by the parties for the immediate appointment of an arbitrator), either prevent or materially interfere with Tenant's use of the Premises or, in Landlord's reasonable judgment, materially interfere with or impair Landlord's ownership or operation of the Project, then, upon written notice to the other party within 15 days of such Taking, either party shall have the right to terminate this Lease and Rent shall be apportioned as of the date of the Taking. If part of the Premises shall be Taken, and this Lease is not terminated as provided above, Landlord shall promptly restore the Premises and the Project as nearly as is commercially reasonable under the circumstances to their condition prior to such partial Taking and the square footage of the Building, the square footage of the Premises, Tenant's Share of Operating Expenses and the Rent payable hereunder during the unexpired Term shall be reduced to such extent as may be fair and reasonable under the circumstances. Upon any such Taking, Landlord

shall be entitled to receive the entire price or award from any such Taking without any payment to Tenant, and Tenant hereby assigns to Landlord Tenant's interest, if any, in such award. Tenant shall have the right, to the extent that same shall not diminish Landlord's award, to make a separate claim against the condemning authority (but not Landlord) for such compensation as may be separately awarded or recoverable by Tenant for moving expenses and damage to Tenant's trade fixtures, if a separate award for such items is made to Tenant. Tenant hereby waives any and all rights it might otherwise have pursuant to any provision of state law to terminate this Lease upon a partial Taking of the Premises or the Project.

19. Events of Default. Each of the following events shall be a default ("**Default**") by Tenant under this Lease:

(a) **Payment Defaults**. Tenant shall fail to pay any installment of Rent or any other payment hereunder when due; provided, however, that Landlord will give Tenant written notice and an opportunity to cure any failure to pay Rent within 5 days of any such written notice not more than once in any 12 month period and Tenant agrees that such written notice shall be in lieu of and not in addition to, or shall be deemed to be, any notice required by law.

(b) **Insurance**. Any insurance required to be maintained by Tenant pursuant to this Lease shall be canceled or terminated or shall expire or shall be reduced or materially changed, or Landlord shall receive a notice of nonrenewal of any such insurance and Tenant shall fail to obtain replacement insurance at least 20 days before the expiration of the current coverage.

(c) **Abandonment**. Tenant shall abandon the Premises.

(d) **Improper Transfer**. Tenant shall assign, sublease or otherwise transfer or attempt to transfer all or any portion of Tenant's interest in this Lease or the Premises except as expressly permitted herein, or Tenant's interest in this Lease shall be attached, executed upon, or otherwise judicially seized and such action is not released within 90 days of the action.

(e) **Liens**. Tenant shall fail to discharge or otherwise obtain the release of any lien placed upon the Premises in violation of this Lease within 10 days after any such lien is filed against the Premises.

(f) **Insolvency Events**. Tenant or any guarantor or surety of Tenant's obligations hereunder shall: (A) make a general assignment for the benefit of creditors; (B) commence any case, proceeding or other action seeking to have an order for relief entered on its behalf as a debtor or to adjudicate it a bankrupt or insolvent, or seeking reorganization, arrangement, adjustment, liquidation, dissolution or composition of it or its debts or seeking appointment of a receiver, trustee, custodian or other similar official for it or for all or of any substantial part of its property (collectively a "**Proceeding for Relief**"); (C) become the subject of any Proceeding for Relief which is not dismissed within 90 days of its filing or entry; or (D) die or suffer a legal disability (if Tenant, guarantor, or surety is an individual) or be dissolved or otherwise fail to maintain its legal existence (if Tenant, guarantor or surety is a corporation, partnership or other entity).

(g) **Estoppel Certificate or Subordination Agreement.** Tenant fails to execute any document required from Tenant under Sections 22 or 26 within 5 days after a second notice requesting such document.

(h) **Other Defaults**. Tenant shall fail to comply with any provision of this Lease other than those specifically referred to in this Section 19, and, except as otherwise expressly provided herein, such failure shall continue for a period of 10 days after written notice thereof from Landlord to Tenant. Any notice given under this Section 19(h) hereof shall: (i) specify the alleged default, (ii) demand that Tenant cure such default, (iii) be in lieu of, and not in addition to, or shall be deemed to be, any notice required under any provision of applicable law, and (iv) not be deemed a forfeiture or a termination of this Lease unless Landlord elects otherwise in such notice; provided that if the nature of Tenant's default pursuant to this Section 19(h) is such that it cannot be cured by the payment of money and reasonably requires more

than 10 days to cure, then Tenant shall not be deemed to be in default if Tenant commences such cure within said 10 day period and thereafter diligently prosecutes the same to completion; provided, however, that such cure shall be completed no later than 30 days from the date of Landlord's notice.

(i) **Abandoned Property**. If any personal property or Trade Fixtures remain on the Premises after Landlord has regained possession of the Premises, they will be deemed abandoned. Landlord may elect to become the owner of all or any portion of the abandoned property at any time. Irrespective of whether Landlord elects to become the owner of the abandoned property, Landlord may dispose of the abandoned property in any manner chosen by Landlord, in Landlord's sole discretion, (whether by retaining it, selling it, giving it away, or any other manner). Tenant waives the provisions of Civil Code §1980-1991 and 1993-1993.09, and any other law regarding the disposition of abandoned personal property. If Landlord does not elect to become the owner of the abandoned property, Landlord will retain all rights that Landlord has under applicable law relating to abandoned personal property. Before Tenant surrenders the Premises to Landlord, Tenant must remove all signage and repair all damage caused by the signage at Tenant's sole expense. If Landlord elects to assume ownership of the property, Tenant agrees to indemnify, defend and hold Landlord harmless from any third party claiming the right to possess, own or encumber the abandoned property.

20. Landlord's Remedies.

(a) **Payment By Landlord; Interest**. Upon a Default by Tenant hereunder, Landlord may, without waiving or releasing any obligation of Tenant hereunder, make such payment or perform such act. All sums so paid or incurred by Landlord, together with interest thereon, from the date such sums were paid or incurred, at the annual rate equal to 12% per annum or the highest rate permitted by law (the "**Default Rate**"), whichever is less, shall be payable to Landlord on demand as Additional Rent. Nothing herein shall be construed to create or impose a duty on Landlord to mitigate any damages resulting from Tenant's Default hereunder.

(b) **Late Payment Rent**. Late payment by Tenant to Landlord of Rent and other sums due will cause Landlord to incur costs not contemplated by this Lease, the exact amount of which will be extremely difficult and impracticable to ascertain. Such costs include, but are not limited to, processing and accounting charges and late charges which may be imposed on Landlord under any Mortgage covering the Premises. Therefore, if any installment of Rent due from Tenant is not received by Landlord within 5 days after the date such payment is due, Tenant shall pay to Landlord an additional sum equal to 6% of the overdue Rent as a late charge. The parties agree that this late charge represents a fair and reasonable estimate of the costs Landlord will incur by reason of late payment by Tenant. In addition to the late charge, Rent not paid when due shall bear interest at the Default Rate from the 5th day after the date due until paid.

(c) **Remedies**. Upon the occurrence of a Default, Landlord, at its option, without further notice or demand to Tenant, shall have in addition to all other rights and remedies provided in this Lease, at law or in equity, the option to pursue any one or more of the following remedies, each and all of which shall be cumulative and nonexclusive, without any notice or demand whatsoever.

(i) Terminate this Lease, or at Landlord's option, Tenant's right to possession only, in which event Tenant shall immediately surrender the Premises to Landlord, and if Tenant fails to do so, Landlord may, without prejudice to any other remedy which it may have for possession or arrearages in rent, enter upon and take possession of the Premises and expel or remove Tenant and any other person who may be occupying the Premises or any part thereof, without being liable for prosecution or any claim or damages therefor;

(ii) Upon any termination of this Lease, whether pursuant to the foregoing Section 20(c)(i) or otherwise, Landlord may recover from Tenant the following:

(A) The worth at the time of award of any unpaid rent which has been earned at the time of such termination; plus

(B) The worth at the time of award of the amount by which the unpaid rent which would have been earned after termination until the time of award exceeds the amount of such rental loss that Tenant proves could have been reasonably avoided; plus

(C) The worth at the time of award of the amount by which the unpaid rent for the balance of the Term after the time of award exceeds the amount of such rental loss that Tenant proves could have been reasonably avoided; plus

(D) Any other amount necessary to compensate Landlord for all the detriment proximately caused by Tenant's failure to perform its obligations under this Lease or which in the ordinary course of things would be likely to result therefrom, specifically including, but not limited to, brokerage commissions and advertising expenses incurred, expenses of remodeling the Premises or any portion thereof for a new tenant, whether for the same or a different use, and any special concessions made to obtain a new tenant; and

(E) At Landlord's election, such other amounts in addition to or in lieu of the foregoing as may be permitted from time to time by applicable law.

The term "**rent**" as used in this Section 20 shall be deemed to be and to mean all sums of every nature required to be paid by Tenant pursuant to the terms of this Lease, whether to Landlord or to others. As used in Sections 20(c)(ii) (A) and (B), above, the "**worth at the time of award**" shall be computed by allowing interest at the Default Rate. As used in Section 20(c)(ii)(C) above, the "**worth at the time of award**" shall be computed by discounting such amount at the discount rate of the Federal Reserve Bank of San Francisco at the time of award plus 1%.

(iii) Landlord may continue this Lease in effect after Tenant's Default and recover rent as it becomes due (Landlord and Tenant hereby agreeing that Tenant has the right to sublet or assign hereunder, subject only to reasonable limitations). Accordingly, if Landlord does not elect to terminate this Lease following a Default by Tenant, Landlord may, from time to time, without terminating this Lease, enforce all of its rights and remedies hereunder, including the right to recover all Rent as it becomes due.

(iv) Whether or not Landlord elects to terminate this Lease following a Default by Tenant, Landlord shall have the right to terminate any and all subleases, licenses, concessions or other consensual arrangements for possession entered into by Tenant and affecting the Premises or may, in Landlord's sole discretion, succeed to Tenant's interest in such subleases, licenses, concessions or arrangements. Upon Landlord's election to succeed to Tenant's interest in any such subleases, licenses, concessions or arrangements, Tenant shall, as of the date of notice by Landlord of such election, have no further right to or interest in the rent or other consideration receivable thereunder.

(v) Independent of the exercise of any other remedy of Landlord hereunder or under applicable law, Landlord may conduct an environmental test of the Premises as generally described in Section 29(d) hereof, at Tenant's expense.

(d) **Effect of Exercise**. Exercise by Landlord of any remedies hereunder or otherwise available shall not be deemed to be an acceptance of surrender of the Premises and/or a termination of this Lease by Landlord, it being understood that such surrender and/or termination can be effected only by the express written agreement of Landlord and Tenant. Any law, usage, or custom to the contrary notwithstanding, Landlord shall have the right at all times to enforce the provisions of this Lease in strict accordance with the terms hereof; and the failure of Landlord at any time to enforce its rights under this Lease strictly in accordance with same shall not be construed as having created a custom in any way or manner contrary to the specific terms, provisions, and covenants of this Lease or as having modified the same and shall not be deemed a waiver of Landlord's right to enforce one or more of its rights in connection with any subsequent default. A receipt by Landlord of Rent or other payment with knowledge of the breach of any covenant hereof shall not be deemed a waiver of such breach, and no waiver by Landlord of any provision of this Lease shall be deemed to have been made unless expressed in writing and signed by Landlord. To the greatest extent permitted by law, Tenant waives the service of notice of

Landlord's intention to re-enter, re-take or otherwise obtain possession of the Premises as provided in any statute, or to institute legal proceedings to that end, and also waives all right of redemption in case Tenant shall be dispossessed by a judgment or by warrant of any court or judge. Any reletting of the Premises or any portion thereof shall be on such terms and conditions as Landlord in its sole discretion may determine. Landlord shall not be liable for, nor shall Tenant's obligations hereunder be diminished because of, Landlord's failure to relet the Premises or collect rent due in respect of such reletting or otherwise to mitigate any damages arising by reason of Tenant's Default.

21. Assignment and Subletting.

(a) **General Prohibition**. Without Landlord's prior written consent subject to and on the conditions described in this Section 21, Tenant shall not, directly or indirectly, voluntarily or by operation of law, assign this Lease or sublease the Premises or any part thereof or mortgage, pledge, or hypothecate its leasehold interest or grant any concession or license within the Premises, and any attempt to do any of the foregoing shall be void and of no effect; provided, however, Landlord shall not unreasonably withhold its consent in connection with a Permitted Transfer (defined below). If Tenant is a corporation, partnership or limited liability company, the shares or other ownership interests thereof which are not actively traded upon a stock exchange or in the over-the-counter market, a transfer or series of transfers whereby 51% or more of the issued and outstanding shares or other ownership interests of such corporation are, or voting control is, transferred (but excepting transfers upon deaths of individual owners) from a person or persons or entity or entities which were owners thereof at time of execution of this Lease to persons or entities who were not owners of shares or other ownership interests of the corporation, partnership or limited liability company at time of execution of this Lease, shall be deemed an assignment of this Lease requiring the consent of Landlord as provided in this Section 21, subject, however, to Section 21(f) below.

(b) **Grounds for Refusal**. Without in any way limiting Landlord's right to refuse to give consent for any other reason(s), Landlord reserves the right to deny consent, and Tenant agrees that it would not be commercially unreasonable to deny consent, if in Landlord's reasonable business judgment (a) the Net Worth (as adjusted for inflation) of the proposed transferee is less than the greater of the amount of Tenant's and Guarantor's Net Worth as of (i) the execution of this Lease or (ii) as of the date of request for Landlord's consent; (b) the transferee has been required by any prior landlord, lender or Governmental Authority to take remedial action in connection with Hazardous Materials or is subject to an enforcement order; (c) the proposed transferee's use is incompatible with the then existing or desired Tenant mix within the Project, is in violation of the Lease or other requirements of the Project, or the operation of the transferee's business will interfere with or be contrary to any lease or use of any other Tenant or occupant in the Project; or (d) Tenant is in Breach or Default of the Lease at the time consent is requested.

(c) **Additional Conditions**. As a condition to any such assignment or subletting, whether or not Landlord's consent is required, Landlord may require:

(i) That any assignee or subtenant agree, in writing at the time of such assignment or subletting, that if Landlord gives such party notice that Tenant is in default under this Lease, such party shall thereafter make all payments otherwise due Tenant directly to Landlord, which payments will be received by Landlord without any liability except to credit such payment against those due under the Lease, and any such third party shall agree to attorn to Landlord or its successors and assigns should this Lease be terminated for any reason; provided, however, in no event shall Landlord or its successors or assigns be obligated to accept such attornment; and

(ii) A list of Hazardous Materials, certified by the proposed assignee or subtenant to be true and correct, which the proposed assignee or subtenant intends to use, store, handle, treat, generate in or release or dispose of from the Premises, together with copies of all documents relating to such use, storage, handling, treatment, generation, release or disposal of Hazardous Materials by the proposed assignee or subtenant in the Premises or on the Project, prior to the proposed assignment or subletting, including, without limitation: permits; approvals; reports and correspondence; storage and management plans.

(d) **No Release of Tenant, Sharing of Excess Rents**. Notwithstanding any assignment or subletting, Tenant and any guarantor or surety of Tenant's obligations under this Lease shall at all times remain fully and primarily responsible and liable for the payment of Rent and for compliance with all of Tenant's other obligations under this Lease. If the Rent due and payable by a subtenant or assignee (or a combination of the rental payable under such sublease or assignment plus any bonus or other consideration therefor or incident thereto in any form) exceeds the sum of the rental payable under this Lease, (excluding however, any Rent payable under this Section) and actual and reasonable brokerage fees, legal costs and any design or construction fees directly related to and required pursuant to the terms of any such sublease) ("**Excess Rent**"), then Tenant shall be bound and obligated to pay Landlord as Additional Rent hereunder 50% of such Excess Rent within 10 days following receipt thereof by Tenant. If Tenant shall sublet the Premises or any part thereof, Tenant hereby immediately and irrevocably assigns to Landlord, as security for Tenant's obligations under this Lease, all rent from any such subletting, and Landlord as assignee and as attorney-in-fact for Tenant, or a receiver for Tenant appointed on Landlord's application, may collect such rent and apply it toward Tenant's obligations under this Lease. In no event shall Tenant be required to pay Landlord any such Excess Rent in connection with Tenant's use of the Premises as a co-op, sharing or type S licensing model.

(e) **No Waiver**. The consent by Landlord to an assignment or subletting shall not relieve Tenant or any assignees of this Lease or any subtenants of the Premises from obtaining the consent of Landlord to any further assignment or subletting nor shall it release Tenant or any assignee or subtenant of Tenant from full and primary liability under the Lease. The acceptance of Rent hereunder, or the acceptance of performance of any other term, covenant, or condition thereof, from any other person or entity shall not be deemed to be a waiver of any of the provisions of this Lease or a consent to any subletting, assignment or other transfer of the Premises.

(f) **Permitted Transfers**. Notwithstanding anything in this Lease to the contrary, upon obtaining Landlord's prior written consent, Tenant may sublet all or any portion of the Premises or assign this Lease to (i) a parent, subsidiary, affiliate, division or corporation controlling, controlled by or under common control with Tenant; (ii) a successor corporation related to Tenant by merger, consolidation, non-bankruptcy reorganization or government action; or (iii) a party that acquires 50% or more of Tenant's stock or assets, provided such subtenant, assignee or new Tenant entity, as the case may be, has a net worth of at least the same or greater than Tenant's tangible net worth, and further provided the original Tenant (if such entity remains in existence after, for example, a merger) under the Lease shall remain liable under the Lease.

22. Estoppel Certificate. Tenant shall, within five (5) days after written notice from Landlord, execute, acknowledge and deliver a statement in writing in any form reasonably requested by a proposed lender or purchaser, (i) certifying that this Lease is unmodified and in full force and effect (or, if modified, stating the nature of such modification and certifying that this Lease as so modified is in full force and effect) and the dates to which the rental and other charges are paid in advance, if any, (ii) acknowledging that there are not any uncured defaults on the part of Landlord hereunder, or specifying such defaults if any are claimed, and (iii) setting forth such further information with respect to the status of this Lease or the Premises as may be requested thereon. Any such statement may be relied upon by any prospective purchaser or encumbrancer of all or any portion of the real property of which the Premises are a part. Tenant's failure to deliver such statement within such time shall, at the option of Landlord, constitute a Default under this Lease, and, in any event, shall be conclusive upon Tenant that the Lease is in full force and effect and without modification except as may be represented by Landlord in any certificate prepared by Landlord and delivered to Tenant for execution.

23. Quiet Enjoyment. So long as Tenant shall perform all of the covenants and agreements herein required to be performed by Tenant, Tenant shall, subject to the terms of this Lease, at all times during the Term, have peaceful and quiet enjoyment of the Premises against any person claiming by, through or under Landlord.

24. Prorations. All prorations required or permitted to be made hereunder shall be made on the basis of a 360 day year and 30 day months.

25. Rules and Regulations. Tenant shall, at all times during the Term and any extension thereof, comply with all reasonable rules and regulations at any time or from time to time established by Landlord covering use of the Premises and the Project. The current rules and regulations are attached hereto as **Exhibit E**. If there is any conflict between said rules and regulations and other provisions of this Lease, the terms and provisions of this Lease shall control. Landlord shall not have any liability or obligation for the breach of any rules or regulations by other tenants in the Project and shall not enforce such rules and regulations in a discriminatory manner.

26. Subordination. This Lease and Tenant's interest and rights hereunder are hereby made and shall be subject and subordinate at all times to the lien of any Mortgage now existing or hereafter created on or against the Project or the Premises, and all amendments, restatements, renewals, modifications, consolidations, refinancing, assignments and extensions thereof, without the necessity of any further instrument or act on the part of Tenant; provided, however that so long as there is no Default hereunder, Tenant's right to possession of the Premises and Tenant's rights under this Lease shall not be disturbed by the Holder of any such Mortgage. Tenant agrees, at the election of the Holder of any such Mortgage, to attorn to any such Holder; provided, however that so long as there is no Default hereunder, Tenant's right to possession of the Premises and Tenant's rights under this Lease shall not be disturbed by the Holder of any such Mortgage. Tenant agrees upon demand to execute, acknowledge and deliver such instruments, confirming such subordination, and such instruments of attornment as shall be requested by any such Holder, provided any such instruments contain appropriate non-disturbance provisions assuring Tenant's quiet enjoyment of the Premises as set forth in Section 23 hereof. Tenant hereby appoints Landlord attorney-in-fact for Tenant irrevocably (such power of attorney being coupled with an interest) to execute, acknowledge and deliver any such instrument and instruments for and in the name of Tenant and to cause any such instrument to be recorded. Notwithstanding the foregoing, any such Holder may at any time subordinate its Mortgage to this Lease, without Tenant's consent, by notice in writing to Tenant, and thereupon this Lease shall be deemed prior to such Mortgage without regard to their respective dates of execution, delivery or recording and in that event such Holder shall have the same rights with respect to this Lease as though this Lease had been executed prior to the execution, delivery and recording of such Mortgage and had been assigned to such Holder. The term "**Mortgage**" whenever used in this Lease shall be deemed to include deeds of trust, security assignments and any other encumbrances, and any reference to the "**Holder**" of a Mortgage shall be deemed to include the beneficiary under a deed of trust.

27. Surrender. Upon the expiration of the Term or earlier termination of Tenant's right of possession, Tenant shall surrender the Premises to Landlord in the same condition as received, subject to any Alterations or Installations permitted by Landlord to remain in the Premises, free of Hazardous Materials brought upon, kept, used, stored, handled, treated, generated in, or released or disposed of from, the Premises by any person other than a Landlord Party, broom clean, ordinary wear and tear and casualty loss and condemnation covered by Sections 17 and 18 excepted.

Tenant shall immediately return to Landlord all keys and/or access cards to parking, the Project, restrooms or all or any portion of the Premises furnished to or otherwise procured by Tenant. If any such access card or key is lost, Tenant shall pay to Landlord, at Landlord's election, either the cost of replacing such lost access card or key or the cost of reprogramming the access security system in which such access card was used or changing the lock or locks opened by such lost key. Any Tenant's Property, Alterations and property not so removed by Tenant as permitted or required herein shall be deemed abandoned and may be stored, removed, and disposed of by Landlord at Tenant's expense, and Tenant waives all claims against Landlord for any damages resulting from Landlord's retention and/or disposition of such property. All obligations of Tenant hereunder not fully performed as of the termination of the Term, including the obligations of Tenant under Section 29 hereof, shall survive the expiration or earlier termination of the Term, including, without limitation, indemnity obligations, payment obligations with respect to Rent and obligations concerning the condition and repair of the Premises.

28. Intentionally deleted.

29. Environmental Requirements.

(a) **Prohibition/Compliance/Indemnity**. Tenant shall not cause or permit any Hazardous Materials (as hereinafter defined) to be brought upon, kept, used, stored, handled, treated, generated in or about, or released or disposed of from, the Premises or the Project in violation of applicable Environmental Requirements (as hereinafter defined) by Tenant or any Tenant Party. If Tenant breaches the obligation stated in the preceding sentence, or if the presence of Hazardous Materials in the Premises during the Term or any holding over results in contamination of the Premises, the Project or any adjacent property or if contamination of the Premises, the Project or any adjacent property by Hazardous Materials brought into, kept, used, stored, handled, treated, generated in or about, or released or disposed of from, the Premises by anyone other than Landlord and Landlord's employees, agents and contractors otherwise occurs during the Term or any holding over, Tenant hereby indemnifies and shall defend and hold Landlord, its officers, directors, employees, agents and contractors harmless from any and all actions (including, without limitation, remedial or enforcement actions of any kind, administrative or judicial proceedings, and orders or judgments arising out of or resulting therefrom), costs, claims, damages (including, without limitation, punitive damages and damages based upon diminution in value of the Premises or the Project, or the loss of, or restriction on, use of the Premises or any portion of the Project), expenses (including, without limitation, attorneys', consultants' and experts' fees, court costs and amounts paid in settlement of any claims or actions), fines, forfeitures or other civil, administrative or criminal penalties, injunctive or other relief (whether or not based upon personal injury, property damage, or contamination of, or adverse effects upon, the environment, water tables or natural resources), liabilities or losses (collectively, "**Environmental Claims**") which arise during or after the Term as a result of such contamination. This indemnification of Landlord by Tenant includes, without limitation, costs incurred in connection with any investigation of site conditions or any cleanup, treatment, remedial, removal, or restoration work required by any federal, state or local Governmental Authority because of Hazardous Materials present in the air, soil or ground water above, on, or under the Premises. Without limiting the foregoing, if the presence of any Hazardous Materials on the Premises, the Project or any adjacent property caused or permitted by Tenant or any Tenant Party results in any contamination of the Premises, the Project or any adjacent property, Tenant shall promptly take all actions at its sole expense and in accordance with applicable Environmental Requirements as are necessary to return the Premises, the Project or any adjacent property to the condition existing prior to the time of such contamination, provided that Landlord's approval of such action shall first be obtained, which approval shall not unreasonably be withheld so long as such actions would not potentially have any material adverse long-term or short-term effect on the Premises or the Project.

(b) **Tenant Representation and Warranty**. Tenant hereby represents and warrants to Landlord that (i) neither Tenant nor any of its legal predecessors has been required by any prior landlord, lender or Governmental Authority at any time to take remedial action in connection with Hazardous Materials contaminating a property which contamination was permitted by Tenant of such predecessor or resulted from Tenant's or such predecessor's action or use of the property in question, and (ii) Tenant is not subject to any enforcement order issued by any Governmental Authority in connection with the use, storage, handling, treatment, generation, release or disposal of Hazardous Materials (including, without limitation, any order related to the failure to make a required reporting to any Governmental Authority). If Landlord determines that this representation and warranty was not true as of the date of this lease, Landlord shall have the right to terminate this Lease in Landlord's sole and absolute discretion.

(c) **Testing**. Landlord shall, upon not less than 15 days prior written notice to Tenant, have the right to conduct annual tests of the Premises to determine whether any contamination of the Premises or the Project by Hazardous Materials has occurred as a result of Tenant's use. Tenant shall be required to pay the cost of such annual test of the Premises only if such test discloses that Tenant is in violation of the terms and requirements of this Section 29. If contamination has occurred for which Tenant is liable under this Section 29, Tenant shall pay all costs to conduct such tests, in an amount not to exceed $2,000. If no such contamination is found, Landlord shall pay the costs of such tests (which shall not constitute an Operating Expense). Tenant shall, at its sole cost and expense, promptly and satisfactorily remediate any environmental conditions identified by such testing in accordance with all Environmental Requirements. Landlord's receipt of or satisfaction with any environmental assessment in no way waives any rights which Landlord may have against Tenant.

(d) **Tenant's Obligations**. Tenant's obligations under this Section 29 shall survive the expiration or earlier termination of the Lease. During any period of time after the expiration or earlier termination of this Lease required by Tenant or Landlord to complete the removal from the Premises of any Hazardous Materials (including, without limitation, the release and termination of any licenses or permits restricting the use of the Premises and the completion of the approved Surrender Plan), Tenant shall continue to pay the full Rent in accordance with this Lease for any portion of the Premises not relet by Landlord in Landlord's sole discretion, which Rent shall be prorated daily.

(e) **Definitions.** As used herein, the term "**Environmental Requirements**" means all applicable present and future statutes, regulations, ordinances, rules, codes, judgments, orders or other similar enactments of any Governmental Authority regulating or relating to health, safety, or environmental conditions on, under, or about the Premises or the Project, or the environment, including without limitation, the following: the Comprehensive Environmental Response, Compensation and Liability Act; the Resource Conservation and Recovery Act; and all state and local counterparts thereto, and any regulations or policies promulgated or issued thereunder. As used herein, the term "**Hazardous Materials**" means and includes any substance, material, waste, pollutant, or contaminant listed or defined as hazardous or toxic, or regulated by reason of its impact or potential impact on humans, animals and/or the environment under any Environmental Requirements, asbestos and petroleum, including crude oil or any fraction thereof, natural gas liquids, liquefied natural gas, or synthetic gas usable for fuel (or mixtures of natural gas and such synthetic gas). As defined in Environmental Requirements, Tenant is and shall be deemed to be the "**operator**" of Tenant's "**facility**" and the "**owner**" of all Hazardous Materials brought on the Premises by Tenant or any Tenant Party, and the wastes, by-products, or residues generated, resulting, or produced therefrom.

30. Tenant's Remedies/Limitation of Liability. Landlord shall not be in default hereunder unless Landlord fails to perform any of its obligations hereunder within 30 days after written notice from Tenant specifying such failure (unless such performance will, due to the nature of the obligation, require a period of time in excess of 30 days, then after such period of time as is reasonably necessary). Nothing contained in the preceding sentence is intended to obligate Tenant to conduct inspections solely for the purpose of notifying Landlord of the need for any repairs. All obligations of Landlord hereunder shall be construed as covenants, not conditions; and, except as may be otherwise expressly provided in this Lease, Tenant may not terminate this Lease for breach of Landlord's obligations hereunder.

31. Inspection and Access. Landlord and its agents, representatives, and contractors may enter the Premises at any reasonable time to inspect the Premises and to make such repairs as may be required or permitted pursuant to this Lease and for any other business purpose. Landlord and Landlord's representatives may enter the Premises during business hours on not less than 48 hours advance written notice (except in the case of emergencies in which case no such notice shall be required and such entry may be at any time) for the purpose of effecting any such repairs, inspecting the Premises, showing the Premises to prospective purchasers and, during the last year of the Term, to prospective tenants or for any other business purpose. Landlord may erect a suitable sign on the Premises stating the Premises are available to let or that the Project is available for sale. Landlord may grant easements, make public dedications, designate Common Areas and create restrictions on or about the Premises, provided that no such easement, dedication, designation or restriction materially, adversely affects Tenant's use or occupancy of the Premises for the Permitted Use. At Landlord's request, Tenant shall execute such instruments as may be necessary for such easements, dedications or restrictions. Tenant shall at all times, except in the case of emergencies, have the right to escort Landlord or its agents, representatives, contractors or guests while the same are in the Premises, provided such escort does not materially and adversely affect Landlord's access rights hereunder.

32. Security. Tenant acknowledges and agrees that security devices and services, if any, while intended to deter crime may not in given instances prevent theft or other criminal acts and that Landlord is not providing any security services with respect to the Premises. Tenant agrees that Landlord shall not be liable to Tenant for, and Tenant waives any claim against Landlord with respect to, any loss by theft or any other damage suffered or incurred by Tenant in connection with any unauthorized entry into the Premises or any other breach of security with respect to the Premises. Tenant shall be solely responsible for the personal safety of Tenant's officers, employees, agents, contractors, guests and

invitees while any such person is in, on or about the Premises and/or the Project. Tenant shall at Tenant's cost obtain insurance coverage to the extent Tenant desires protection against such criminal acts.

33. Force Majeure. Landlord shall not responsible or liable for delays in the performance of its obligations hereunder when caused by, related to, or arising out of acts of God, strikes, lockouts, or other labor disputes, embargoes, quarantines, weather, national, regional, or local disasters, calamities, or catastrophes, inability to obtain labor or materials (or reasonable substitutes therefor) at reasonable costs or failure of, or inability to obtain, utilities necessary for performance, governmental restrictions, orders, limitations, regulations, or controls, national emergencies, delay in issuance or revocation of permits, enemy or hostile governmental action, terrorism, insurrection, riots, civil disturbance or commotion, fire or other casualty, and other causes or events beyond the reasonable control of Landlord ("**Force Majeure**").

34. Brokers. Landlord and Tenant each represents and warrants that it has not dealt with any broker, agent or other person (collectively, "**Brokers**") in connection with this transaction and that no Brokers brought about this transaction other than SBMI Group. SBMI Group only represents the Landlord. Landlord and Tenant each hereby agrees to indemnify and hold the other harmless from and against any claims by any Broker, other than the brokers, if any named in this Section 34, claiming a commission or other form of compensation by virtue of having dealt with Tenant or Landlord, as applicable, with regard to this leasing transaction. Landlord shall pay SBMI Group the commission pursuant to a separate agreement.

35. Limitation on Landlord's Liability. NOTWITHSTANDING ANYTHING SET FORTH HEREIN OR IN ANY OTHER AGREEMENT BETWEEN LANDLORD AND TENANT TO THE CONTRARY: (A) LANDLORD SHALL NOT BE LIABLE TO TENANT OR ANY OTHER PERSON FOR (AND TENANT AND EACH SUCH OTHER PERSON ASSUME ALL RISK OF) LOSS, DAMAGE OR INJURY, WHETHER ACTUAL OR CONSEQUENTIAL TO: TENANT'S PERSONAL PROPERTY OF EVERY KIND AND DESCRIPTION, INCLUDING, WITHOUT LIMITATION TRADE FIXTURES, EQUIPMENT, INVENTORY, SCIENTIFIC RESEARCH, SCIENTIFIC EXPERIMENTS, LABORATORY ANIMALS, PRODUCT, SPECIMENS, SAMPLES, AND/OR SCIENTIFIC, BUSINESS, ACCOUNTING AND OTHER RECORDS OF EVERY KIND AND DESCRIPTION KEPT AT THE PREMISES AND ANY AND ALL INCOME DERIVED OR DERIVABLE THEREFROM; (B) THERE SHALL BE NO PERSONAL RECOURSE TO LANDLORD FOR ANY ACT OR OCCURRENCE IN, ON OR ABOUT THE PREMISES OR ARISING IN ANY WAY UNDER THIS LEASE OR ANY OTHER AGREEMENT BETWEEN LANDLORD AND TENANT WITH RESPECT TO THE SUBJECT MATTER HEREOF AND ANY LIABILITY OF LANDLORD HEREUNDER SHALL BE STRICTLY LIMITED SOLELY TO LANDLORD'S INTEREST IN THE PROJECT OR ANY PROCEEDS FROM SALE OR CONDEMNATION THEREOF AND ANY INSURANCE PROCEEDS PAYABLE IN RESPECT OF LANDLORD'S INTEREST IN THE PROJECT OR IN CONNECTION WITH ANY SUCH LOSS; AND (C) IN NO EVENT SHALL ANY PERSONAL LIABILITY BE ASSERTED AGAINST LANDLORD IN CONNECTION WITH THIS LEASE NOR SHALL ANY RECOURSE BE HAD TO ANY OTHER PROPERTY OR ASSETS OF LANDLORD OR ANY OF LANDLORD'S OFFICERS, DIRECTORS, EMPLOYEES, AGENTS OR CONTRACTORS. UNDER NO CIRCUMSTANCES SHALL LANDLORD OR ANY OF LANDLORD'S OFFICERS, DIRECTORS, EMPLOYEES, AGENTS OR CONTRACTORS BE LIABLE FOR INJURY TO TENANT'S BUSINESS OR FOR ANY LOSS OF INCOME OR PROFIT THEREFROM.

36. Severability. If any clause or provision of this Lease is illegal, invalid or unenforceable under present or future laws, then and in that event, it is the intention of the parties hereto that the remainder of this Lease shall not be affected thereby. It is also the intention of the parties to this Lease that in lieu of each clause or provision of this Lease that is illegal, invalid or unenforceable, there be added, as a part of this Lease, a clause or provision as similar in effect to such illegal, invalid or unenforceable clause or provision as shall be legal, valid and enforceable.

37. Signs; Exterior Appearance. Tenant shall not, without the prior written consent of Landlord, which may be granted or withheld in Landlord's sole discretion: (i) attach any awnings, exterior lights, decorations, balloons, flags, pennants, banners, painting or other projection to any outside wall of

the Project, (ii) use any curtains, blinds, shades or screens other than Landlord's standard window coverings, (iii) coat or otherwise sunscreen the interior or exterior of any windows, (iv) place any bottles, parcels, or other articles on the window sills, (v) place any equipment, furniture or other items of personal property on any exterior balcony, or (vi) paint, affix or exhibit on any part of the Premises or the Project any signs, notices, window or door lettering, placards, decorations, or advertising media of any type which can be viewed from the exterior of the Premises. The location and size of Tenant's signage shall be subject to Landlord's prior written consent. Tenant acknowledges and agrees that the signage rights granted to Tenant pursuant to this Section shall be subject to Tenant's signs conforming to Landlord overall signage plan for the Project and all Legal Requirements applicable to the Project. Tenant shall remove all of Tenant's signs at the expiration or earlier termination of this Lease and repair all damage resulting from such removal.

38. Miscellaneous.

(a) **Notices**. All notices or other communications between the parties shall be in writing and shall be deemed duly given upon delivery or refusal to accept delivery by the addressee thereof if delivered in person, or upon actual receipt if delivered by reputable overnight guaranty courier, addressed and sent to the parties at their addresses set forth above. Landlord and Tenant may from time to time by written notice to the other designate another address for receipt of future notices.

(b) **Joint and Several Liability**. If and when included within the term "**Tenant**," as used in this instrument, there is more than one person or entity, each shall be jointly and severally liable for the obligations of Tenant.

(c) **Recordation**. Neither this Lease nor a memorandum of lease shall be filed by or on behalf of Tenant in any public record. Landlord may prepare and file, and upon request by Landlord Tenant will execute, a memorandum of lease.

(d) **Interpretation**. The normal rule of construction to the effect that any ambiguities are to be resolved against the drafting party shall not be employed in the interpretation of this Lease or any exhibits or amendments hereto. Words of any gender used in this Lease shall be held and construed to include any other gender, and words in the singular number shall be held to include the plural, unless the context otherwise requires. The captions inserted in this Lease are for convenience only and in no way define, limit or otherwise describe the scope or intent of this Lease, or any provision hereof, or in any way affect the interpretation of this Lease.

(e) **Not Binding Until Executed**. The submission by Landlord to Tenant of this Lease shall have no binding force or effect, shall not constitute an option for the leasing of the Premises, nor confer any right or impose any obligations upon either party until execution of this Lease by both parties.

(f) **Limitations on Interest**. It is expressly the intent of Landlord and Tenant at all times to comply with applicable law governing the maximum rate or amount of any interest payable on or in connection with this Lease. If applicable law is ever judicially interpreted so as to render usurious any interest called for under this Lease, or contracted for, charged, taken, reserved, or received with respect to this Lease, then it is Landlord's and Tenant's express intent that all excess amounts theretofore collected by Landlord be credited on the applicable obligation (or, if the obligation has been or would thereby be paid in full, refunded to Tenant), and the provisions of this Lease immediately shall be deemed reformed and the amounts thereafter collectible hereunder reduced, without the necessity of the execution of any new document, so as to comply with the applicable law, but so as to permit the recovery of the fullest amount otherwise called for hereunder.

(g) **Choice of Law**. Construction and interpretation of this Lease shall be governed by the internal laws of the State of California, excluding any principles of conflicts of laws.

(h) **Time**. Time is of the essence as to the performance of Tenant's obligations hereunder.

(i) **Incorporation by Reference**. All exhibits and addenda attached hereto are hereby incorporated into this Lease and made a part hereof. If there is any conflict between such exhibits or addenda and the terms of this Lease, such exhibits or addenda shall control.

(j) **Entire Agreement.** This Lease, including the exhibits attached hereto, constitutes the entire agreement between Landlord and Tenant pertaining to the subject matter hereof and supersedes all prior and contemporaneous agreements, understandings, letters of intent, negotiations and discussions, whether oral or written, of the parties, and there are no warranties, representations or other agreements, express or implied, made to either party by the other party in connection with the subject matter hereof except as specifically set forth herein.

(k) **Hazardous Activities**. Notwithstanding any other provision of this Lease, Landlord, for itself and its employees, agents and contractors, reserves the right to refuse to perform any repairs or services in any portion of the Premises which, pursuant to Tenant's routine safety guidelines, practices or custom or prudent industry practices, require any form of protective clothing or equipment other than safety glasses. In any such case, Tenant shall contract with parties who are acceptable to Landlord, in Landlord's reasonable discretion, for all such repairs and services, and Landlord shall, to the extent required, equitably adjust Tenant's Share of Operating Expenses in respect of such repairs or services to reflect that Landlord is not providing such repairs or services to Tenant.

(l) **Guaranty**. If the original Tenant named hereunder is an entity, then Daniel Batchelor and Jonathan Hogander shall sign the Guaranty attached to this Lease as Exhibit F; however, if the original Tenant named hereunder is Daniel Batchelor and Jonathan Hogander, then he shall have the right to assign this Lease to an entity wholly owned by him, provided he signs such Guaranty in the same form as the Guaranty attached to this Lease as Exhibit F concurrently therewith, and in such event, the validity and effectiveness of this Lease is expressly conditioned upon the execution of such Guaranty by Daniel Batchelor and Jonathan Hogander, an individual, in the form attached to this Lease as Exhibit F. If the Guaranty is not so executed, then this Lease shall be of no force or effect.

39. Accessibility; Americans with Disabilities Act. The Premises:

__X__ have not undergone an inspection by a Certified Access Specialist (CASp). A Certified Access Specialist (CASp) can inspect the subject premises and determine whether the subject premises comply with all of the applicable construction-related accessibility standards under state law. Although state law does not require a CASp inspection of the subject premises, the commercial property owner or lessor may not prohibit the lessee or tenant from obtaining a CASp inspection of the subject premises for the occupancy or potential occupancy of the lessee or tenant, if requested by the lessee or tenant. The parties shall mutually agree on the arrangements for the time and manner of the CASp inspection, the payment of the fee for the CASp inspection, and the cost of making any repairs necessary to correct violations of construction-related accessibility standards within the premises.

☐ have undergone an inspection by a Certified Access Specialist (CASp) and it was determined that the Premises met all applicable construction-related accessibility standards pursuant to California Civil Code §55.51 et seq.

☐ have undergone an inspection by a Certified Access Specialist (CASp) and it was determined that the Premises did not meet all applicable construction-related accessibility standards pursuant to California Civil Code §55.51 et seq.

Because compliance with the Americans with Disabilities Act (ADA) is dependent upon Tenant's specific use of the Premises, Landlord makes no warranty or representation as to whether or not the Premises comply with ADA or any similar legislation. If Tenant's use of the Premises requires modifications or additions to the Premises in order to be in ADA compliance, Tenant agrees to make any necessary modifications and/or additions at Tenant's expense. Landlord shall be responsible for any modifications or additions to the Common Areas in order to be in ADA compliance pursuant to Section 6(b) above, provided, however, any modifications or additions to the Common Areas performed by Landlord prior to the Delivery Date shall be at Landlord's sole cost and expense without reimbursement by Tenant.

40. Options to Extend. Landlord grants Tenant the option to extend the Lease term for two (2) additional five (5) year periods (each, an "Option Term," or collectively, "Option Terms") beginning when each prior term expires on the following terms and conditions:

(a) **Method of Exercise**. To exercise an option to extend, Tenant shall give written notice of Tenant's election to exercise the option to Landlord at least six (6) months but not more than nine (9) months before the date the Option Term would commence, time being of the essence. The notice must specifically state that Tenant is exercising Tenant's option to extend the Term; if a notice from Tenant to Landlord is ambiguous about whether an option is being exercised, or if proper notification of the exercise of an option is not given and/or received, the option will automatically expire. The options may only be exercised consecutively during the Term.

(b) **Rent Adjustments**. Base Rent for the first year of each Option Term shall be the greater of (i) fair market rent or (ii) 103% of the Base Rent in effect for the last year of the Original Term or the prior Option Term, as applicable. Fair market rent shall be the rental rate agreed upon by Landlord and Tenant for the first year of the applicable Option Term. Landlord and Tenant shall exercise good faith efforts to agree upon fair market rent for the first year of the Option Term within thirty (30) days following the exercise of the option by Tenant for such Option Term. If, however, Base Rent for the first year of the Option Term has not been determined by Landlord and Tenant, acting in good faith, within sixty (60) days following Tenant's exercise of the option, then fair market rent shall be established as follows: Landlord shall select an appraiser of its choice and give Tenant written notice of such appraiser's name, address and telephone number. Within ten (10) days after receipt of such notice by Landlord, Tenant shall select an individual as an appraiser of its choice and give Landlord written notice of such appraiser's name, address and telephone number. The two appraisers so selected by Landlord and Tenant shall then select an individual as a third appraiser within ten (10) days after receipt by Tenant of Landlord's notification as to its selection of an appraiser, and furnish Landlord and Tenant written notice of such appraiser's name, address and telephone number. All appraisers selected pursuant to this paragraph shall be M.A.I. appraisers, unless Landlord and Tenant shall otherwise agree in writing, each having at least ten (10) years' experience with commercial property in Nevada County, California. Each of the three (3) selected appraisers shall then determine the fair rental value of the Premises for the first year of the applicable Option Term and the Base Rent hereunder for the first year of the Option Term shall be determined to be the average of the three (3) appraisals for each such years; provided, however, that in no event shall the Base Rent for the first year of the Option Term be deemed to be less than 103% of the Base Rent for the last year of the immediately preceding Term. If Landlord fails to select its appraiser in the manner and within the time specified above, then the Base Rent for the first year of the Option Term shall be the fair market rent as determined by Tenant (but not less than 103% of the Base Rent for the last year of the immediately preceding Term). If Tenant fails to select its appraiser in the manner and within the time specified above, then the Base Rent for the first year of the Option Term shall be the fair market rent as determined by Landlord (but not less than 103% of the Base Rent for the last year of the immediately preceding Term). If the appraisers selected by Landlord and Tenant fail to appoint the third appraiser within the time and in the manner prescribed above, then Landlord and/or Tenant shall promptly apply to the local office of the American Arbitration Association for the appointment of the third appraiser. All fees, costs and expenses incurred in connection with obtaining the appraisals and the arbitration procedure set forth in this section shall be shared equally by Landlord and Tenant; however, Landlord and Tenant shall each bear their own attorneys' fees incurred with respect to this procedure. The Base Rent payable for each subsequent year of the Option Term shall increase on each anniversary thereof by three percent (3%) over the Base Rent payable for the immediately preceding year.

//
//
//
//
//
//
//
//

[Signatures on next page]

//

//
//
//
//
//
//

IN WITNESS WHEREOF, Landlord and Tenant have executed this Lease as of the day and year first above written.

TENANT:

LONGITUDE MANAGEMENT, LLC,
a California limited liability company

DocuSigned by:
By: _____
8CF0D731E9BF449...
Name: Daniel Batchelor

Title: Ceo

Date: 9/30/2019

DocuSigned by:
By: _____
7C99C4A583E34FE...
Name: Jonathan Hogander

Title: CFO

Date: 9/30/2019

LANDLORD:

NC ACQUISITION 569, LLC,
a California limited liability company

DocuSigned by:
By: Daniel Slukolnik
01E26DE7C430408...
Name: Authorized Signer

Title: Authorized Signer

Date: 9/30/2019

DocuSign Envelope ID: C58985E6-7AAA-490E-B2A2-2CA978E878A1

EXHIBIT A TO LEASE

FLOOR PLAN

LOWER FLOOR PLAN

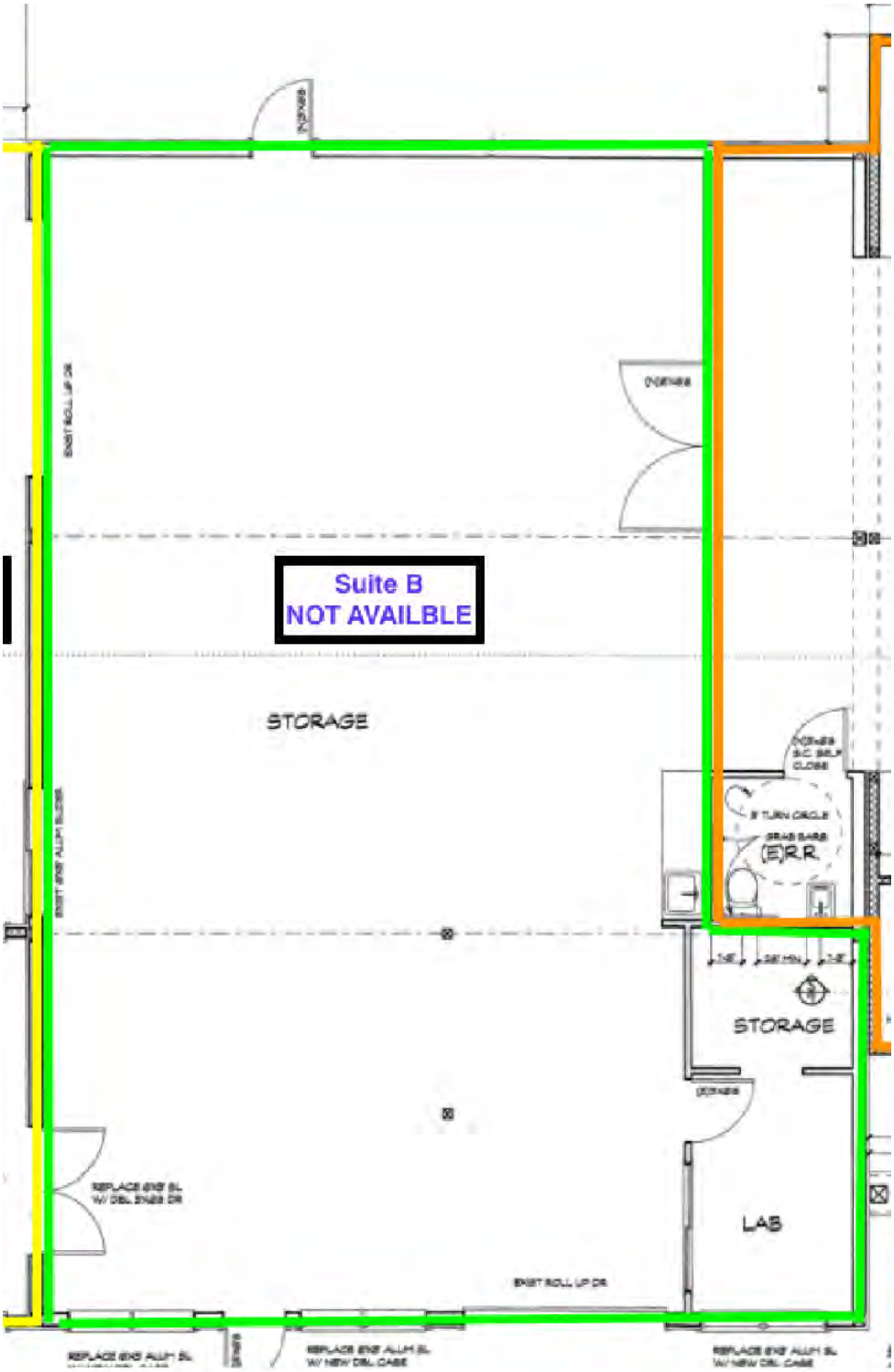

To Agenda

DocuSign Envelope ID: C58985E6-7AAA-490E-B2A2-2CA978E878A1

To Agenda

DocuSign Envelope ID: C58985E6-7AAA-490E-B2A2-2CA978E878A1

To Agenda

EXHIBIT C TO LEASE

WORK LETTER

THIS WORK LETTER dated 9/30/2019, _____ (this "**Work Letter**") is made and entered into by and between NC ACQUISITION 569, LLC, a California limited liability company ("**Landlord**"), and LONGITUDE MANAGEMENT, LLC, a California limited liability company ("**Tenant**"), and is attached to and made a part of the Lease dated _____, 2019 (the "**Lease**"), by and between Landlord and Tenant. Any initially capitalized terms used but not defined herein shall have the meanings given them in the Lease.

1. **General Requirements**.

(a) **Tenant's Authorized Representative**. Tenant designates _____ and _____ (either such individual acting alone, "**Tenant's Representative**") as the only persons authorized to act for Tenant pursuant to this Work Letter. Landlord shall not be obligated to respond to or act upon any request, approval, inquiry or other communication ("**Communication**") from or on behalf of Tenant in connection with this Work Letter unless such Communication is in writing from Tenant's Representative. Tenant may change either Tenant's Representative at any time upon not less than 5 business days advance written notice to Landlord. Neither Tenant nor Tenant's Representative shall be authorized to direct Landlord's contractors in the performance of Landlord's Work (as hereinafter defined).

(b) **Landlord's Authorized Representative**. Landlord designates _____ and _____ (either such individual acting alone, "**Landlord's Representative**") as the only persons authorized to act for Landlord pursuant to this Work Letter. Tenant shall not be obligated to respond to or act upon any request, approval, inquiry or other Communication from or on behalf of Landlord in connection with this Work Letter unless such Communication is in writing from Landlord's Representative. Landlord may change either Landlord's Representative at any time upon advance written notice to Tenant (which may be through email). Landlord's Representative shall be the sole persons authorized to direct Landlord's contractors in the performance of Landlord's Work.

(c) **Architects, Consultants and Contractors**. Landlord and Tenant hereby acknowledge and agree that: (i) the general contractor for Tenant's Work shall be _____, and (ii) _____ shall be the architect (the "**TI Architect**") for Tenant's Work.

2. **Tenant Improvements**. Other than Landlord's Work (as defined in Section 3(a) below), Landlord shall not have any obligation whatsoever with respect to the finishing of the Premises for Tenant's use and occupancy.

3. **Performance of Landlord's Work**.

(a) **Definition of Landlord's Work**. Landlord shall deliver the Premises to Tenant in as is cold shell condition.

4. **Tenant's Work**.

(a) **Tenant's Plans and Drawings**. Tenant shall deliver to Landlord the construction plans, specifications and drawings for Tenant's Work (the "**TI Drawings**") detailing Tenant's proposed Tenant's Work. Not more than 10 business days thereafter, Landlord shall deliver to Tenant the written objections, questions or comments of Landlord with regard to the TI Drawings. Tenant shall cause the TI Drawings to be revised to address such written comments and shall resubmit said drawings to Landlord for approval within 5 business days thereafter. Such process shall continue until Landlord has approved the TI Drawings.

(b) **Licensed Contractor; Compliance**. All of Tenant's Work shall be performed and constructed by a licensed contractor and in accordance with all building codes and applicable City

ordinances, regulations, codes and governmental requirements and State laws, regulations and governmental requirements. The TI Drawings for Tenant's Work shall be subject to Landlord's prior written approval, not to be unreasonably withheld.

(c) **Tenant's Early Access Rights**. Tenant may have Early Possession of the Premises if permitted by Landlord pursuant to Section 2(a) of the Lease, at Tenant's sole risk and expense, and provided that such Tenant's Work is coordinated with Landlord and Landlord's general contractor, and complies with the Lease and all other reasonable restrictions and conditions Landlord may impose. All such access shall be during normal business hours or at such other times as are reasonably designated by Landlord. Notwithstanding the foregoing, Tenant shall have no right to enter onto the Premises or the Project unless and until Tenant shall deliver to Landlord evidence reasonably satisfactory to Landlord demonstrating that any insurance reasonably required by Landlord in connection with such pre-commencement access (including, but not limited to, any insurance that Landlord may require pursuant to the Lease) is in full force and effect. Any entry by Tenant shall comply with all established safety practices of Landlord's contractor and Landlord until completion of Landlord's Work and acceptance thereof by Tenant.

(d) **No Interference**. Neither Tenant nor any Tenant Party (as defined in the Lease) shall interfere with the performance of Landlord's Work, nor with any inspections or issuance of final approvals by applicable Governmental Authorities, and upon any such interference, Landlord shall have the right to exclude Tenant and any Tenant Party from the Premises and the Project until Substantial Completion of Landlord's Work.

(e) **No Acceptance of Premises**. The fact that Tenant may, with Landlord's consent, enter into the Project prior to the date Landlord's Work is Substantially Complete for the purpose of performing Tenant's Work shall not be deemed an acceptance by Tenant of possession of the Premises, but in such event Tenant shall defend with counsel reasonably acceptable by Landlord, indemnify and hold Landlord harmless from and against any loss of or damage to Tenant's property, completed work, fixtures, equipment, materials or merchandise, and from liability for death of, or injury to, any person, caused by the act or omission of Tenant or any Tenant Party.

(f) **Tenant to Provide Dumpster for Demolition**. During installation of Tenant's improvements, Tenant shall provide at its own expense an adequate dumpster for removal of demolition and construction debris. If Tenant fails to do so, Landlord may provide the dumpster and bill Tenant 1.5 times the cost of the dumpster expenses service. Further, Tenant shall be responsible for and shall indemnify and hold Landlord harmless from and against any losses and liabilities arising out of any activity or omission of Tenant's contractors, subcontractors, or their agents and employees, including without limitation by reason of faulty work performed by Tenant or its contractors or subcontractors, damage to the Building or Project caused by Tenant's contractors or subcontractors, delays in work performed in, on, or about the Building or Project caused by Tenant's contractors or subcontractors, inadequate clean-up or failure to comply with the requirements of Landlord and Landlord's general contractor and onsite construction manager, if any, with respect to protection of Landlord's construction work and the work of other tenants in the Project which has been completed or is in progress, including paths of access within the Project for construction materials, equipment and labor, and coordination of sequencing of work.

(g) **Certificate of Occupancy**. Tenant will furnish Landlord with a valid Certificate of Occupancy (or its equivalent) issued by the appropriate governmental agency, in addition to any local and state cannabis licenses or permits, within five (5) days after the issuance thereof.

5. **Miscellaneous**. No modification, waiver or amendment of this Work Letter or of any of its conditions or provisions shall be binding upon Landlord or Tenant unless in writing signed by Landlord and Tenant.

IN WITNESS WHEREOF, Landlord and Tenant have executed this Work Letter to be effective on the date first above written.

TENANT:

LONGITUDE MANAGEMENT, LLC,
a California limited liability company

DocuSigned by:

By: _____

8CF0D731E9BF449...

Name: Daniel Batchelor

Title: Ceo

Date: 9/30/2019

DocuSigned by:

By: _____

7C99C4A583E34FE...

Name: Jonathan Hogander

Title: CFO

Date: 9/30/2019

LANDLORD:

NC ACQUISITION 569, LLC,
a California limited liability company

DocuSigned by:

By: Daniel Slukolnik

01E26DE7C430408...

Name: Authorized Signer

Title: Authorized Signer

Date: 9/30/2019

DocuSign Envelope ID: C58985E6-7AAA-490E-B2A2-2CA978E878A1

EXHIBIT D TO LEASE

ACKNOWLEDGMENT OF DELIVERY DATE

This **ACKNOWLEDGMENT OF DELIVERY DATE** is made this _____ day of _____, _____, between **NC ACQUISITION 569, LLC**, a California limited liability company ("**Landlord**"), and **LONGITUDE MANAGEMENT, LLC**, a California limited liability company ("**Tenant**"), and is attached to and made a part of the Lease dated _____, 2007 (the "**Lease**"), by and between Landlord and Tenant. Any initially capitalized terms used but not defined herein shall have the meanings given them in the Lease.

Landlord and Tenant hereby acknowledge and agree, for all purposes of the Lease, that the Delivery Date of the Base Term of the Lease is _____, 20__, the Rent Commencement Date of the Base Term is _____, 20__, and the termination date of the Base Term of the Lease shall be midnight on _____, 20__. In case of a conflict between the terms of the Lease and the terms of this Acknowledgment of Delivery Date, this Acknowledgment of Delivery Date shall control for all purposes.

IN WITNESS WHEREOF, Landlord and Tenant have executed this ACKNOWLEDGMENT OF DELIVERY DATE to be effective on the date first above written.

TENANT:

LONGITUDE MANAGEMENT, LLC,
a California limited liability company

By: _____

Name: _____

Title: _____

Date: _____

By: _____

Name: _____

Title: _____

Date: _____

LANDLORD:

NC ACQUISITION 569, LLC,
a California limited liability company

By: _____

Name: _____

Title: _____

Date: _____

To Agenda

EXHIBIT E TO LEASE

Rules and Regulations

1. The sidewalk, entries, and driveways of the Project shall not be obstructed by Tenant, or any Tenant Party, or used by them for any purpose other than ingress and egress to and from the Premises.

2. Tenant shall not place any objects, including antennas, outdoor furniture, etc., in the parking areas, landscaped areas or other areas outside of its Premises, or on the roof of the Project.

3. Except for animals assisting the disabled, no animals shall be allowed in the offices, halls, or corridors in the Project.

4. Tenant shall not disturb the occupants of the Project or adjoining buildings by the use of any radio or musical instrument or by the making of loud or improper noises.

5. If Tenant desires telegraphic, telephonic or other electric connections in the Premises, Landlord or its agent will direct the electrician as to where and how the wires may be introduced; and, without such direction, no boring or cutting of wires will be permitted. Any such installation or connection shall be made at Tenant's expense.

6. Parking any type of recreational vehicles is specifically prohibited on or about the Project. Except for the overnight parking of operative vehicles, no vehicle of any type shall be stored in the parking areas at any time. In the event that a vehicle is disabled, it shall be removed within 48 hours. There shall be no "For Sale" or other advertising signs on or about any parked vehicle. All vehicles shall be parked in the designated parking areas in conformity with all signs and other markings. All parking will be open parking, and no reserved parking, numbering or lettering of individual spaces will be permitted except as specified by Landlord.

7. Tenant shall maintain the Premises free from rodents, insects and other pests.

8. Landlord reserves the right to exclude or expel from the Project any person who, in the judgment of Landlord, is intoxicated or under the influence of liquor or drugs or who shall in any manner do any act in violation of the Rules and Regulations of the Project.

9. Tenant shall not cause any unnecessary labor by reason of Tenant's carelessness or indifference in the preservation of good order and cleanliness. Landlord shall not be responsible to Tenant for any loss of property on the Premises, however occurring, or for any damage done to the effects of Tenant by the janitors or any other employee or person.

10. Tenant shall give Landlord prompt notice of any repairs or maintenance required as to the Common Areas.

11. Tenant shall not permit storage outside the Premises, including without limitation, outside storage of trucks and other vehicles, or dumping of waste or refuse or permit any harmful materials to be placed in any drainage system or sanitary system in or about the Premises.

12. All moveable trash receptacles provided by the trash disposal firm for the Premises must be kept in the trash enclosure areas, if any, provided for that purpose.

13. No auction, public or private, will be permitted on the Premises or the Project.

14. No awnings shall be placed over the windows in the Premises except with the prior written consent of Landlord.

15. The Premises shall not be used for lodging, sleeping or cooking or for any immoral or illegal purposes or for any purpose other than that specified in the Lease. No gaming devices shall be operated in the Premises.

16. Tenant assumes full responsibility for protecting the Premises from theft, robbery and pilferage.

DocuSign Envelope ID: C58985E6-7AAA-490E-B2A2-2CA978E878A1

EXHIBIT F TO LEASE

GUARANTY

[ATTACHED]

To Agenda

GUARANTY

This Guaranty ("Guaranty") dated as of 9/30/2019, 2019, is made by Daniel Batchelor and Jonathan Hogander, as individuals ("Guarantor") in favor of NC ACQUISITION 569, LLC, a California limited liability company ("Landlord"). Landlord and LONGITUDE MANAGEMENT, LLC, a California limited liability company ("Tenant") have entered into a Lease, dated 9/30/2019, 2019 (the "Lease"). Under the Lease, Landlord leased to Tenant certain property located at 569 Searls Avenue, Suite B, Nevada City, CA 95959 (the "Premises"). As a condition to entering into the Lease, Landlord has required that Guarantor execute and deliver to Landlord this Guaranty.

As a material inducement to Landlord to enter into the Lease with Tenant, Guarantor agrees as follows:

Guaranty. Guarantor absolutely, unconditionally and irrevocably guarantees to Landlord the timely payment of all amounts that Tenant owes under the Agreement, or any Lease extensions, renewals, or modifications. Guarantor further guarantees Tenant's full, faithful, and timely performance of the Agreement, or any Lease extensions, renewals, or modifications. If Tenant fails to pay amounts due (whether rent or other amounts) or fails to otherwise perform any covenant or obligation under the Agreement, Guarantor (at Guarantor's expense) will fully and promptly pay all amounts due and perform all of Tenant's covenants and obligations under the Lease on demand by Landlord. Amounts due may include (but are not limited to) rent, interest, costs advanced by Landlord, damages, cleaning costs, repair costs, or replacement costs for real or personal property, and all expenses including, (but not limited to) court costs and reasonable attorney fees that may arise because of Tenant's default. In addition, Guarantor agrees to pay reasonable attorney fees and all other costs and expenses incurred by Landlord in enforcing this Guaranty or in any action or proceeding arising out of, or relating to, this Guaranty.

2. Term. This Guaranty will become effective when it is signed and will continue until all of Tenant's obligations have been fully and completely performed, notwithstanding any Lease termination, renewal, extension or holding over.

(A) Tenant Definition. For purposes of this Guaranty, and the obligations and liabilities of Guarantor, the term "Tenant" includes any and all occupants of the Premises, whether the original Tenant, subtenants, assignees, or others directly or indirectly leasing or occupying the Premises.

(B) Continuing Guaranty. This Guaranty will remain in full force notwithstanding the appointment of a receiver to take possession of all or substantially all of the assets of Tenant, or an assignment by Tenant for the benefit of creditors, or any action taken or suffered by Tenant under any insolvency, bankruptcy, reorganization, moratorium, or other debtor relief act or statute, whether now existing or later amended or enacted, or the disaffirmance of the Lease in any action or otherwise.

(C) No Guarantor Right of Possession, and No Obligation to Serve Notices. This Guaranty does not confer a right to possession of the premises by Guarantor, and Landlord is not required to serve Guarantor with any notices to terminate or to perform covenants, including any demand for payment of rent, prior to Landlord proceedings against Guarantor for Guarantor's obligations under this Guaranty.

(D) Independent Obligations. The obligations of Guarantor are independent of, and may exceed, the obligations of Tenant. At Landlord's option, a separate action may be brought and prosecuted against Guarantor, whether or not any action is first or subsequently brought against Tenant, or whether or not Tenant is joined in any action, and Guarantor may be joined in any action or proceeding initiated by Landlord against Tenant arising out of, in connection with, or based upon the Lease.

(E) Guarantor Waivers. Guarantor waives any right to (a) require Landlord to proceed against Tenant, other Guarantors, or any other person or entity liable to Landlord or pursue any other remedy in Landlord's power, (b) complain of delay in the enforcement of Landlord's rights under the Lease, and (c) require Landlord to proceed against or exhaust any security held from Tenant or Guarantor. Guarantor waives any defense arising from any disability or other defense of Tenant. Guarantor waives any right (1) of reimbursement, indemnification, contribution and any other rights and defenses available to a guarantor under California Civil Code §2787-2855; (2) to demands upon and notices to Tenant and to Guarantor,

including, without limitation, demands for performance, notices of nonperformance, notices of non-payment, and notices of acceptance of this Guaranty; and (3) to defenses Guarantor may have by reason of an election of remedies by Landlord under Civil Code §2856(a)(2). Guarantor waives any defenses under 11 USC §506(b).

(F) Guarantor Subrogation. Guarantor subrogates all existing or future indebtedness of Tenant to Guarantor to the obligations owed to Landlord under the Lease and this Guaranty.

(G) No Reporting Duty. Guarantor assumes full responsibility for keeping fully informed of the financial condition of Tenant and all other circumstances affecting Tenant's ability to perform Tenant's obligations under the Lease. Guarantor agrees that Landlord will have no duty to report to Guarantor any information that Landlord receives about Tenant's financial condition or any circumstances bearing on Tenant's ability to perform any obligations.

(H) Lease Amendments, Extensions, Renewals, Assignments and Subletting. Guarantor agrees that the Lease may be amended, extended, renewed, assigned or sublet (by agreement or course of conduct) without consent or notice to Guarantor and this Guaranty will guaranty the performance of the Lease as amended, extended, renewed, modified, assigned or sublet.

(I) Estoppel Certificates and Financial Statements. If Tenant has any obligation to sign and deliver estoppel certificates and financial statements, Guarantor will have the same obligation to provide estoppel certificates signed by Guarantor and to provide Guarantor's financial statements.

(J) Joint and Several Obligations. If the obligations of Tenant are guaranteed by more than one party, their obligations will be joint and several, and a release or liability limitation of any one or more of the guarantors will not release or limit the liability of any other guarantors.

(K) Successors and Assigns. This Guaranty will be binding upon Guarantor and Guarantor's heirs, administrators, personal and legal representatives, successors, and assigns, and will inure to the benefit of Landlord and Landlord's successors and assigns. Landlord may, without notice to or consent of Guarantor, assign this Guaranty, the Lease, or the rents and other sums payable under the Lease, in whole or in part.

(L) Governing Law. This Guaranty will be governed by California law. This Guaranty may not be waived, altered, modified, or amended except in a writing signed by an authorized officer of Landlord and by Guarantor. Any action arising out of this Guaranty may be brought in the county where the property is located.

(M) Severance. If any provision of this Guaranty is invalid under the laws of any jurisdiction, this Guaranty will be construed as if it did not contain that provision.

(N) Counterparts and Fax Signatures. This Guaranty may be executed in counterpart, each which will be a valid and binding original, but all together will constitute one and the same instrument. Landlord may rely on an electronic copy of this Guaranty as if it was the original.

[Signatures on next page]

GUARANTOR:

By: DocuSigned by: 8CF0D731E9BF449...

Name: Daniel Batchelor

Date: 9/30/2019

SSN or Fed ID #: 615308936

By: DocuSigned by: 7C09C4A388E34FE...

Name: Jonathan Hogander

Date: 9/30/2019

SSN or Fed ID #: 518156373

RECOMMENDED CONDITIONS OF APPROVAL
Longitude Management, LLC, 569 Searls Avenue, Suite B

A. PLANNING DEPARTMENT

1. Provide proof of California State Licensing that verifies the license type issued.

2. Prior to commencing operations, you are required to complete all tenant improvements as detailed in your application and as required by Fire and Building Code. A cannabis business shall be subject to a mandatory building inspection, and must obtain all required permits and approvals which would otherwise be required for any business of the same size and intensity operating in that zone. This includes but is not limited to obtaining any required building permit(s), fire department approvals, Environmental Health Department approvals and other zoning and land use permit(s) and approvals.

3. Provide evidence of the right to occupy and to use the property for purposes of a cannabis distribution business. As a condition precedent to the City's issuance of a cannabis business permit pursuant to this Chapter, any person intending to open and to operate a cannabis business shall provide sufficient evidence of the legal right to occupy and to use the proposed location.

4. Execute an agreement, in a form approved by the city attorney, agreeing to indemnify, defend (at applicant's sole cost and expense), and hold the City of Nevada City, and its officers, officials, employees, representatives, and agents, harmless, from any and all claims, losses, damages, injuries, liabilities or losses which arise out of, or which are in any way related to, the City's issuance of the cannabis business permit, the City's decision to approve the operation of the cannabis business or activity, to process used by the City in making its decision, or the alleged violation of any federal, state or local laws by the cannabis business or any of its officers, employees or agents.

5. Provide proof of liability insurance and liability agreement. You are required to maintain insurance at coverage limits, and with conditions thereon determined necessary and appropriate from time to time by the city attorney.

6. Operation of your business shall be consistent with the submitted application material or as otherwise presented at the public meeting and as approved by the planning commission.

7. Off-street parking shall accommodate all employees, distribution vehicles, vendors, and visitors of the subject business. No on-street parking is permitted. Justification of overflow parking shall be submitted to the Planning Department prior to leasing any off-site parking space and shall be re-justified with all annual renewals in order to evaluate any changes of use of the overflow parking property. Justification of the applicant’s ability to accommodate the business with off street parking shall be included with annual renewals.

8. Prior to issuance of a cannabis business permit, provide a copy of your contract with a licensed cannabis waste disposal company

9. Packaging and Labeling:

    a. Before a cannabis manufacturer delivers any edible cannabis or edible cannabis product to a dispensary, the same shall be labeled and placed in tamper-evident

To Agenda

packaging which at least meets the requirements of California Business and Professions Code section 19347, as the same may be amended from time-to-time or superseded or replaced by subsequent State legislation or by any department or division of the State of California

b. All items to be sold or distributed shall be individually wrapped at the original point of preparation by the business permitted as a cannabis manufacturer

c. Labeling must include a warning if nuts or other known allergens are used, and must include the total weight (in ounces or grams) of cannabis in the package

d. A warning that the item is a medication and not a food must be clearly legible on the front of the package

e. The package must have a label warning that the product is to be kept away from children

f. The label must also state that the product contains cannabis and must specify the date of manufacture

g. Any edible cannabis product that is made to resemble a typical food product must be in a properly labeled opaque (non-see-through) package before it leaves the marijuana manufacturing business

h. Deliveries must be in a properly labeled opaque package when delivered

i. The City Council may impose additional packaging and labeling requirements on cannabis or cannabis products by resolution, as permitted by law

B. ENGINEERING DEPARTMENT

1 Unless authorized by separate waste discharge requirements, the Cannabis General Order, or a CWA section 404 permit, the following discharges are prohibited:

a. Any waste that could affect the quality of the waters of the state.

b. Any wastewater discharge to City sewer that contains excessive nutrients (e.g., phosphate or nitrate), salinity constituents (e.g., sodium, chloride, potassium, calcium, sulfate, magnesium), constituents (e.g., iron, manganese, zinc, molybdenum, boron, and silver) or chemicals

C. FIRE DEPARTMENT

1. The occupancy classification shall be determined as a Group F (Factory Industrial). Group F occupancies include those intended for the purpose of assembling, disassembling, fabricating, finishing, manufacturing, packaging, repair or processing operations that not classified as Group H or S.

2. Note that NFPA 1 is not recognized by the California Building or Fire Codes. However, it is recommended that NFPA 1 Chapter 38, Marijuana Growing, Processing or Extraction Facilities, be used to determine fire protection requirements not covered in the California Fire Code (CFC).

3. Fire extinguishers with a minimum rating of 2-A: 10-B: C shall be provided such that no point in the building is further than 75-foot travel distance to an extinguisher.

4. The design occupant load and floor area allowance shall be determined by the CBC Table 1004.1.2. For instance, maximum floor area allowed per occupant for a business area is 100.

    a. The occupant load shall be for the proposed tenant space shall be limited to a single (1) occupant in unit 235.

    b. The occupant load shall be for the proposed tenant space shall be limited to a single (1) occupant in unit 236.

5. The existing fire sprinkler system shall be reviewed by a fire protection contractor or specialist for proper coverage. Sprinklers in the production, storage, shipping and receiving areas shall be spaced for Ordinary Hazard Occupancy per NFPA 13; 130 square feet per sprinkler maximum. The existing usage of the space is offices which are considered Light Hazard Occupancy (225 square feet per sprinkler maximum). Hydraulic calculations may be required. Fire sprinkler plans shall be submitted to the Fire Department by a licensed C-16.

6. There appears to be no volatile extraction processes taking place with in this facility. If any volatile extraction operations are to take place, details shall be submitted for review and approval prior to conducting any extraction processes.

7. Keys shall be provided to access all spaces to be placed into the facility Knox box.

D. COUNTY ENVIRONMENTAL HEALTH DEPARTMENT

1. All hazardous materials stored, utilized and wastes generated from the manufacturing operations requires permitting through the Environmental Health Department CUPA program per California Health and Safety Code.

2. The manufacturing operation must adhere to existing California Department of Public Health - Manufactured Cannabis Safety Branch (MCSB) regulations governing the manufacture of cannabis-infused edibles for both medical and nonmedical use.

3. Any retail cannabis operation, in conjunction with the manufacturing operation, shall be licensed with the Bureau of Cannabis Control.

4. The applicant and/or facility operator must adhere to all applicable codes and regulations regarding the storage of hazardous materials and the generation of hazardous wastes set forth in California Health and Safety Code Section 25500-25519 and 25100- 25258.2 including the electronic reporting requirement to the California Environmental Reporting System (CERS).

5. The applicant and/or facility operator must apply for and obtain a permit for the storage of hazardous materials and the generation of hazardous wastes from the Nevada County Department of Environmental Health (NCDEH), Certified Unified Program Agency (CUPA).

6. The applicant and/or facility operator shall secure and annually renew the permit for this facility within 30 days of becoming subject to applicable regulations. Routine compliance inspections, conducted by NCDEH inspectors, will occur at the facility and compliance inspections are typically unannounced inspections during regular business hours: Monday - Friday, 8:00am - 5:00pm.

To Agenda

7. The applicant shall adhere to the County of Nevada Cannabis Ordinance, and any additional permitting, registration and reporting requirements.

8. Addition of the sale of edible cannabis products through a Dispensary in conjunction with the manufacturing and distribution processes proposed requires a permit from the Nevada County Department of Environmental Health (NCDEH).

E. POLICE DEPARTMENT

1. The Chief of Police or designee, may conduct a facility inspection both prior to issuance of a tenant improvement permit and again prior to issuance of a cannabis business permit. Any recommended security features shall be implemented to the satisfaction of the Police Chief or designee prior to permit issuance.

2. The City reserves the right to postpone issuance of the Cannabis Business permit(s), in the event of any pending criminal investigations of any principal of the subject business, until such time that the investigation is closed.

To Agenda

City of Nevada City

February 11, 2020

Longitude Management, LLC
ATTN: Daniel Batchelor
Email: Daniel@latitudemanagement.com

Subject: **Nevada City Cannabis Distribution Business Zoning Verification Letter; 569 Searls Avenue, Suite B**

Dear Mr. Batchelor:

This letter shall serve as verification that property located at 569 Searls Avenue, Suite B Nevada City, CA meets local locational requirements in terms of zoning limits to operate a l Cannabis Distribution business. Pursuant to our local ordinance, Chapter 9.22 of the City Municipal Code, the "D" business category is defined as follows:

> *"Distribution" means the procurement, sale, and transport, of medical cannabis or medical cannabis products between entities licensed pursuant to the MCRSA and any subsequent State of California legislation regarding the same.*

The subject property, located at 569 Searls Avenue is located within the "Light Industrial-Scenic Corridor" (LI-SC) zoning district. This determination will suffice for local verification purposes, this Zoning Verification letter does not constitute verification of compliance with State locational requirements.

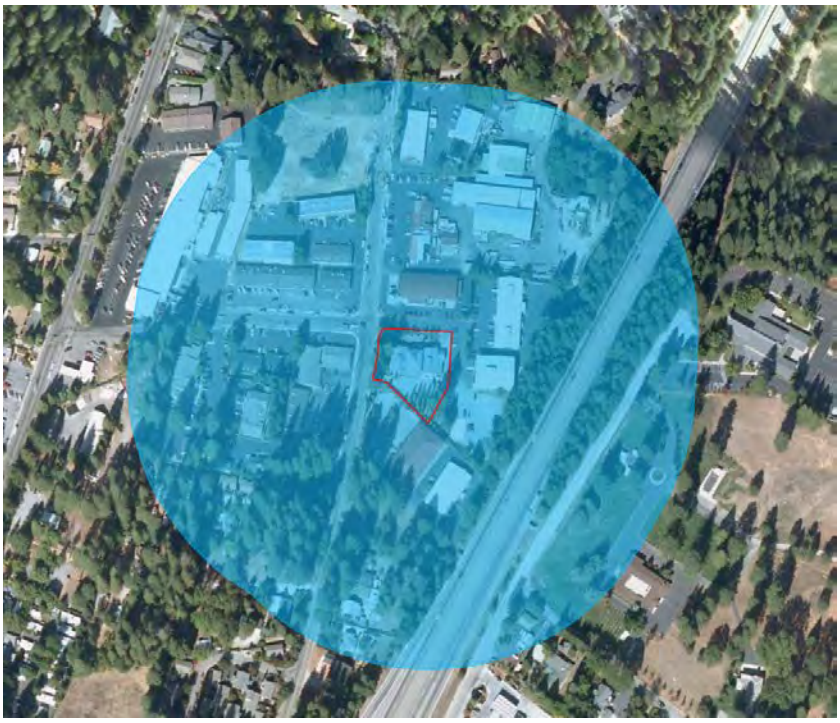

Subject property boundary *600-foot radius area*

Please note that the issuance of a "Zoning Verification Letter" does not constitute written evidence of any kind of permission being given by the City of Nevada City, and it does not convey any right to operate a Cannabis Business in the City. The Planning Commission, following the approved application procedure process will make a final decision on the issuance of Cannabis Business permits.

Sincerely,

Amy Wolfson
City Planner
(530) 265-2496 x130

December 4, 2019

Longitude Management, LLC
ATTN: Daniel Bachelor

Via email: **daniel@latitudemanagement.com**

Re: Application Clarification Requests from Nevada City Planning Department: Longitude Management, LLC

1. Based on the business category definitions outlined in the City's Ordinance (below) and your operation involving a "pre-roll machine" and "bio-shredder," the business will fall under the cultivation category as well as the distribution category. Please indicate either that these activities will not take place, or update the application to reflect the cultivation operation and pay the additional category fee of $2,500?

"Cultivation" means any activity, whether occurring indoors or outdoors, involving the propagation, planting, growing, harvesting, drying, curing, grading, and/or trimming of cannabis plants or any part thereof for any purpose, including medical marijuana.

"Distribution" means the procurement, sale, and transport, of medical cannabis or medical cannabis products between entities licensed pursuant to the MCRSA and any subsequent State of California legislation regarding the same.

Longitude Management will not engage in any cultivation activities. As allowed by state regulations our distribution license will allow us to package, re-package, label, and re-label cannabis for retail sale. As per state regulations, a licensed distributor may not process (meaning trimming) cannabis but may roll pre-rolls that consist exclusively of any combination of flower, shake, leaf, or kief. Pre-rolls must be rolled prior to regulatory compliance testing. We have always advocated for the local license definitions to be in alignment with the state's and if they are not in alignment we may need to bring this back to the council to ensure that they are. I'm also not understanding the $2500 fee without submitting an entire Cultivation application.

2. Please provide a brief summary of your daily activity. How many daily trips do you anticipate? I just don't have a good picture of what your daily operation looks like.

As described in our business plan, Longitude Distribution will procure bulk flower, brand it, package it and label it for distribution to license retailers including our partner businesses such as Elevation 2477' or Blessed Extracts, located in Davis CA. Through our distribution license we intend to launch local brands that place Nevada County on the map as an important producer of small batch, craft cannabis.

To Agenda

Our day-to-day, will include procuring, packaging and labeling as permitted by state regulations and transportation of those products to licensed businesses including retailers and other manufacturers.

3. How many distribution vehicles to you plan to run? Where will they be stored?

   Longitude Distribution will like to eventually have two sprinter vans to procure and transport product. These vehicles will be stored in the assigned parking spaces at 569 Searls Avenue and its adjacent gravel lot through a parking-lease agreement with 545-555 NC Acquisition LLC, owners of 545-555 Searls Avenue.

   In the immediate future and upon receiving the license, Longitude Distribution will rely on self-transport suppliers and other distribution partners to deliver and pick-up product from our facilities through a detailed standard operating procedure requiring the careful scheduling of deliveries during business hours.

4. Do you have a contract with a cannabis waste disposal company? Do you transport cannabis waste to a legal facility or does the waste disposal company come to the site? How frequent are waste disposal trips?

   Upon receiving our licenses and building our facilities, Longitude Distribution plans on contracting with Gaiaca for cannabis waste management services. We are currently in talks with partner businesses at the Searls Campus so that Gaiaca may offer discounted services for picking up all cannabis waste at this location at the same time.

5. Where is the referenced community room? Is this the community room that is in a separate facility space or is this a space that is only serving the distribution facility?

   Longitude Distribution will not have a community room. Our space at 569 Searls Ave, suite B is currently used as an interim community space for Elevation 2477' when we have special events and while our application is being considered. In the future, and as a service to the community, we are partnering with the Nevada County Cannabis Alliance and other cannabis businesses to host educational events at places like the Nevada Theatre, Akashic Visions Gallery and The Foothills Event Center.

6. Provide a site plan that shows the location of the future gated parking area.

   We are currently working with the campus in order to allocate all parking area to the north of the building facing Reibes, to business employees. The campus has not yet confirmed this area will be gated.

7. What are the business operating hours?

   8 am to 8 pm

8. Is there currently a loading bay door or is this a proposed feature?

   There is currently no loading bay door. However, we plan to allocate the door located on the same side as our neighbors loading door, as indicated in our site plan, for shipping and receiving. This side of the building will be heavily guarded by shared security with our business partner, Elevation 2477', and as indicated by the Nevada City Police Department, provides better clearance and transparent view to the adjacents Argall Way and Searls Avenue.

9. Please indicate what coordination efforts you have with other building tenants in terms of security, waste management, and other common facilities.

   As partners in Elevation 2477', we continue to be pioneers in the campus and have proposed several initiatives for shared security, waste management and other services for all of the tenants in the campus. Elevation 2477's security team will continue to guard the entire building and provide perimeter security to all tenants. As indicated above, we are in talks with Gaica to provide discounted services to the whole campus that includes a one-time waste pick-up per month or quarter depending on the needs of each individual business.

From: Maria Herrera <maria@latitudemanagement.com>
Sent: Friday, January 17, 2020 3:28 PM
To: Amy Wolfson <Amy.Wolfson@nevadacityca.gov>
Cc: Daniel Batchelor <daniel@latitudemanagement.com>; Jonathan Hogander <jonathan@latitudemanagement.com>
Subject: Re: FW: Cannabis Business Clarification Questions

Hi Amy,

Thanks for sending this.

I'm not sure how you want us to respond to this.

But Longitude Management agrees to amend and bring into compliance the following items in SCI's Compliance checklist:

- Record Keeping. Section 1: Longitude Management LLC will keep records for at least 7 years in accordance with California and Nevada City Regulations.
- Security Plan. Section 10: Longitude Management will keep surveillance records as required by local and state regulatory agencies for 90 days.
- Required Supplemental Information. Section D1: Labor and Employment. Longitude Management's Labor and Employment Plan includes employee titles and heightened pay ranges in Section 6 of our Labor and Employment Plan. Our Labor and Employment Plan also includes employee expectations and security training under Section 3. Our employee training manual is still being developed and it will include strict guidelines for abiding by local and state regulations. Longitude Management will abide by all of California's labor laws in regards to benefits and required time off.
- Required Supplemental Information. Section D2: Labor and Employment. Longitude Management does not expect to have more than 5 employees at any given time give the small space of our facility and the limited regional operations the company expects to perform. However, as required by all California regulations governing over cannabis activity, Longitude Management will enter into a Labor Peace Agreement with a union of our employees' preferences.

Let me know if this is sufficient to answer SCI's questions regarding our application.

Best,

Maria Herrera

To Agenda

Applicant: ___Longitude Management_____
Applicant name: _Daniel Batchelor_and Jonathan Hogander_____

SCIConsultingGroup
Cannabis Management Services

City of Nevada: Distribution Application Summary Report

Application Findings: Application is generally consistent with most local and state regulations, see items marked NI for any items with incomplete or missing information or procedures and items marked NC for non-compliance with local and State regulations

	Application Compliance Checklist	Code Section (California Code of Regulations CCR - CDFA Title 3 and NCM 9.22	C, NC, NI, N/A	Comments
A.	**Principal Background Information**			
1	Applicant name, title, phone #, address, signature	Application	C	
2	Picture of Applicant	Application	C	
3	Copy of S.S. Card	Application	C	
4	Copy of Drivers License	Application	C	
5	Proof of Address	Application	C	
6	Principal/Partner History	Application	C	
7	List any partners with criminal record	Application	C	
B.	**Business Organization Status**			
1	Cannabis Business Organizational Status and proof	Application	C	Limited Liability Corporation
C.	**Business Description and Location**			
1	Statement of Purpose	Application	C	
2	Proposed Business Location	Application	C	569 Searls Ave, Suite B, Nevada City, CA 95959; APN: 005-280-018-00
3	Name and Address of Property Owner	Application	C	NC Acquisitions 569
4	Name and address of school(s) and/or public park(s) closest to Proposed Location:	Application	C	Deer Creek Elementary (1,234') and Pioneer Park (3,423')
5	Zoning Verification Letter	Application	C	
6	Description of neighborhood around the proposed location surrounding uses, nearby sensitive uses (such as schools, churches, parks, daycares, or residents), transit access to site, etc. A	Application	C	
7	Site Plan: dimensioned; entire parcel & parking; additional structures; elevations and photos; exterior alterations	Application	C	
8	Floor Plans	Application	C	
C.	**Signage Plan**			
1	Conforms to Nevada City Municipal Code	9.22.090(I)(1)	C	
2	Signage does not obstruct any entrance or exit to building or window	9.22.090(I)(2)	C	Signage will be discreet and give no indication about nature of business
D.	**Business Plan: Conform to State and Local Law**			
1	Conform to State and Local Law	Application	C	
2	Day-to-Day operations	Application	C	
Operational Requirements				
	Cannabis shall not be consumed on the premises of any cannabis business.	9.22.090(D)	C	Security Plan: no cannabis consumption onsite or on premise
	No outdoor storage of cannabis or cannabis products is permitted at any time.	9.22.090(E)	C	Day to Day Operations (Section i): three separate storage rooms located inside the facility
	Employees at least 21 years of age or older	9.22.090(J 1)	C	Security Plan: Employees must be 21 or older and not convicted of a felony
	A licensed distributor shall distribute only cannabis goods, cannabis accessories, and licensees' branded merchandise or promotional materials.	§ 5300	C	Day to Day Operations (Section e): engage in the procurement, sales and transportation of cannabis or cannabis products
	Non-employees and contractors will be escorted at all times by licensee or at least 1 employee when in limited-access areas of premises	§ 5342	C	Security Plan (4.2.3. Visitor Access): Visitors given escorted access by manager or employee
Packaging, Labeling, and Rolling				
	A licensed distributor may package, re-package, label, and re-label cannabis, including pre- rolls, for retail sale.	§ 5303.	C	Day to Day Operations (Section j.): Applicant will be assisting other farmers with packaging and branding, along with packaging in-house brands
	The package shall be tamper-evident; If the package of cannabis or pre-rolls contains more than one serving, then the packaging shall be resealable; The package shall not imitate any package used for goods that are typically marketed to children.	§ 5303.	C	Enhanced Product Safety: will only distribute cannabis products that are labeled and placed in resealable, tamper-evident, child-resistant packaging; will not be attractive to children
Testing				
	A licensed distributor shall ensure that all cannabis goods batches are stored separately and distinctly from other cannabis goods batches on the licensed distributor's premises.	§ 5302 (a)	C	Day to Day Operations (Section g.): all raw and unpackaged cannabis will be quarantined and tested prior to packaging
	After taking physical possession of a cannabis goods batch, the licensed distributor shall contact a licensed testing laboratory	§ 5304.	C	Day to Day Operations (Section h)
	A licensed distributor or an employee of the licensed distributor shall be physically present to observe the laboratory employee obtain the sample of cannabis	§ 5305 (b)	C	Day to Day Operations (Section h)
	The sampling shall be video recorded	§ 5305 (c)	C	Day to Day Operations (Section h): sampling recorded by video camera
Transportation				
	Prior to transporting any cannabis goods, the licensed distributor shall have a completed sales invoice or receipt	§ To Agenda	C	Transportation of Product Policy
	Cannabis goods shall only be transported inside of a vehicle or trailer and shall not be visible or identifiable from outside of the vehicle or trailer.	§ 5311(e)	C	Day to Day Operations (Section g.): products will not be visible from outside the vehicle.
	Cannabis goods shall be locked in a fully enclosed box, container, or cage that is secured to the inside of the vehicle or trailer. No portion of the enclosed box, container, or cage shall be comprised of any part of the body of the vehicle or trailer. For the purposes of this section, the inside of the vehicle includes the trunk.	§ 5311(f)	C	Day to Day Operations (Section g.): Products will be transported inside a locked box or cage affixed securely to the frame of the vehicle, and will not be visible from outside the vehicle.
	While left unattended, vehicles and trailers shall be locked and secured.	§ 5311(g)	C	Transportation of Product Policy: one delivery employee will remain in vehicle at all times
	At a minimum, a licensed distributor shall have a vehicle alarm system on all transport vehicles and trailers.	§ 5311(i)	C	Day to Day Operations (Section g.): vehicles will be equipped with alarm and GPS
Inventory Control and Diversion				
1	Description of track and trace protocols adheres to 16 CCR §5048-5051	§ 5048 -5051	C	Track and Trace System
2	Inventory reconciling every 30 days	§ 5051(a)	C	Track and Trace System: monthly inventory audit
Waste management				

C = Compliant NC = Non – Compliant NI = Not Included N/A = Not Applicable

1	(c) Cannabis goods intended for disposal shall remain on the licensed premises until rendered into cannabis waste. The licensee shall ensure that: (1) Access to the cannabis goods is restricted to the licensee, its employees or agents; and(2) Storage of the cannabis goods allocated for disposal is separate and distinct from other cannabis goods.	§ 5054 (c)	C	Day to Day Operations (Section m.)
2	Cannabis waste at a minimum removed from packaging or container and rendering it unrecognizable an usable	§ 5054 (d)	C	Day to Day Operations (Section m.)
3	Cannabis waste on the licensed premises shall be secured in a receptacle or area that is restricted to the licensee, its employees, or an authorized waste hauler.	§ 5054 (e)	C	Day to Day Operations (Section m.)
4	A licensee shall report all cannabis waste activities, up to and including disposal, into the track and trace system.	§ 5054 (f)	C	Day to Day Operations (Section m.)
Records Keeping				
1	Maintain the following records related to commercial cannabis activity for at least seven years: financial, personnel, training, contracts, permits/licenses, security records, cannabis destruction, data/information entered into track and trace,	§ 5037 (a)	NC	Record Keeping Policy: applicant states records will be kept for at least 4 years. State requires 7 years
2	All required records shall be prepared and retained in accordance with the following conditions: legible; stored in secure area	§ 5037 (b)	C	Record Keeping Policy: records kept electronically and backed up to a secure offsite cloud-based storage
D.	**Business Plan: Financial Plan**			
1	Schedule for beginning operation, proposed construction and improvements, and timeline for completion	Application	C	Timeline (Section a.) - operational by March/April 2020 - dependent on issuance of City Permits
2	Budget for construction, operation, maintenance, payroll, equipment, ect.	Application	C	
3	Proof of capitalization	Application	C	
4	Pro forma for 3 years of operation	Application	C	
D.	**Required Supplemental Information: Neighborhood Compatibility Plan**			
1	Address how exterior areas and surrounding public areas, will be managed, to avoid nuisances or negative impacts on neighbors and surrounding community.	Application	C	Neighborhood Compatibility Plan: Facility is well-lit and well-ventilated. Exterior areas will be managed as outlined in their Safety and Security Plan; share security personnel with their retail facility; all doors equipped with surveillance and alarms; discreet signage; odor mitigation
2	Conducted neighborhood outreach? Proof?	Application	C	Neighborhood Compatibility Plan: Sent letter to surrounding businesses within 300ft and included summarized concerns from each business
3	Plan to address concerns?	Application	C	Addressing Community Concerns: information sent to surrounding businesses on procedures for filing a complaint; managers contact info provided
D.	**Required Supplemental Information: Safety and Security Plan**			
Safety Plan				
1	HVAC system	Application	C	Neighborhood Compatibility Plan: applicant proposes a state-of-the-art HVAC system and filtration system; ventilation rate of 15 cfm/occupant based on occupancy of 30 persons; install 3 separate HVAC systems
2	Fire Suppression	Application	C	Safety Plan: internal and external sprinklers; emergency response plans; Fire protection and flammable combustible material checklists; annual inspection by independent Fire Consultant; fire extinguishers
3	Ventilation systems shall meet the requirements of Health and Safety Code sections 114149 and 114149.3	Application	C	
4	Alarm system	Application	C	Safety Plan: professionally installed alarm system with 7 motion detectors, alarm contacts on exterior doors; and product safe room that detects owners when opened; window contacts
5	Professionally and centrally-monitored fire, robbery, and burglar alarm systems maintained by professional security company	9.22.090(P)(2c.)	C	Safety plan
6	Written and physical mechanisms to deal with issues/threats	Application	C	
Security Plan				
1	General security policies for facility	Application	C	Security Plan: written procedures for: physical security measures; facility access control, after-hours security measures; product and cash storage plan; Product and Cash transportation plan; security alarm system; video surveillance system; network security; security personnel
2	Employee security policies	Application	C	Security Plan: Limited access for employees, key code entry; record recording room accessible by Upper Management only; employees will undergo safety and security training
3	Employee training Policies	Application	C	Security Plan: all new employees receive training upon hiring. Training consist of security plan, premise orientation, emergency training and situational training
4	Transactional security	Application	C	Security Plan (4.5.4): cash removal will occur at the rear drive-in access to the receiving room; random cash pickups and delivery; $10k limit
5	Visitor Security	Application	C	Security Plan (4.1.3): all visitors required to check in at lobby; Security Plan (4.2.3): licensed contractors may check out a facility key only during period of work; all contractors required to sign visitors log and given a visitors badge
6	3rd Party contractor security	Application	C	Security Plan (4.1.3): all visitors required to check in at lobby; Security Plan (4.2.3): visitors will be escorted by manage or employee and will not be given access codes; all visitors required to sign visitors log and given a contractor badge
7	Delivery Security	Application	C	Security Plan (Transportation of Product Policy): minimum of 2 employees; delivery personnel are required to check in at front desk; secured delivery dock and intake room at the back of bldg.; personnel will walk outside and around receiving door before opening; transportation vehicle will drive into loading bay and door will be secured
8	Security surveillance cameras and a video recording system must be installed to monitor all doors into the buildings on the business site, the parking lot, loading areas, and all exterior sides of the property adjacent to the public rights of way. The cameras and recording system must be of adequate quality, color rendition, and resolution to allow the identification of any individual present on the business site.	9.22.090(P)(2a.)	C	Security Plan (4.7)
9	Video surveillance system: a. Minimum 1280x720 pixel resolution; b. Able to effectively and clearly record images of area under surveillance; c. Each camera will be permanently mounted and in a fixed location allowing for clear recordings of activity within 20 feet of all points of entry and exit, and allows for clear ID of any person and activities in all areas in subsection e: d. Areas to be recorded on video surveillance system include: 1. Areas where cannabis goods are weighed, packed, stored, loaded and unloaded for transportation, prepared, or moved within the premises; 2. Limited-access areas; 3. Security rooms; 4. Areas storing a surveillance-system storage device with at least one camera recording the access points to the secured surveillance recording area; 5. Entrances and exits to the premises, which shall be recorded from both indoor and outdoor vantage points; e. Point of sale areas and areas where cannabis goods are displayed for sale; f. Continuous 24/7 recording 15fps; g. Physical media or storage device for video protected from tampering; h. Recording kept for minimum 90 days; j. Recorded images will clearly and accurately display time and date; k. Video surveillance system equipped with failure notification system notifying licensee of any interruption or failure of video surveillance system or storage device; j. Recorded images will clearly and accurately display time and date;	To Agenda §5044	C	Security Plan (4.7)
10	Surveillance recording kept for minimum 90 days	§5044	NC	Security Plan (4.7.4): surveillance recordings kept for a minimum of 45 days. State requires 90 days
11	24/7 security recordings retained for 30 days	9.22.090(P)(2b.)	C	Security Plan (4.7): 24 hours a day
12	All agents, officers, or other persons acting for or employed by a licensee will display a laminated or plastic-coated identification badge issued by licensee at all times while engaging in commercial cannabis activity. The ID badge will include business name and license #, employee's first name & ID #, color photo of employee at least 1 inch in width and 1.5 inches in height	16 CCR § 5043	C	Security Plan (4.2.5)
13	Limited-access areas secured with commercial grade locks	16 CCR § 5046	C	Security Plan (4.1.1 & 4.1.4): ANSI/BHMA Commercial Grade 1 or Grade 2 locks for external doors and restricted access equipped with commercial grade electronic keypad locks

C = Compliant NC = Non – Compliant NI = Not Included N/A = Not Applicable

D.	**Required Supplemental Information: Environmental Benefits (Water/Energy Efficiency Measures)**			
1	Describes any proposed "green" business practices relating to energy and climate, water conservation, and materials and waste management	Application	C	Working to implement: solar energy system resulting in fully self-sufficient powered facility; water efficient fixtures; LED lighting; energy efficient appliances
D.	**Required Supplemental Information: Community Benefits**			
1	Describes benefits to local community - employment, community contributions, or economic incentives	Application	C	Community Benefits: 64 Volunteer Time off Hours; non-profit financial assistance; local employment; favor local cannabis businesses
D.	**Required Supplemental Information: Labor and Employment**			
1	Describes heightened pay and benefits standards and practices? Compensation for continuing education and training of employees	Application	NI	Not included in application; applicant refers to heightened pay and benefits outlined in **Labor and Employment plan,** but is not included in application
2	Recognizes collective bargaining rights of employees?	Application	NI	Not included in application
3	Wage scale provided for all employment levels?	Application	C	Employee Hiring Guidelines: $15-$25 for packagers; $42-$62k for manager; $25-$35 for drivers
D.	**Required Supplemental Information: Local Enterprise**			
1	Application states the extent to which business is locally managed and principals reside in Nevada City/County	Application	C	Both owners reside in Nevada County
D.	**Required Supplemental Information: Qualifications of Principals**			
1	Information provided concerning any special business or professional qualifications or licenses of principals that would add to the number or quality of services that the MCB would provide, especially in areas related to medical cannabis, such as scientific or health care fields.	Application	C	Daniel: background in business development and consulting; opened dispensary in San Diego in 2009; extensive knowledge of cannabis industry // Jonathan: extensive dispensary knowledge and experience; holds 17 cannabis licenses across Oregon and California

To Agenda

C = Compliant NC = Non – Compliant NI = Not Included N/A = Not Applicable

CANNABIS DISTRIBUTOR (TYPE 11) FACT SHEET

DISTRIBUTOR: Is responsible for transporting cannabis goods between licensees, arranging for testing of cannabis goods, and conducting the quality assurance review of cannabis goods to ensure compliance with all packaging and labeling requirements. A licensed distributor may only distribute cannabis goods, cannabis accessories, and licensees' branded merchandise or promotional materials.

DISTRIBUTOR REQUIREMENTS

- **Transportation**
  - Only a distributor licensee, their employees, or security personnel may be in a vehicle transporting cannabis goods. All persons in a vehicle transporting cannabis goods shall be 21 years of age or older.
  - All vehicles or trailers used for transportation shall be owned or leased by the licensee in accordance with the Vehicle Code.
  - Other forms of transportation, such as aircraft, watercraft, drone, rail, human-powered vehicles, and unmanned vehicles are prohibited.
  - Prior to transportation, the distributor must ensure that a shipping manifest has been generated and provided to the Bureau and the licensee receiving the cannabis goods, as well as verify that the cannabis goods are accurately reflected in the shipping manifest.
  - A distributor who has not yet obtained access to the California Cannabis Track-and-Trace (CCTT) system shall transmit shipping manifests by email to the Bureau at **bcc@dca.ca.gov** and to the receiving licensee. (More information on shipping manifests may be found in the Shipping Manifest Fact Sheet available on the Bureau's website.)
  - A licensed distributor shall only travel between licensees' premises, except for necessary rest, fuel, or vehicle repair stops, while transporting cannabis goods.
  - If transportation of cannabis goods in a vehicle or trailer is not operationally feasible because transportation would occur between licensed premises that are within the same building or parcel of land, a licensed distributor may transport cannabis goods by foot, hand truck, fork lift, or other similar means, with the requisite shipping manifest.
- **Packaging, Labeling, and Rolling**
  - A licensed distributor may package, re-package, label, and re-label cannabis for retail sale.
  - A licensed distributor may not process cannabis but may roll pre-rolls that consist exclusively of any combination of flower, shake, leaf, or kief. Pre-rolls must be rolled prior to regulatory compliance testing.
  - A licensed distributor may not package, re-package, label, or re-label manufactured cannabis goods, with the exception of labeling and re-labeling a manufactured cannabis goods package with the amount of cannabinoids and terpenoids based on regulatory compliance testing results.
  - All packages of cannabis goods must:
    - Protect the cannabis from contamination.
    - Be tamper-evident.
    - Be resealable if the package contains more than one serving.
    - Not imitate any package used for goods that are typically marketed to children.
  - Beginning January 1, 2020, all packages of cannabis goods must also:
    - Be child-resistant until the package is first opened.
    - Be labeled with the statement "This package is not child-resistant after opening."
  - Immature cannabis plants and seeds are not required to be packaged in child-resistant, tamper-evident, and resealable packaging.

(continued on next page)

- **Testing**
  - After taking physical possession of a cannabis goods batch, the licensed distributor must arrange for laboratory testing and ensure the proper retrieval and documentation of batch samples.
  - Once a sample from a batch has been obtained for regulatory compliance testing, the distributor may not arrange for the re-sampling of the same batch without authorization from the Bureau.
  - Testing Results
    - If the batch passes, the cannabis goods may be transported to one or more retailers or another licensed distributor as described below.
    - If the batch fails and cannot be remediated, the distributor must destroy the batch.
    - If the batch can be remediated, the distributor may arrange for remediation by a licensed manufacturer as authorized by the Bureau and/or the California Department of Public Health (CDPH). (Information on the remediation process is available in section 5727 of the Bureau's regulations and section 40330 of CDPH's regulations.)
- **Transfer of Cannabis Goods**
  - A distributor licensee may transport untested cannabis goods to one or more licensed distributors, licensed manufacturers, licensed cultivators, and/or licensed microbusinesses authorized to engage in distribution, manufacturing, or cultivation.
  - A distributor licensee may only transport untested immature cannabis plants and/or seeds to a licensed retailer or to the retailer portion of a licensed microbusiness.
  - Once testing has been completed, cannabis goods that have an accompanying COA and are packaged as they will be sold at retail may be transferred to one or more licensed distributors, licensed retailers, or licensed microbusinesses authorized to engage in distribution and/or retail.
  - Cannabis goods that have not been transported to retail within 12 months of the date on the COA must be destroyed or retested by the distributor in possession of the cannabis goods.
- **Storage**
  - A licensed distributor may provide storage-only services unrelated to the quality assurance and laboratory testing processes to other licensees.
  - Storage-only services may only be provided for cannabis goods that are packaged as they will be sold at a retailer, cannabis accessories, and a licensees' branded merchandise or promotional materials.
  - A licensed distributor may not store immature cannabis plants, except for seeds.
  - A licensed distributor who arranges for testing of batches shall ensure the batches are stored separately and distinctly from other cannabis goods batches and properly labeled so they can be easily identified.
- **Other Requirements**
  - A licensed distributor must carry and maintain the required coverage for insurance and provide the Bureau with a certificate of insurance and notify the Bureau of any changes.
  - A licensed distributor must be able to account for all inventory and be able to provide the Bureau with the status for each cannabis goods batch in the licensed distributor's possession.
  - A licensed distributor must also ensure all proper records are maintained for at least seven years.

Bureau of Cannabis Control
2920 Kilgore Road
Rancho Cordova, CA 95670
E bcc@dca.ca.gov | **P** (833) 768-5880

City of Nevada City

TO: Planning Commission

FROM: Amy Wolfson, City Planner

MEETING DATE: February 20, 2020

RE: AMENDED APPLICATION: Floracy, Inc – Phased Medical Cannabis Manufacturing and Distribution Business- Amendment to allow full-distribution, as opposed to only self-distribution

ATTACHMENTS:

1. Redacted Application with Amended Material Inserted
2. Amended Conditions of Approval

PROPOSED APPLICATION AMENDMENT: Floracy, Inc is managed by Harry Bennett, Patty Lawrence, and Phil Ritti. The subject application was originally approved by the planning commission at their January 18, 2018 meeting for the operation of an ethanol extraction manufacturing and self-distribution business at 138 New Mohawk in suite 2. To date, Floracy has received a permit to operate the self-distribution component only. Floracy has submitted a request to update their operation to include full distribution, which will allow them to distribute licensed cannabis products for and between any licensed business, as opposed to only their own licensed product.

Notification and an invitation to review and comment on the revised application was sent to the Fire Chief, the Police Chief, the City Attorney, the City Engineer, the City Manager, the Environmental Health Department, the Building Department, and to the Planning Commissioners. A redacted version of the application, with amendment material inserted, is attached to the staff report. The amended changes did not result in any changes to the prior conditions of approval approved at the January18, 2018 meeting. However, staff has amended Condition B.2 to reflect the City Engineer's revised standard condition regarding waste discharge and added Condition A.8 to reflect a standard parking condition requiring that business parking be provided on-site.

RECOMMENDED MOTIONS:

Make a Motion to approve the amended application as presented to authorize the addition of full-distribution activity to their previously authorized application and business operation, subject to the updated Conditions of Approval, attached, as may be modified by the planning commission, making the following findings

a) As presented and conditioned, there is no reasonable argument that approval of the amended application is likely to be detrimental to the city, taking into account any health, safety, and welfare impacts on the community.

b) Finding that the amended application is consistent with Chapter 9.22 of the Nevada City Municipal Code.

FLORACY

315 Spring Street., Suite D
Nevada City, CA 95959

Nov. 21, 2017

Amy Wolfson
City Planner
City of Nevada City
317 Broad St.
Nevada City, CA 95959

Dear Amy:

We are submitting our application for a medical cannabis manufacturing permit.

We have researched the new state cannabis regulations regarding the application process for a state cannabis manufacturing license.

The state will offer temporary licenses as of Jan. 1, 2018. The prerequisite for applying for a state license is a local permit or other form of authorization. In regards the other form of authorization, our interpretation of the state's language is that a letter written by the city will meet the state's requirements. We would greatly appreciate your writing a letter to the state that would include the following:

- Nevada City has received an application from Floracy for a local permit to manufacture cannabis products
- The application is currently under review
- Provided Floracy meets all the city's permit requirements, the city intends to grant a cannabis manufacturing permit to Floracy.

We have no intention of circumventing Nevada City's permit requirements. We simply want to comply with the state's process and a temporary license is the first step in obtaining a full license. We acknowledge that Floracy will still have to meet all the city's requirements before we will be issued approvals to operate.

Please let me know if you need any additional information.

Best regards,

Harry Bennett
President

ORIGINAL

FLR-Mnv.Ds-2

City of Nevada City

Staff Use

Fee:$_____

Date Paid:_____

Planning Department
317 Broad Street, Nevada City CA 95959

Phone: 530-265-2496
Email: Amy.Wolfson@NevadaCityCA.gov

MEDICAL CANNABIS BUSINESS PERMIT APPLICATION FORM

(dispensary applicants, use other specific application form)

Please submit a minimum of **five (5) bound hard copies** and **one (1) digital copy** (usb drive or CD) of all application material.

Check business type being proposed. If multiple types are proposed, each type will need to be distinctly addressed in the supplemental documentation and on this form. A separate form may be submitted if it will help provide clarity.

X Manufacturing

___ Cultivation

___ Testing Laboratory

___ Testing

X Transportation

N/A Dispensary (use separate form)

Business Name: FLORACY, INC.

Business Primary Contact: HARRY BENNETT

Contact Title: PRESIDENT

Contact's Mailing Address: 315 SPRING ST., SUITE D
NEVADA CITY, CA 95959

Phone#: (530) 264-7592 **E-mail:** [redacted]

24-Hour Contact Information: [redacted]

For details about the information required as part of the application process, please see the Implementation Procedures to Operate a Medical Cannabis Business in Nevada City, Ordinance No. 2017-06 and additional requirements in order to complete the application process. All these documents can be found on the Nevada City webpage: www.NevadaCityCA.gov

To Agenda

ORIGINAL

Section A: Principal Background Information (Must be signed by all Principals)

(Add more pages as necessary to accommodate signatures of all Medical Cannabis Business Principals.)

Under penalty of perjury, I acknowledge that I have personal knowledge of the information stated in this application and that the information contained herein is true. I also understand that the information provided in this application, except the Safety and Security Plan in Section C and certain confidential information such as driver's license and social security number, which can be redacted, may be public information and subject to disclosure under the California Public Records Act.

Principal Name: Harry L. Bennett

Principal Title: President

Principal Home or Cell Phone: [redacted]

Principal Home Address: [redacted]

Principal Signature: Harry Bennett Date: 11-21-17

Attachments:

____If business will operate as a collective/cooperative provide proof of status as a qualified patient or primary caregiver (State card or doctor recommendation)

____Receipt from Live Scan check

✓ Picture of applicant (two passport quality photographs 2X2)

✓ Copy of Social Security Card

✓ Copy of Driver's License, OMV issued ID Card or Passport

✓ Proof of address (DMV-issued ID/driver's license, and/or recent utility bill under Principal's name)

Staff use only: Pass background check_____

****

Principal Name: PATRICIA (PATTY) LAWRENCE

Principal Title: OPERATIONS MANAGER

Principal Home or Cell Phone: [redacted]

Principal Home Address: [redacted]

Principal Signature: Patty L Date: 11/21/17

Attachments:

____If business will operate as a collective/cooperative provide proof of status as a qualified patient or primary caregiver (State card or doctor recommendation)

____Receipt from Live Scan check

✓ Picture of applicant (two passport quality photographs 2X2)

✓ Copy of Social Security Card

✓ Copy of Driver's License, OMV issued ID Card or Passport

✓ Proof of address (DMV-issued ID/driver's license, and/or recent utility bill under Principal's name)

Staff use only: Pass background check_____

ORIGINAL

Section A: Principal Background Information (Must be signed by all Principals)

(Add more pages as necessary to accommodate signatures of all Medical Cannabis Business Principals.)

Under penalty of perjury, I acknowledge that I have personal knowledge of the information stated in this application and that the information contained herein is true. I also understand that the information provided in this application, except the Safety and Security Plan in Section C and certain confidential information such as driver's license and social security number, which can be redacted, may be public information and subject to disclosure under the California Public Records Act.

Principal Name: PHILIP M. RITTI

Principal Title: CFO

Principal Home or Cell Phone: [redacted]

Principal Home Address: [redacted]

Principal Signature: [signature] Date: 11-21-17

Attachments:

____If business will operate as a collective/cooperative provide proof of status as a qualified patient or primary caregiver (State card or doctor recommendation)

____Receipt from Live Scan check

✓ Picture of applicant (two passport quality photographs 2X2)

✓ Copy of Social Security Card

✓ Copy of Driver's License, OMV issued ID Card or Passport

✓ Proof of address (DMV-issued ID/driver's license, and/or recent utility bill under Principal's name)

Staff use only: Pass background check_____

****

Principal Name:_____

Principal Title:_____

Principal Home or Cell Phone: _____

Principal Home Address:_____

Principal Signature:_____ Date:_____

Attachments:

____If business will operate as a collective/cooperative provide proof of status as a qualified patient or primary caregiver (State card or doctor recommendation)

____Receipt from Live Scan check

____Picture of applicant (two passport quality photographs 2X2)

____Copy of Social Security Card

____Copy of Driver's License, OMV issued ID Card or Passport

____Proof of address (DMV-issued ID/driver's license, and/or recent utility bill under Principal's name)

Staff use only: Pass background check_____

ORIGINAL

FLR-Mnv.Ds-5

[redacted]

To Agenda

ORIGINAL

FLR-Mnv.Ds-6

xfinity

Harry Bennett

Account number
[redacted]

For service at:
[redacted]

Thanks for choosing XFINITY from Comcast

Bill date Aug 17, 2017
Services from Aug 22, 2017 to Sep 21, 2017

Your monthly account summary

Previous balance	[redacted]
Credit Card Payment Aug 08, 2017	[redacted]
Balance forward	[redacted]
New charges	
Bundle	[redacted]
Additional services and equipment	[redacted]
Other charges and credits	[redacted]
Taxes and fees	[redacted]
Balance forward	[redacted]
New charges due Sep 08, 2017	[redacted]
Total amount due	[redacted]

To Agenda

ORIGINAL

FLR-Mnv.Ds-7

[redacted]

Bill date Oct 15, 2017
Services from Oct 20, 2017 to Nov 19, 2017

Your monthly account summary

Previous balance	[redacted]
No payment received	[redacted]
Balance forward	
New charges	
Bundle	[redacted]
Additional services and equipment	[redacted]
Taxes and fees	
Balance forward	[redacted]
New charges due Nov 06, 2017	[redacted]
Amount due	

To Agenda

ORIGINAL

FLR-Mnv.Ds-8

CONFIDENTIAL

CALIFORNIA DRIVER LICENSE

[redacted]

To Agenda

Principal/Partner History:

1. List whether, the applicant(s) has other licenses and/or permits issued to and/or revoked from the applicant, in the three years prior to the year of the permit application, such other licenses and or permits relating to similar business activities as in the permit application. If yes, please list the type, current status, issuing/denying for each license/permit. (Please attach a separate document explanation if necessary)

N/A

2. List any and all partners who have been found guilty of a violent felony, a felony or misdemeanor involving fraud, deceit, embezzlement, or moral turpitude, or the illegal use, possession, transportation, distribution or similar activities related to controlled substances, as defined in the Federal Controlled Substance Act, with the exception of medical cannabis related offenses for which the conviction occurred after the passage of the Compassionate Use Act of 1996. (Please attach a separate document explanation if necessary)

N/A

Section B: Business Organization Status

1. Describe the Medical Cannabis Business organizational status:

FLORACY, INC. IS A CALIFORNIA C-CORPORATION
SEE: EXHIBIT 1 FOR ARTICLES OF INCORPORATION.
EXHIBIT 1(a) FEIN NO.
EXHIBIT 1(b) CERTIFICATE OF LIABILITY INSURANCE

☑ Attach proof of status, such as articles of incorporation, by-laws, partnership agreements, and other documentation as may be appropriate or required by the City.

Section C: Medical Cannabis Business Description and Location

1. Statement of Purpose of Medical Cannabis Business (a separate sheet may be attached, labeled Section C.1):

FLORACY MANUFACTURES, PACKAGES & DISTRIBUTES CANNABIS CONCENTRATES & DERIVATIVE PRODUCTS WITHIN THE REGULATED CALIFORNIA MEDICAL CANNABIS INDUSTRY.

ORIGINAL

FLR-Mnv.Ds-10

2. Proposed Location of Business: 75 BOST AVE, UNIT 2, NEVADA CITY, CA 95959

3. Name and address of property owner: KURT PINKHAM

[redacted]

SEE EXHIBIT 2 FOR OWNER ACKNOWLEDGEMENT OF CANNABIS BUSINESS.

4. Name and address of school(s) and/or public park(s) closest to Proposed Location:

SCHOOL: FORREST CHARTER SCHOOL (BEYOND 600 FT)

PARK: PIONEER PARK (BEYOND 600 FT)

5. Have you received a Zoning Verification Letter? (Please check the appropriate response)
Yes_____(If yes, include documentation with this section of the application) No ✓

WRITTEN REQUEST VIA EMAIL TO AMY WOLFSON FOR ZONING VERIFICATION LETTER.

6. Description of neighborhood around the proposed location surrounding uses, nearby sensitive uses (such as schools, churches, parks, daycares, or residents), transit access to site, etc. A separate sheet may be attached and labeled Section C.6.

THERE ARE NO SENSITIVE USES WITHIN 600 FT. OF OUR LOCATION.
SURROUNDING OUR LOCATION ARE COMPLEXES OF INDUSTRIAL BUSINESSES INCLUDING THE ELEVATION 2477 CANNABIS DISPENSARY.

7. Site plan must be dimensioned and show the entire parcel including parking and additional structures [recommended scale of **1"= 20'**]. In addition, please attach elevations and photos of proposed location. If any exterior alterations are proposed for the existing building, also attach a *proposed* site plan that is accurate, dimensioned and to-scale for each potential location and include elevation details. The scale should accommodate an accurate site plan on a sheet of paper no larger than 11X17. SEE EXHIBIT 3

8. Floor Plans shall be attached and shall be accurate, dimensioned and to-scale [recommended scale of **1/4"= 1'**] for each potential location. If any interior alterations are proposed for the existing building, also attach *proposed* floor plans. The scale should accommodate an accurate floor plan on a sheet of paper no larger than 11X17. SEE EXHIBIT 4

9. Signage Plan. – SEE EXHIBIT 5

10. Vicinity Map. – SEE EXHIBIT 6

11. Photos of the site and building(s). – SEE EXHIBIT 7

To Agenda

ORIGINAL

SEE APPLICATION BINDER FOR DETAILS

Section D: Required supplemental information

This information is required for this application to be considered complete. Attach the following reports to the application.

- [ ] Business and Parking Plan
- [ ] Neighborhood Compatibility Plan
- [ ] Safety and Security Plan
- [ ] Environmental Benefits (Water/Energy Efficiency Measures)
- [ ] Community Benefits
- [ ] Labor and Employment
- [ ] Local Enterprise
- [ ] Qualifications of Principals

ORIGINAL

STAFF USE ONLY:

Date of initial application:_____

File Number assigned to application:

_____

Date fee received _____

Date application reviewed for completeness:

_____

☐ Complete ☐ Incomplete

Date Proof of ownership was verified or a signed and notarized statement from the property owner was received

_____

Date application reviewed by Planning Commission:_____

☐ Approved ☐ Denied

ORIGINAL

Exhibit 1

FLR-Mov Ds-13

4053067

ARTS-GS

Secretary of State
Articles of Incorporation of a General Stock Corporation

IMPORTANT — Read Instructions before completing this form.

Filing Fee – $100.00

Copy Fees – First page $1.00; each attachment page $0.50; Certification Fee - $5.00

Note: Corporations may have to pay minimum $800 tax to the California Franchise Tax Board each year. For more information, go to *https://www.ftb.ca.gov*.

FILED
Secretary of State
State of California
AUG 07 2017

This Space For Office Use Only

1. Corporate Name (Go to *www.sos.ca.gov/business/be/name-availability* for general corporate name requirements and restrictions.)

The name of the corporation is Floracy, Inc.

2. Business Addresses (Enter the complete business addresses.)

a. Initial Street Address of Corporation - **Do not list a P.O. Box**	City (no abbreviations)	State	Zip Code
315 Spring Street, Suite D	Nevada City	Ca	95959
b. Initial Mailing Address of Corporation, **If different than item 2a**	City (no abbreviations)	State	Zip Code

3. Service of Process (Must provide either Individual OR Corporation.)

INDIVIDUAL – Complete Items 3a and 3b only. Must include agent's full name and California street address.

a. California Agent's First Name (if agent is not a corporation)	Middle Name	Last Name	Suffix
Robert	D	Finkle	

b. Street Address (if agent is not a corporation) - **Do not enter a P.O. Box**	City (no abbreviations)	State	Zip Code
11501 Dublin Blvd, Suite 200	Dublin	CA	94568

CORPORATION – Complete Item 3c. Only include the name of the registered agent Corporation.

c. California Registered Corporate Agent's Name (if agent is a corporation) – Do not complete Item 3a or 3b

4. Shares (Enter the number of shares the corporation is authorized to issue. **Do not leave blank or enter zero (0).**)

This corporation is authorized to issue only one class of shares of stock.

The total number of shares which this corporation is authorized to issue is [redacted].

5. Purpose Statement (Do not alter the Purpose Statement.)

The purpose of the corporation is to engage in any lawful act or activity for which a corporation may be organized under the General Corporation Law of California other than the banking business, the trust company business or the practice of a profession permitted to be incorporated by the California Corporations Code.

6. Read and Sign Below (This form must be signed by each incorporator. **See instructions for signature requirements.**)

Signature

Robert D. Finkle
Type or Print Name

To Agenda

IRS.gov

EIN Assistant

5. EIN Confirmation

Congratulations! The EIN has been successfully assigned.

EIN Assigned: **82-3475096**

Legal Name: **FLORACY INC**

The confirmation letter will be mailed to the applicant. This letter will be the applicant's official IRS notice and will contain important information regarding the EIN. Allow up to 4 weeks for the letter to arrive by mail.

We strongly recommend you print this page for your records.

Click "Continue" to get additional information about using the new EIN. Continue >>

Help Topics

Can the EIN be used before the confirmation letter is received?

ORIGINAL Exhibit 16

FLR-Mnv.Ds-15

ACORD CERTIFICATE OF LIABILITY INSURANCE

DATE (MM/DD/YYYY) 11/05/2017

THIS CERTIFICATE IS ISSUED AS A MATTER OF INFORMATION ONLY AND CONFERS NO RIGHTS UPON THE CERTIFICATE HOLDER. THIS CERTIFICATE DOES NOT AFFIRMATIVELY OR NEGATIVELY AMEND, EXTEND OR ALTER THE COVERAGE AFFORDED BY THE POLICIES BELOW. THIS CERTIFICATE OF INSURANCE DOES NOT CONSTITUTE A CONTRACT BETWEEN THE ISSUING INSURER(S), AUTHORIZED REPRESENTATIVE OR PRODUCER, AND THE CERTIFICATE HOLDER.

IMPORTANT: If the certificate holder is an ADDITIONAL INSURED, the policy(ies) must be endorsed. If SUBROGATION IS WAIVED, subject to the terms and conditions of the policy, certain policies may require an endorsement. A statement on this certificate does not confer rights to the certificate holder in lieu of such endorsement(s).

PRODUCER
S2S INSURANCE SERVICES LLC
1860 HOWE AVE STE 350
SACRAMENTO, CA
95825

CONTACT NAME: JJ PAY
PHONE (A/C, No, Ext): 916-538-9727 FAX (A/C, No):
E-MAIL ADDRESS: JJ@S2SINSURANCE.COM

INSURER(S) AFFORDING COVERAGE	NAIC #
INSURER A : James River Insurance Company	12203
INSURER B :	
INSURER C :	
INSURER D :	
INSURER E :	
INSURER F :	

INSURED
FLORACY, INC
75 Bost Avenue, Unit B
Nevada City, CA 95959

COVERAGES CERTIFICATE NUMBER: REVISION NUMBER:

THIS IS TO CERTIFY THAT THE POLICIES OF INSURANCE LISTED BELOW HAVE BEEN ISSUED TO THE INSURED NAMED ABOVE FOR THE POLICY PERIOD INDICATED. NOTWITHSTANDING ANY REQUIREMENT, TERM OR CONDITION OF ANY CONTRACT OR OTHER DOCUMENT WITH RESPECT TO WHICH THIS CERTIFICATE MAY BE ISSUED OR MAY PERTAIN, THE INSURANCE AFFORDED BY THE POLICIES DESCRIBED HEREIN IS SUBJECT TO ALL THE TERMS, EXCLUSIONS AND CONDITIONS OF SUCH POLICIES. LIMITS SHOWN MAY HAVE BEEN REDUCED BY PAID CLAIMS.

INSR LTR	TYPE OF INSURANCE	ADDL INSR	SUBR WVD	POLICY NUMBER	POLICY EFF (MM/DD/YYYY)	POLICY EXP (MM/DD/YYYY)	LIMITS	
	GENERAL LIABILITY						EACH OCCURRENCE	$ [redacted]
	X COMMERCIAL GENERAL LIABILITY						DAMAGE TO RENTED PREMISES (Ea occurrence)	$ [redacted]
	X CLAIMS-MADE OCCUR						MED EXP (Any one person)	$ [redacted]
		Y	Y	#CA4351020 -57	11/01/2017	11/01/2018	PERSONAL & ADV INJURY	$ [redacted]
							GENERAL AGGREGATE	$ [redacted]
	GEN'L AGGREGATE LIMIT APPLIES PER: POLICY PROJECT LOC						PRODUCTS - COMP/OP AGG	$ [redacted]
								$
	AUTOMOBILE LIABILITY						COMBINED SINGLE LIMIT (Ea accident)	$
	ANY AUTO						BODILY INJURY (Per person)	$
	ALL OWNED AUTOS / SCHEDULED AUTOS						BODILY INJURY (Per accident)	$
	HIRED AUTOS / NON-OWNED AUTOS						PROPERTY DAMAGE (Per accident)	$
								$
	UMBRELLA LIAB / OCCUR						EACH OCCURRENCE	$
	EXCESS LIAB / CLAIMS-MADE						AGGREGATE	$
	DED / RETENTION $							$
	WORKERS COMPENSATION AND EMPLOYERS' LIABILITY						WC STATUTORY LIMITS / OTHER	
	ANY PROPRIETOR/PARTNER/EXECUTIVE OFFICER/MEMBER EXCLUDED? (Mandatory in NH) Y/N n	N/A					E.L. EACH ACCIDENT	$
	If yes, describe under DESCRIPTION OF OPERATIONS below						E.L. DISEASE - EA EMPLOYEE	$
							E.L. DISEASE - POLICY LIMIT	$

DESCRIPTION OF OPERATIONS / LOCATIONS / VEHICLES (Attach ACORD 101, Additional Remarks Schedule, if more space is required)

Legal Cannabis Operation (indoor manufacturing with possible distribution)

CERTIFICATE HOLDER

Harry Bennet (Owner)
75 Bost Avenue, Unit B
Nevada City, CA
95959

CANCELLATION

SHOULD ANY OF THE ABOVE DESCRIBED POLICIES BE CANCELLED BEFORE THE EXPIRATION DATE THEREOF, NOTICE WILL BE DELIVERED IN ACCORDANCE WITH THE POLICY PROVISIONS.

AUTHORIZED REPRESENTATIVE

© 1988-2010 ACORD CORPORATION. All rights reserved.
The ACORD name and logo are registered marks of ACORD

ORIGINAL Exhibit 2

FLR-Mnv.Ds-16

Kurt Pinkham
[redacted]

Nov 21, 2017

Re: 75 Bost Ave., Unit 2
Nevada City, CA 95959

To Whom It May Concern:
Pleased by advised, as owner of the referenced property, I have agreed to Lease Unit 2 at 75 Bost Ave. to Floracy, Inc. for the purpose of manufacturing cannabis products.

If you have any questions regarding this matter, please contact me.

Best Regards,

Kurt Pinkham

To Agenda

ORIGINAL

Exhibit 3 Site Plan

FLR-Mnv.Ds-17

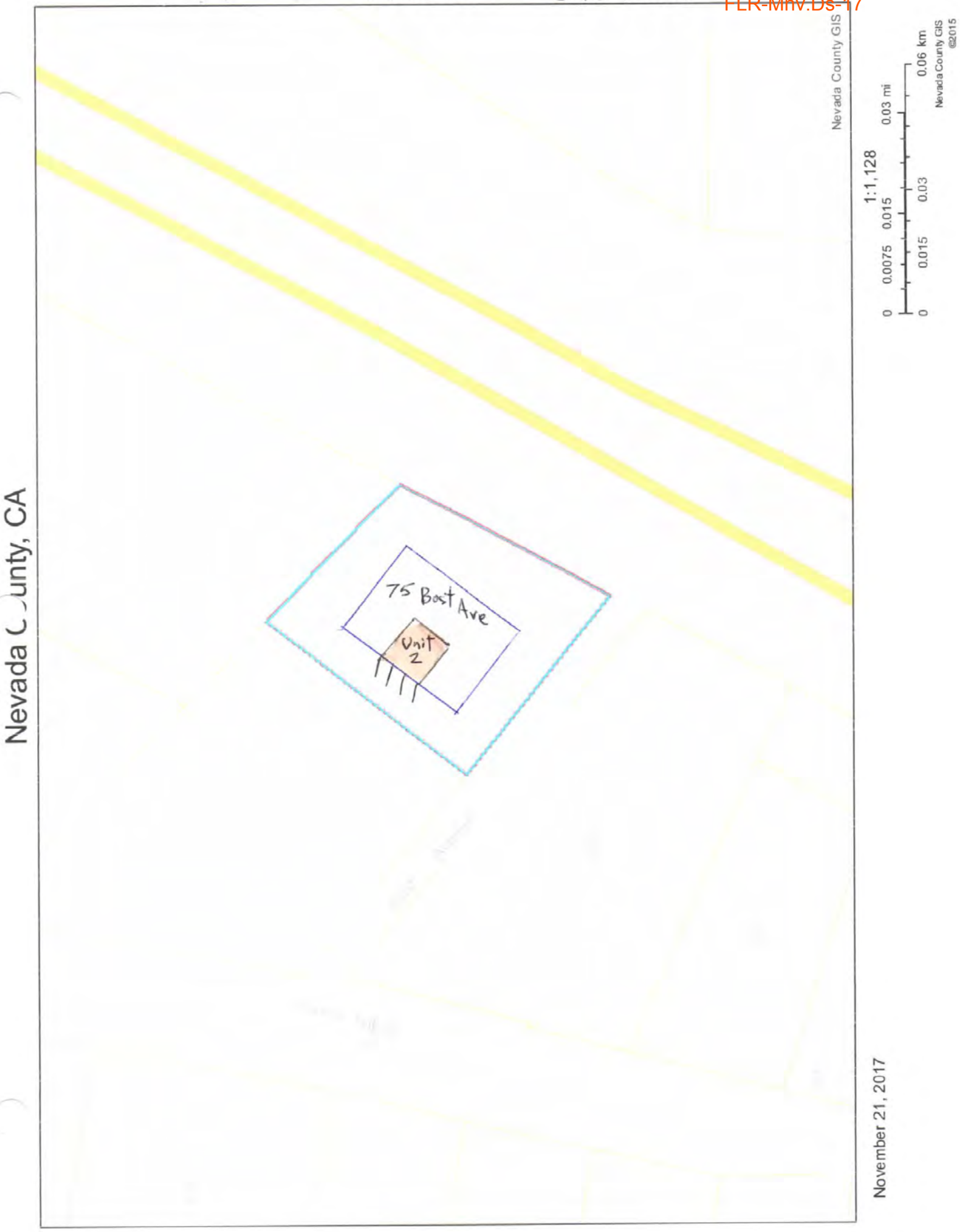

To Agenda

ORIGINAL

FLR-Mnv.Ds-18

Exhibit 4

Proposed Floor Plans.

[redacted]

EXHIBIT 2
SIGNAGE PLAN

FLR-Mnv.Ds-19

ORIGINAL Exhibit # 5

To Agenda

FLR-Mnv.Ds-20

ORIGINAL

Exhibit B 96

Vicinity Map

PTN. N.E. 1/4 SEC. 13, T. 16 N., R. 8 E., M.D.B. & M.

Tax Area Code
2-002
68-032 (road)

5-28

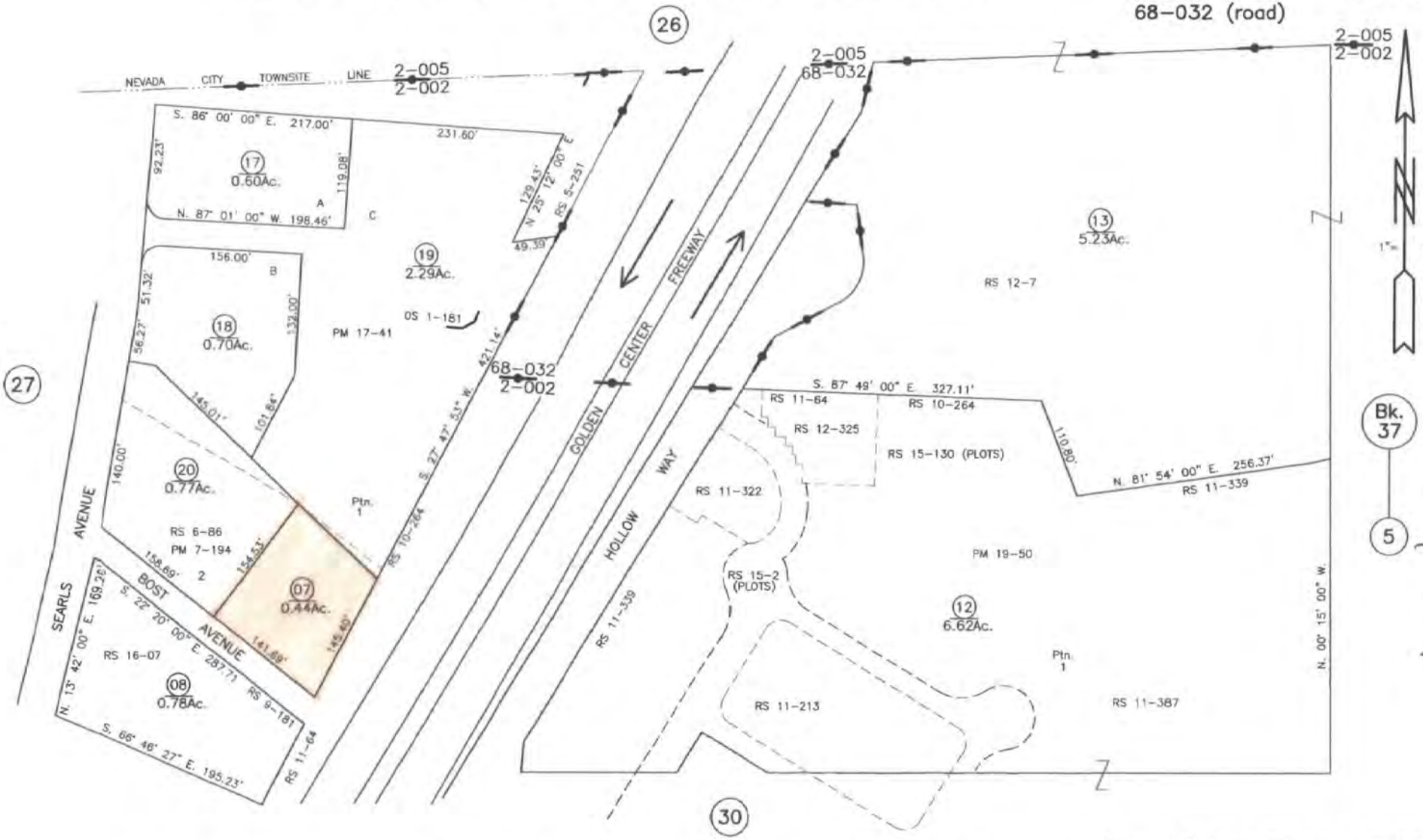

ARGALL-IVEY ADDITION O.S. Bk. 1, Pg. 181
NEVADA CITY ANNEX No. 38 R.S. Bk. 9, Pg. 181
NEVADA CITY ANNEX No. 47 R.S. Bk. 11, Pg. 339

ASSESSOR'S PARCEL MAP
This map was prepared for assessment purposes only. No liability is assumed for the accuracy of data shown. Assessor's parcels may not comply with local lot-split or building site ordinances.

Assessor's Map Bk. 5 -Pg. 28
County of Nevada, Calif.
2000

LAST UPDATE: 03-09-16

TM 03/16

To Agenda

FLR-Mnv.Ds-21

ORIGINAL

7

To Agenda

ORIGINAL

EXHIBIT 8

FLB-Mnv.Ds-22

Table: Sales Forecast

Sales Forecast

	2017	2018	2019	2020	2021
Unit Sales	[redacted]				
Unit Prices	2017	2018	2019	2020	2021
	[redacted]				
Sales	[redacted]				
Row 3	$0	$0	$0	$0	$0
	[redacted]				
Direct Unit Costs	2017	2018	2019	2020	2021
	[redacted]				
Direct Cost of Sales	[redacted]				

To Agenda

ORIGINAL

FLR-Mnv.Ds-23

Table: Personnel

Personnel Plan

	2017	2018	2019	2020	2021
[redacted]					

ORIGINAL

FLR-Mnv.Ds-24

Table: Profit and Loss

[redacted]

To Agenda

ORIGINAL

FLR-Mnv.Ds-25

[redacted]

To Agenda

ORIGINAL

FLR-Mnv.Ds-26

[redacted]

To Agenda

ORIGINAL

FLR-Mnv.Ds-27

To Agenda

ORIGINAL

FLR-Mnv.Ds-28

To Agenda

ORIGINAL

FLR-Mnv.Ds-29

Table: Balance Sheet

[redacted]

To Agenda

ORIGINAL

FLR-Mnv.Ds-30

11/21/2017

Floracy Cannabis Manufacturing &Distribution Permit Application

Nevada City, California

To Agenda

Table of Contents

Medical Cannabis Business Permit Application Form 3
Scope of Application 3
Cannabis manufacturing permit 3
Distribution Permit 3
Business and Parking Plan 3
Description of day-to-day operations 3
How Floracy will conform to local and state law 3
How medical cannabis will be tracked and monitored to prevent diversion 4
Parking Plan 4
A schedule for beginning operation 4
Budget 5
Neighborhood Compatibility Plan 5
Safety and Security Plan 5
Safety Plan 5
General statements: 5
Fire Suppression: 5
Employee Safety: 5
Security Plan 6
Environmental Benefits 8
Community Benefits 8
Tax Revenue 8
Local Employment 8
Charitable Donations 8
Local commerce 8
Labor and Employment 9
General Considerations 9
Workplace Environment and Culture 9
Hiring and Background Checks 9
Compensation 9
Employee Benefits 10
CONTINUING EDUCATION 10
Employee Communications 10

ANTI-DISCRIMINATION POLICY 10
SEXUAL HARASSMENT POLICY 11
DRUG FREE WORKPLACE 11
SAFETY & SECURITY: STANDARDS AND EXPECTATIONS 11
COLLECTIVE BARGAINING RIGHTS 11
Local Enterprise 11
Local Employment Strategy 11
Supporting Local Business 12
PROMISE TO PROCURE LOCAL PRODUCTS 12
Qualification of Principals 13

Floracy Cannabis Manufacturing Permit Application

Medical Cannabis Business Permit Application Form

See application form in application binder.

Scope of Application

Cannabis manufacturing permit

Floracy is applying for a permit to manufacture concentrated cannabis oil and derivative products.

Distribution Permit

Floracy is also applying for a distribution permit. We will choose the self-distribution option from the state. This will allo` Florac. to tra sport produt et e e ul tivators, testing labs ad Flora y's facilities. The self-distribution option does not allow Floracy to distribute products for other companies.

Therefore, our application does not include a separate distribution business plan. We will only use the self-distribution liese to tra sport Flora y's produts and that impact is in the manufacturing business plan.

Business and Parking Plan

Description of day-to-day operations

Floracy manufactures and provides high CBD cannabis oil to permitted dispensaries in Sacramento, Oakland, Berkeley and San Francisco. We plan to add more dispensaries to our customer base over the next few years.

Floracy procures dried cannabis flower as raw material and converts the cannabis flower to a concentrated oil through an extraction process that uses ethanol. The concentrated oil is then packaged into individual oral applicator containing 1 gram of concentrated oil.

The specific strains of high CBD cannabis are grown under contract by permitted cultivators in Calaveras and Yolo counties using seeds, seedlings and/or clones recommended by Floracy.

Cannabis products to be manufactured include the following:

- [redacted].

How Floracy will conform to local and state law

Floracy will comply fully with local and state laws. Flora's legal ounsel, Robert Finkle & Assoi ates specializes in California cannabis law, and his services included detailed knowledge of state and local regulatory odes. Flora y's staff ur retl y follos the e erging a na is regulations ver thoroughl and monitors changes made to California law. We have had to wait to submit our application until the latest state regulations were issued on Nov 16.

Floracy will first obtain a permit from Nevada City and then apply for a state license. The permitting process and the startup activities will cost [redacted] giving the entire Floracy team the added incentive to be 100% compliant with state law.

How medical cannabis will be tracked and monitored to prevent diversion

Floracy will purchase and utilize soft are that i ll interfae i th the State of Califor ia's METRC track and trace system to ensure compliance and prevent diversion. Physical security will be aided by a video surveillance system to satisfy the monitoring requirements of state law.

Parking Plan

There are 3 parking spaces available for Floracy employees and visitors. In addition, there are a pool of spaces in the back of the building that are available on a first-come, first-served basis. We believe that exceeds our requirements for daily parking needs.

A schedule for beginning operation

Floracy is proposing a two-phased approval process for our cannabis operations.

- Phase I: Storage and packaging
  - These operations have no significant safety issues and, therefore, can be started prior to the approval of our extraction process.
- Phase II: Extraction
  - Floracy uses an ethanol based manufacturing process. Although the new state regulations have classified ethanol as a non-volatile solvent, the manufacturing system will require additional engineering and time to complete due to its complexity and Flora' s ommit et t o overall safety

October (Accomplished)

- Complete business plan
- Order long lead equipment components
- Secure a site in required LI zoning

November

- Submit application to Nevada City Planning Department.

December

- Obtain permit from Planning Commission
- Complete architectural plans
- Make leasehold improvements
- Complete local inspections
- Obtain local permit

January

- Obtain temporary state license
- Install manufacturing equipment
- Pass required inspections
- Begin using new manufacturing process

February

- Obtain full (annual) state license

Budget

See Exhibit 8 for detailed proforma financial statements

Neighborhood Compatibility Plan

The building complex in which Floracy is located contains two service businesses and one wholesale manufacturer. The building is bordered by Highway 49, two warehouse lots and an empty lot. Our visible activity and traffic levels will be minimal and similar to existing neighboring businesses.

Categorically, we will practice an open-door policy with our neighbors making our plans transparent. We plan to contact each of our immediate business neighbors to inform them of our plans and identify any concerns they may have.

Safety and Security Plan

Safety Plan

General statements:

Floracy has enlisted the help of technical professionals in designing our approach to safety including:

- Al McKensie Senior Partner, Process Safety Associates
- Ray Van Lenten CEO, TruSteel
- Tom Christy Founder, T. Christy Enterprises (large manufacturer of adhesives,
- solvents and sealants)
- Mark Hermes Licensed California Histocompatibility Scientist (CHS) -
- Ray Darby CEO, Sustainable Energy Group
- Michael C Melas Principal, Melas Engineering

Fire Suppression:

Floracy will develop a fire suppression plan in conjunction with a certified fire suppression company and Ne ada City's fire hief. This pla ill ompl i th the National Fire Protet ion Assoi ation NFPA. There is a new section, Chapter 38 in the 2018 regulations that specifically covers cannabis manufacturing. A fire suppression plan cannot be formulized. It needs to be designed for the specific equipment we will use in a specific location.

We need a locally approved fire suppression plan that meets NFPA regulations in order to obtain a state license.

Employee Safety:

Flora' s top ompa y priorit is to provide a safe, secure a d health ork environmet.

Flora' s safety plan is built around the folloi g principle:

- Prevention
- Mitigation
- Response

Floracy has engaged safety, fire and systems engineering experts for the design and construction of manufacturing systems and the facility in order to develop a thorough and effective safety plan.

The core of Flora y's safety plan is training and adherence to the following:

- Equipment operation and safety procedures
- Emergency procedures
- Security plan

Floracy will develop a written Injury and Illness Prevention (IIP) plan using CAL-OSHA guidelines. The IIP will contain the following elements:

- Responsibility - the employer's ri tte IIP Progra ust provide the name a d/or job title of the person(s) with the authority and responsibility for its implementation. Employees must be able to give the name of the individual whose title is designated as responsible for the IIP Program.
- Compliance - a system must be set forth in writing to ensure that employees comply with safe and healthful work practices. Communication - a system for communicating with employees about safety and health matters in a form easily understood such as meetings, training progra s, posted or ri tten o tifiati on must e part of the employer's ritte II P Program. Employees must be encouraged to inform their employer of hazards at the work site without fear of reprisal. Hazard assessment - procedures for identifying and evaluating workplace hazards - such as periodic inspections performed by a competent observer - must be provided in the IIP Program. In addition, we will have written Standard Operating Procedures (SOPS) for all major manufacturing processes.
- Accident/exposure investigation - a procedure to investigate workplace injuries or illnesses will be provided in the IIP. Hazard correction - methods and procedures for correcting all existing workplace hazards, and unsafe or unhealthful work conditions or work practices in a timely manner must be provided in the IIP, and specific abatement methods must also be included.
- Training and instruction - an effective program of instructing employees on general safe work practices and hazards specific to each job assignment must be provided in the IIP, and the required training must be given.
- Keeping records - there must be adequate written documentation of the steps taken to establish and maintain the employer's IIP Progra . For the IIP Program to be effective, you need to make the program to e spei fi to your orkpla e a d: • involve all employees, supervisors, ad ma agemet • ide tif all of the orkpla e hazards • o rret the ideti fied hazards in a timely ma ner • provide effe tive training • regularly revie a d update the IIP program Re ember, how well you actually put into practice your

Security Plan

Flora' s seur it plan first e phasizes pre eti ng a ess to the ma ufaturi ng pre ises by unauthorized personnel to protect the physical safety of our employees and the protection of our asserts through the use of physical barriers. All doors and locks shall be commercial grade and windows will be secured against intrusion by unauthorized personnel. Floracy will employ an employee badge

system whereby employees will be able to access areas of the manufacturing premises for which they have authorization.

Floracy will install a security alarm system to notify and record incidents where physical barriers have been breached. The video surveillance system will feature cameras with a minimum resolution of 1280x720 pixels and be able to effectively and clearly record images of the area under surveillance. The video surveillance system will be capable of supporting remote access by Floracy. To the extent reasonably possible, all video surveillance cameras will be installed in a manner that prevents intentional obstruction, tampering with, and/or disabling. Areas that will be recorded on the video surveillance system include, but are not limited to the following:

Areas where cannabis or cannabis products are weighed, packed, stored, quarantined, loaded and/or unloaded for transportation, prepared or moved within the premises:

- Limited-access areas
- Security rooms
- Areas containing surveillance-system storage devices, in which case, at least one camera will record the access points to such areas
- The interior and exterior of all entrances and exits to the premises

The surveillance systems will record continuously 24 hours per day and at a minimum rate of 15 frames per second

All recording and monitoring equipment will be located in secure rooms or areas of the premises in an access-controlled environment.

All surveilla ce reo rdings i ll e kept on the lies ee's recording de ie for a inimum of 90 das

All ideo sur eilla e recordings are su je t to isp e tion the state's a na is bureau ad ill e copied and sent, or otherwise provided, to the bureau upon request.

The video recordings will display the current date and time of recorded events and their display will not specifically obstruct the view of the recorded images

Floracy will secure and backup electronic records in a manner that prevents unauthorized access while ensuring the integrity of the records maintained. Floracy will have on-site and Cloud backups of the recorded data.

Floracy will implement an identification and sign-in/sign-out procedure for authorized personnel including vendors, visitors and customers. The outside area of the manufacturing premises will be maintained to ensure visibility for security monitoring. Floracy will also establish procedures for the investigation of suspicious activities.

To prevent theft or loss of cannabis and cannabis products, Floracy will establish an inventory system to track cannabis material and the personnel responsible for processing it throughout the manufacturing process that is compatible i th the state's trak ad trae system, METRC. Personnel access will be

limited within the premises to those areas necessary to complete job duties, and to those time-frames specifically scheduled for completion of job duties. Tasks with high potential for diversion (including the loading ad u loading of a na is trasp ortation vehil es ill e supervised Flora 's ma agemet team.

Employees will be provided an area where they can store and access personal items.

Environmental Benefits

Floracy uses organic materials throughout its process, beginning with its cultivators who use organic materials and methods and grow outdoors. The plant material is processed using organic cane alcohol which is generally recognized as safe and effective by the American Food and Drug Administration. With the closed loop system Floracy will use, over 95% of the ethanol will be reclaimed and reused. The spent materials from the extraction process will be combined with coffee grounds and recycled as garden mulch.

Flora ill ho ose PG&E's altera tive for 100% renewa le energy soures. The manufacturing process uses modern equipment with high energy efficiency and the process uses no water.

We also plan a to implement a green program within the facility that includes recycling and power conservation to reduce our carbon footprint.

Community Benefits

Tax Revenue

Nevada City is in the process of establishing local sales tax structure for permitted cannabis businesses. Flora full supports the it 's ur ret ta plan proposal for a na is u sinesses. A two percent cannabis business tax levied on our net revenue would contribute approximately [redacted] to city coffers from Floracy over a five-year period.

Local Employment

All the founders of Floracy live in Nevada City, Grass Valley or Nevada County. We have a fundamental commitment to hiring locally. Because of the existing pool of cannabis expertise and other required skill sets , we expect no problems filling our open positions locally.

Charitable Donations

Floracy has established a track record over the past five years of giving generously and volunteering to local charitable organizations. It is our intent to continue this practice increasing our donations in line with profit growth.

Local commerce

[redacted]. There are many small local cannabis businesses that will not be [redacted]. Our bulk oil production capacity will enable licensed manufacturers to obtain the cannabis oil they need to combine with their other ingredients such as baking mixes, salves

and tinctures. A supply of oil to local producers will help build an overall licensed cannabis industry in Nevada City and contribute to the overall economy.

In addition, there will be major investment made to grow the Floracy brand of cannabis products. As Floracy grows its brand, not only will the city receive tax revenue, the community will benefit from the positive, healing image reflected on Floracy.

Labor and Employment

General Considerations

Our employees are instrumental to the success of the business and providing a healthy and satisfying environment is a high priority. Most of the jobs we create will be skilled. Our goal is to hire locally, and we believe we can accomplish this because of the talented cannabis labor pool in Nevada County.

Floracy will employ four people initially and grow that base as the business develops. In 2019 we expect to hire 2 to 4 additional employees.

- Floracy is an equal opportunity employer.
- Employees must be 21 years of age, California resident and a verifiable medical cannabis patient to work at Floracy.
- All employees are required to comply with the City of Nevada City Ordinance regulating Medical Cannabis Businesses, the regulations from Bureau of Cannabis Control and all applicable federal laws.
- Employment candidates residing in Nevada County will receive preferential treatment in line with Floracy's policy on supporting local businesses.
- Floracy will comply with all employment and labor laws.

Workplace Environment and Culture

Floracy will cultivate a positive, high energy and challenging work environment. We will encourage open communications and transparency in our business activities. In protecting a safe and healthy working environment where everyone feels secure and supported, Floracy prohibits violence of any kind. Any threats or acts of violence are not allowed. Acts of violence include but are not limited to threats, carrying and/or displaying any weapon, fighting or harassing. Any employee found threatening or participating in any violence toward themselves or another person will be disciplined and possibly terminated

Hiring and Background Checks

Floracy is dedicated to hiring competent, detail-oriented local residents that can comply with the strict regulations that govern cannabis businesses. When reviewing background check results, the hiring manager will verify that applicants have not been convicted of any crimes listed in Business and Professions Code section 19323.

Compensation

Flora' s hourly employees will earn, at a minimum, a wage o[redacted] Employees with specialized skill sets will star[redacted] Raises will be granted on an annual basis or when performance merits a raise, whichever is sooner. All employees will receive an annual performance review from their manager to assess their performance and development needs.

Floracy will retain a payroll service company to administer all payroll related activities including the withholding of taxes. Time cards will be collected on the 1st and the 15th of each month. Pay dates are the 10th and 26th of each month. Pay advances are available on an emergency basis if approved by the manager.

Employee Benefits

[redacted].

[redacted]

Employees of Floracy shall receive appropriate training for their intended duties to ensure understanding of rules and procedures related to the cannabis industry in compliance with state and local law. Floracy will conduct initial training for our staff to include general policies and procedures, as well as training on the laws and science of medical cannabis.
All employees will receive initial hire and ongoing training in Flora's products, policies and compliance practices. Initial hire training will include:

- Company Policies and Standard Operating Procedures
- Specialized safety and security training
- Certification and safety training for equipment operation and safety procedures
- Proper product handling & storage
- Proper sanitation

CONTINUING EDUCATION

Floracy will cover up to 50% of the cost of employees' continuing education that is relevant to Flora 's business a d approved y the e ployee's ma ager.

Employee Communications

Floracy will conduct weekly ma agers' meeting a d a monthly all-employee team meeting. These meetings are a time to receive updates on new policies, brainstorm on ways to improve the business operations and conduct team building exercises.

ANTI-DISCRIMINATION POLICY

Floracy is committed to providing a workplace where all individuals are treated with respect and professionalism. The policy of Floracy is to provide equal employment opportunities for all employees and applicants without consideration to race, ethnicity, religion, sex, age, national origin, marital status, physical or mental disability, as pertaining to the extent of the law. Consistent with this commitment is to give employees the right to work in an environment free from discrimination, harassment or retaliation based on the factors stated above as well as pregnancy, non-work affecting medical conditions, ancestry, political affiliations, sexual orientation, veteran status and gender identity. Floracy prohibits any form of discrimination; treating a person less favorably than others have been treated based on the previously stated characteristics protected by law.

SEXUAL HARASSMENT POLICY

Sexual harassment is a violation of the law and Floracy's anti-discrimination policy. Sexual harassment will not be tolerated by any employee in the workplace. Any conduct of a sexual nature including words and/or physical acts that interferes with an e ployee's work performa ce, or creates an intimidating, hostile, uncomfortable or offensive work environment is prohibited.
If any form of sexual harassment takes place within the workplace of Floracy then a manager needs to be notified as soon as possible, preferably within twenty-four hours.

DRUG FREE WORKPLACE

The use and presence of illegal drugs at Floracy is prohibited. Employees may not work when impaired by any drug that is prescribed or recommended by a doctor including medical cannabis. The distribution, possession, use or sale of controlled substances such as drugs or alcohol is strictly against the law and Flora' s drug free policy.
All employees are restricted from unlawfully distributing, dispensing, manufacturing, possessing and/or using controlled substances in the workplace.
Any employee convicted of violating a criminal drug law or policy within or outside of the workplace must notify the Manager within seven days of conviction. Floracy supports employee rehabilitation through education and/or counseling services. Rehabilitation may be given or made mandatory to those who violate any of the drug policies to continue employment at Floracy. Rehabilitation is not guaranteed as a stipulation of preserving employment.

SAFETY & SECURITY: STANDARDS AND EXPECTATIONS

Flora 's top priority is to provide a safe and healthy work environment. Supporting secure working conditions where positive communication, clear business practices and overall employee safety and wellness is important. We expect employees to be aware of any unsafe working conditions or circumstances that may interfere with the health and safety of others. It is a e ployee's responsibility to confront or report any situation that is in any way harmful or disruptive to the flow of business.

COLLECTIVE BARGAINING RIGHTS

Floracy will comply with the National Labor Relations Act and will not interfere with, restrain, or coerce employees in the exercise of rights relating to organizing, forming, joining or assisting a labor organization for collective bargaining purposes, or from working together to improve terms and conditions of employment, or refraining from any such activity.

Local Enterprise

Local Employment Strategy

Flora' s three founders reside in Ne ada City ad Grass Valle ad are the o mpa y's ma agers a d shareholders. We will seek out and hire our personnel needs form Nevada County. By hiring locally, we a lesse the e ironme tal impat of ommuting, diret ta re eu e bak ito Ne ada City's economy and cultivate community involvement.

Floracy intends to provide high CBD oil products to the newly approved dispensary in Nevada City, Elevation 2477.

Hiring locally is a major priority for Floracy. We intend to hire all employees from Nevada City and Nevada County, and we expect to find sufficient talent and experience from this local labor pool. We have already received expressions of interest from prospective employees.

Supporting Local Business

Floracy has already been consciously supporting our local businesses by buying supplies for our business and food and services in the nearby area. We have already used the services of or received bids from the following Nevada County businesses:

Sustainable Energy Group

TruSteel

Siteline Architects

David Franco, CPA

Melas Engineering

Josh Moore Construction

Gold Country Security

Plaza Tire

Bo's Discount Carpet

Walkers Office Supply

Hills Flat Lumber

House of Print & Copy

California Organics

SPD Markets

B&C Hardware

Promise to Procure Local Products

One of Flora y's core values is contribute to its local economy. Floracy will pledge to prioritize the purchasing of cannabis products from locally permitted businesses. As Nevada City, Nevada County and Grass Valley issue cannabis business permits, Floracy will give the local businesses preference when selecting its product vendors. This means more local jobs and added revenue for the City and the County.

At this time, Nevada City is the only local jurisdiction that has a cannabis ordinance allowing commercial activities. We expect this to change over the next few years.

Qualification of Principals

Harry Bennett, a resident of Nevada City for over 35 years, is a serial entrepreneur who has been providing medical cannabis products to dispensaries for the past 12 years. Floracy was founded 4 years ago and Harry has been providing cannabis products to dispensaries in Sacramento, Oakland, Berkeley and San Francisco. His reputation for knowledge and ethics in the cannabis industry creates positive awareness of the Floracy brand and adds credibility to the Floracy enterprise.

Patty Lawrence joined Floracy from the start, four years ago. Patty manages finished goods packaging a d leads the ompa y's produt development efforts. Patty has experience managing people. Her knowledge of the manufacturing processes i ll e instrue ntal in s aling up the o mpa y's e production equipment.

Phil Ritti has a degree in civil engineering and an MBA. Phil has deep general management experience, directing the functions of finance, engineering, manufacturing, marketing and sales. He ran successful business for large companies such as Symantec, Quantum and Ampex, and co-founded and served as CEO of a startup, Cache-A Corporation.

FLORACY™

Dec. 11, 2017

Hi Amy,

We appreciate the opportunity to provide additional details. I have copied your questions over to this document and our answers are interleaved below.

Please pro. ide information on the soft ae you plan on using that i ll e compatible ith the "tate's track and trace system

- We plan to use Viridian Sciences software designed specifically for cannabis seed-to-sale applications including manufacturing and distribution. Their software directly connects with the state's ta k a d ta e syste METRC. Vii dia is ey fa ilia i th California's compliance requirements. Viridian uses SAP as their software platform which is used extensively in Fortune 1000 companies throughout the world.
- I have included some literature on the product and its compatibility with METRC

Elaborate on the fire suppression system.

- Background:
  - The only area in the Floracy facility that needs an automatic fire suppression system is the Extraction Room which is marked Phase II on our Floorplan in the application. The most hazardous material we use in our processing is organic ethanol, 190 proof. Our ethanol extraction process will be a closed loop system which is much safer than an open-air system. The extraction room will be built with 2-hour firewall materials. The closed loop system is opened for recharging of ethanol and the loading of dry plant material prior to extraction. In those areas, Floracy will provide fume hoods with automatic fire suppression capabilities.
- Fire Suppression
  - The fire suppression system within the fume hood features detection tubing that that is designed to burst when it detects the radiant heat of a fire. When the tubing bursts, the drop in pressure opens a valve that triggers the release of a fire extinguishing agent through nozzles located in the hood. Placing the tubing in the path of a fire results in quick detection and suppression. We will use either ABC dry chemical fire extinguishment of carbon dioxide depending on the recommendations of our safety expert and the local fire chief.

Provide a security system floor plan.

- The floor plan with cameras identified is attached.
- We will refine this plan as a function of the work with are conducting with our security and safety consultants.

Indicate the image resolution of recorded surveillance footage and how long it will be backed up in event of a power outage.

- The section of California cannabis regulations that cover video surveillance is DPH-17-010E, Section 40205 and it specifies the following minimum requirements:
  - 1280 x 720 pixels minimum
  - 24 hours/day at min. 15 frames/second
  - All recordings kept for min. 90 days
  - Capable of supporting remote access
  - Installed in a manner that prevents obstruction, tampering, and disabling
  - Cover anywhere cannabis is weighed, packed, stored, quarantined, loaded, unloaded, prepared, or moved within the premises
    - Security rooms
    - Limited-access areas
    - Inside & outside building
  - Display time and date

  - There are many systems to choose from that ill eet the state's reu ie ets, e.g. iVideon, Honeywell, ADT, Samsung and others. We have not made our final determination of the type of system or brand we will purchase, but we can commit that our selection will meet all of the requirements listed above. We are currently assessing our options in conjunction with our security consultants including on-premise solutions, cloud solutions and hybrid solutions.

Provide an odor mitigation plan.

- There are three rooms that have the potential for odor:
  1. Extraction room
  2. Flower drying, dehumidification, milling room
  3. Packaging Room

- We will use activated carbon odor control systems in any area that has an odor content. Based on our experience in the cannabis industry, these carbon filters are very effective for odor mitigation.

Please describe the final form of packaging and your plan for tamper-evident packaging.

- In general, Floracy will comply with Section 40415 of the California Cannabis Licensing Regulations covering packaging.
  - We are actively working with Sungrown Packaging out of Oakland to design compliant packaging.
  - We will bring prototype packing to the Planning Commission Meeting

- Floracy branded products
  - The final form of our current Floracy branded products are individually packaged oral applicators. [redacted]
  - The tamper evident plans for our oral applicators include the following:
  - Tamper evident seals on each individual package

  - Individual Child Resistant packaging that can be re-used for products that have more than one serving.
- Bulk oil products will be sold to other licensed manufacturers in sturdy, air-tight, tamper-sealed metal containers.
  - These containers will not require child resistant packaging.

- All products will contain a unique identification number for track and trace and a batch number for lot control in the case of a product recall.

- We do o t pla to ma ufa tue podu cts that fall unde the state's definition of edibles.

Indicate what form both the incoming and outgoing product being supplied/processed in Phase I is in.

- Background
  - In Phase I, no new extraction will be performed.
    - We will be essentially living off inventory produced before the end of 2017 until e get the ity's approval fo Phase II.
  - Phase I does not involve the use of any hazardous materials or processes. The oil has already been processed through the extraction process
- Phase I Operations:
  - The first operation in Phase I will be the storage of raw material, work in process and finished goods inventory that has been produced prior to 1/1/18.
  - The second operation in Phase I will be to ship finished goods products to licensed retailers
  - The third operation in Phase I will be the packaging of the existing inventory of oil into individual packages of finished products.

- We will comply with the requirements for selling products during the state-defined transition period described in Subchapter 7, Section 40600 of the cannabis regulations.

Explain the difference between branded oil vs bulk oil?

- Branded oil is the Floracy product line and is the heart of the company.
  - Cultivation of specific strains is key to the Floracy brand model as well as stringent quality standards.
- Bulk oil is not individually packaged and will be sold to other licensed manufacturers who do not have primary extraction capabilities.
- Examples may include bakers, infusers and packagers.
- The bulk oil products carry no brand and are sometimes referred to as white label goods. These likely will allow greater flexibility of strains sources and other process options compared to Floracy brand products. This type of business can utilize our available manufacturing capacity while we build the volume of the Floracy brand.

Ela oat e on the "ge e p oga " you plan on implemeti ng.

- In our application we listed the following Environmental Benefits:
  - Use of organic materials throughout our processes
  - The PG&E option for 100% renewable energy sourcing

- Other components of our green program include:
  - Internal recycling program to minimize land waste
  - Internal goal to reduce paper consumption including
  - Printing on both sides
  - Re-use of paper
  - Electronic storage of records
  - Choosing energy efficient equipment in our manufacturing buildout
  - Installation of low water flow faucets and toilets
- We have also engaged a sustainability consulting firm, Sustridge to review our plans

Please elaborate on the Distribution component of your application.
Indicate security measures for receiving/ sending product?

1. What form of product will you be distributing (i.e. oil, flower, etc) and how will it be packaged?
2. Do you have access to a secure loading bay?
3. What volume of product do you anticipate distributing?
4. What type of vehicle(s) will be used for distribution?
5. What will the distribution routes look like and what type of facilities will be visited?

- Background
  - Because of the newness of the regulated cannabis industry in California and the uncertainty of finding a local, qualified, licensed distributor, Floracy plans to apply for a distribution license. We will take this step solely to ensure we are able to get our products delivered to licensed dispensaries. We do not plan to use the distribution license to develop a distribution business.
- Answers:
  1. We have engaged Gold Country Security as a consultant for our physical security plans. See attached document. [redacted]
  2. We will distribute only Floracy branded products and bulk oil. We do not plan to develop distribution as a separate business.
  3. The volume of products we will be distributing is the same volume planned in our business plan submitted with the application.
  4. The cannabis regulations do not specify the type of vehicle used for the transportation function within a distributor license. Vehicles must have a motor carrier permit pursuant to Chapter 2 of Division 14.85 of the Vehicle Code.
     - Essentially this means we need to register our vehicle(s) as commercial vehicles.
     - Other vehicle requirements listed in Section 5311 of the Cannabis regulations include:
       - Cannabis can not be visible from the outside

- Cannabis shall be locked in a box, container or cage that is secured to the inside of the vehicle
- When left unattended, vehicle shall be locked and secured
- A distributor shall not leave a vehicle containing cannabis in a residential area or parked overnight in a residential area
- Vehicle shall have a vehicle alarm system
- Packages or containers holding cannabis goods shall not be tampered with, or opened during transport
- A distributor transporting cannabis goods shall only travel between licensees shipping or receiving goods
- No person under the age of 21 shall be in a commercial vehicle
- Only a licensee or an employee of the distributor shall be in a vehicle while transporting cannabis goods

Can you confirm that you will not use hydrocarbon extraction practices in the manufacturing process?

- We can unequivocally confirm that we will not be using hydrocarbons in any part of our manufacturing process.
- We prefer the use of ethanol, an organic product, because we preserve more of the plant's medii nal ualities.
- For the purposes of cannabis regulations, the state has categorized ethanol as a non-volatile solvent and Floracy will apply for a Type 6 (non-volatile) manufacturing license from the state.
- We have fire codes that we need to meet, but ethanol is much less hazardous than hydrocarbons.

Please list all the products you will be manufacturing (oils, edibles, topicals, etc).

- Current:
  - Concentrated oil packaged in individual oral applicators
- Planned
  - [redacted]
  - [redacted]
  - [redacted]
- We do not plan to manufacture any edible products

Ca you po vide ma ufat ue's spe s fo ay spei alized equipmet you ill e using ad il ude the ma ufatue 's maintena ce shed ule?

- There are 2 pieces of specialized equipment we plan to use:
  - [redacted]
  - [redacted]

Provide a statement of commitment to the ma ufa tue's maintena ce shed ule for ay spei alized equipment.

- Floay ill adhe e to the ma ufatue s' maintena e sh edules fo al l spei alized equipment we operate.

FLORACY CANNABIS BUSINESS PLAN AMENDMENT PROPOSAL

Summary of Amendment Proposal

Floracy would like to amend its distribution cannabis business permit to remove the “self-distribution only” stipulation from our Nevada City cannabis business permit.

Background and New Plans

Floracy has a California Bureau of Cannabis Control type 11 distributor license. This license allows us to store and transport cannabis and cannabis products, to buy cannabis from and sell cannabis to other licensees, and to arrange for laboratory testing of cannabis and cannabis products.

We would like our Nevada City permit to allow us to conduct the same activities as our state distribution license allows. This would mean that we could distribute and conduct related activities for Floracy and for other licensees.

Floracy’s Nevada City self-distribution permit implies that we may conduct these activities for products which Floracy itself owns. This stipulation is unnecessarily limiting and makes certain transactions more complex.

To Agenda

Changes from Floracy's application to Nevada City

Scope of Application

Floracy seeks to amend the Distribution Permit so that it is not limited to self-distribution only.

All activities we will conduct were part of our original business plan, but logistically will be simplified if we are not required to take title of all cannabis that we transport, store, and test.

No Changes to These Categories of Our Cannabis Business Permit Application:

- Neighborhood Compatibility Plan
- Safety and Security Plan
- Environmental Benefits
- Labor and Employment
- Local Enterprise
- Parking
- Community Benefits

RECOMMEDED CONDITIONS OF APPROVAL
Floracy, Inc. 75 Bost Avenue, Suite 2

A. PLANNING DEPARTMENT

1. Provide proof of California State Licensing that verifies the license type issued.

2. Prior to commencing operations, you are required to complete all tenant improvements as detailed in your application. A medical cannabis business shall be subject to a mandatory building inspection, and must obtain all required permits and approvals which would otherwise be required for any business of the same size and intensity operating in that zone. This includes but is not limited to obtaining any required building permit(s), fire department approvals, Environmental Health Department approvals and other zoning and land use permit(s) and approvals.

3. Provide evidence of the right to occupy and to use the property for purposes of a medical cannabis manufacturing business. As a condition precedent to the City's issuance of a medical cannabis business permit pursuant to this Chapter, any person intending to open and to operate a medical cannabis business shall provide sufficient evidence of the legal right to occupy and to use the proposed location.

4. Execute an agreement, in a form approved by the city attorney, agreeing to indemnify, defend (at applicant's sole cost and expense), and hold the City of Nevada City, and its officers, officials, employees, representatives, and agents, harmless, from any and all claims, losses, damages, injuries, liabilities or losses which arise out of, or which are in any way related to, the City's issuance of the medical cannabis business permit, the City's decision to approve the operation of the medical cannabis business or activity, to process used by the City in making its decision, or the alleged violation of any federal, state or local laws by the medical cannabis business or any of its officers, employees or agents.

5. Provide proof of liability insurance and liability agreement. You are required to maintain insurance at coverage limits, and with conditions thereon determined necessary and appropriate from time to time by the city attorney.

6. Operation of your business shall be consistent with the submitted application material or as otherwise presented at the public meeting and as approved by the planning commission.

7. Off-street parking shall accommodate all employees, distribution vehicles, vendors, and visitors of the subject business. No on-street parking is permitted. Justification of the applicant's ability to accommodate the business with off street parking shall be included with annual renewals.

B. ENGINEERING DEPARTMENT

1 Unless authorized by separate waste discharge requirements, the Cannabis General Order, or a CWA section 404 permit, the following discharges are prohibited:

   a. Any waste that could affect the quality of the waters of the state.

b. Any wastewater discharge to City sewer that contains excessive nutrients (e.g., phosphate or nitrate), salinity constituents (e.g., sodium, chloride, potassium, calcium, sulfate, magnesium), constituents (e.g., iron, manganese, zinc, molybdenum, boron, and silver) or chemicals

C. FIRE DEPARTMENT

1. Maximum aggregate quantity of ethanol stored and used allowed is 120 gallons. This amount may be increased by 100% if stored in approved storage cabinets (CBC Table 307.1(1)).

2. Fire suppression system plans for the fume hood and exhaust system in the Extraction Room shall be submitted to the Fire Department for review prior to installation a licensed C-16 contractor or a California registered engineer (NFPA 91, 9.1).

3. Note that NFPA 1 is not recognized by the California Building or Fire Codes. However, it is recommended that NFPA 1 Chapter 38, Marijuana Growing, Processing or Extraction Facilities, *be* used to determine fire protection requirements not covered in the CFC.

4. The Extraction Room door shall swing in the direction of egress travel, shall be self-closing and shall have panic or fire-exit hardware (NFPA 1, 38.6.1.1.4).

5. A hazard rating diamond sign and no smoking sign shall be posted on the exterior of the Extraction Room door (NFPA 1, 38.6.1.4.2)

6. If air-moving systems supplying air in excess of 2000 cubic feet per minute to enclosed spaces within the building are installed, these systems shall be equipped with an automatic shut off.

7. Portable fire extinguishers shall be located as directed by the Nevada City Fire Department and installed in accordance with CFC Section 906 for Class B fire hazards.

8. Walls separating the adjacent tenants and within the facility shall be constructed to the required fire-safety rating per CBC Tables 508.4. It is stated in the proposal the Extraction Room will be built with a 2-hour fire rating.

D. COUNTY ENVIRONMENTAL HEALTH DEPARTMENT

1. The Nevada County Environmental Health Department does not have any opposition to the proposed applications. All hazardous materials stored, utilized and wastes generated as a result of the manufacturing operations will require permitting through the Environmental Health Department CUPA program per California Health and Safety Code. Retail sales of edible food product requirements will be determined upon the approval of the County of Nevada Cannabis Ordinance.

2. The manufacturing operation must adhere to existing California Department of Public Health - Manufactured Cannabis Safety Branch (MCSB) regulations governing the manufacture of cannabis-infused edibles for both medical and nonmedical use. The regulations released on November 16, 2017.

3. Any retail medical cannabis operation, in conjunction with the manufacturing operation, must be licensed with the Bureau of Cannabis Control.

4. The applicant andlor facility operator must adhere to all applicable codes and regulations regarding the storage of hazardous materials and the generation of hazardous wastes set forth in California Health and Safety Code Section 25500-25519 and 25100- 25258.2 including the electronic reporting requirement to the California Environmental Reporting System (CERS).

5. The applicant and/or facility operator must apply for and obtain a permit for the storage of hazardous materials and the generation of hazardous wastes from the Nevada County Department of Environmental Health (NCDEH), Certified Unified Program Agency (CUPA).

6. The applicant and/or facility operator shall secure and annually renew the permit for this facility within 30 days of becoming subject to applicable regulations. Routine compliance inspections, conducted by NCDEH inspectors, will occur at the facility and compliance inspections are typically unannounced inspections during regular business hours: Monday - Friday, 8:00am -5:00pm.

7. The County of Nevada Cannabis Ordinance, once codified, may require additional permitting, registration and reporting to the Environmental Health Department.

E. <u>POLICE DEPARTMENT</u>

1 A security reinforced wall shall be placed in front of the metal roll up door to cover the entire door area.

2 Vault plans shall be provided and reviewed prior to permit issuance.

3 Additional motion detectors shall be installed in the projected dead area between the roof and dropped ceiling area.

4 Security housing shall be installed around the ventilation system.

City of Nevada City

TO: Planning Commission

FROM: Amy Wolfson, City Planner

MEETING DATE: February 20, 2020

RE: AMENDED APPLICATION: Thrive Society, LLC - Medical Cannabis Manufacturing and Distribution Business, amended to add/remove principals and change the business name to R&R Goods, Inc

ATTACHMENTS:

1. Redacted Application with Amended Material Inserted
2. Previously authorized Conditions of Approval updated with name change

PROPOSED APPLICATION AMENDMENT: Thrive Society, LLC was previously approved under the management of Basil McMahon, Danielle Dao, and Ella Alpina. Their application was approved by the Planning Commission at their April 19, 2018 meeting for mechanical extraction manufacturing and distribution; Subsequently the Planning Commission approved an amendment on February 21, 2019 for small-scale ethanol extraction activity; The current amendment request is to change their business name to R&R Goods, Inc. and also to remove two principals (Dao and Alpina) and add two others to the management structure, Hezekiah Allen and Graham Burke. McMahon remains a principal under the new management structure. Allen previously passed a Live Scan background screening as he is a principal for an existing authorized Nevada City cannabis businesses. Burke has undergone a Live Scan background screening and no disqualifying information has been reported pursuant to Section 9.22.090 (M) of the City Municipal Code. Attached is the amendment request, noted as "Amendment 2," and attached to the previously authorized application and amendment.

Notification and an invitation to review and comment on the amended application was distributed on January 28, 2020 to the Fire Chief, the Police Chief, the City Attorney, the City Engineer, the City Manager, the Environmental Health Department, the Building Department, and to the Planning Commissioners. A redacted version of the application, with the inserted amendment material (the current amendment request is noted as "Amendment 2,") is attached to the staff report. The amended changes did not result in any changes to the conditions of approval as approved at the February 21, 2019 meeting, though they have been updated to reflect the business's name change.

Regulatory Consideration: Section 9.22.070 (B) of the City Municipal Code prohibits the transfer of ownership or control of a cannabis business or transfer any cannabis business permit issued under this Chapter. The Municipal Code does not provide parameters for circumstances that constitute a "transfer." Staff is working with Consulting Attorney Hodgson to develop policies and procedures from a legal perspective so that staff has a more defined process for directing applicants proposing these types of business changes in the future.

RECOMMENDED MOTIONS:

1) Make a Motion to find the project exempt pursuant to CEQA Guidelines Section 15301 (existing facilities) because the building is already existing and the proposed manufacturing and distribution use is consistent with the principal permitted uses allowed in the Light Industrial Zoning District pursuant

to Section 17.48.020, and there is no expansion of use beyond what is already considered a permitted use.

2) Make a Motion to approve the amended application as presented to authorize the name change and principal management structure change of Thrive Society, LLC, changing to R&R Goods, Inc, for a medical cannabis manufacturing and distribution operation at 138 New Mohawk, as previously authorized and as described in the amended application, subject to the previously approved Conditions of Approval, attached, making the findings a & b.

   a) As presented and conditioned, there is no reasonable argument that approval of the amended application is likely to be detrimental to the city, taking into account any health, safety, and welfare impacts on the community.

   b) Finding that the amended application is consistent with Chapter 9.22 of the Nevada City Municipal Code.

   OR

   Make a Motion to reject the amended application for a medical cannabis business permit to Thrive Society, LLC that the application is not consistent with Chapter 9.22 of the Nevada City Municipal Code.

   OR

   Make a Motion to continue the decision for authorization of a medical cannabis business permit to Thrive Society, LLC with direction to the applicant regarding any inadequacies of their amended application that must be addressed.

ORIGINAL

City of Nevada City

~~TSL-Mnv.C.p.D.f-1~~
RRG-Mnv.Cp.Df.-1

Staff Use

Fee:$_____

Date Paid:_____

Jump to Amendment 2

Planning Department
317 Broad Street, Nevada City CA 95959

Phone: 530-265-2496
Email: Amy.Wolfson@NevadaCityCA.gov

MEDICAL CANNABIS BUSINESS PERMIT APPLICATION FORM

(dispensary applicants, use other specific application form)

Please submit a minimum of **five (5) bound hard copies** and **one (1) digital copy** (usb drive or CD) of all application material.

Check business type being proposed. If multiple types are proposed, each type will need to be distinctly addressed in the supplemental documentation and on this form. A separate form may be submitted if it will help provide clarity.

X Manufacturing

___ Cultivation

___ Testing Laboratory

___ Testing

X Transportation (Distribution)

N/A Dispensary (use separate form)

Business Name: Thrive Society

Business Primary Contact: Lyle (Basil) McMahon

Contact Title: Vice President/ Treasurer

Contact's Mailing Address: 2036 Nevada City Hwy PMB 564
Grass Valley, CA 95949

Phone#: 541-602-8812 **E-mail:** Connect@Thrive-Society.com

24-Hour Contact Information: Lyle (Basil) McMahon 541-602-8812

For details about the information required as part of the application process, please see the Implementation Procedures to Operate a Medical Cannabis Business in Nevada City, Ordinance No. 2017-06 and additional requirements in order to complete the application process. All these documents can be found on the Nevada City webpage: www.NevadaCityCA.gov

Section A: Principal Background Information (Must be signed by all Principals)

ORIGINAL

(Add more pages as necessary to accommodate signatures of all Medical Cannabis Business Principals)

Under penalty of perjury, I acknowledge that I have personal knowledge of the information stated in this application and that the information contained herein is true. I also understand that the information provided in this application, except the Safety and Security Plan in Section C and certain confidential information such as driver's license and social security number, which can be redacted, may be public information and subject to disclosure under the California Public Records Act.

Principal Name: Lyle (Basil) McMahon

Principal Title: Vice President/ Treasurer

Principal Home or Cell Phone: 541-602-8812

Principal Home Address: [redacted]

Principal Signature: _____ Date: 2-12-18

Attachments:

X If business will operate as a collective/cooperative provide proof of status as a qualified patient or primary caregiver (State card or doctor recommendation)

____ Receipt from Live Scan check

X Picture of applicant (two passport quality photographs 2X2)

X Copy of Social Security Card

X Copy of Driver's License, OMV issued ID Card or Passport

X Proof of address (DMV-issued ID/driver's license, and/or recent utility bill under Principal's name)

Staff use only: Pass background check_____

****

Principal Name: Danielle Dao

Principal Title: President

Principal Home or Cell Phone: [redacted]

Principal Home Address: [redacted]

Principal Signature: _____ Date: 2-12-18

Attachments:

X If business will operate as a collective/cooperative provide proof of status as a qualified patient or primary caregiver (State card or doctor recommendation)

____ Receipt from Live Scan check

X Picture of applicant (two passport quality photographs 2X2)

X Copy of Social Security Card

X Copy of Driver's License, OMV issued ID Card or Passport

X Proof of address (DMV-issued ID/driver's license, and/or recent utility bill under Principal's name)

Staff use only: Pass background check_____

ORIGINAL

Section A: Principal Background Information (Must be signed by all Principals)

(Add more pages as necessary to accommodate signatures of all Medical Cannabis Business Principals.)

Under penalty of perjury, I acknowledge that I have personal knowledge of the information stated in this application and that the information contained herein is true. I also understand that the information provided in this application, except the Safety and Security Plan in Section C and certain confidential information such as driver's license and social security number, which can be redacted, may be public information and subject to disclosure under the California Public Records Act.

Principal Name: Ella Alpina

Principal Title: CMO/ Secretary

Principal Home or Cell Phone: [redacted]

Principal Home Address: [redacted]

Principal Signature: _____ Date: 2/12/18

Attachments:

X If business will operate as a collective/cooperative provide proof of status as a qualified patient or primary caregiver (State card or doctor recommendation)

___ Receipt from Live Scan check

X Picture of applicant (two passport quality photographs 2X2)

X Copy of Social Security Card

X Copy of Driver's License, OMV issued ID Card or Passport

X Proof of address (DMV-issued ID/driver's license, and/or recent utility bill under Principal's name)

Staff use only: Pass background check_____

****

Principal Name: _____

Principal Title: _____

Principal Home or Cell Phone: _____

Principal Home Address: _____

Principal Signature: _____ Date: _____

Attachments:

___ If business will operate as a collective/cooperative provide proof of status as a qualified patient or primary caregiver (State card or doctor recommendation)

___ Receipt from Live Scan check

___ Picture of applicant (two passport quality photographs 2X2)

___ Copy of Social Security Card

___ Copy of Driver's License, OMV issued ID Card or Passport

___ Proof of address (DMV-issued ID/driver's license, and/or recent utility bill under Principal's name)

Staff use only: Pass background check_____

To Agenda

ORIGINAL

REDACTION JUSTIFICATION INSERT

(To be inserted for every instance of redacted)

RRG-Mnv.Cp.Df.-4

Nevada City Medical Cannabis Business Name: Thrive Society

The following page(s): *TSL-M.nv.C.pOf-2- TSL-M.nv.C.pOf-3*

has (have) been redacted or withheld from public disclosure, as determined by

Basil McMahon, Vice-President, Thrive Society

<insert name, professional title, affiliation with applicant>

because the information contained therein is exempt from disclosure under the following Government Code provisions:

Mark with "X" where applicable	Government Code provision:	Examples of information that may be withheld pursuant to each government code section:
	Section 6254, subd. (c)	Personal, medical, or similar files, the disclosure of which would constitute an unwarranted invasion of privacy
	Section 6254, subd. (f)	Investigatory or security files compiled by a local agency for licensing purposes
	Section 6254, subd. (n)	Licensee's personal financial data
X	Section 6255, subd. (a)	Personal contact information (business contacts should not be redacted)
	Section 6254	General public interest exemption (provide explanation below)
	Other	(Provide explanation below)

Explanation for redaction:

******Please note that if objection is made for the redactions on a public document request, you may be called upon to more thoroughly justify the reason for redaction. Any costs incurred by the city attorney to determine whether items marked for redaction are in compliance with Government Code Sections 6254 and 6255 may be passed on to the applicant.******

Principal/Partner History:

ORIGINAL

1. List whether, the applicant(s) has other licenses and/or permits issued to and/or ~~revoked from~~ the applicant, in the three years prior to the year of the permit application, such other licenses and or permits relating to similar business activities as in the permit application. If yes, please list the type, current status, issuing/denying for each license/permit. (Please attach a separate document explanation if necessary)

RRG-Mnv Cp Df.-5

None.

2. List any and all partners who have been found guilty of a violent felony, a felony or misdemeanor involving fraud, deceit, embezzlement, or moral turpitude, or the illegal use, possession, transportation, distribution or similar activities related to controlled substances, as defined in the Federal Controlled Substance Act, with the exception of medical cannabis related offenses for which the conviction occurred after the passage of the Compassionate Use Act of 1996. (Please attach a separate document explanation if necessary)

None.

Section B: Business Organization Status

1. Describe the Medical Cannabis Business organizational status:

Our LLCs were registered with the Secretary of State on 2/5/18. The status of these LLCs is "Active." Document processing takes some time, and currently the site estimates a turn-around processing time of 19 days. We estimate registration documents will be made available online by 2/25/18, and will submit these supporting documents as soon as they are available. Screenshots of the Secretary of State webpage verifying our registration status are attached, see "Business Organization Status".

[x] Attach proof of status, such as articles of incorporation, by-laws, partnership agreements, and other documentation as may be appropriate or required by the City.

Section C: Medical Cannabis Business Description and Location

1. Statement of Purpose of Medical Cannabis Business (a separate sheet may be attached, labeled Section C.1):

See Section 1, Propopsed Location, included in this applcation.

Business Organizational Status

The following screenshots are taken from https://businesssearch.sos.ca.gov:

201803610667 THRIVE SOCIETY LLC

Registration Date:	02/05/2018
Jurisdiction:	CALIFORNIA
Entity Type:	DOMESTIC
Status:	ACTIVE
Agent for Service of Process:	DANIELLE DAO 2038 NEVADA CITY HWY PMB 564 GRASS VALLEY CA 95495
Entity Address:	2038 NEVADA CITY HWY PMB 564 GRASS VALLEY CA 95495
Entity Mailing Address:	2038 NEVADA CITY HWY PMB 564 GRASS VALLEY CA 95495
LLC Management	Managers

201803610672 THRIVE MIGRATION LLC

Registration Date:	02/05/2018
Jurisdiction:	CALIFORNIA
Entity Type:	DOMESTIC
Status:	ACTIVE
Agent for Service of Process:	DANIELLE DAO 2038 NEVADA CITY HWY PMB 564 GRASS VALLEY CA 95495
Entity Address:	2038 NEVADA CITY HWY PMB 564 GRASS VALLEY CA 95495
Entity Mailing Address:	2038 NEVADA CITY HWY PMB 564 GRASS VALLEY CA 95495
LLC Management	One Manager

201803610679 THRIVE LAB LLC

Registration Date:	02/05/2018
Jurisdiction:	CALIFORNIA
Entity Type:	DOMESTIC
Status:	ACTIVE
Agent for Service of Process:	DANIELLE DAO 2038 NEVADA CITY HWY PMB 564 GRASS VALLEY CA 95495
Entity Address:	2038 NEVADA CITY HWY PMB 564 GRASS VALLEY CA 95495
Entity Mailing Address:	2038 NEVADA CITY HWY PMB 564 GRASS VALLEY CA 95495
LLC Management	One Manager

For additional information, see *Section 2: Business Plan- Entity Structure*.

Registration and Articles of Organization will be submitted as soon as they are available.

2. Proposed Location of Business: _____

ORIGINAL

138 New Mohawk Rd.

3. Name and address of property owner: _____

Lance Amaral, Terra Alta Development

PO Box 1657 Nevada City, CA 95959

4. Name and address of school(s) and/or public park(s) closest to Proposed Location: _____

Twin Ridges Home Study Charter 111 New Mohawk Rd

Pioneer Park, 421 Nimrod St,

5. Have you received a Zoning Verification Letter? (Please check the appropriate response)
Yes x (If yes, include documentation with this section of the application) No_____

6. Description of neighborhood around the proposed location surrounding uses, nearby sensitive uses (such as schools, churches, parks, daycares, or residents), transit access to site, etc. A separate sheet may be attached and labeled Section C.6.

See Section 1, Proposed Location Statement,
and Section 3, Neighborhood Compatability Plan.

7. Site plan must be dimensioned and show the entire parcel including parking and additional structures [recommended scale of **1"= 20'**]. In addition, please attach elevations and photos of proposed location. If any exterior alterations are proposed for the existing building, also attach a *proposed* site plan that is accurate, dimensioned and to-scale for each potential location and include elevation details. The scale should accommodate an accurate site plan on a sheet of paper no larger than 11X17.

8. Floor Plans shall be attached and shall be accurate, dimensioned and to-scale [recommended scale of **1/4"= 1'**] for each potential location. If any interior alterations are proposed for the existing building, also attach *proposed* floor plans. The scale should accommodate an accurate floor plan on a sheet of paper no larger than 11X17.

9. Signage Plan.

10. Vicinity Map.

11. Photos of the site and building(s).

Section D: Required supplemental information

ORIGINAL

This information is required for this application to be considered complete. Attach the following reports to the application.

- [x] **Business and Parking Plan**
- [x] **Neighborhood Compatibility Plan**
- [x] **Safety and Security Plan**
- [x] **Environmental Benefits (Water/Energy Efficiency Measures)**
- [x] **Community Benefits**
- [x] **Labor and Employment**
- [x] **Local Enterprise**
- [x] **Qualifications of Principals**

ORIGINAL

STAFF USE ONLY:

Date of initial application:_____

File Number assigned to application:

_____

Date fee received _____

Date application reviewed for completeness:

_____

☐ Complete ☐ Incomplete

Date Proof of ownership was verified or a signed and notarized statement from the property owner was received

_____

Date application reviewed by Planning Commission:_____

☐ Approved ☐ Denied

ORIGINAL

To Agenda

ORIGINAL

To Agenda

ORIGINAL

To Agenda

ORIGINAL

To Agenda

ORIGINAL

ORIGINAL

ORIGINAL

To Agenda

ORIGINAL

ORIGINAL

To Agenda

ORIGINAL

To Agenda

ORIGINAL

To Agenda

ORIGINAL

To Agenda

ORIGINAL

To Agenda

ORIGINAL

To Agenda

ORIGINAL

REDACTION JUSTIFICATION INSERT

(To be inserted for every instance of redaction)

RRG-Mnv.Cp.Df.-24

Nevada City Medical Cannabis Business Name: Thrive Society

The following page(s): *TSL-M.nv.C.pOf-9 - TSL-M.nv.C.pOf-22*

has (have) been redacted or withheld from public disclosure, as determined by

Basil McMahon, Vice-President, Thrive Society

<insert name, professional title, affiliation with applicant>

because the information contained therein is exempt from disclosure under the following Government Code provisions:

Mark with "X" where applicable	Government Code provision:	Examples of information that may be withheld pursuant to each government code section:
X	Section 6254, subd. (c)	Personal, medical, or similar files, the disclosure of which would constitute an unwarranted invasion of privacy
	Section 6254, subd. (f)	Investigatory or security files compiled by a local agency for licensing purposes
	Section 6254, subd. (n)	Licensee's personal financial data
	Section 6255, subd. (a)	Personal contact information (business contacts should not be redacted)
	Section 6254	General public interest exemption (provide explanation below)
	Other	(Provide explanation below)

Explanation for redaction:

******Please note that if objection is made for the redactions on a public document request, you may be called upon to more thoroughly justify the reason for redaction. Any costs incurred by the city attorney to determine whether items marked for redaction are in compliance with Government Code Sections 6254 and 6255 may be passed on to the applicant.******

ORIGINAL

THRIVE SOCIETY LLC

Elevating the Culture of Craft Cannabis

MCB Permit Application

February 2018

February 12th, 2018

L. Basil McMahon
Thrive Society LLC
138 New Mohawk Rd.
Nevada City CA 95949

Dear Ms. Wolfson and the Nevada City Planning Commission,

Included in this document you will find our completed MCB permit application and supporting documentation. Our application is organized to follow the sequence and structure of the "Implementation Procedures & Description of Evaluation Criteria" document published on the Nevada City *Medical Cannabis Businesses* webpage.

We thank you for your consideration, and if we have omitted any necessary information, we welcome any questions or requests for additional clarification. In areas where we are still actively developing our protocols and/or community engagement efforts, we have noted so, and will continue to keep the Commission apprised of our progress leading up to our hearing, when it is scheduled.

We understand that the granting of medical cannabis business permits is a new and lengthy process, and that a great deal of review is required of city staff. Without the necessary staff support, this can exact a cost.

It has become apparent, through the publication of the agenda for the upcoming Nevada CIty Council meeting scheduled Wednesday, Feb. 14th, that this cost is an active conversation within City Hall.

We support finding a solution to the multiple concerns expressed by Ms. Wolfson in her staff report dated February 14th. The permit fees assessed on MCB applicants should accurately account for the real costs of processing these applications. While it is true that we are very eager to have our application reviewed, It is not right that the City's staff must be overburdened, in order for us to be considered for the privilege of being granted an MCB permit.

It is an unfortunate situation to find ourselves in, to spend months diligently preparing our application, and submit right as City Council is entertaining a moratorium on the processing of pending MCB permits. We have attempted to be as complete in our application as possible, in order to reduce the amount of labor required by city staff to review our submission.

To Agenda

We absolutely understand the need to consider solutions to resolving the current application backlog and unsustainable work-load. We also appreciate the duty of city officials to ensure that all potential impacts of the presence of new regulated cannabis businesses are thoroughly considered before permitting. That said, If City Council decides to enact a 3-6 month moratorium on processing applications, it could cause us a significant financial challenge maintaining our application standing while we await resolution.

Please take into consideration that as tenants of the space we have leased at 138 New Mohawk, every month of waiting could cost us $10,000 in rent. The rental amounts paid monthly in the interim by our prospective MCB alone, if paid to the city rather than to our landlord, would be sufficient to hire a handsomely-paid full-time staffer or two. To have to be prepared to spend upwards of $60,000 to reserve our place in the queue of applicants, without generating revenue in the meantime, would simply be too costly for us to afford.

I, and my fellow principals of Thrive Society, would like to respectfully encourage City Hall to respond proactively to the concerns expressed by their staff, but to also take into consideration the financial hardship that a 3-6 month moratorium could have on our prospective business, and that of the other MCB applicants.

Lastly, we wish to reiterate our gratitude for the Nevada City Administration, for demonstrating leadership and being willing to navigate this new and complicated task of regulating well-meaning local cannabis businesses. We look to be a cooperative partner through this process. If hiring additional staff could help facilitate the processing of permits and help to resolve this matter to the satisfaction of City staff and Administrators, that is a cost that, as an applicant, we would be happy to support.

Regards,

L. Basil McMahon
For Danielle Dao and Ella Alpina
Thrive Society

Table of Contents

0. Executive Summary **12**

1. Proposed Location Statement **17**

2. Business Plan **20**

Day to Day Operations for Distribution 33

Day to Day Operations For Manufacturing 42

Joint Operational Standards 62

Local and State Law Compliance 71

Track and Trace System 73

Timeline 74

Marketing Plan 78

Financial Projections 7

Parking Plan 81

3. Neighborhood Compatibility Plan **84**

4. Safety and Security **94**

Facility Security Plan (4A) 94

Operational Security Plan (4B) 105

Fire Prevention & Safety Plan (4C) 113

5. Community Benefits **121**

6. Enhanced Product Safety **124**

7. Environmental Benefits **137**

8. Labor and Employment Plan **140**

9. Local Enterprise **145**

10. Qualifications of Principals **146**

Appendix

Site Plans

Proof of Capitalization

Executive Summary

Our Mission

Thrive Society is on a mission to elevate the culture of craft cannabis. We hope to become a nexus in the California cannabis supply chain. We will source exceptional flower varietals from the region and manufacture/distribute artisan medicinal extracts and infused products for sale to dispensaries in the state. Our team will propagate the rich cultural heritage of craft cannabis in a booming industry where large players are entering and consolidation has begun. Amidst a historic opportunity to establish a foothold and capture early market share, Thrive Society is stepping up to meet growing consumer demand for authentic connection to the farmers and herbalists.

Our Team

Our founders, Danielle Dao, Basil McMahon and Ella Alpina, are industry mavens with extensive experience in operations and management. They are all Nevada County locals and homeowners who are passionate about the medicinal properties of the cannabis plant and wish to see a healthy regulated industry emerge. All three partners will be taking hands-on management roles. The team is also supported by advisors and partners who will empower Thrive Society to grow into a successful and sustainable business.

Our Business Model

Thrive Society seeks to obtain permits for Distribution and Manufacturing in Nevada City. We believe that by holding both licenses, we will be able to operate synergistically. With access to cannabis material and close relationships to retail, we will also be able to manufacture value-added goods, in turn providing a comprehensive offering of products to licensed retailers across the state.

Our primary customers are cannabis dispensaries and delivery services, with specific needs for cannabis strains and product variety. Customer needs and consumer trends change seasonally. Through data analysis and relationship-building, it is our goal to anticipate demand and provide products that cannabis consumers seek.

Thrive Society plans to distribute the following goods:

- *Self-branded, pre-packaged flower*
- *Standard pre-rolls and infused pre-rolls (with rosin/kief)*
- *In-house manufactured goods like concentrates, tinctures, topicals, edibles, etc*

- *3rd party products from highly respected brands in the industry that share our core values*

Entity Structure

Thrive Society, LLC is the parent company of two wholly-owned subsidiaries, Thrive Migration LLC (Distribution) and Thrive Lab LLC (Manufacturing). The two entities (and their respective licenses) are held separately, to reduce cross-liability risk and provide increased flexibility in the future strategic direction of both operations. Currently, the owners and directors of the parent company retain full ownership and operational control of both subsidiary companies.

For the purposes of this application, when referring to Thrive Migration LLC ("Thrive Migration"), we will be speaking of the activities of our distribution division (the entity seeking a Type 11 Distribution License from the BCC); when referring to Thrive Lab LLC ("Thrive Lab"), we will be speaking of the activities of our Manufacturing division (the entity seeking a Type 6 Non-volatile Manufacturing License from the CDPH); and when referring to Thrive Society ("Thrive Society") we will be speaking of the activities of the company as a whole.

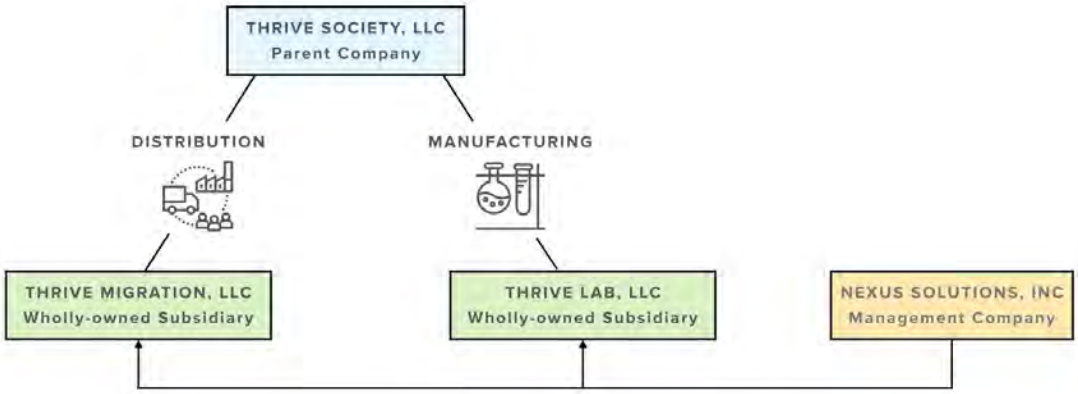

Management Services

In addition to the entities above, the founders have also established Cannexus Solutions Inc., which will act as a management company for the two licensed subsidiaries. Cannexus Solutions will provide management services like bookkeeping, marketing and advertising, and will hold the lease, equipment, intellectual property and brand assets for Thrive Society. Cannexus Solutions, Inc. will not be seeking state licenses for cannabis business, and will not be actively involved in "touching-the-plant"-type regulated

activities. Holding assets in an arms-length management company is a risk-mitigation measure advised by our legal counsel.

Summary

Our team is grateful for the opportunity to apply to operate a compliant, thriving small business close to home. We have positioned our prospective business to play a key partnership role in the regional industry and believe we can make a positive contribution to the community economy, while keeping our impact to the neighborhood a minimum.

We have worked diligently to develop comprehensive plans to ensure full compliance with state regulations. We have consulted with countless advisors and experts to develop protocol and standard operating procedures. Included you will find ten chapters, with a detailed overview of our proposed operations. If any additional information is requested by the Commission, we would be happy to provide it in a timely fashion.

Thank you sincerely for your time and consideration,

Basil McMahon, Danielle Dao and Ella Alpina

Thrive Society, LLC

1. PROPOSED LOCATION (C.6)

Proposed Location Statement

Thrive Society LLC seeks a Medical Cannabis Business Permit from the city of Nevada City to operate a legal, permitted medical cannabis distribution and manufacturing facility at: **138 New Mohawk Rd., Nevada City, CA 95959.**

Our proposed facility occupies approximately 4900 square feet of the 35,000 square-foot, multi-tenant building on a Light Industrial zoned parcel with a Planned Development combining district, LI- PD (APN: 05-280-18-00). The proposed facility is situated on the second floor, and on the east side of the building.

Subject property boundary *600-foot buffer area*

Lease Terms

Thrive Society has signed a commercial tenancy agreement for the proposed facility with Terra Alta Development, the legal owners of the property. The lease is for a 5 1/2-year term, ending December 31, 2023. A notarized letter from the landlord verifying the lease is included in this application.

Photography of the Proposed Location

Building Frontage, *showing the front entrance (left) and loading bay door (right).*

North side of Building, *showing the front entrance (center left) and accessible parking.*

North side of the Building, *showing good perimeter visibility.*

East side of the Building (far), *showing good visibility of facility windows, which will be secured.*

East side of the Building (near), *showing no obstructed view of facility windows, and no tree canopy encroaching upon the exterior wall of the building.*

Signage Plan

There will be no business signage visible from the street. In the front lobby entrance to the multi-tenant building, [redacted]

To Agenda

[redacted] oor signage materials will consist of adhesive decals, metal plate, or wood. None of the following will be used in our building signage: neon or backlit illuminated signage; the words “cannabis”, “marijuana”, “distribution” or “manufacturing”; and no iconography will be used that is popularly associated with medical cannabis, such as a pot leaf or green cross.

Description of the Vicinity

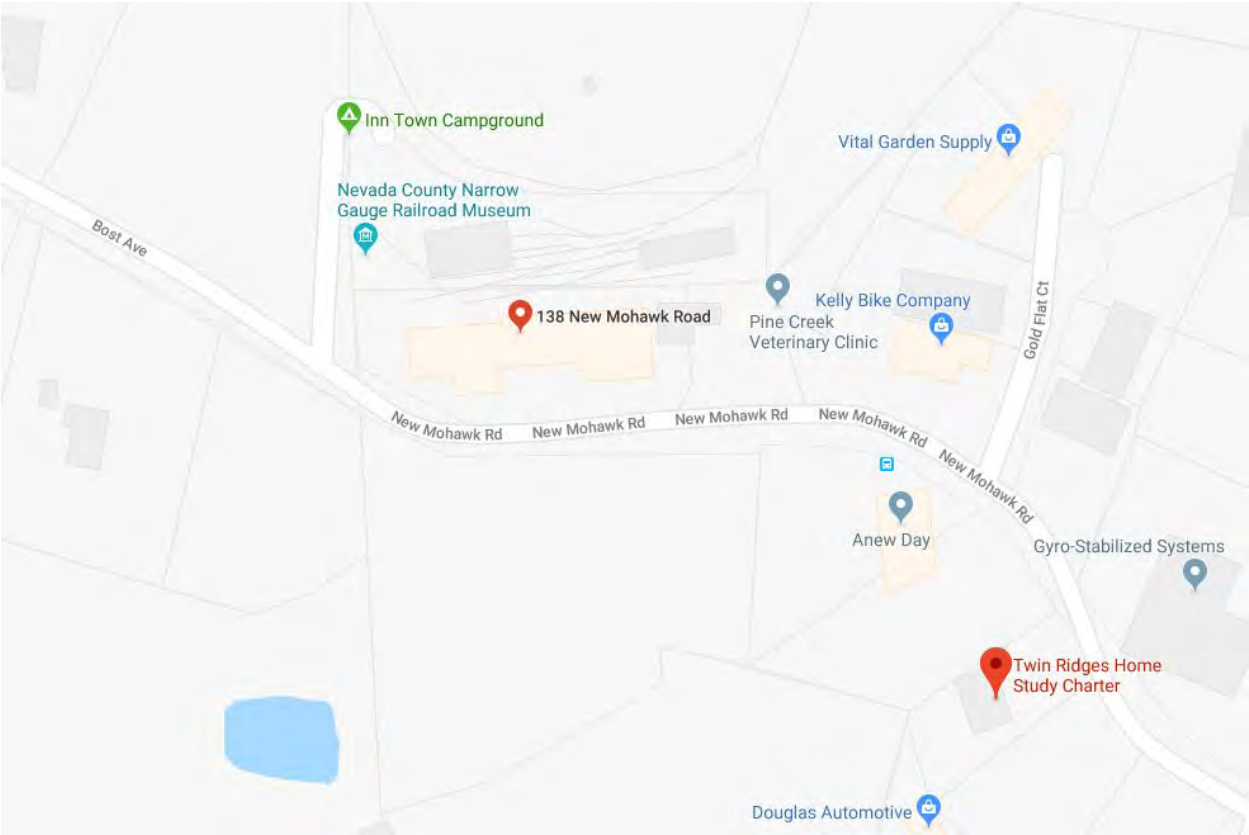

There are but a few businesses and organizations nearby 138 New Mohawk rd. To the north, there is the Nevada County Narrow Gauge Railroad Museum, and the Inn Town Campground. To the immediate west, there are a couple of vacant lots, and beyond that a few residences and small businesses. To the south is located the building’s ample parking lot, with good visibility and lighting. The parking lot is bordered with a brush thicket that lines Pine Creek. There are no businesses or residences immediately across the street, or visible from either the front door or the loading bay door, benefiting the discretion of our operations.

To the immediate east, there is the Pine Creek Veterinary Clinic, and beyond that, there is Kelly Bike Company, and Anew Day (a religious-affiliated counselling organization). In the same building as Anew Day, there is John Muir Charter School (conservation corps). Out front from Anew Day, approximately 320 feet to the east of our proposed facility, is a public bus stop. As noted in our Zoning Verification Letter, our proposed location is approximately 490 feet from a home study program- the Twin Ridges Home Study Charter, to the east, further down New Mohawk as the road bends.

The proposed location is in close proximity- 0.3 miles- to the Highway 49 Gold Flat Rd. on-ramp, making transportation vehicle access efficient and minimizing the impact on vehicles in the neighborhood. It is also only 4 minutes driving distance from the Nevada City Police Station via the same on-ramp, facilitating rapid response and interception.

For more information regarding our commitment to being an exemplary neighbor, please see *Section 3: Neighborhood Compatibility Plan,* and the Cover Letter provided with this application.

Suitability

The proposed location is excellently suited to host the business activities of a licensed medical cannabis distribution and manufacturing facility. [redacted] The building is free-standing, with good visibility on every side of the building's perimeter. On the east and north sides of the building, there are dispersed a variety of trees and shrubs, but they have been maintained, and do not encroach very much upon the exterior of the building.

The building frontage is close to and visible from New Mohawk Rd., making patrols and access easier for law enforcement and other security personnel. [redacted]

For the Site Map & proposed Site Plan, please see *Appendix*.

ORIGINAL

REDACTION JUSTIFICATION INSERT

(To be inserted for every instance of redaction)

RRG-Mnv.Cp.Df.-37

Nevada City Medical Cannabis Business Name: Thrive Society

The following page(s): *TSL-M.nv.C.pOf-32 - TSL-M.nv.C.pOf-34*

has (have) been redacted or withheld from public disclosure, as determined by

Basil McMahon, Vice-President, Thrive Society

<insert name, professional title, affiliation with applicant>

because the information contained therein is exempt from disclosure under the following Government Code provisions:

Mark with "X" where applicable	Government Code provision:	Examples of information that may be withheld pursuant to each government code section:
	Section 6254, subd. (c)	Personal, medical, or similar files, the disclosure of which would constitute an unwarranted invasion of privacy
X	Section 6254, subd. (f)	Investigatory or security files compiled by a local agency for licensing purposes
	Section 6254, subd. (n)	Licensee's personal financial data
	Section 6255, subd. (a)	Personal contact information (business contacts should not be redacted)
	Section 6254	General public interest exemption (provide explanation below)
	Other	(Provide explanation below)

Explanation for redaction:

******Please note that if objection is made for the redactions on a public document request, you may be called upon to more thoroughly justify the reason for redaction. Any costs incurred by the city attorney to determine whether items marked for redaction are in compliance with Government Code Sections 6254 and 6255 may be passed on to the applicant.******

City of Nevada City

January 30, 2018

Thrive Society, LLC
ATTN: Basil McMahon

Via email: **l.basil.mcmahon@gmail.com**

Subject: **Nevada City Medical Cannabis Business Zoning Verification Letter; 138 New Mohawk Drive**

Dear Mr. McMahon:

This letter shall serve as verification that property located at 138 New Mohawk Drive, Nevada City, CA meets local locational requirements in terms of zoning to operate a Medical Cannabis Manufacturing and Distribution business. Pursuant to our local ordinance, Chapter 9.22 of the City Municipal Code, the "Manufacturer" and "Distributor" business categories are defined as follows:

> *"Manufacturer" means a person that conducts the production, preparation, propagation, or compounding of manufactured medical cannabis, as defined in this section, or medical cannabis products either directly or indirectly or by extraction methods, or independently by means of chemical synthesis at a fixed location that packages or repackages medical cannabis or medical cannabis products or labels or relabels its container.*
>
> *"Distributor" means a person engaged in the business of purchasing medical cannabis from a licensed cultivator, or medical cannabis products from a license manufacturer, for sale to a licensed dispensary.*

The subject property, located at 138 New Mohawk Drive is located within the "Light Industrial" zoning district with a "Planned Development" combining district (LI-PD). While this zoning determination will suffice for local verification purposes, this Zoning Verification letter does not constitute verification of compliance with State locational requirements. Please note that a home study program is located at 111 New Mohawk Road, approximately 490-feet from the subject site.

City Hall · 317 Broad Street · Nevada City, California 95959 · (530) 265-2496

Subject property boundary *600-foot buffer area*

Issuance of a "Zoning Verification Letter" does not constitute written evidence of any kind of permission being given by the City of Nevada City, and it does not convey any right to operate a medical cannabis business in the City. Final decisions on the issuance of permits will be made by the Planning Commission following the approved application process.

Sincerely,

Amy Wolfson
City Planner
(530) 265-2496 x130

Terra Alta Development
P.O. Box 1657 Nevada City, CA 95959

City of Nevada City
317 Broad Street
Nevada City, CA 95959

December 21, 2017

Nevada City Planning Dept.;

I am the property owner of 138 New Mohawk Rd, Nevada City, CA 95959 (Assessor's Parcel Number – APN 37-060-87-000). I approve of CanNexus (the proposed tenant) use of the space for manufacturing and distribution of cannabis products under the Nevada City Medical Cannabis Business Permit and State guidelines.

Best Regards,

Lance Amaral
(530) 265-6162
lvamaral@yahoo.com
Terra Alta Development
P.O. Box 1657 Nevada City, CA 95959

2. Business Plan

Overview

Organized in the state of California on February 5, 2018, Thrive Society seeks to operate A Medical Cannabis Business in compliance with California State and local Nevada City laws, as a limited liability company. Our objective is to obtain a medical cannabis business permit pursuant to *Nevada City Ordinance 2017-10*, adopted by City Council on June 28, 2017 and *Section 26070.5* of the California *Senate Bill 94*, most commonly known as the *Medical and Adult Use Cannabis Regulation and Safety Act* ("MAUCRSA"). Subsequent to the issuance of our municipal permit, Thrive Society will seek a Type 11 Distribution license as defined in MAUCRSA and the *California Code of Regulations, Title 16 Division 42- Bureau of Cannabis Control*. In addition, Thrive Society will seek a second license, for Type 6 Non-Volatile Manufacturing, as defined in MAUCRSA and the *California Code of Regulations, Title 17 Division 1 Chapter 13, Manufactured Cannabis Safety.* The application period for the acquisition of these state licenses will be open-ended, beginning January 1, 2018.

Objective

Thrive Society seeks a license to operate a legal medical cannabis Distribution and Non-Volatile Manufacturing facility in Nevada City, CA. Our driving objective is to source medical cannabis flower & products from permitted suppliers, and manufacture in-house cannabis extracts and infused products, for distribution to licensed medical cannabis dispensaries throughout California. Operating in continuous compliance with state and local regulations, Thrive Society looks to utilize existing relationships to permitted cannabis businesses, to help regional independent permitted suppliers get their products onto shelves, and elevate the professional standard by which the medical cannabis industry operates in our community.

The core business functions to take place within our proposed licensed facility include:

Distribution: transportation, quality assurance, tax remittance, supply-chain management, packaging, labeling, inventory control, order fulfillment, and then distribution to licensed retailers.

Manufacturing: Extraction of cannabis biomass using mechanical (non-solvent, non-volatile) techniques, infusion, product development, packaging, labelling, inventory control, and then transfer to a licensed distributor.

Application Principals (Board of Managers)

- Danielle Dao : President
- Basil McMahon : Treasurer/ Vice President
- Ella Alpina: Secretary

Entity Structure

Thrive Society, LLC is the parent company of two wholly-owned subsidiaries, Thrive Migration, LLC (Distribution) and Thrive Lab, LLC (Manufacturing). The two entities (and their respective licenses) are held separately, to reduce cross-liability risk and provide increased flexibility in the future strategic direction of both operations. Currently, the owners and directors of the parent company retain full ownership and operational control of both subsidiary companies.

For the purposes of this application, when referring to Thrive Migration LLC ("Thrive Migration"), we will be speaking of the activities of our distribution division (the entity seeking a Type 11 Distribution License from the BCC); when referring to Thrive Lab LLC ("Thrive Lab"), we will be speaking of the activities of our Manufacturing division (the entity seeking a Type 6 Non-volatile Manufacturing License from the CDPH); and when referring to Thrive Society ("Thrive Society") we will be speaking of the activities of the company as a whole.

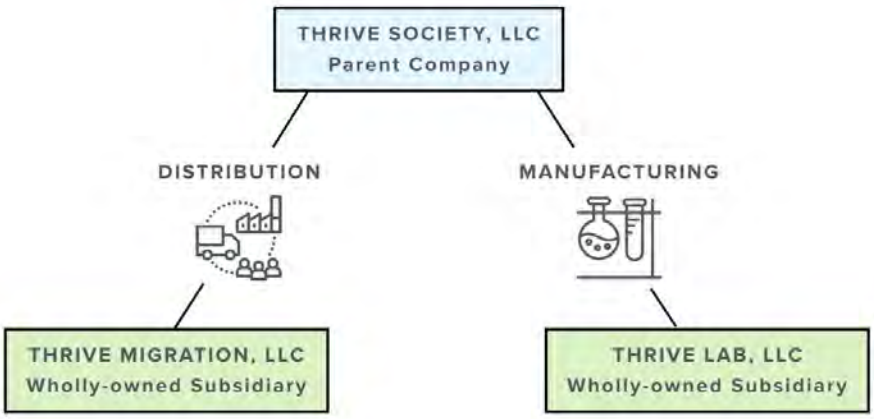

State Organized: California

State Filing Numbers:

Thrive Society (Parent Company): 201803610667

Thrive Migration LLC (Distribution): 201803610672

Thrive Lab LLC (Manufacturing): 201803610679

Entity Type: LLC

Federal Tax ID Numbers (EINs): *Provided upon request*

State License Type (seeking):

Type 11 = Distribution & Type 6: Manufacturing, Non-volatile Extraction

Objectives

Mission

Thrive Society will act as a nexus in the regulated medical cannabis supply chain. We aim to connect dots and facilitate the distribution of premium, locally-sourced cannabis flower and products to retail outlets throughout the California marketplace. In compliment, we will manufacture cannabis goods that honor and promote local, sustainable cannabis agriculture.

Thrive Society will engage permitted suppliers and retailers whose values align with ours. We will support the regional small-ag economy, promote sustainable agriculture, build good relations with community leaders, local government and law enforcement and drive demand in the marketplace for sustainably-produced, small-batch, artisanal cannabis.

Vision

We are driven to elevate the culture of craft cannabis. As big industry and consolidation sets in, we will work to carve a meaningful and long-lasting place for the communities that have mastered the art and science of cultivation and whose livelihood depends on it.

Our dream is that as the California cannabis industry matures, the heritage of craft cannabis culture that has thrived in our community for generations persists.

Legacy of Stewardship

For decades, Californians have pioneered sustainable agriculture. In the 60s-70s, the Back-to-the-Land movement brought an influx of agrarian idealists and down-to-earth young families to the Sierra Foothills region, seeking a closer connection to the earth and the means to feed their families from the bounty of a backyard garden. This generation established many successful independent businesses that still characterize the local economy today- enterprises that seek to find a balance between profits, people and the planet. One example is UNFI (Mountain People's Warehouse), the largest natural foods distributor in the Western US. A second examples, Peaceful Valley, est. 1976, started out as a small business selling organic garden supplies and now distributes across the country.

There is a legacy of stewardship in local agricultural startups here that carries through to the pioneers of today's craft cannabis producers. In small town communities across the region, the economic importance of the informal cannabis economy has become so substantial these days, that it's hard to ignore anymore. In this new era of regulatory oversight and increasing social acceptance, permitted cannabis business operators who aspire to comply with state and local law have an opportunity to carry on in the tradition of sustainable enterprise that our community has honored for generations.

Thrive Society is a homegrown company that seeks to follow in these footsteps. We believe that a well-regulated local cannabis industry can provide social good and bring resiliency to the Nevada City economy. Permitted distributors are a crucial part of the cannabis supply chain. Many of the problems that have arisen in the absence of effective regulations can now be curtailed and managed more easily when the distinction between regulated and non-regulated is set.

If granted permits to operate our facility and operations plan, we vow to maintain a professional, secure and discreet business that operates sustainably, generates local jobs and expands the tax base of Nevada City.

As an invested community partner, we will help mentor regional suppliers in compliance and sustainability and encourage good actors as they navigate finding their way in this new, welcoming era of fair and effective regulation. As longtime residents of Nevada County, our team has a sincere commitment to support the well-being of our community.

Management Team

Board of Managers

Thrive Society's Board of Managers comes prepared to navigate the dynamic challenges of the regulated marketplace, and fulfill important role in the regulated medical cannabis supply chain. Drawing from years of experience in the medical cannabis industry, We aspire to demonstrate leadership in the region and will position our organization to encourage compliance and best practices from our supplier partners. Leveraging existing key strategic relationships will enable us to remain agile and compliant as the market matures.

Our Board of Managers will supervise operational development, execute business strategy, oversee the implementation of the business plan and bring a level of professionalism to the daily operations of both the distribution and manufacturing aspects of our business.

President *Danielle Dao*

Ms. Dao brings 16 years of operations, management, and distribution experience in the cannabis industry. Her background expands across indoor, outdoor, and greenhouse cultivation, with 14 years of sustainable design, consulting, planning, and implementation with best management practices in farming.

Treasurer/Vice President- *Lyle (Basil) McMahon*

Mr. McMahon is a small business owner and cannabis policy advocate based in Grass Valley for the last 7 years. He is a founding board member of the California Growers Association (CGA), an industry trade group that has been instrumental in the development of cannabis regulations in California.

Secretary/CMO: *Ella Alpina*

Ms. Alpina is an established sales and marketing professional and entrepreneur. She is Founder and Creative Director of 7 Rays, a branding and marketing agency serving the cannabis industry, and is Co-chair of the Women Grow- Gold Country chapter.

For More info on Thrive Society's principals, see *Section 10, Qualification of Principals.*

Advisors

Legal - *Harris Bricken*

Since 2010, Harris Bricken's cannabis law practice has advised cannabis startups on compliance, licensing, corporate formation, investment agreements, real estate, employment law, tax policy, mergers, acquisitions, and banking issues. Firm partner Hilary Bricken has won widespread industry recognition for her work representing emerging businesses in state-regulated cannabis markets.

CPA Advisor- Sonia Luna

Sonia is the founder and President at Aviva Spectrum. She has more than 18 years of compliance, internal and external audit experience. She was recently appointed by then-SEC Chair Mary Jo White to the Advisory Committee on Smaller & Emerging Growth Companies in Oct. 2014. She has a firm grasp of cannabis-industry accounting matters and well-versed in regulatory policy.

CFO Advisor- *Dan Shapiro*

After earning his CPA in New York, Dan dedicated his early career to education, building eight schools across two continents. He is also a recurring guest lecturer at Harvard Graduate School of Education.

Industry Advisor- *Lauren Fraser*

Lauren Fraser is the Director for the Cannabis Distribution Association, which was co-founded in June 2016 and today has over 120 members across California. In 2015, she co-founded RVR Distribution which became the first and largest permitted cannabis distributor in the State. Now, she supports all operators seeking distribution licenses and partnerships through her work with the Association and as an independent consultant. Prior to working in the cannabis industry, Lauren worked in venture financing across various industries. Lauren holds a Degree in Finance and MBA, both from San Diego State.

Partnerships & Resources

Marketing Partner- *7 Rays Marketing*

7 Rays Marketing is a leading branding and marketing firm serving the cannabis industry. The agency has worked with many industry leaders like *Sweet ReLeaf, Lola Lola, Dark*

Heart Nursery, Treatibles and *Auntie Dolores*. They provide full service marketing and strategy to companies vying for market share. 7 Rays will provide support to Thrive Society with branding and packaging to start and full marketing activation as the efforts develop.

Lab Testing Partner- *Pure Analytics*

Located in Sonoma County, Pure Analytics has extensive experience supporting the needs of cultivators, manufacturers, dispensaries and small batch producers. As a pioneering lab, Pure Analytics has brought expert analysis and reliable results to Northern CA and the Bay Area for over 7 years. Pure Analytics is prepared to partner with Thrive Society to handle the testing demands of a distribution and manufacturing facility of our size.

Security Services- *Gold Country Security*

For the past 10 years Gold Country Security has been providing security patrol services to businesses in Nevada City, Grass Valley and throughout the county. Gold Country Security will be providing security services for our facility, and has reviewed and provided feedback on our proposed Facility & Operational Security Plans.

Controller- Complete Controller

Complete Controller an online bookkeeping & controller service, routinely monitoring our books and records to make sure they meet our exacting standards. They include bookkeeping services and can deliver a complete financial report package upon close of each quarter.

HR Agency- *Ms Mary Staffing*

Ms Mary Staffing is a professional employer organization (PEO) which will share the load of managing personnel responsibilities. Ms Mary Staffing will manage all the paperwork for employees, including dealing with various tax and insurance requirements, while Thrive Society will manage all the physical worksite requirements, including day-to-day management and workplace safety. This arrangement is particularly useful for the marijuana industry, because it allows PEO services to take care of payroll taxes, thereby avoiding the 10% penalty the IRS assesses to cash-only marijuana businesses.

Associations

Thrive Society benefits from membership and close ties with the following industry associations and organizations:

Cannabis Distribution Association
www.distributeca.org

California Growers Association
www.calgrowersassociation.org

Nevada County Cannabis Alliance
www.nccannabisalliance.org

Minority Cannabis Business Association
https://www.minoritycannabis.org

Day to Day Operations for Distribution

Operations Overview

Consistent with the regulatory framework outlined by the Bureau of Cannabis Control (BCC), Thrive Migration will procure legal medical cannabis products from licensed medical cannabis producers, ensuring the contents are safe for consumption and meet strict testing criteria established by the state.

Our day-to-day operations include:

- Verifying that legal medical cannabis products pass laboratory testing standards
- Verifying that legal medical cannabis products are packaged in compliance with regulations
- Remitting taxes as they are assessed
- Fulfilling insured, secure transportation of cannabis goods to and from legal medical cannabis retailers, other distributors, suppliers, and manufacturers throughout California

Thrive Migration will build the supply-chain infrastructure for safe, secure, and affordable distribution of legal medical cannabis, operate in continuous compliance with state and local regulations, and take proactive measures to mitigate impacts to community, and the environment.

Tax Remittance

Taxes assessed on medical cannabis dispensaries and cultivators are remitted to the California Department of Tax and Fee Administration. All sellers of medical cannabis are required to hold a seller's permit, report sales and pay taxes. Distributors are required to obtain a Cannabis Tax Certificate, and are the sole licensed entity to remit state taxes to the CDTFA on behalf of other licensed cannabis businesses. We will collect taxes when cannabis goods enter the commercial market. Taxes will be paid monthly in accordance with the tax schedule under existing law. The transportation of any cash payments will be held in our cash deposit vault and delivered via our transport vehicle accordingly.

Cultivation Tax

A cultivation tax of $9.25 per dry-weight ounce of cannabis flowers, $2.75 per dry-weight ounce of marijuana leaves. In our Distribution Division, Thrive Migration will serve to function as the remitter of cultivation tax amounts, before the cannabis or cannabis products ever reach a retailer. Cultivation tax amounts are due 30 days after the end of

the quarter in which the cannabis or cannabis products “enter the commercial marketplace”. The triggering event for this tax deadline is when cannabis goods complete and comply with quality assurance testing requirements set forth in regulations (i.e., when the cannabis goods pass lab testing).

Excise Tax

Cannabis will be subject to a 15% excise tax at point of sale to the consumer. Excise tax is assessed at the time of transaction from distributor to retailer, must be collected by the distributor from the retailer and remitted within 90 days. In an arms-length transaction (between a distributor and a retailer who do not share ownership affiliation), Excise tax amounts are due within 90 days whether the cannabis goods have sold already. The rate of excise tax on cannabis goods is based on “Average Market Price”, which is determined by the CDTFA quarterly.

Sales and Use Tax

As a distributor, Thrive Society is responsible for transporting cannabis and cannabis products between licensed cannabis businesses. When a distributor sells cannabis or cannabis products to a retailer, and the retailer provides a valid and timely resale certificate, the sale is not subject to sales tax. Regardless if all sales of cannabis goods are not subject to sales tax, it will be required to file a return and report all sales transactions to the CDTFA.

Nevada City MCB Tax

The City of Nevada City has proposed a municipal tax rate of 4% on Dispensaries and 2% on other Medical Cannabis Businesses. This proposed rate will need to be approved by the voters of Nevada City. We expect that this reasonable proposal will be approved in the upcoming election and we are anticipating a 2% tax rate assessed on the sales transactions of Medical Cannabis Distributors, such as our own.

Product Handling

Process Flow

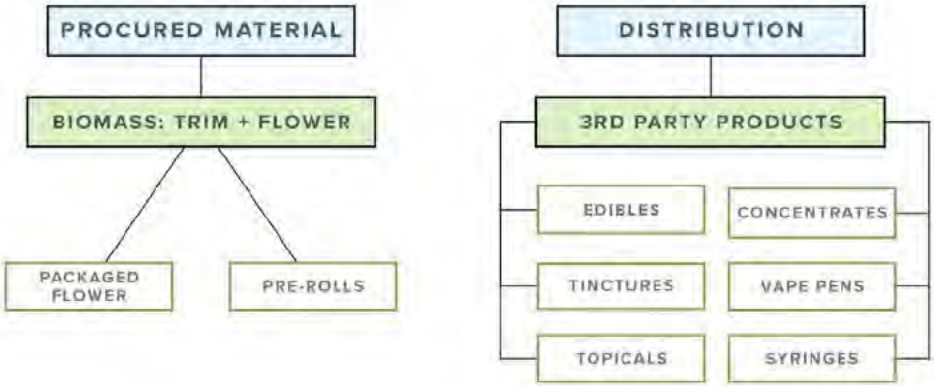

Product Storage

[redacted]

[redacted]

Product Intake

All incoming material, like bulk cannabis flower and manufactured cannabis products that are in their final packaging, will be segregated and labeled with the following information:

- Numbering of incoming product
- Batch number of product
- Quantity
- Identification of supplier through internal number system
- Origin of product identification: cultivator/farm/manufacturer

ORIGINAL

REDACTION JUSTIFICATION INSERT

(To be inserted for every instance of redaction)

RRG-Mnv.Cp.Df.-52

Nevada City Medical Cannabis Business Name: Thrive Society

The following page(s): *TSL-M.nv.C.pOf-48*

has (have) been redacted or withheld from public disclosure, as determined by

Basil McMahon, Vice-President, Thrive Society

<insert name, professional title, affiliation with applicant>

because the information contained therein is exempt from disclosure under the following Government Code provisions:

Mark with "X" where applicable	Government Code provision:	Examples of information that may be withheld pursuant to each government code section:
	Section 6254, subd. (c)	Personal, medical, or similar files, the disclosure of which would constitute an unwarranted invasion of privacy
X	Section 6254, subd. (f)	Investigatory or security files compiled by a local agency for licensing purposes
	Section 6254, subd. (n)	Licensee's personal financial data
	Section 6255, subd. (a)	Personal contact information (business contacts should not be redacted)
	Section 6254	General public interest exemption (provide explanation below)
	Other	(Provide explanation below)

Explanation for redaction:

******Please note that if objection is made for the redactions on a public document request, you may be called upon to more thoroughly justify the reason for redaction. Any costs incurred by the city attorney to determine whether items marked for redaction are in compliance with Government Code Sections 6254 and 6255 may be passed on to the applicant.******

- Strain or Product name
- Date of delivery, method and time
- Track and trace UID

If Thrive Society intakes a batch that it intends to sell to another distributor, the responsibility for lab testing and labeling would then be transferred to the final distributor.

State Mandated Quality Assurance Lab Testing

As per state regulations, after taking physical possession of a medical cannabis batch, Thrive Society will contact our licensed testing laboratory partner (Pure Analytics) to arrange for a laboratory agent to come select a random sample for laboratory testing.

For state-mandated quality assurance lab testing, the following protocols will be followed:

- Sample selection by the lab agent will be recorded by video camera. For harvest batches, we will ensure that samples be taken from batches that do not exceed 50 pounds. The sampling will occur with the batch number stated at the beginning of the video and a visible time and date indication on the video recording footage.
- After the sample has been selected, the laboratory agent and our operations manager will sign and date a document, attesting to the sample selection having occurred, as required by state regulations.
- A sample “passes” a laboratory test when the sample meets certain specifications required by the state, namely no pesticides, mold or bacterial contaminants are detected. Potency and cannabinoid analysis will also be recorded. Once product “passes” laboratory tests the tested batch will be labeled as such and enter into the packaging program when applicable.
- If a product fails to pass testing it will be labeled and quarantined. If the contamination is of the type that *can* be remediated, then arrangements with the supplier will be made to send the batch out to a manufacturer or processor for remediation. If the contamination is of the type that *cannot* be remediated, the batch will be destroyed and disposed of according to the protocols outlined in the section Cannabis Waste Disposal (Page 44)

Certificate of Analysis Verification

We will complete several quality assurance steps before distributing the batch for sale or transfer to another licensed business- checking that:

- The certificate of analysis corresponds to the batch tested
- The label is accurate

- The packaging meets required standards
- The proper information is in the state's track-and-trace database

Once the certificate of analysis is acquired for trim material, loose flower, edibles, tinctures and/or extracts, the Batch is then moved into the prepackaged holding room.

Product in Process

Once batch is ready to package, it is put into final consumer-facing, child-proof, tamper-evident packaging on our operating packaging floor. Then each individual container is scanned into track-and-trace and recorded accordingly to quantity of repackaged containers. Containers are then boxed up into opaque shipping boxes and labeled on the outside. Boxes are then stored in the secure storage room, awaiting export.

Distribution Equipment

Some of the equipment in use in our distribution facility includes:

Biomass Shredder/ Grinder

A shredder or grinder is used to prepare biomass for the production of pre-rolls. The 110 Cup stainless-steel shredder can process around 2 lbs of material in 3- 7 seconds depending on moisture levels. The grinder uses whips rather than blades so there is never any powder unless you desire it. The system is built in the USA. The Shredder will be installed in its own isolated room, to contain dust and particulate generated by its operation. This machine has a two year warranty and comes with product owner's manual to specify periodic maintenance.

Futurola Pre-roll Machine

The Futurola machine fills 100 Pre-Rolled cones in 2 minutes through vibration techniques and is ready to package straight from the machine. This tabletop stainless steel machine is known for its accuracy and ease for processors. This machines voltage input is 110-240 volt, with a 2.5Amp current and a 6 amp motor.

PacWrap Shrink tunnel

Packaged cannabis goods may need to be shrink-wrapped for tamper evidence and preservation. This tabletop shrink tunnel features Teflon coated rollers, a re-circulating air chamber, digital temperature control, AC variable speed drive conveyor, and automatic

cool down with shut off. This machine has a two year warranty and comes with product owner's manual to specify periodic maintenance.

Weston Herb Mixer

Thls herb mixer assists in herb blending. This mixer has a 44 lb. tub capacity to mix large quantities consistently. This stainless steel machine is maintenance free, with the exception of wiping with alcohol.

Labeling Machine

A Semi-auto Label Applicator machine will take self-adhesive roll labels from 8" to 12" in diameter on a 3" core. Practical minimum container width is about a half inch, with a practical maximum width of about 12 inches depending on the label orientation. For applying labels to flat and tapered containers. This machine is maintenance free.

Round Bottle Labeler

Semi automatic round container labeler is a table top device that can apply any type of label accurately and efficiently on cylindrical bottles.This machine is maintenance free**.**

PrimoCombi Hopper Weighing Filler

A Hopper/Filler is a sophisticated machine that automates high-volume filling of containers with a consistent weight of product. This versatile stainless steel automatic weigh filler is perfect for dispensing dry flower into containers and bags. It can fill up to 50 containers within a few minutes. This machine is custom built to suit our needs, and will require occasional maintenance or tooling.

This machine may be implemented in Phase II or III of the company, when volume of flower sales justifies the investment.

Equipment Maintenance

We commit to the manufacturer's maintenance schedule for all specialized equipment requiring maintenance in our facility.

Transportation

The Transportation section describes the methods that will be used to securely transport packaged or bulk medical cannabis products to and from other medical cannabis businesses. This includes permitted cultivators, manufacturers, retailers, and other distributors.

The distributor is the only licensed entity authorized by state regulations to conduct transport of cannabis or cannabis goods across the supply chain. Thrive Society will function as an intermediary, in between Suppliers (cultivators/ manufacturers) and Retail (dispensaries, delivery).

- [redacted]
- [redacted]
- [redacted]
- [redacted]
- [redacted]
- [redacted]
- [redacted]
- [redacted]
- [redacted]
- [redacted]

Partner Transportation-Only Distributors

On occasion, Thrive Migration will find it advantageous to call upon the transport services of a licensed Transportation-Only Distributor. Transport-Only Distribution licenses are a limited type distribution license, allowing for the secure transport of cannabis goods in-between premises of various license-holding businesses, but does not allow for the full scope of responsibilities and privileges of a Distribution license. There are a number of such Transport-Only Distributors, who specialize in the secure freight transport of cannabis goods.

[redacted]

Service Elevator

[redacted]

Product Complaints

Occasionally, product defects may occur. In the event of a complaint from a supplier (manufacturer, processor, cultivator or distributor) or a customer (a dispensary, delivery company or distributor) notifies Thrive Migration of a complaint, facility personnel will fill out the Product Complaint Form and submit to management for review.

Complaint Policy

If a product complaint is found to be valid, Thrive Migration will replace the defective product with a non-defective version of the same type of cannabis good, or exchange for a similar cannabis good of equal value, as allowed in state regulations.

ORIGINAL

REDACTION JUSTIFICATION INSERT

(To be inserted for every instance of redaction)

RRG-Mnv.Cp.Df.-58

Nevada City Medical Cannabis Business Name: Thrive Society

The following page(s): TSL-M.nv.C.p.D.f-52 - TSL-M.nv.C.p.D.f-53

<insert unique page identifier, or identifier range>

has (have) been redacted or withheld from public disclosure, as determined by

Basil McMahon, Vice-President, Thrive Society

<insert name, professional title, affiliation with applicant>

because the information contained therein is exempt from disclosure under the following Government Code provisions:

Mark with "X" where applicable	Government Code provision:	Examples of information that may be withheld pursuant to each government code section:
	Section 6254, subd. (c)	Personal, medical, or similar files, the disclosure of which would constitute an unwarranted invasion of privacy
X	Section 6254, subd. (f)	Investigatory or security files compiled by a local agency for licensing purposes
	Section 6254, subd. (n)	Licensee's personal financial data
	Section 6255, subd. (a)	Personal contact information (business contacts should not be redacted)
	Section 6254	General public interest exemption (provide explanation below)
	Other	(Provide explanation below)

Explanation for redaction:

******Please note that if objection is made for the redactions on a public document request, you may be called upon to more thoroughly justify the reason for redaction. Any costs incurred by the city attorney to determine whether items marked for redaction are in compliance with Government Code Sections 6254 and 6255 may be passed on to the applicant.******

Product Complaint Form

A Complaint Form will be developed that documents the name, contact information and license # of the customer submitting complaint, UID and description of the product, description of events, and photo documentation if available.

Complaint Response

Management will review the Complaint Form and determine the appropriate response. Response may include contacting the cultivator/manufacturer supplying the product, contacting dispensaries receiving the product, notifying public health authorities; and/or process for determining any other additional follow-up that may be needed.

Day to Day Operations For Manufacturing

Operations Overview

Consistent with the regulatory framework outlined by the Department of Public Health (DPH), Thrive Society will manufacture legal medical cannabis products using non-solvent, non-volatile extraction techniques; forumulate infused cannabis topicals, tinctures, concentrates, and a limited line of edibles.

Our day-to-day operations include:

- Procuring cannabis biomass and bulk extracts from permitted suppliers
- Holding cultivation tax amounts for transfer to a permitted distributor
- Extracting cannabis using mechanical extraction (kief, rosin) methods
- Infusing topicals, edibles, tinctures and pre-rolls with cannabis extract
- Packaging products and ensuring the contents are safe for consumption and meet strict testing criteria established by the state

Thrive Lab will build the supply-chain infrastructure for safe, secure, and affordable distribution of legal medical cannabis, operate in continuous compliance with state and local regulations, and take proactive measures to mitigate impacts to community, and the environment.

Tax Remittance

Cannabis Manufacturers must comply with regulatory requirements pertaining to tax. Effective January 1, 2018, a cultivation tax on all harvested-cannabis (including medicinal cannabis and adult-use cannabis) that enters the commercial market is imposed on cultivators at a rate of:

- $9.25 per dry-weight ounce of cannabis flowers,
- $2.75 per dry-weight ounce of cannabis leaves, and
- $1.29 per ounce of fresh cannabis plant.

Cultivation Tax Amounts

Cultivation tax amounts must follow the product through the chain of custody until the product reaches the hands of a distributor with a Cannabis Tax Certificate, who is able to remit the tax amounts to the CDTFA. As a cannabis manufacturer, we are required to collect the cannabis cultivation tax from cultivators when unprocessed cannabis is first

sold or transferred to our possession, if the tax amounts have not been first collected by the distributor at any intermediate point. Manufacturers must then take the cultivation tax amounts collected from the cultivator and transfer them to the distributor, who will then be responsible for quality assurance review and testing.

If the cannabis product is sold or transferred to one or more manufacturer, prior to being sold or transferred to the distributor who arranges for testing and performs the quality assurance review, the cultivation tax must be passed to the next manufacturer who takes possession of the cannabis product until the tax is remitted to the distributor.

When collecting the cultivation tax, we must provide an invoice, receipt, or other similar document to the cultivator that includes and identifies the following:

- Our name, as the licensee receiving the product.
- The cultivator from which the product originates, including the associated unique identifier.
- The amount of cannabis cultivation tax.
- The date of sale or transfer.

State Sales Tax

When we sell our product to a customer, such as a distributor or retailer, and the customer provides us with a valid and timely resale certificate, the sale is not subject to sales tax. It is important that we obtain timely valid resale certificates to validate that our wholesale transactions are exempt from sales tax. If no timely valid resale certificate is provided, it will be presumed that sales tax also applies to the sale and we must report and pay the sales tax to the CDTFA. Even if all our sales are not subject to sales tax and we collect the proper resale certificates, we are still required to file a return and report activities to the CDTFA. We simply indicate on the return that we made no taxable sales if this is the case.

Nevada City MCB Tax

The City of Nevada City has proposed a municipal tax rate of 4% on Dispensaries and 2% on other Medical Cannabis Businesses. This proposed rate will need to be approved by the voters of Nevada City. We expect that this reasonable proposal will be approved in the upcoming election and we are anticipating a 2% tax rate assessed on the sales transactions of Medical Cannabis Manufacturers, such as our own.

Facility

Stainless Steel Sink

The Thrive Lab manufacturing facility is equipped with a stainless steel 3 compartment commercial grade sink for washing and sanitizing tools, containers and instruments.

We will be installing a Faucet Eyewash Station at the sink to ensure ANSI Z358.1-2014 compliance.

Kitchen

California requirements for commercial kitchen facilities are related to safety of the building facility, safety of appliances, safety of food handling, and environmental regulations. The building in which our proposed kitchen is located conforms with local zoning requirements. The appliances and the plumbing system for a commercial kitchen will conform to the Uniform Mechanical Code, which is the international Standard for all mechanical devices, under the international Association of Plumbing and Mechanical Officials (ISPMO). These standards provide specifications for commercial kitchen appliances. We will apply and register for food-handling licenses with the California Department of Public Health, Food Certificates, Licenses, and Registration. As owners of a commercial kitchen, we have the responsibility to provide safe manufactured goods to the public. We have reviewed food safety protocol, provided by the U.S. Food Safety and Inspection Services. We expect and will comply with regular inspections from the California Department of Public Health.

Flow Hood Heat Exhaust System

For tabletop instruments in the kitchen which produce heat or steam (hot plates), our facility will be equipped with NFPA Certified NSF Listed Superior Stainless Steel Oven Heat hood for ventilation. We will also install Fire Suppression System inside the hood called Superior Hoods FIRESUPP-8. This system is for medium to high heat applications. Superior Hoods uses a highly effective liquid suppressing agent that fights fires three ways:

- Breaks the Chemical Reaction by interrupting the chemical chain that causes fires to spread intensify. It stops fire cold.
- Creates Steam and Cools, reducing damage and helps prevent re ignition.
- Smothers the fire when discharged, a chemical chain reaction produces a soapy foam.
- Oxygen is cut off The fire goes out. The thick layer of foam reduces the possibilities of re-ignition.

Products

Products that will be extracted and manufactured in our facility include:

- **Rosin Concentrates, of various viscosity and quality (**shatter, wax, crumble, budder, sugar, terp-sauce)
- **Kief**
- **Rosin and Kief infused prerolls**
- **Tinctures**
- **Topicals**
- **Capsules**
- **Edibles (Mints and Hard Candies, infused honey)**

Products which will be manufactured in our facility, although not extracted in-house, will include:

- **Vape Pen Cartridges**
- **Oil Syringes**

Equipment

Some of the equipment utilized in our manufacturing facility will include:

Dry-Sift (Kief) Extractor

The GreenBroz Alchemist 420 is a dry-sift, solvent-free trichome extractor designed to tumble cannabis trim and flower material and collect the accumulation of trichome pollen that is knocked-off the material in the process. The extractor rotates a vessel, tumbling the material like a clothes dryer, and pollen falls through the base, where it collects on a stainless steel plate and can be scooped up with a card or spatula for use or further processing.

The mechanical agitation is further facilitated by the introduction of pelletized dry ice into the extractor, lowering the temperature of the trim or flower material and causing the trichomes to become brittle and break off more easily. This reduces the amount of time needed for tumbling, and decreases the amount of undesirable leaf particulate that is extracted alongside the trichome pollen. This machine has a one year warranty and comes with product owner's manual to specify periodic maintenance.

Used for: Extracting Kief from cannabis trim and flower.

Ultra Quiet Air Compressor

California Air Tools produces a line of ultra quiet & oil-free air compressors designed to be some of the quietest 2.0 Hp air compressors in the industry, emitting only 58 decibels of sound. Only PSI: 10 – 140 are required for the Rosin press. This machine has a one year warranty and comes with product owner's manual to specify periodic maintenance for air filters.

Used for: Pneumatic air handling for operating the Rosin Press (see below).

Pikes Peak Rosin Press

Rosin refers to an extraction process that utilizes a combination of heat and pressure to extract resinous sap from Kief, trim or flower material. No solvents are required. A Rosin Press is a pneumatic press device that performs this mechanical extraction. It is similar technology to that of a t-shirt press, albeit a little more sophisticated.

The Pikes Peak model we have selected for commercial production Uses 8 tons of pressure (15,300 lbf @ 140 psi compressed air) output from our custom fabricated, oil-less, maintenance-free pneumatic cylinder. And includes even heat distribution from 0°F - 300°F from machined aluminum plates, each with its own thermo-coupler for accuracy. The input voltage is 120/240VAC and the frame and plates are A36 Steel. This machine is insured by the company's warranty and we commit to the manufacturer's maintenance schedule for this machine.

Used for: Press extraction of Rosin concentrate

Homogenizer

The Unidrive X1000D Homogenizer by CAT Scientific is a laboratory instrument used to blend a composite fluid to produce a solution, similar to a kitchen blender. It is typically affixed to a sturdy stand and the rotating head placed within a beaker or vial of fluid that requires blending. The rapid RPM of the drive shaft spins a mixing head at such a speed, and in a controlled manner, that it breaks down molecular bonds which otherwise resist homogenization. This machine has a one year warranty and comes with product owner's manual to specify periodic maintenance. Voltage is 230V/50 Hz or 110V/60 Hz and the motor power intake is 1050 Watts.

Used for: Blending tinctures, topicals and oils

Magnetic Hotplate Stirrer

The MCS78 Programmable Hotplate Magnetic Stirrer by CAT Scientific is a laboratory instrument for precision heating and blending of fluid mixtures, solutions and emulsions.

Its base is a precision hot plate, upon which sits a vessel that holds the fluid that should be mixed. Inside the vessel is a magnetic device which spins like a top, or propeller, stirring the fluid.This machine has a two year warranty and comes with product owner's manual to specify periodic maintenance. The power requirements are 120V, 50-60Hz 500W.

Used for: Decarboxylation, mixing, emulsification

Lab Hot Plate & Double Boiler

Thermo Scientific Cimarec Hot Plates are precision laboratory instruments for heating of fluid mixtures, solutions and emulsions.

A Double Boiler is a set of two fitted saucepans or pots that are stacked together with space between them. The bottom saucepan is filled with water, then the second saucepan is stacked on top. The steam from the bottom pot rises and heats the upper pot, buffering the surface temperature and providing for more control.

Used for: Topical mixtures, emulsification

Vaporizer Cartridge/ Capsule Filling Machine

The task of taking bulk oil formulations and filling vape pen cartridges or pill capsules by hand is tedious, time-consuming and requires exceeding levels of precision. An Automated Vaporizer Cartridge/ Capsule Filling Machine can rapidly fill a quantity of these small vessels with much greater accuracy and speed.

The Thompson Duke MCF1 is a Semi-Automatic, foot pedal operated Vaporizer Cartridge Filling Machine. The machine is a table-top device, in which a solution is fed through a syringe tip, intermittently filling one vessel with a precise quantity before moving on to the next vessel. In preparation for filling, each individual vessel (whether a cart or a capsule) is loaded into in an array mould (10 x 10 units, or 25 x 25 individual vessels, for example), and then filled one at a time. This machine has a two year warranty and comes with product owner's manual to specify periodic maintenance.

Used for: Filling vape pen cartridges, capsules

Labeling Machine

A semi-automatic label applicator machine will take self-adhesive roll labels from 8" to 12" in diameter on a 3" core and apply the label to a bottle surface with precision. Practical minimum container width is about a half inch, with a practical maximum width of about 12 inches depending on the label orientation. This machine is maintenance free.

Used for: labelling flat and tapered containers

Round Bottle Labeler

A semi-automatic round container labeler is a table top device that can apply any type of label to a cylindrical container accurately and efficiently. Similar practical maximum and minimum bottle sizes apply. This machine is maintenance free.

Used for: labelling round containers

Refrigerator

While we will not be producing any manufactured cannabis goods that require refrigeration, a refrigerator will nonetheless be a useful tool in the production of kief and rosin concentrates.

When extracting using the Dry-Sift Kief Extractor, it is beneficial to lower the temperature of the cannabis trim or flower input material, as explained above. Temporary storage of cannabis input material in a refrigerator, prior to kief extraction, can aid in the speed and efficacy of the extraction.

And for rosin, occasionally, the extract produced in the Rosin Press will stick to the parchment or stainless steel surface it is collected on. When rosin products are produced for concentrate form and aesthetic qualities need to be preserved, cooling the rosin concentrate can help to free the bond to the surface of the paper or metal, and reduce the amount of scraping or agitating necessary to manipulate the extract for collection or packaging.

Used for: Chilling trim or flower input material for Kief, ease of handling rosin concentrates

Equipment Qualification

Manufacturers guidelines and user manuals will be referenced in the development of written operating procedures to ensure that each piece of equipment and machinery is suitable, and in an acceptable state, for its intended use prior to operation. Included in these SOPs will be scheduled routine maintenance, contact information for the manufacturer, and all emergency plans for each process.

Equipment Cleaning and Maintenance

After completion of each manufacturing process outlined below, all machinery and equipment will be cleaned and sterilized to the standards of cleanliness set forth in our Operational Safety Plan.

We commit to keeping with the manufacturer's maintenance schedule for any specialized equipment requiring maintenance in our facility.

Processes

Process Flowchart

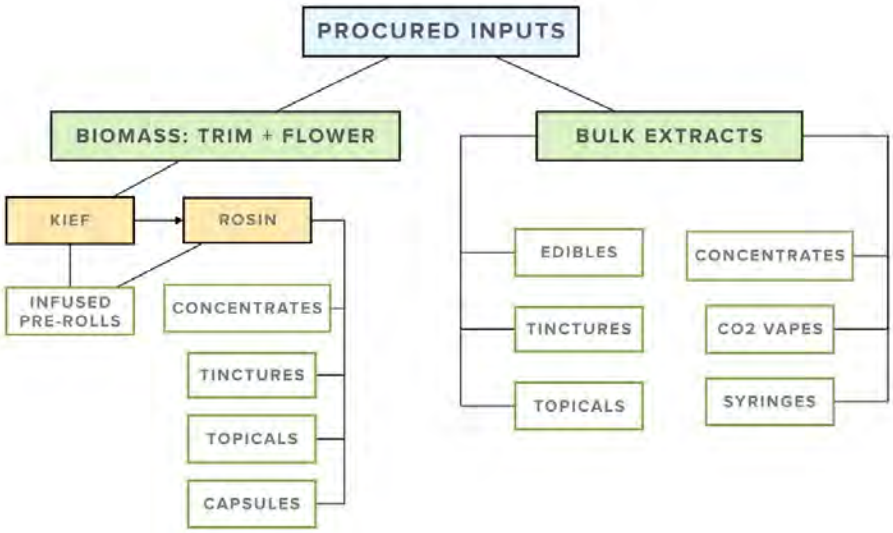

General Overview

Cannabis Biomass or Bulk Extracts will be ordered from a licensed cultivator, processor, manufacturer or distributor, and transported to the Thrive Lab facility by a licensed distributor (either Thrive Migration, or another distributor).

When the product arrives to the facility, it will be accompanied by a manifest and will be tagged with the appropriate track and trace UID and accompanying information, as well as a certificate of analysis for lab tests. We will check that the certificate of analysis corresponds to the batch tested, the label is accurate, the packaging meets required standards, and the proper information is recorded in the state's track-and-trace database.

Once the certificate of analysis is verified for material, loose flower, and/or raw extract input batches, the batches are then moved into the prepackaged holding area of the Manufacturing Storage Room. Once a batch is ready for extract or re-package, it is brought out to the processing floor for our operators to process accordingly.

If the product batch is destined to be extracted in the facility, it will be processed according to the protocols outlined in the corresponding Processes outlined for each

extraction method (listed below). Once the final product is manufactured according to these Processes, it will be assigned to packaging.

If the product batch is destined to be assigned directly to packaging, it will be handled in accordance with the criteria set forth in the section Product Packaging (Page)

Procurement of Input Materials

Thrive Lab will source Cannabis Biomass (trim and flower) material for in-house extraction from licensed cultivators in the region. Thrive Lab may also procure Bulk Extract materials from other licensed manufacturers, for further manufacturing, processing, assembly or packaging. These materials will typically be extracted oil (crude or distillate), but may also include: concentrates, topicals, edibles, tinctures, and any other unbranded bulk manufactured cannabis goods by licensed cannabis manufacturers.

In either situation, Thrive Lab will utilize the distribution services of Thrive Migration, or, on occasion, work with another partner Distributor to procure Cannabis Biomass or Bulk Extract materials for further manufacture, processing, packaging or assembly.

The transfer of title or custody of medical cannabis products is a track-and-trace reportable event, and every instance of transfer will be reported according to state guidelines, accompanied with a manifest and invoice- including transfer of products between Thrive Lab and Thrive Migration.

Cannabis Extraction Processes

Dry Sift Extraction Technique

Kief refers to the accumulation of the tiny, sticky, white crystals covering the cannabis flower, otherwise known as the resin glands/trichomes. They contain the largest amount of the active terpenes and cannabinoids. Kief is extracted using a Dry Sift Kief extractor. The extractor will be installed in its own well-ventilated room, to isolate incidental dust and airborne particulate generated in the extraction process. Dry ice is used in the process of extracting Kief with the Dry Sift Extractor (See “Hazard Analysis” Section for more information about handling protocols for Dry Ice). The process for Dry Sift Extraction is as follows:

- First, alcohol is used to clean the collection area of the chassis of a machine and the inside of the inspection cover to remove dust and any contaminants.
- Next, cannabis flower or trim material, which sometimes is pre-chilled by storing in a refrigerator ahead of time, is inserted into the sifter drum wearing rubber gloves so as to not contaminate the micron mesh of the sifter drum with skin oils.

- Using insulated gloves, dry ice is then inserted into the drum along with the cannabis flower or trim material, to assist in lowering the temperature of the input material and make brittle the trichomes, facilitating in their separation from the plant material.
- Re-install the sifter drum on the chassis, slide the inspection cover into place and turn on the tumbler.
- The time necessary for extraction depends on the amount and quality of the cannabis material being processed. One extraction can run from anywhere between 5 minutes to 1 hour.
- Most of the kief will collect at the bottom of the chassis. Using a fresh kief collector (similar to a credit card) wipe the sides of the inspection cover and sifter drum. Then, carefully remove the sifter drum and place it upright on a clean surface.
- Move the kief to storage in a transparent plastic or glass receptacle where it will be assigned a process UID and protected from airborne contaminants or exposure to excessive light or heat.

To clean the Dry Sift Kief Extractor:

- Use a BPA free plastic bag to cover the sifter drum and turn it upside down to expunge the spent and sifted material (this material can be used for a variety of purposes such as cooking, tinctures). You can then clean the sifter drum while wearing rubber gloves using either a soft-bristled paint brush or an air compressor.
- Spray the tumbler with a solution of 50% to 95% alcohol. The chassis and inspection cover should also be wiped with the alcohol solution. Once everything has dried, the tumbler can be reassembled.

Applications:

The extraction of kief will be done as a preliminary extraction technique, to accumulate Kief Material for the purposes of:

- Further processing into rosin
- For infusing into specialty pre-rolls.

Rosin Extraction Technique

Rosin is a solid form of resin that is obtained by adding pressure & heat to melt terpene sap off of the starting material (kief, trim or flower). Rosin extraction is extremely safe with absolutely no risks of explosion, ignition or serious bodily harm that are possible with flammable and/or pressurized solvents. Some consumers concerned with health issues are beginning to show a preference for concentrates made without potentially harmful solvents like butane and propane. Rosin is also significantly cheaper to produce compared to solvent-based extraction methods, often with comparable yields. Rosin is extracted using a Rosin Press in the following manner:

- The process we will typically use will involve a preliminary task of Dry Sift Extraction (outlined above), to produce Kief which, will in turn, be further extracted in the rosin press.
- Kief (or occasionally trim/flower material) will be placed inside a small mesh bag (36 or 72 micron bag for kief or hash, or 90 or 115 micron for trim or flower). The bag contains the input material, and helps to prevent particulate from being extracted along with the resin.
- A surface is prepared, typically a small piece of parchment paper or stainless steel plate, for collection of the rosin extract that is produced by each pressing.
- Temperature, duration, and pressure settings are calibrated on the Rosin Press.
- The heating plates should be protected from direct exposure to the extract with a layer of parchment paper.
- The bag of material is then placed in the press, and typically, the extract is heated to 280'F degrees and pressed, typically only a brief moment is required, until a rosin is squeezed out.
- The sheets are then covered stored in a protected local area, while cooling, to prevent debris and contaminants from settling onto the extracts. Once cooled, extracts will be kept in a marked receptacle.
- From this form the rosin can be made into a variety of concentrate forms (shatter, budder, honey, sauce) and infused products (tinctures, topicals, capsules, syringes, edibles).
- The raw extract is then placed into a labeled container, assigned a process UID and placed in storage until it is needed for rosin extraction, formulation, or infusion of pre-rolls.

To clean the Rosin Press Extractor:

- Typically the rosin press does not require regular cleaning as the equipment does not come into direct contact with cannabis material or extract. As long rosin is pressed within a layer of parchment paper, the heat plates will remain clean.
- Isopropyl alcohol and a towel can be used to wipe clean any fingerprints or dust on the machine, or if rosin does incidentally come into contact with the hot plates.

Applications:

The extraction of rosin will be done as a primary as well as preliminary extraction technique, to product rosin for the purposes of:

- Finished rosin concentrate (single)
- As a cannabis extract that will be used in the production of infused products.

Topical Emulsifying Technique

Topicals are cannabis-infused balm, salve, cream, lotion, or oils that are absorbed through the skin for the relief of pain, inflammation, skin conditions, and other ailments. Cannabinoids absorbed through the skin work by binding to a network of receptors called CB2. These CB2 receptors are found throughout the body and are activated either by the body's naturally-occurring endocannabinoid system, or by cannabis compounds known as phytocannabinoids (THC, CBD, etc). Ingredients, formulation and product viscosity can differ depending on the ingredients and end product, however, a typical manufacturing process involves the following:

- Preparation of the carrier oil and/or wax base (dispersed phase). Depending on the composition of the base ingredients, the application of heat may be required to melt, dissolve, or mix the base ingredients.
- Powdered ingredients, sometimes dry blended in advance, are dispersed into the oil/wax base.
- Hydration of aqueous solution (continuous phase): Emulsifiers, thickeners and stabilizers are dispersed into water in a separate vessel. Heating is required by a hot plate instrument to accelerate hydration.
- Forming the Emulsion: The two phases are blended using either a magnetic stirrer, or a homogenizer, to form the emulsion.
- Dispersion of the Active Ingredient: The active cannabis ingredient- typically rosin- is oil-soluble, and would be blended into the oil base using a double-boiler, magnetic stirrer, or homogenizer, before the aqueous phase is introduced. Extracts makes up only a small proportion of the formulation, and must be efficiently dispersed to maximise efficacy.
- Topicals are then bottled into sterilized containers and labeled with the required information and UID before being placed back in our storage vault for distribution.
- A cannabis product that is not an edible product and that is manufactured for the medicinal market shall not contain more than 2,000 mg of THC per package .
- Topical cannabis products shall only contain ingredients permitted for cosmetic manufacturing in accordance with Title 21, Code of Federal Regulations.

To clean the equipment used in the Topical Emulsifying Technique:

- Mixing equipment will be cleaned using isopropyl alcohol and a towel, and/or with a sponge and soapy water.

Applications:

The mixing/ emulsification of ingredients with cannabis extract will be performed to produce:

- Topical balms, salves, creams, lotions, or oils

Tincture Formulation Technique

A cannabis tincture is a solution of cannabis extract in either food-grade ethanol, or glycerin. Traditionally, ethanol would be used in a primary extraction (washing or soaking cannabis flower or leaf material for a period of time, then straining out the biomass)- but tinctures can also be made by introducing concentrated cannabis in oil.

- First we extract cannabis flower into rosin or we may use post rosin pressed flower to prevent waste
- We then soak the cannabis extract by putting it in a stainless steel container to soak in glycerite or oil or alcohol solvent. It will stay here until it reaches the desired potency.
- We then strain out the plant material with stainless steel screens and keep our concentrated weed liquid using our winged chemical and solvent vapor fume extractors for ventilation and safety
- We then can also evaporate out some of the alcohol to make it more potent according to your own preferences.
- Our cannabis waste is then disposed of in accordance with regulations.

To clean the equipment used in the Tincture Formulation Technique:

- Mixing equipment will be cleaned using isopropyl alcohol and a towel, and/or with a sponge and soapy water.

Applications:

The Tincture Formulation Technique will be performed to produce:

- Tinctures

Decarboxylation Technique

Decarboxylation is a chemical reaction that removes a carboxyl group and releases carbon dioxide (CO_2). THCA in cannabis begins to decarboxylate at approximately 220 degrees Fahrenheit after around 30-45 minutes of exposure. Full decarboxylation may require more time to occur. THCA has a number of known benefits when consumed, including having anti-inflammatory and neuroprotective qualities, but THCA is not psychoactive, and must be converted into THC through decarboxylation before psychoactive effects can be felt.

This is particularly important for preparing products for oral consumption that wouldn't otherwise be exposed to heat, like edibles and tinctures.

- Pre-extracted cannabis concentrate (either procured from a licensed manufacturer, or Kief/Rosin solution produced in-house) will be measured out and placed into a tempered glass vessel.
- The vessel of cannabis concentrate is placed on the magnetic hotplate stirrer and heated to 220 F for at least 30-45 mins, or longer, depending on the desired effect.
- When finished, the heated vessel of cannabis concentrate will be removed from the magnetic hot plate using protective gloves and placed aside to cool to room temperature, or placed in the refrigerator to accelerate cooling.
- The decarboxylated cannabis concentrate will then be placed in a marked storage vessel, assigned a process UID, and placed in storage until needed for further product formulation.

To clean the equipment used in the Decarboxylation Technique:

- Mixing equipment will be cleaned using isopropyl alcohol and a towel, and/or with a sponge and soapy water.

Applications:

The Cannabis Decarboxylation Technique will be performed as a secondary process to prepare cannabis concentrate for the production of:

- Tinctures, Capsules, Edibles, Oil Syringes

Hard Candy/ Mint Edibles Preparation Technique

Once decarboxylated, THC, along with other Cannabinoids, can be consumed orally. Hard Candy and Mints are some of the most popular and straightforward edible formulations, requiring a minimal number of raw ingredients to produce.

- The first step of production involves blending the ingredients together (sugar/ sugar alternatives, water, natural color and flavorings, and cannabis extract) in a stainless steel or tempered glass vessel, and placing it on top of a Magnetic Hotplate Stirrer.
- Precise amounts of cannabis and food ingredients are measured, to provide dosage consistency.
- The solution is heated sufficiently to facilitate the blending of ingredients, typically to 300°F (141.5°C).
- A hard candy or mint mould is used to contain the solution in a specific size and shape.
- The hard candy or mints are then poured into molds and are covered and shelved for solidification.

- When the mints are set and finished by the processes described above, they are carried to packaging machines to be wrapped, packaged, and labelled, then held in the Storage Room to await transfer to a distributor.
- Single-serving edibles may not exceed 10mg per serving.
- Packages of edibles may not exceed 100mg per package.

To clean the equipment used in the Hard Candy/ Mint Edibles Preparation Technique:

- Mixing equipment will be cleaned using isopropyl alcohol and a towel, and/or with a sponge and soapy water. Moulds will be washed, sanitized and rinsed in the facility sink.

Applications:

The Hard Candy/ Mint Edibles Preparation Technique will be performed as a final process to produce:

- Hard Candy, Mints

Honey Infusion Technique

Once decarboxylated, THC, along with other Cannabinoids, can be consumed orally. Infused Honey is a straightforward edible formulation, requiring a minimal number of raw ingredients to produce.

- The first step of production involves slightly heating the honey in a stainless steel or tempered glass vessel, and placing it on top of a Magnetic Hotplate Stirrer.
- Precise amounts of cannabis and food ingredients are measured, to ensure consistent dosage.
- The ingredients are mixed, jarred, sealed and held in our cooled storage vault

To clean the equipment used in the Honey Infusion Technique:

- Mixing equipment will be cleaned using isopropyl alcohol and a towel, and/or with a sponge and soapy water.
- ***Applications:***

The Honey Infusion Technique will be performed as a final process to produce:

- Infused Honey

Infused Pre-roll Assembly Technique

A standard pre-roll is a cannabis cigarette that is produced by rolling cannabis flower in a smoking paper and affixing a “crutch”, or filter tip, to one end. An infused pre-roll is the same, with the addition of kief and/or rosin concentrate applied to the surface or inside of the cigarette. The Infused Pre-roll Assembly Technique is as follows:

- The necessary ingredients to perform this technique are kief, rosin and pre-rolls. In advance of beginning this technique, standard Pre-rolls assembled in the Thrive Migration distribution facility will be procured, and a working quantity of kief and rosin will be produced.
- A quantity of rosin concentrate will be placed in a tempered glass dish, and placed on top of a Lab Hot Plate, then exposed to low heat, to increase rosin viscosity.
- A precision weighing instrument capable of measuring fractional gram increments will then be used to measure out a specific and minute quantity of rosin, typically.3g.
- Each increment will then be set aside on a sheet of parchment paper in a row.
- A quantity of kief concentrate will be similarly portioned out in .2g increments on a separate parchment paper sheet, in preparation for assembly.
- When the constituent parts are assembled for a batch, a single pre-roll will be selected from the batch, and one at a time, Rosin increments will be gently applied to the external surface of the pre-roll around the tip that gets consumed, taking care to cover a uniform surface of the pre-roll cylinder. Once rosin has been applied to a pre-roll, the pre-roll is set aside temporarily while the rest are applied.
- Once rosin increments have been applied to all pre-rolls in the batch, pre-measured increments of kief will then be applied to the pre-rolls, taking care to spread a uniform layer of kief over the pre-applied layer of rosin around the tip that gets consumed.
- Once kief and rosin have both been successfully applied to the external surface of the cylinder of the pre-roll, the pre-roll is set aside on a piece of parchment.
- Once kief and rosin have been applied to all pre-rolls in the batch, each single infused pre-roll will then be placed in individual tube packaging, assigned a UID, and placed in storage for transfer to a distributor.

To clean the equipment used in the Infused Pre-roll Assembly Technique:

- Assembly tools and working surfaces will be cleaned using isopropyl alcohol and a towel.

Applications:

The Infused Pre-roll Assembly Technique will be performed as a final process to produce:

- Infused Pre-rolls (single)

Procedures

Standard Operating Procedures

Thrive Lab will develop a comprehensive set of Standard Operating Procedures and make it a requisite that all facility personnel read, understand and follow all SOPs. Personnel will be trained in the use of SOPs and refresher trainings will be held at least once a year. SOPs will be kept accurate and revised whenever a change to any processes or improvement to a procedure is made.

Our facility technicians will follow SOPs closely, for each manufacturing process to be carried out, taking strict and observant records on every step of the process. This will ensure quality, consistency, and organization as well as create a trackable record for any cases of irregularity or contamination.

As per regulation, Thrive Lab SOPs will include, at a minimum, additional policies and procedures pertaining to security, emergency response, track-and-trace reporting and compliance, inventory control and reconciliation, and waste management.

Master Manufacturing Protocol

Thrive Lab LLC will establish and follow a written master manufacturing protocol for each unique formulation of cannabis product manufactured, and for each batch size, to ensure uniformity in finished batches and across all batches produced. It shall identify specifications for the points, steps, or stages in the manufacturing process where control is necessary to ensure the quality of the cannabis product and that the cannabis product is packaged and labeled as specified in the master manufacturing protocol.

Our master manufacturing protocols include:

- Specifications for each point, step, or stage in the manufacturing process where control is necessary to ensure the quality of the cannabis product and that the cannabis product is packaged and labeled as specified in the master manufacturing protocol.
- Procedures for product and/or batch sampling, and a cross reference to procedures for product testing and examination, and/or batch precautions to be followed.
- Written batch production record every time a batch of a cannabis product is manufactured.
- UID and, if used, the Batch or lot Number of the finished batch of cannabis product and the UIDs of all cannabis products used in the batch.
- Date and time of the maintenance, cleaning, and sanitizing of equipment.
- Results obtained during any monitoring operation.

- Results of any testing or examination performed during the batch production.
- Date and initials of person processing each step in the batch.
- Implementation of controls and procedures to ensure that each batch of manufactured cannabis product meets the specifications for random batch testing in every phase of manufacturing processes, as well as a detailed log recording the results.

Product Packaging

Prior to transferring any product to the possession of a distributor, Thrive Lab will ensure that the product is in finished state and is labeled and packaged in its final form for retail sale. All Manufactured cannabis will be packed in child-proof, tamper evident packaging. The Universal Symbol will be placed on the primary panel of all manufactured cannabis goods produced in the facility.

For more information about Packaging & Labelling, See *Section 6: Enhanced Product Safety.*

Product Labelling

All manufactured cannabis goods produced in the Thrive Lab facility will comply with the labelling requirements in Article 2, Section 40405-40408 of the Manufactured Cannabis Safety Regulations.

Additional information can be found in *Section 6: Enhanced Product Safety*.

Product Storage

[redacted]

Transfer to Distributor

[redacted]

ORIGINAL

REDACTION JUSTIFICATION INSERT
(To be inserted for every instance of redaction)

RRG-Mnv.Cp.Df.-78

Nevada City Medical Cannabis Business Name: Thrive Society

The following page(s): TSL-M.nv.C.p.D.f-72
<insert unique page identifier, or identifier range>

has (have) been redacted or withheld from public disclosure, as determined by

Basil McMahon, Vice-President, Thrive Society
<insert name, professional title, affiliation with applicant>

because the information contained therein is exempt from disclosure under the following Government Code provisions:

Mark with "X" where applicable	Government Code provision:	Examples of information that may be withheld pursuant to each government code section:
	Section 6254, subd. (c)	Personal, medical, or similar files, the disclosure of which would constitute an unwarranted invasion of privacy
X	Section 6254, subd. (f)	Investigatory or security files compiled by a local agency for licensing purposes
	Section 6254, subd. (n)	Licensee's personal financial data
	Section 6255, subd. (a)	Personal contact information (business contacts should not be redacted)
	Section 6254	General public interest exemption (provide explanation below)
	Other	(Provide explanation below)

Explanation for redaction:

******Please note that if objection is made for the redactions on a public document request, you may be called upon to more thoroughly justify the reason for redaction. Any costs incurred by the city attorney to determine whether items marked for redaction are in compliance with Government Code Sections 6254 and 6255 may be passed on to the applicant.******

Every individual package of manufactured cannabis will be assigned its own UID, and batches, or boxes of individual manufactured cannabis units, will be assigned a UID of their own. Before transferring title or custody to a distributor, Thrive Lab will work with the partner distributor (either Thrive Migration, or a 3rd party distributor) to produce a shipping manifest and purchase order/ invoice to accompany the product in transit, as well as any applicable Certificate of Analysis, and Cultivation Tax amounts due.

Hazard Analysis

Thrive Society will conduct and prepare a written hazard analysis to identify and evaluate known or reasonably foreseeable hazards for each type of cannabis product produced in our facility in order to determine whether there exists any hazards requiring a preventive control. Materials Safety Data Sheets (MSDS) for all hazardous materials will be developed and posted within the facility.

We have identified dry ice, 71% isopropyl alcohol, and food-grade ethanol as three hazardous materials that will be used in the production and cleaning processes of our facility. Proper MSDS and protocols will be developed and implemented for the handling of these items.

Dry Ice

Dry ice (frozen carbon dioxide) will be used in the Dry-Sift Kief extraction process. Dry ice that is stored in the facility will be kept in a secure, insulated container. The quantity of dry ice stored in the facility at any given time will not exceed the quantity needed for two days of continuous extraction in the Dry-Sift Kief extractor, or 50 pounds, whichever is lesser. When handling dry ice, protocols will require the wearing insulated gloves and protective eyewear.

71% Isopropyl Alcohol

Isopropyl alcohol will be used for the cleaning and sterilization of equipment, countertops, and exposed surfaces. The presence of water is a crucial factor in destroying or inhibiting the growth of pathogenic microorganisms with isopropyl alcohol. Water acts as a catalyst and plays a key role in denaturing the proteins of vegetative cell membranes. 70% IPA solutions penetrate the cell wall more completely which permeates the entire cell, coagulates all proteins, and therefore the microorganism dies. When cleaning with Isopropyl Alcohol, protocols will require the wearing of nitrile or latex gloves and protective eyewear. Air ventilation equipment will prevent the accumulation of hazardous Isopropyl Alcohol vapors during the regular course of work in the facility.

Food-Grade Ethanol

Food-Grade Ethanol (200 Proof Ethyl Alcohol) will be used in the production of cannabis tinctures. When producing tinctures with Food-Grade Ethanol, protocols will require the wearing of nitrile or latex gloves and protective eyewear. When opened, containers of ethanol can produce hazardous vapors. Open containers of ethanol will only be permitted during the active formulation, production or bottling of tincture products and in areas serviced by the Flow Hood Exhaust System, to prevent exposure to or accumulation of hazardous vapors.

Joint Operational Standards

The following sections outline protocols and procedures which are shared jointly between the **Thrive Migration** (distribution) and **Thrive Lab** (manufacturing) operations:

Hours of Operation

[redacted]

Safety and Security

The Safety and Security Plan in our application is comprised of three main sections, will describe in detail our standard operating procedures for each of the following:

A. **Facility Security Plan:** The purpose of the Facility Security Plan is to outline all the protocols and measures Thrive Society will implement to ensure that our distribution facility is secure and compliant with all state and local regulations governing security. The standards and procedures outlined here are designed to prevent incidents of theft, crime, or diversion of cannabis to the unregulated market, and to provide a safe working environment while protecting against diversion and access by minors.
B. **Operational Security Plan:** The purpose of the operational security plan is to ensure security and compliance in all aspects of business operations and activities, including personnel training, secure transportation, and procedures for security incident response.
C. **Fire Prevention & Safety Plan:** The purpose of the Fire Prevention & Safety Plan is to prevent a fire from occurring in or near the facility, and to proactively mitigate the risk of fire by employing safety procedures and protocols.

For more on Safety and Security, see *Section 4: Safety & Security*.

Record Keeping

Licensed cannabis distributors are required to retain records relating to commercial cannabis activity for at least seven years. Records will be kept in such a manner as to allow the Bureau of Cannabis Control and any other authorized enforcement agency the ability to request a hard copy or electronic copy of any and all records to be produced at

the licensed premises. The business records that Thrive Society will keep and maintain include, but are not limited to:

- **Financial Records:** sales receipts, bank statements, tax payments, and all related records required by the CDTFA.
- **Personnel Records:** employee records, contracts, SS, EIN/ taxpayer ID numbers.
- **Training Records:** The content of training resources, manuals, Standard Operating Procedures (SOPs) and records of who participated in which trainings, and when.
- **Contracts:** business agreements with other licensed medical cannabis businesses.
- **Permits & Licenses:** Records of the state and local authorizations obtained to operate a medical cannabis business.
- **Security Records**: Security camera footage, visitor and incident logs, and security training manuals
- **Inventory Control Records**: Transportation manifests, track-and-trace records, lab test results, records of cannabis disposal and recall events

Product Storage

[redacted]

[redacted]

[redacted]

Distribution Product Storage

[redacted]

[redacted]

[redacted]

Manufacturing Product Storage

[redacted]

[redacted]

Informational Lab Testing

Testing needs for informational and research & development purposes, for both manufacturing and distribution operations, will be routine and frequent. Thrive Society will prioritize business relationships with suppliers who can produce a verifiable Certificate of Analysis attesting to the compliance of the cannabis or cannabis products they offer for sale or transfer.

To assist in meeting the internal analysis and verification needs that our manufacturing and distribution facilities will face, Thrive Society is considering the purchase of an in-house testing device, for testing flower material potency and purity. The Sage Beacon, the G by 908 Devices, and the Lightlab by Orange Photonics are all devices on the market that may be suitable for this purpose. The test results of these in-house devices cannot be utilized for state-mandated quality assurance testing, but can be helpful for informational purposes.

In the interim, our laboratory partner, Pure Analytics, will be conducting informational testing on Thrive Society's behalf.

Cash Management And Accounting

Our primary Accounting System will have the capacity to integrate with METRC software, the California Track-and-Trace system (CCTT), which is a 'seed-to-sale' supply chain system for tracking and monitoring all commercial cannabis inventory and activity across the distribution chain allowing California to fulfill its statutory mandate per MAUCRSA. For more information, see the *“Track and Trace” Section* (Page 49)

We will also hire a 3rd party controller, such as Complete Controller, to keep a close eye on all of our record keeping and books. This will ensure we are audit ready, that all of our accounting is congruent with our books and records, and to assist in the creation of quarterly financial reports.

[redacted]

[redacted]

[redacted]

[redacted]

[redacted]

[redacted]

[redacted]

[redacted]

Workplace Accessibility

We intend to operate a business which meets state and federal requirements for workplace accessibility and occupational health and safety, and employment law.

Our building is equipped with an elevator and a ramp for ADA compliance. The building's bathroom facilities are wheelchair accessible. Our proposed site plan building improvements follow local building codes and meet or exceed the ADA Standards for Accessible Design for new construction and alterations. All of our online services are available via electronic information technology that is accessible to people with disabilities.

ORIGINAL

REDACTION JUSTIFICATION INSERT
(To be inserted for every instance of redaction)

RRG-Mnv.Cp.Df.-86

Nevada City Medical Cannabis Business Name: Thrive Society

The following page(s): TSL-M.nv.C.p.D.f-75 - TSL-M.nv.C.p.D.f-79
<insert unique page identifier, or identifier range>

has (have) been redacted or withheld from public disclosure, as determined by

Basil McMahon, Vice-President, Thrive Society
<insert name, professional title, affiliation with applicant>

because the information contained therein is exempt from disclosure under the following Government Code provisions:

Mark with "X" where applicable	Government Code provision:	Examples of information that may be withheld pursuant to each government code section:
	Section 6254, subd. (c)	Personal, medical, or similar files, the disclosure of which would constitute an unwarranted invasion of privacy
X	Section 6254, subd. (f)	Investigatory or security files compiled by a local agency for licensing purposes
	Section 6254, subd. (n)	Licensee's personal financial data
	Section 6255, subd. (a)	Personal contact information (business contacts should not be redacted)
	Section 6254	General public interest exemption (provide explanation below)
	Other	(Provide explanation below)

Explanation for redaction:

******Please note that if objection is made for the redactions on a public document request, you may be called upon to more thoroughly justify the reason for redaction. Any costs incurred by the city attorney to determine whether items marked for redaction are in compliance with Government Code Sections 6254 and 6255 may be passed on to the applicant.******

Occupational Health and Safety

CAL/OSHA provides a free consultation service for businesses wishing to develop compliant workplace health and safety regimens. Areas of concern may include repetitive strain injury, MSDS, the proper fitting of respiratory equipment, and workers compensation. Thrive Society will engage the department's free consultation service to ensure our business meets or exceeds these workplace safety standards.

Odor Mitigation and Control

Thrive Society will implement measures that will eliminate odor issues resulting from our operations. Thrive Society plans on installing an activated carbon filtration system and filters on the HVAC systems that will mitigate odor nuisances.

Operational protocols will be upheld to limit the exposure of open cannabis containers to ambient air to mitigate odors at the source. Open containers of cannabis and cannabis products will be permitted only in authorized areas of the facility, and only for good reason.

Odor Mitigation Equipment

The odor control equipment used within the facility includes:

Portable Room Air Cleaner

The Model 300 Portable Room Air Cleaner is a highly efficient and portable ambient room air cleaner. This unit is equipped with a powerful fan and high-quality HEPA filtration media that is up to 99.97% efficient on particles 0.3 microns and larger. Activated Carbon filtration is also an option for the removal of organic chemicals and odors. This system features quiet operation, low power consumption, and variable speed control. The small footprint of the Portable Room Air Cleaner makes it an ideal choice for smaller environments that require air purification.

The Model 300 Portable Room Air Cleaner can provide an effective and economical solution for our laboratory and industrial ambient air cleaning applications. This machine has a two year warranty and comes with product owner's manual to specify periodic maintenance. Electrical requirements:115/1/60, 2 amps - 220/1/50, .75 amps.

CosaTron Air Purifiers

One CosaTron Model LC2000 mounted on the HVAC system and at least two CosaTron Model RV750's to be utilized in the occupied space. For efficient odor removal, the system will create an air recirculation rate of about 12-15 times per hour which equates to

4,500 – 5,625 CFM. The combination of the LC2000 system on the return of a 5 ton unit (2,000 CFM) and two RV750 systems (1,000 CFM each) will get us to the appropriate air change rate. This equipment is for adequate control over air pressure, microorganisms, dust, humidity and temperature and appropriate for the manufacture, processing, packaging or holding of cannabis products.

Horizontal Negative Pressure Fume Extractor

The Model 300 Winged Sentry is a benchtop fume extraction unit that offers a unique design and horizontal airflow pattern. It features infinitely adjustable “wing flaps” to assist in directing contaminated air towards the unit’s inlet and into the filter chamber while the operator works between the wings. This system offers hood-like containment without the confinements of working within an actual hood. We can place these wings in the most effective position for the application, or they can be placed flat against the sides of the unit to conserve space. Typical applications performed in conjunction with the Winged Sentry are fume extraction, pharmaceutical applications like powder and capsule filling, R&D, and any other applications that involve VOC fumes and dusts. We will select appropriate filtration media for the Winged Sentry based on the application being performed by the operator for odor, and particulate control. HEPA [up to 99.97% efficient on particles 0.3 microns and larger], ASHRAE [up to 95% efficient on particles 0.5 microns and larger], and Activated Carbon are the most common options for this unit. We will utilize this machine with our rosin press and extract fillers. Variable Speed Control Standard on 115V: 350 CFM High, Down to 50 CFM Low: 115/1/60, 2 amps to 220/1/50, .75 amps. This machine has a two year warranty and comes with product owner’s manual to specify periodic maintenance.

Air Handling System Standards

In Addition, Thrive Society plans on installing an activated carbon filtration system and filters on the HVAC systems that will mitigate odor nuisances. The system installed include the following features:

- A charcoal air filtration system, including pre -filters and particulate matter air filters, on air supplies to production areas, with the intakes placed in areas of highest anticipated contaminant concentration. The ambient air will be circulated through the activated carbon filters and discharged clean. Air handlers will maintain a ventilation rate of at least 15 cfm/occupant based on occupancy of 30 persons at any given time.
- Periodic testing shall be conducted to ensure that the odor control systems are operating appropriately. As the filters age, replacement will be required and will be conducted, as determined by the calibrated sensor on the test equipment.

We will utilize testing standards in accordance with Standardized Odor Measurement Practices for Air Quality Testing. Testing shall be done using a field Olifactometer, calibrated in accordance with ASTM E544-75 and AWMA odor control standards. We will plan scheduled odor monitoring walkabouts periodically around the exterior of the site and near the exhaust system.

Weights and Measures

Weighing devices used in the facility will be approved, tested and sealed in accordance with Chapter 5 (commencing with Section 12500) of Division 5 of the Business and Professions Code, and registered with the Nevada County Sealer of Weights and Measures.

Approved and registered devices will be used whenever:

- Cannabis or cannabis product is bought or sold by weight or count;
- Cannabis or cannabis product is packaged for sale by weight or count;
- Cannabis or cannabis product is weighed or counted for entry into the track-and-trace system

Cannabis Waste Disposal

All waste, including waste composed of or containing medical cannabis products, will be securely stored and disposed of in accordance with applicable state and local laws and regulations. No medical cannabis waste will ever be sold or distributed to a cultivator, manufacturer, dispensary or other licensed entity. All aspects of the cannabis and cannabis byproduct wastes, weights, ID numbers and associated data is stored in the system indefinitely. Destruction event information and explanations are also documented and stored within the track-and-trace software system. This data cannot be modified or deleted by the dispensary center employees or even by track-and-trace software. Track-and-trace software records manual inventory adjustments through a detailed notes section. The reason for disposal and, if applicable, disposal company are recorded and archived to the 16-digit barcode associated with the disposed cannabis.

As with all transactions in the track-and-trace software system, the employee responsible for the transaction is required to enter a PIN number or biometric fingerprint recording the date, time, and reason for the transaction.

Waste Disposal Procedures

Cannabis waste products may occasionally be generated in the normal course of operations (cannabis by-products, spoiled goods, or cannabis flower or manufactured

cannabis which arrives to our facility but does not pass quality assurance (lab screening and is deemed to be un-remediatable).

In compliance with state regulations, all cannabis waste will be quarantined and temporarily held in a secure locked receptacle. Prior to rendering the medical cannabis unusable and unrecognizable, authorized employees will enter date/time, UID/ batch number, weight, quantity, type of product or strain of flower, and disposal reason information about the medical cannabis into the track-and-trace system. At least two authorized personnel, including at least one supervising manager, must be present during the disposal process, and all parts of the disposal process must take place under video surveillance that has been confirmed by a supervising manager to be operational. The documentation of this event will be maintained for at least 5 years. All cannabis waste products will be removed from their packages and rendered unusable and unrecognizable by mixing with a minimum of 51% non-cannabis material prior to being sent to an authorized off-site composting or disposal facility.

Prevention and Detection of Diversion and Theft

Prevention of diversion and theft is of highest priority for our management team, for state and local regulators, and for law enforcement. In addition to assuring that the facility perimeter is secure, risk mitigation strategies shape all aspects of day-to-day operations in Thrive Society's distribution facility. Our Security Plan is multi-faceted, and more details can be found in *Section 4. Safety and Security*.

Zero tolerance for diversion

Any person that is part of or aware of any theft or diversion of cannabis will result in immediate termination and reporting the incident to the proper authorities. Affirmative consent to this policy will be a precondition of employment.

Inventory Reconciliation

The Bureau of Cannabis Control's distribution regulations require that a full inventory reconciliation occur at a minimum every 14 days. The Department of Public Health's manufacturing regulations require a full reconciliation occur every 30 calendar days. If any inventory discrepancies are discovered between the physical inventory and the track-and-trace system record, management will conduct an audit.

[redacted]

ORIGINAL

REDACTION JUSTIFICATION INSERT
(To be inserted for every instance of redaction)

RRG-Mnv.Cp.Df.-91

Nevada City Medical Cannabis Business Name: Thrive Society

The following page(s): TSL-M.nv.C.p.D.f-83
<insert unique page identifier, or identifier range>

has (have) been redacted or withheld from public disclosure, as determined by

Basil McMahon, Vice-President, Thrive Society
<insert name, professional title, affiliation with applicant>

because the information contained therein is exempt from disclosure under the following Government Code provisions:

Mark with "X" where applicable	Government Code provision:	Examples of information that may be withheld pursuant to each government code section:
	Section 6254, subd. (c)	Personal, medical, or similar files, the disclosure of which would constitute an unwarranted invasion of privacy
X	Section 6254, subd. (f)	Investigatory or security files compiled by a local agency for licensing purposes
	Section 6254, subd. (n)	Licensee's personal financial data
	Section 6255, subd. (a)	Personal contact information (business contacts should not be redacted)
	Section 6254	General public interest exemption (provide explanation below)
	Other	(Provide explanation below)

Explanation for redaction:

******Please note that if objection is made for the redactions on a public document request, you may be called upon to more thoroughly justify the reason for redaction. Any costs incurred by the city attorney to determine whether items marked for redaction are in compliance with Government Code Sections 6254 and 6255 may be passed on to the applicant.******

Local and State Law Compliance

Compliance with Nevada City Ordinance 2017-06

Thrive Society commits to compliance with the key requirements for Medical Cannabis Businesses, through the application and permit approval process contained in Title 9, Chapter 9.22 of the Nevada City Municipal code, and resolutions adopted pursuant to this Chapter.

We shall obtain a medical cannabis business permit from the City before commencing operations. We will maintain compliance with all applicable state laws pertaining to our operation including obtaining all necessary licenses from the state, and shall comply with all applicable operational and zoning requirements set forth in the Nevada City Municipal Code.

We understand that within ten (10) calendar days after the date of a decision of the City Manager or his designee(s) may revoke, suspend or deny a permit, or to add conditions to a Permit, or within ten (10) calendar days after the Planning Commission has approved or denied an application for a medical cannabis business permit, an aggrieved party may appeal such action by filing a written appeal with the City Clerk setting forth the reasons why the decision was not proper. We understand the written request for an appeal and the appeal hearing process.

We will work closely with the planning commission, engineers, architects, law enforcement, and Fire Marshall to establish a fully secure, discrete and compliant business in our facility. We shall comply with the security plan submitted, once is approved by the City Manager. which may include building specifications, lighting, alarms, and state licensed security personnel. In our business plan, we have implemented all security requirements for security surveillance cameras, security video recording and retention, the alarm system, and creating an emergency plan for report to the Nevada City Police Department for any criminal activity occurring on the cannabis business site.

Our proposed facility meets the zoning requirements set forth for appropriate manufacturing zoning and cannabis business districts set forth in Section 17.142 of the Nevada City Municipal Code. We will comply with all the packaging and labeling requirements set forth by the city and the state. Thrive Society will work together with the City and Planning Commission to modify or alter our proposed plan to address any

outstanding questions or concerns raised, and further commit to fostering a relationship of trust and open communication with our partners in City Hall.

Compliance with California State Laws

Thrive Society commits to compliance with all applicable state laws, including but not limited to, the MAUCRSA and regulations governing commercial cannabis businesses promulgated by the Bureau of Cannabis Control, the Department of Public Health, and the Department of Tax and Fee Administration:

- California Code of Regulations, Title 17 Division 1 Chapter 13, *Manufactured Cannabis Safety*
- California Code of Regulations, Title 16 Division 43, *Bureau of Cannabis Control*
- California Code of Regulations, Title 18, Division 2, Chapter 8.7, and Title 18, Section 3700, *Cannabis Tax Regulations*

Designating a Compliance Officer

Ongoing compliance needs will be extremely important. Lyle (Basil) McMahon, Vice-President of Thrive Society, will be our designated in-house Compliance Officer. He is proficient in cannabis regulations at large. He is a member in the policy committee of the California Growers Association, active with the Cannabis Distributors Association, and longtime member of the Nevada County Cannabis Alliance.

Basil will help ensure good manufacturing practices are used concerning all aspects of cannabis product manufacturing, including disease control, cleanliness, personnel, proper storage, cleaning of equipment, sanitary operations, batch production, Track-and-Trace Program requirements, waste management, and facility construction and design. He will assure the care that must be taken in dealing with raw materials and ingredients. Our compliance officer will also oversee manufacturing operations including hazard analysis, preventive controls, inventory control, weights and measures, and machinery qualification. As part of our operational plans, our manufacturers must adequately train employees, handle product complaints, and manage recalls. We will also address significant regulatory concerns in the areas of product standards, safety and security, labeling and packaging, Track-and-Trace and many others.

If areas of specific expertise arise that are beyond the knowledge base of our compliance officer, he has extensive contacts with lawyers, accountants, our controller, HR Company, and respected industry advisers who are available to advise and assist in finding solutions to maintain compliance and model best practices.

Track and Trace System

Track and Trace Overview

Thrive Society will utilize track-and-trace reporting software compatible with METRC Franwell, the vendor selected by the State of California. The METRC (which stands for *Marijuana Enforcement, Tracking, Reporting and Compliance*) track-and-trace interface is a state-of-the-art inventory control system designed for the production and distribution of legal, regulated medical cannabis throughout the licensed cannabis supply chain in California. METRC has become the most widely used track-and-trace inventory control system in states which have implemented medical and adult-use cannabis regulatory regimens.

General Track and Trace Guidelines for Diversion Prevention

METRC's track-and-trace system incorporates the use of RFID (Radio Frequency Identification) technology combined with serialized item tracking, the system creates an "end to end" surveillance system where the government oversight representative has real-time visibility at any given time into the inventory at all the locations (does not rely on audits for tracking). The state regulatory agencies can decide whether to allow external systems the use of an API to pull data on a secure validated connection. Finally, the regulatory body can use the reporting engine to build ad-hoc reports based on their individual needs.

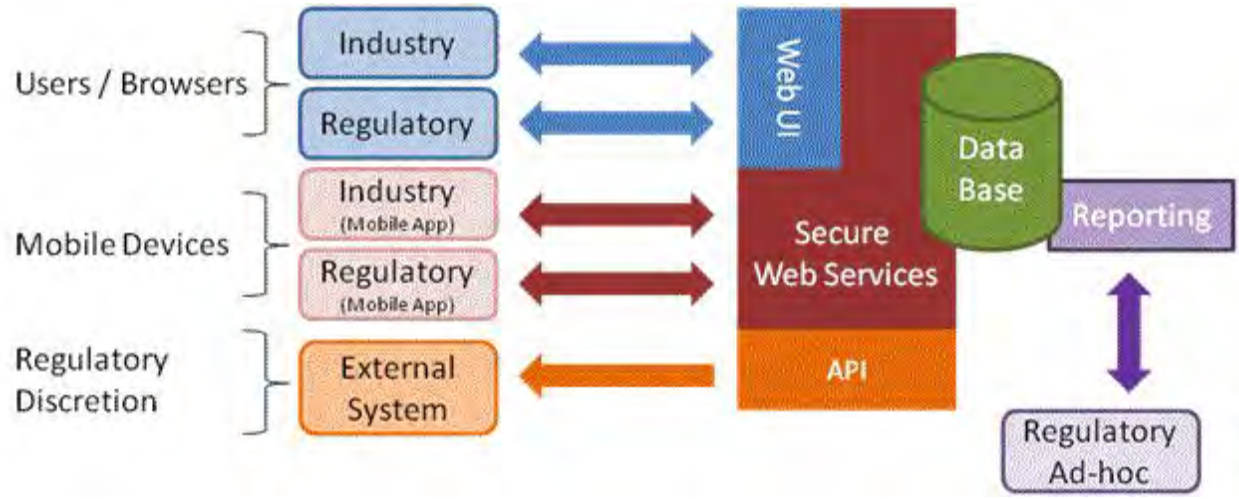

Track-and-trace inventory control and reporting flow diagram

Third Party System Integration

We have identified BioTrackTHC, Viridian Sciences and Flowhub as leading 3rd-party vendors in Point of Sale systems for cannabis businesses and integrates state-mandated Seed-to-Sale traceability technology. We will be selecting a 3rd party vendor to incorporate additional integration features between inventory control & reporting needs, as well as our accounting software system.

Track and Trace Account Conduct

As per state regulations, Thrive Society will establish an account in the state's track-and-trace system prior to engaging in any commercial cannabis activities and maintain an active account while licensed. Thrive Society will designate at least one of the owners to be the track-and-trace system administrator. We will conduct training prior to accessing the system and participate in ongoing training as required by state regulations.

Track and Trace Users

Management will designate track-and-trace system users, as needed, and require the designated users to be trained by our track-and-trace system administrator in the proper and lawful use of the track-and-trace system before the designated users are permitted to access the system. We will maintain an accurate and complete list of all track-and-trace system administrators and users and update the list immediately when changes occur. We will cancel any track-and-trace system administrator or user from an associated track-and-trace system account if that individual is no longer a licensee representative or the administrator. As per state regulations, we will correct any data that is entered into the track-and-trace system in error within 24 hours of discovery of the error.

Timeline

Timeline Overview

Our timeline includes a proposed multi-phased approach to develop and grow our business. Our goal is to establish a strong operational foundation in the core activities and internal management systems necessary to build a successful business in a highly regulated market, and then incorporate additional activities necessary for company growth upon meeting specified performance benchmarks. We are mindful of executing

on each step and not spreading ourselves too thin early on, and this approach guides us to structure the roll-out of our operations.

February

- Submit City application to the Planning Commission
- Finalize proposals for construction build out

March

- (60 day waiting period)

April

- Presentation before planning commission for approval
- On approval of Thrive Society's permit, submit building plans to the planning commission for building approval
- Finalize design for packaging
- Buildout of interior upgrade, Hvac, and odor mitigation systems

May

- Submit State application for temporary licensing
- Completion of interior upgrade, Hvac, and odor mitigation systems
- Order equipment and packaging
- Install all security measurements and alarm systems
- Establish IT systems, track and trace, and SOP for all systems
- Complete final inspections from the planning commission
- Obtain approval from State for temporary licensing
- Begin retrofit on transportation vehicles

June

- Begin Operations for Distribution Division
- Phase I of Operating Plan
- Launch In house brands

July

- Implementation of the track-and-trace program

August

- Open Manufacturing Division
- Begin Phase II of Operations Plan

October

- Phase III of Operations Plan

Build-out

We have contracted Siteline Architecture to design our site plan and proposed tenant improvements. They will continue to complete the plans required for permitting for the buildout of our interior walls, doors and storage cooler vaults. We are working with Brewer Heating and Air Cooling for our odor Mitigation and HVAC buildout. These steps are priority in our buildout process as well as installing the alarm and security systems once the buildout is complete. We will use local contractors Beam Easy Living or Gold Country Security to install our surveillance systems once build-out is complete.

Phase I

Once final inspections have been completed of the facility-build out and our temporary state licenses have been secured, Thrive Society will first begin implementing Phase I of our Business Development Plan. Phase I is focused on distribution of 3rd party goods as well as in-house branded flower and pre-rolls. In this stage, we will be dialing in all our internal systems that will serve as the infrastructure for expansion of business activities. Examples of these internal systems and core activities include:

- Personnel training and implementation of SOPs
- Sourcing supply from permitted cultivators and manufacturers
- Transportation protocols to/from facility, and shipping manifests
- Protocols for product testing and sample selection
- Launching of limited in-house brand campaigns
- Establish sales accounts with permitted retailers
- Packaging and labelling of in-house branded flower and pre-rolls
- Distribution of established 3rd party products to permitted retailers
- Implementation of the track-and-trace program (July 2018)
- Implement procedures for the proper disposal of cannabis waste
- Anticipatory preparations for Phase II of Business Development Plan

Phase I will involve only a limited amount of activity pertaining to the manufacturing aspect of the facility. We expect that our quickest path to sustainable revenues is to focus on dialing in the distribution activities and internal systems to ensure an efficient and successful scaling of the business.

Phase II

In Phase II, while continuing with a lean strategy, we increase the complexity of distribution activities and introduce activities in the manufacturing sides of the facility:

- Build our base of retail customers, using CRM system and Sales Director
- Increase the pool of suppliers we service, and establish variable service agreements
- Integrate METRC with 3rd party inventory management & accounting software systems
- Begin packaging and order fulfillment service for existing brands
- Begin production of non-solvent extraction (Kief, Rosin) in manufacturing facility
- Do market research in advance of launching full in-house product lines
- Anticipatory preparations for Phase III of Business Development Plan

In the manufacturing side of the facility, we propose starting with the simplest and most direct pathways to sustainable revenue, which we believe are:

Packaging of manufactured products for other licensed manufacturers

For example, one of our prospective licensed suppliers has expressed that they are quite busy doing the co2 extraction activities of their product production, and would like to find a partner manufacturer to assist in filling and packaging their vape pen cartridge products. As a manufacturer who is also a distributor, we could generate revenue by performing these manufacturing services, and then assisting in the distribution of the product to the retailer.

Production of Rosin-based concentrate products

Rosin concentrate products are relatively to produce compared to other more complicated process techniques, and command a respectable amount of market share.

Phase III

As we establish a base of production activity in the manufacturing side of the facility to complement the existing distribution operations, our management team will dedicate time to prepare for Phase III, the final phase of the Business Development Plan, in which we will:

- Formulate additional value-added products like tinctures, topicals, and a limited edibles line

- Develop branded product lines that will be launched into the market with full PR, marketing and advertising
- Market our distribution services for special service revenues, including: product recall, remediation, product transportation to permitted special cannabis events

Organizational milestones will be the metric that we use to determine the As we enter Phase II, and then again in Phase III, we will dedicate the personnel and financial resources necessary to succeed as we expand to occupy the full premises of our facility, and the full scope of activities permitted by the distribution and manufacturing state licenses we are seeking.

Marketing Plan

Market Analysis

Thrive Society seeks to establish a business providing licensed and secure product distribution services, and producing artisan medical extracts and infused products, with a specific emphasis on elevating emerging brands based in Nevada County and the Sierra Foothills region (in jurisdictions where, and when, medical cannabis business permitting becomes available).

Thrive Society's marketing strategy is to emphasize the social and ecological values of craft cannabis, and tell compelling origin stories about it's heritage. As a distributor we will play an important role in driving demand, differentiating our product offering by developing brands consumers will authentically connect with, and conducting our business in a way that makes visible the values we uphold. Through maintaining enduring relationships with local trade organizations, advocating for cannabis appellation development and supporting co-operative farming efforts, we will work to proactively develop brand awareness of the unique qualities that make our region's craft cannabis culture so special.

Licensed cannabis cultivators and product makers who aim to establish reputable brands will depend on knowledgeable and trustworthy distribution and manufacturing partners to get their products on the shelves of dispensaries, and in the hands of patients and consumers.

With a new regulatory framework now in effect, the cannabis industry in California is in the midst of transformation. This presents an opportunity to position a home-grown cannabis distribution company with the right values and community ties to carry on in the tradition of sustainable start-up businesses that our hometown is known for. We feel that we are uniquely well-positioned to serve as a nexus that can provide leadership in the

region, differentiate our supply network in the market and step up to meet growing consumer demand for artisan cannabis.

Marking Compliance

As a permitted cannabis Distributor and Manufacturer, the nature of our business is primarily “B2B”- both our suppliers and our customers will be other permitted cannabis companies. While it is important to foster a good reputation with the end consumer, ultimately the success of our business is contingent upon providing our customers (permitted dispensaries, delivery companies, and other distributors) good service and quality product.

Thrive Society will produce branded cannabis products within the facility. Our marketing plan for our products will target adult consumers. Extensive marketing analysis will be conducted to identify opportunities and inform brand strategies.

Advertisement

Under no circumstances will marketing or advertising materials, or products/services be designed to appeal to children or minors. All of our marketing & advertising communications will comply with additional state regulations, including:

- Ensuring that all advertisements are placed only in publications in which 71.6 percent of the audience is reasonably expected to be 21 years of age or older, and verified by up-to-date market information.
- In all of our own communications (including websites, direct marketing, mailing lists, and phone communications), verifying that the viewer/user is 21 years of age or older.

Financial Projections

Thrive Society, with the help of an experienced CFO, developed a financial model that is based on data, comparable businesses and our operational capacity. We have also consulted with other distributors in the industry to receive support and guidance in our data sets. We feel confident in our projections and believe they are conservative with a cushion included.

3-Month Pro Forma

[redacted]

Proof of Capitalization

[redacted]

3-Year Pro Forma

[redacted]

[redacted]

[redacted]

[redacted]

[redacted]

Parking Plan

The intent of the parking plan is to provide an analysis of the parking needs of our proposed business, to mitigate any negative impacts and to outline efforts we will make to stay in compliance with City Codes pertaining to off-street business parking requirements.

ORIGINAL

REDACTION JUSTIFICATION INSERT
(To be inserted for every instance of redaction)

RRG-Mnv.Cp.Df.-103

Nevada City Medical Cannabis Business Name: Thrive Society

The following page(s): TSL-M.nv.C.p.D.f-93 - TSL-M.nv.C.p.D.f-94
<insert unique page identifier, or identifier range>

has (have) been redacted or withheld from public disclosure, as determined by

Basil McMahon, Vice-President, Thrive Society
<insert name, professional title, affiliation with applicant>

because the information contained therein is exempt from disclosure under the following Government Code provisions:

Mark with "X" where applicable	Government Code provision:	Examples of information that may be withheld pursuant to each government code section:
	Section 6254, subd. (c)	Personal, medical, or similar files, the disclosure of which would constitute an unwarranted invasion of privacy
	Section 6254, subd. (f)	Investigatory or security files compiled by a local agency for licensing purposes
X	Section 6254, subd. (n)	Licensee's personal financial data
	Section 6255, subd. (a)	Personal contact information (business contacts should not be redacted)
	Section 6254	General public interest exemption (provide explanation below)
	Other	(Provide explanation below)

Explanation for redaction:

******Please note that if objection is made for the redactions on a public document request, you may be called upon to more thoroughly justify the reason for redaction. Any costs incurred by the city attorney to determine whether items marked for redaction are in compliance with Government Code Sections 6254 and 6255 may be passed on to the applicant.******

Thrive Society Facility

Our proposed facility occupies approximately 4900 sq. ft., of which 600 sq. ft. will make up our management offices and employee break room, 2000 sq. ft. will be designated for manufacturing and 2600 sq. ft. for distribution. [redacted]

Personnel and Authorized Visitors

Our facility will not be open to the public. Only Thrive Society personnel and authorized visitors will have access to our premises. [redacted] For more information about our policies pertaining to authorized visitors, please refer to Section 4 for our Safety and Security Plan.

Allocated Parking Spaces

Our Commercial Tenancy Agreement with the Landlord allocates a total of 16 parking spaces for Thrive Society. We believe this allotment is more than sufficient for our needs as our team at its largest will be 12 people.

Parking Amenities for the Building

The building at 138 New Mohawk is serviced by two adjacent parking lots, amounting to an ample +/-110 spaces, plus a few disability-access parking spots in front of the building. This parking lot is designed for use by the multiple tenants of the building as well as visitors. At present and in the recent past, the parking lot is routinely only 20% full on average. This utilization rate may increase in the near future as new tenants move in to occupy vacant commercial space in the building. But in the estimation of the Landlord, it is very unlikely that the parking lot will be insufficient for the needs of the building's occupants. The building owners have also informed us that they own an additional raw lot right adjacent to the building that they are willing to convert into an additional parking lot, if the need arises in the future.

Thrive Society has reached out to make contact with the other proposed cannabis business tenants in the building. All of the proposed businesses in our building are also B2B (Business to Business) companies and their facilities will not be open to the general public. Like Thrive Society, our new neighbors in 138 New Mohawk have small teams of employees and do not expect any walk-ins or increased public traffic into the building.

ORIGINAL

REDACTION JUSTIFICATION INSERT
(To be inserted for every instance of redaction)

RRG-Mnv.Cp.Df.-105

Nevada City Medical Cannabis Business Name: Thrive Society

The following page(s): TSL-M.nv.C.p.D.f-95
<insert unique page identifier, or identifier range>

has (have) been redacted or withheld from public disclosure, as determined by

Basil McMahon, Vice-President, Thrive Society
<insert name, professional title, affiliation with applicant>

because the information contained therein is exempt from disclosure under the following Government Code provisions:

Mark with "X" where applicable	Government Code provision:	Examples of information that may be withheld pursuant to each government code section:
	Section 6254, subd. (c)	Personal, medical, or similar files, the disclosure of which would constitute an unwarranted invasion of privacy
X	Section 6254, subd. (f)	Investigatory or security files compiled by a local agency for licensing purposes
	Section 6254, subd. (n)	Licensee's personal financial data
	Section 6255, subd. (a)	Personal contact information (business contacts should not be redacted)
	Section 6254	General public interest exemption (provide explanation below)
	Other	(Provide explanation below)

Explanation for redaction:

******Please note that if objection is made for the redactions on a public document request, you may be called upon to more thoroughly justify the reason for redaction. Any costs incurred by the city attorney to determine whether items marked for redaction are in compliance with Government Code Sections 6254 and 6255 may be passed on to the applicant.******

Nevada City Code of Ordinances

Nevada City Code *17.80.030* Section G.4 stipulates *Off-Street Parking- General Requirements* for "*Manufacturing, R&D, Light Assembly, Warehouses and General Storage*". This category appears to be the most appropriate for the nature of our business, although the requirements are rather steep. In paraphrasing the Code, it states: 8 spaces are required for the first 1000 sq. ft. of floor area, plus an additional 1 space per 250 sq. ft. of floor area thereafter, plus 1 space for each 2000 sq. ft. of storage area; or 0.85 spaces for each employee on duty at the same hours, whichever is greater.

Interpretation of the Code Requirements

If we apply the calculation of 0.85 spaces for each employee on duty, we would require 10.2 total parking spaces. If, however, we perform the calculation based on total square footage, 4,900 sq. ft. (of which 1050 sq. ft. is storage space), we arrive at 20.4 spaces.

Because the floor area of our facility will be taken up by machinery, counter space, equipment and perimeter walking paths, we don't see the need for 1 space per every 250 sq. ft. Due to the nature of our business, we do not foresee needing 20.4 spaces. The 16 spaces allocated by our lease will be more than sufficient for our team of 12. Note that our safety and security plan outlines our efforts to stagger authorized visitor appointments to avoid overlapping visitors. We anticipate additional 2 spaces max needed for visitors at any given time.

Our lease in the 138 New Mohawk building is for 4900 sq. ft. out of a total 35,000 sq. ft. throughout the building (or about 14% of total). The ratio of space we have mirrors the portion of the building we would occupy.

Redress and Impact Mitigation

Personnel may arrange a carpool or use alternative transportation to commute to work. We will also ensure that all authorized visitor appointments will be scheduled with cushion to avoid any overlapping, reducing the need for additional visitor parking spaces.

If it is requested by the Nevada City Planning Commission, Thrive Society will approach the Landlord to request that our lease be amended to allocate additional parking spaces, to meet Code requirements and/or meet any determination of requirements made by the Planning Commission.

3. Neighborhood Compatibility Plan

Overview

There are specific considerations for the location of any medical cannabis business, and Thrive Society's proposed facility is no different. We take seriously our responsibility to effectively address any undue impacts that our proposed business may have on neighborhood businesses, organizations and residents, and outlined in this Neighborhood Compatibility Plan is our approach to doing just that.

Community outreach is not a task that ends if and when our permit application is approved. Indeed, to the contrary, it is necessary to maintain a continual effort of engaging with neighbors, community stakeholders, law enforcement and city government to optimize our compatibility with the community we live and work in. In this preliminary period, the potential impacts of our business are just a topic of conversation about a project that may hopefully be realized soon. But in order to be awarded the privilege of obtaining a MCB permit to operate, we will need to demonstrate our commitment to continuing to uphold efforts to engage with neighbors in the community, answer questions, respond to concerns, and ultimately build bridges.

Included here, we have provided some preliminary information about our business, our relationship to the neighborhood, and our outreach efforts to date. We will provide an update regarding our community outreach efforts for when our hearing with the Planning Commission is scheduled, if granted.

Neighborhood Outreach

For the principals of Thrive Society, our relationships with our neighbors are important. Answering questions, responding to concerns, and building rapport is important. We want our neighbors to trust that if they have a concern or an issue, that they can always approach us; that we will listen to their input, and that we will work to find a solution that all parties will find acceptable. If a conflict ever arises, we will commit to communicate respectfully, negotiate in good faith and endeavor to not let unresolved issues grow into unresolvable problems.

Neighborhood Outreach Letter

We have taken measures to reach out and communicate directly with each business owner/manager or resident within a 300-foot radius of our facility. Included in this application packet is our *Neighborhood Outreach Letter,* which is included with this application. We requested a list of the tenants in the building from the building manager, and hand-delivered the letter in person to neighbors and nearby businesses around midday on Monday, January 26, 2018. We made a follow-up visit on Thursday, February 1st, 2018. To the few offices in the building that were unattended at the times we visited, we have left a copy of the letter, with our contact information.

Neighbor Feedback & Concerns

Neighbors within the 138 New Mohawk Building

- Therapeutic Bodyworks, Body Wisdom, Miriam massage, and Rinehart Massage: are all tenants in small offices whose work is of a personal and private nature. In one case, a “In session- do not disturb” sign was posted, at another, a sign read “filming- do not disturb” and in the other two, it appeared as if no one was home. Letters delivered on Monday appeared to have been picked up or moved by thursday.
- Advantage Academic Counselling: No one present. Left a letter
- NC Democrats: No one present. Left a letter
- Stewart Title: No one present. Left a letter. Recieved a text message response on February 5th from John, the “dynamic one-person Stewart Title team”. His message said “Thanks for handing the fact sheet. Very professional and appreciated.”
- FiveFour Marketing: Online marketing firm owner and proprietor Angela was very interested and supportive. We had an inspiring conversation about marketing, the cannabis industry, interactive technology, and Nevada City’s “Cultural District” award and projects. Her office would be one of the closest in the building to our front entrance, and we made a point to tell her about our business and ask if she had any concerns. She asked about foot traffic, and we informed her that our business was not open to the public but would occasionally be receiving authorized visitors (suppliers or customers). She seemed to find our explanation satisfactory and did not express any other concerns. We hope that we may actually be able to develop a business relationship, utilizing her skills in our marketing efforts, and we are grateful to have such an interested and supportive immediate neighbor.

- Caltrans (DOT): We stopped in and introduced ourselves to the team at the Caltrans office, in the basement of the building, adjacent to the bay door and service elevator. We met 5 friendly staff, who were quite curious about our business. They informed us that we were the first and only prospective cannabis tenant party to come introduce ourselves, and thanked us for coming to visit. We affirmed to them our intention to be mindful of the impact our proposed business could have on their operations, and we asked for more information about how they use the building, so as to be able to cater our activities to minimize negative impacts. They had many questions, which we took time to answer to the best of our abilities, and expressed a couple of concerns. Their concerns fell into three general themes:

[redacted].

2. Odor: Some of the Caltrans staff were concerned about odor. We acknowledged the validity of their concern, explained some detail about the equipment and protocols that we propose implementing to mitigate odor, and made a commitment to addressing any future complaints regarding odor emitted from our facility that may inadvertently occur in the future. We confirmed with them that we would not be cultivating cannabis, that the entire premises would be equipped with air filtration systems, that open packages of cannabis flower would only be authorized in specific areas of the facility, and that we were not proposing to extract cannabis using solvents, either volatile or non-volatile.

3. Security: We spoke to Caltrans staff about our intention to proactively engage with law enforcement and security consultants to develop the best security policy we could. [redacted]

[redacted] to raising the issue with the building manager to try to come up with a proactive solution, beyond just installing security lighting.

We committed to returning to visit again soon to provide a complete copy of our security plan for their reference, once we had taken our working draft and received feedback on it from Jarrett at Gold Country Security. We will be delivering this information on Monday, Feburary 12th, the same day we submit this application, and will document any additional concerns or questions raised by Caltrans going forwards, and steps taken to address those concerns.

Neighboring Businesses Within 300 Feet

- Pine Creek Vet Clinic (128 New Mohawk): we stopped in to deliver our letter and spoke with a female Veterinary Assistant. She thanked us for our letter. We asked if she might have any concerns, and she said that she didn't expect our business to have much of an impact on them, as they had their own parking lot and driveway. She agreed to pass our letter on to the head Veterinarian.
- Nevada County Narrow Gauge Railroad Museum (5 Kidder Ct): We stopped in at a perfect time, to meet twelve jolly, grey haired gentlemen while they were sitting around a meeting room table possibly just finishing up lunch. We informed them that we were looking to move in next door and wanted to introduce ourselves. They said “welcome!” And asked us what kind of business. We told them “medical cannabis distribution & manufacturing”, and they lit up with smiles, laughter, thumbs up, and words of encouragement. We delivered our letter and asked if they had any questions or concerns. One gentleman piped up with a question: “Could we be your official product ‘testers’?” That got some laughs. We explained that regulations strictly prohibited sale or transfer to anyone other than a licensed dispensary, and we absolutely intended to comply with the law. The curator, Grover Cleveland, provided us his card and welcomed us back to help them build narrow-gauge train tracks anytime.
- Inn Town Campground (9 Kidder Ct) : The entrance gate was closed and a sign was posted stating that the campground was closed and that personnel were away for two weeks. We called them on the phone to see if anyone would pick up, and we left a message introducing ourselves, informing them of our business and inviting them to call back with any questions or concerns, or to meet in person to discuss. We also left a copy of our *Neighborhood Outreach Letter* in their mailbox.

Discrete & Secure Operations

Our facility will not be open to the general public, and only visitors who obtain prior authorization and provide identification will be allowed to enter. As we are not a retail storefront, but a “B2B” company with security considerations, we have an incentive to keep a low profile. [redacted] There will be no signage visible from any public right-of-way, save for potentially a small discreet sign on the front door, thereby limiting unwanted attention from the street, and helping mitigate the threat of crime.

Only authorized visitors will be permitted in the building. [redacted]

Odor Mitigation

To fulfill our obligation to be good neighbors and in keeping with our commitment to discretion, we will implement measures that will minimize or eliminate odor resulting from

our operations. Thrive Society will install sophisticated carbon filtration systems and filters on the HVAC systems that will mitigate odor nuisances. Carbon filtering is a method of filtering that uses a bed of activated carbon to remove contaminants, impurities and smell using chemical absorption. Carbon filters and fans come in sizes of CFM's (cubic feet per minute) which is an estimated measurement of the air each fan can move in a minutes time. Our detailed plan addressing this common concern is included in *Section 2. Business Plan (Odor Mitigation)*.

Security Concerns

Security is, in our estimation, perhaps the most consequential consideration of our Neighborhood Compatibility Plan. When it comes to security, we intend to take no shortcuts. While securing the perimeter of our proposed premises inside the building at 138 New Mohawk is of course necessary (and required by state regulations), we intend to go further, and have initiated an effort to coordinate security plans with the other prospective cannabis business tenants in the building.

[redacted]

Community Relations

Our commitment to community relations extends beyond the immediate vicinity. Even though our company only exists on paper yet, the presence of our proposed business has already had an indirect local impact that we intend to accept responsibility for and, to the best of our abilities, make right.

It came to our attention shortly after signing our lease, that it is the Friendship Club, a cherished local youth service organization, who currently occupies the space that we are scheduled to move in to in a few months. We understand that there are some other wonderful service organizations who are current tenants as well who will be having to relocate because of the landlord's interest in renting to medical cannabis businesses.

ORIGINAL

REDACTION JUSTIFICATION INSERT
(To be inserted for every instance of redaction)

RRG-Mnv.Cp.Df.-113

Nevada City Medical Cannabis Business Name: Thrive Society

The following page(s): TSL-M.nv.C.p.D.f-99 - TSL-M.nv.C.p.D.f-102
<insert unique page identifier, or identifier range>

has (have) been redacted or withheld from public disclosure, as determined by

Basil McMahon, Vice-President, Thrive Society
<insert name, professional title, affiliation with applicant>

because the information contained therein is exempt from disclosure under the following Government Code provisions:

Mark with "X" where applicable	Government Code provision:	Examples of information that may be withheld pursuant to each government code section:
	Section 6254, subd. (c)	Personal, medical, or similar files, the disclosure of which would constitute an unwarranted invasion of privacy
X	Section 6254, subd. (f)	Investigatory or security files compiled by a local agency for licensing purposes
	Section 6254, subd. (n)	Licensee's personal financial data
	Section 6255, subd. (a)	Personal contact information (business contacts should not be redacted)
	Section 6254	General public interest exemption (provide explanation below)
	Other	(Provide explanation below)

Explanation for redaction:

******Please note that if objection is made for the redactions on a public document request, you may be called upon to more thoroughly justify the reason for redaction. Any costs incurred by the city attorney to determine whether items marked for redaction are in compliance with Government Code Sections 6254 and 6255 may be passed on to the applicant.******

We are mindful of the impact that having to relocate may have on the Friendship Club. While the decision to rent to medical cannabis companies was made before we made first contact with the property manager, we nonetheless take these concerns to heart, and accept some responsibility.

In light of these matters, we have sent a letter to the Executive Director of the Friendship Club to extend an offer of support to their organization as they navigate their transition. The letter was received warmly, and we have agreed to meet in person soon to discuss how we may be of service.

Thrive Society LLC
138 New Mohawk Rd., Nevada City CA 95949
Basil McMahon connect@thrive-society.com (541)-602-8812

January 26, 2018

Dear Neighbors,

I wanted to reach out to send warm greetings and to introduce myself. My name is Basil McMahon, and along with my partners Ella Alpina and Danielle Dao, we are one of the parties who is planning to move in to 138 New Mohawk Rd., and will be applying for a Medical Cannabis Business Permit from the Nevada City Planning Commission.

Our small business, Thrive Society LLC, will be locally owned and operated. We are Nevada County locals who cherish the uniquely vibrant character of Nevada City and are guided by a commitment to preserve the qualities that make this community such a special place to live. We own homes here, pay taxes and send our kids to area schools, and we care sincerely about the social and ecological well-being of our community.

In the interest of addressing any questions or concerns you might have about the nature of our business or any possible impacts on the neighborhood, we thought it would be helpful to provide you with some background and information about our business and our intentions.

Background
As you may already know, the California Legislature recently passed a comprehensive framework for the regulation of the cannabis industry. As these regulations for a licensing system are set to affect shortly, communities across the state, including our beloved hometown of Nevada City, are adopting ordinances that permit ***medical*** cannabis businesses to operate-provided that they maintain strict compliance with the robust regulations set forth by state agencies, including taxation, laboratory testing, child-proof packaging, and the use of seed-to-sale "Track and Trace" inventory control systems to prevent diversion. We are fully committed to meeting, and hopefully exceeding, these operational standards.

As these new regulations take effect, they will usher in sweeping changes to how cannabis is grown, distributed and dispensed legally in California. For our community, we feel these changes will bring about increased security, improved public safety, more professionalism from the cannabis industry, and will generate local jobs and expand the tax base of Nevada City.

Our Facility
As a licensed medical cannabis distributor/manufacturer, Thrive Society LLC will be operating a secure and professional facility that meets or exceeds the strict compliance standards set forth in California state regulations and the Nevada City Code & Ordinances. The core activities of our proposed facility include:

- Intake of medical cannabis and cannabis products, strictly from compliant and licensed suppliers;
- Ensure that the movement of all cannabis and cannabis products are reported through the state-mandated Track-and-Trace inventory control system;
- The manufacturing of medical cannabis products using no solvents or artificial ingredients;
- Assuring quality and public safety of cannabis and cannabis products through comprehensive testing by 3rd party licensed testing laboratories;
- Confirm that all inventory is packaged and labelled according to regulations, including child-proof and tamper evident mechanisms;
- Verifying that all applicable state and local taxes are collected and remitted;
- Upon meeting these criteria, medical cannabis and cannabis products will be transported to licensed dispensaries utilizing secure, licensed and bonded commercial transport vehicles.

Neighborhood Compatibility
The Gold Flat business district of Nevada City is a tranquil, idyllic area characterized by thriving local businesses and a wonderful sense of community. We seek to maintain a discreet presence, preserving the character of the neighborhood and working proactively to minimize traffic impacts and neighborhood security risks.

The landlord has informed us that the building at 138 New Mohawk may be host to at least two other proposed permitted medical cannabis businesses, in addition to our own, subject to approval. As members of the community, it is important to us that the arrival of the regulated medical cannabis businesses at 138 New Mohawk does not have an undue impact on the vicinity, or you, our neighbors. A few points worth touching on include:

Operations
Our proposed distribution & manufacturing facility is not a dispensary, and not open to the public. Thrive Society LLC. is a “Business-to-Business” enterprise, and we will only be servicing compliant, licensed cannabis operators.

[redacted]

Parking
138 New Mohawk is serviced by an ample, dedicated parking lot directly across the street that is more than sufficient for the needs of our facility. The impact of our business on street parking, or any neighboring parking lots, should be minimal.

Diversion and Youth Access
As longtime locals who cherish this community, take seriously the concern of youth access and the social and developmental risks of cannabis use in teens. We will be following strict protocols

to prevent diversion or advertising to minors, and complying with comprehensive state regulations, including the use of track-and-trace product controls.

Odor Concerns
As part of fulfilling our goal of being good neighbors, we will install a premises-wide climate control and air filtration system that will mitigate any cannabis odor resulting from our operations. No cultivation of cannabis flower will be occuring in our premises, and no on-site consumption will be permitted.

Security
Security is of paramount importance to Thrive Society LLC. A few important considerations worth noting:

- The lack of public interface allows our facility to keep a low profile. There will be no signage visible from the street, and no visitors permitted without prior authorization.
- Our Security Plan features [redacted]
- We have reached out to Nevada City Police Chief Tim Foley to request a review of our proposed security plan and protocols, and we will work hand-in-hand with local law enforcement to respond to any security incidences.

We hope that this information has been helpful. Please let us know if you have any additional questions or concerns.

Sincerely,

Basil McMahon
For: Danielle Dao and Ella Apina
Thrive Society LLC

Contact:
Basil McMahon, Community Relations
connect@thrive-society.com
541-602-8812 (cell)

ORIGINAL

REDACTION JUSTIFICATION INSERT
(To be inserted for every instance of redaction)

RRG-Mnv.Cp.Df.-118

Nevada City Medical Cannabis Business Name: Thrive Society

The following page(s): TSL-M.nv.C.p.D.f-105 - TSL-M.nv.C.p.D.f-106
<insert unique page identifier, or identifier range>

has (have) been redacted or withheld from public disclosure, as determined by

Basil McMahon, Vice-President, Thrive Society
<insert name, professional title, affiliation with applicant>

because the information contained therein is exempt from disclosure under the following Government Code provisions:

Mark with "X" where applicable	Government Code provision:	Examples of information that may be withheld pursuant to each government code section:
_____	Section 6254, subd. (c)	Personal, medical, or similar files, the disclosure of which would constitute an unwarranted invasion of privacy
_____	Section 6254, subd. (f)	Investigatory or security files compiled by a local agency for licensing purposes
_____	Section 6254, subd. (n)	Licensee's personal financial data
_____	Section 6255, subd. (a)	Personal contact information (business contacts should not be redacted)
_____	Section 6254	General public interest exemption (provide explanation below)
_____	Other	(Provide explanation below)

Explanation for redaction:

_____

_____

_____

******Please note that if objection is made for the redactions on a public document request, you may be called upon to more thoroughly justify the reason for redaction. Any costs incurred by the city attorney to determine whether items marked for redaction are in compliance with Government Code Sections 6254 and 6255 may be passed on to the applicant.******

4. Safety and Security

Overview

Thrive Society has sought to develop a robust Safety and Security section, that meets all state and local requirements. We are partnered with Gold Country Security whom has thoroughly reviewed and approved our plan (See attached letter). We will continue to update and further security measures upon future recommendations from Jarrett Fink. We have also requested a meeting to review our security measures with Nevada City Police Chief towards the end of February, or whenever is most convenient for him and his department.

Our Safety and Security section is comprised of three components:

- Facility Security Plan
- Operational Safety Plan
- Fire Safety/ Emergency Response Plan

Facility Security Plan (4A)

Purpose

The purpose of the Facility Security Plan is to outline all the protocols and measures Thrive Society will implement to ensure that our facility is secure and compliant with all state and local regulations governing security. The standards and procedures outlined here are designed to prevent incidents of theft, crime, or diversion of cannabis to the unregulated market, and to provide a safe working environment while protecting against diversion and access by minors. [redacted] The Facility Security Plan will be in compliance with all requirements outlined in the Nevada City regulations.

Physical Facility Security

[redacted]

[redacted]

[redacted]

[redacted]

[redacted]

[redacted]

[redacted]

[redacted]

[redacted]

[redacted]

[redacted]

[redacted]

[redacted]

[redacted]

[redacted]

[redacted]

[redacted]

[redacted]

[redacted]

- [redacted]
- [redacted]

ORIGINAL

[redacted]

[redacted]

[redacted]

[redacted]

[redacted].

To Agenda

[redacted]

[redacted]

[redacted]

[redacted]

[redacted]

[redacted]

[redacted]

[redacted]

[redacted]

[redacted]

[redacted]

[redacted]

[redacted]

[redacted]

[redacted]

[redacted]

[redacted]

[redacted]

[redacted]

[redacted]

[redacted]

- [redacted]
- [redacted]
- [redacted]

[redacted]

[redacted] Compliance with security protocols is a mandatory job requirement.

Physical Copy of Security Plan and SOPs

Thrive Society will maintain on-site at all times a physical copy of the most up-to-date version of the Security Plan and all related standard operating procedures.

Emergency Contacts

In strategic locations throughout our facility, emergency contact numbers will be posted for the following:

- Type 11 Distribution License Principals
- Type 6 Non-Volatile Manufacturing License Principals

- Track-and-Trace (METRC) System Administrators
- Thrive Society Board of Directors
- Bureau of Cannabis Control Inspectors
- Department of Public Health Inspectors
- Department of Tax and Fee Administration
- Inventory Control Software Tech Support
- Fire Department (both emergency and non-emergency)
- Police Department
- Nevada County Department of Environmental Health
- Poison Control Center

[redacted]

[redacted]

[redacted]

[redacted]

[redacted]

[redacted]

- [redacted]
- [redacted]
- [redacted]
- [redacted]
- [redacted]
- [redacted]

[redacted]

[redacted]

[redacted]

[redacted]

[redacted]

[redacted]

[redacted]

[redacted]

[redacted]

Regulatory Compliance

As per state regulations, Thrive Society will:

- Ensure that all medical cannabis goods batches are stored separately and distinctly from other medical cannabis goods batches on the distributor's premises.
- Ensure a label with the following information is physically attached to each container of each batch: the manufacturer or cultivator's name and license number; the date of entry into the distributor's storage area; the unique identifiers

and batch number associated with the batch; and a description of the medical cannabis goods with enough detail to easily identify the batch and the weight of or quantity of units in the batch

- Store medical cannabis goods in a building designed to permit control of temperature and humidity and shall prevent the entry of environmental contaminants such as smoke and dust. The area in which medical cannabis goods are stored shall not be exposed to direct sunlight.
- Employee break rooms, eating areas, changing facilities, and bathrooms shall be completely separated from the storage areas.

[redacted]

[redacted]

[redacted]

Operational Security Plan (4B)

Overview

The purpose of the operational security plan is to ensure all security and compliance aspects of business operations and activities, including personnel training, secure transportation and procedures for security incident response.

In the plan that follows, we address issues related to operational security policies, personnel security and training protocols.

[redacted]

[redacted]

- [redacted]
- [redacted]
- [redacted]
- [redacted]
- [redacted]
- [redacted]

[redacted]

[redacted]

[redacted]

[redacted]

[redacted]

[redacted]

[redacted]

[redacted]

Transactional Security

All transactions that include cannabis or payments shall follow strict protocol to ensure safety and accountability.

- Every sale or transport must be recorded on a sales invoice or receipt.
- Sales invoices and receipts may be maintained electronically and must be filed in such manner as to be readily accessible for examination and shall not be commingled with invoices covering other commodities.
- Each sales invoice shall include the name and address of the seller as well as the following information:
    - Name and address of the purchaser.
    - Date of sale and invoice number.
    - Kind, quantity, size, and volume of cannabis products sold.
    - The cost to the purchaser, together with any discount applied to the price as shown on the invoice.
    - The place from which transport of the cannabis product was made unless transport was made from the premises of the licensee.
    - Any other information specified by the licensing authority.

[redacted]

[redacted]

- [redacted]
- [redacted]
- [redacted]

[redacted]

[redacted]

- [redacted]

[redacted]

[redacted]

[redacted]

[redacted]

[redacted]

[redacted]

[redacted]

[redacted]

[redacted]

[redacted]

[redacted]

[redacted]

[redacted]

[redacted]

[redacted]

[redacted]

[redacted]

[redacted]

- [redacted]
- [redacted]
- [redacted]
- [redacted]

[redacted]

[redacted]

[redacted]

Background checks

Background checks will be performed on all employees, volunteers, principals, directors, and board members. Background checks are also required for any contractors or vendors who regularly work within the facility or who will be employed there for an extended time. Copies of any public records obtained through the background check process will be provided to the individual concerned. To ensure transparency, a third party will conduct the entire background checking process. Unless required to do so by law, we will not refuse to hire an individual solely because of minor cannabis-related offenses.

Training and Drills

All on-site personnel shall undertake mandatory training on incident management, emergency response, and on site behavior. [redacted]

[redacted]

[redacted]

[redacted]

[redacted]

To Agenda

[redacted]

Fire Prevention & Safety Plan (4C)

Overview

The purpose of our Fire Prevention and Safety Plan is to prevent a fire from occurring in a workplace. It describes the fuel sources (hazardous or other materials) on site that could initiate or contribute both to the spread of a fire, as well as the building systems, such as fixed fire extinguishing systems and alarm systems, in place to control the ignition or spread of a fire. State regulations require that all licensed cannabis businesses ensure that their operations do not pose an unreasonable risk of fire or combustion.

The Fire Prevention & Safety Plan covers the following:

Employee Fire Prevention Training and Regular Drills

In addition to training and periodic drills covered in the personnel training and drills section of the Operations Security Plan, all employees shall receive reference material, written in plain English and presented in an easy-to-use outline format, explaining all operational, safety, and security policies and protocols. [redacted]

[redacted]

Thrive Society will update this training program if required to meet state or local requirements. Other protocols include:

- A strict no smoking policy in facility or within 50 feet of the building.
- Smoke Alarms located in all areas of the facility that is required by state
- Fixed Extinguisher Systems are located throughout the building as well
- Employees will know how to engage internal Alarm Systems
- Portable Fire Extinguishers located in all areas of the facility that is required by state

Hazardous Materials

Employees will have a full understanding of a Material Safety Data Sheets (MSDS) involved in all processes. (protocol on MSDS sheets in Storing hazardous materials section of the facility security plan) Potentially flammable materials such as alcohol-based or ethanol-based tinctures will be properly store in fireproof storage areas.

Hazardous Material Storage

All hazardous materials will be stored in locked storage areas designated solely for this purpose. All such areas will be spark proof with proper ventilation systems to ensure safe handling of any potential leaks or build-up of gas. We will maintain these areas so as to pose no threat of safety or quality to the facility, product, or employees. The temperature and humidity of the storage spaces shall be maintained at an appropriate level for the contents, and shall be monitored to ensure ranges are always within acceptable limits. All storage areas will be restricted to logged and identified products. A documented logging system will ensure all materials are accounted for and properly stored in designated areas. Thrive Society will ensure periodic inspections, at least monthly, to ensure all materials are properly stored. All such inspections shall be documented. All records pertaining to hazardous materials shall be maintained for at least five years.
A separate designated area constructed to the same requirements will hold any rejected hazardous materials to ensure there will be no cross contamination or misuse.

ORIGINAL

REDACTION JUSTIFICATION INSERT
(To be inserted for every instance of redaction)

RRG-Mnv.Cp.Df.-140

Nevada City Medical Cannabis Business Name: Thrive Society

The following page(s): TSL-M.nv.C.p.D.f-107 - TSL-M.nv.C.p.D.f-127
<insert unique page identifier, or identifier range>

has (have) been redacted or withheld from public disclosure, as determined by

Basil McMahon, Vice-President, Thrive Society
<insert name, professional title, affiliation with applicant>

because the information contained therein is exempt from disclosure under the following Government Code provisions:

Mark with "X" where applicable	Government Code provision:	Examples of information that may be withheld pursuant to each government code section:
_____	Section 6254, subd. (c)	Personal, medical, or similar files, the disclosure of which would constitute an unwarranted invasion of privacy
_____	Section 6254, subd. (f)	Investigatory or security files compiled by a local agency for licensing purposes
_____	Section 6254, subd. (n)	Licensee's personal financial data
_____	Section 6255, subd. (a)	Personal contact information (business contacts should not be redacted)
_____	Section 6254	General public interest exemption (provide explanation below)
_____	Other	(Provide explanation below)

Explanation for redaction:

_____

_____

_____

******Please note that if objection is made for the redactions on a public document request, you may be called upon to more thoroughly justify the reason for redaction. Any costs incurred by the city attorney to determine whether items marked for redaction are in compliance with Government Code Sections 6254 and 6255 may be passed on to the applicant.******

Each storage room shall be maintained with the materials safety data sheets (MSDS) appropriate to the contents of the room. All employees shall be trained for competency on how to read and understand these documents, which detail:

- Name of chemical
- Manufacturer's information
- Hazardous ingredients/identity information·
- Physical/chemical characteristics
- Fire and explosion hazard data
- Reactivity data
- Health hazard data
- Precautions for safe handling and use
- Control measures

Hazardous Material Control

Thrive Society distribution expects to store isopropyl alcohol and/or similar products such as Alconox or other resin removers for the purposes of cleaning and disinfecting surfaces such glass, metal, stainless steel, porcelain, ceramic, plastic, rubber and fiberglass.

a. Cleaning products are expected to be stored separately from any cannabis products, and only used after all cannabis has been placed in appropriate storage facilities separate from packaging and labeling workspaces to avoid contamination. Excessive quantities of potentially hazardous cleaning products will not be kept on site.

Chemical clean up

Each employee involved in any chemical process will be specifically trained on handling practices, as well as required responses in the event of a spill or mishap. A designated supervisor will be responsible for ensuring any chemical cleanup follows protocol, and recording all steps taken. A log of any cleanup, scheduled or unscheduled, is kept at all times on record. The chemical cleanup procedure includes:

- Use of hazard grade Personal Protection Equipment according to the specific requirements of the hazardous material including:
    - Rubber gloves
    - Rubber boots
    - Glasses or eye protectant
    - Ear protectant
    - Apron or skin protector

- Air filter face mask, chemical spill UL grade filter
- Proper wash and storage are of PPE materials

Disposal of all chemical and cleanup material will be conducted in compliance with materials safety data sheets and local and state regulations. Chemical bins and storage will be separate from all other material and handled accordingly.

Fire Suppression

Our building is equipped with internal sprinklers for fire suppression and prevention. The building is also equipped with an internal intercom system so fire danger may be communicated quickly and efficiently. Our entire facility will be equipped with smoke alarms and fire extinguishers on hand. We will also utilize a Fike's FAAST, an early warning fire detection featuring the latest in Fire Alarm Aspiration Sensing Technology. This technology uses an advanced, intelligent smoke detector that actively draws air into its sensor through a pipe network. FAAST combines dual source blue LED and infrared laser optical smoke detection with advanced algorithms to detect a wide range of fires while maintaining enhanced immunity to nuisance particulates. This enables FAAST to deliver highly accurate and discreet early warning fire detection for a our facility.

Occupational Health and Safety

Employer Responsibilities

Under the OSHA law, employers have a responsibility to provide a safe workplace. This is a short summary of key employer responsibilities:

- Provide a workplace free from serious recognized hazards and comply with standards, rules and regulations issued under the OSH Act.
- Examine workplace conditions to make sure they conform to applicable OSHA standards.
- Make sure employees have and use safe tools and equipment and properly maintain this equipment.
- Use color codes, posters, labels or signs to warn employees of potential hazards.
- Establish or update operating procedures and communicate them so that employees follow safety and health requirements.
- Employers must provide safety training in a language and vocabulary workers can understand.
- Employers with hazardous chemicals in the workplace must develop and implement a written hazard communication program and train employees on the hazards they are exposed to and proper precautions (and a copy of safety data sheets must be readily available)

- Provide medical examinations and training when required by OSHA standards.
- Post, at a prominent location within the workplace, the OSHA poster (or the state-plan equivalent) informing employees of their rights and responsibilities.

Employee Safety and Hygiene

Thrive Society LLC will outline a summary of all the safety protocols that will be adopted related to staff training, protective clothing and equipment, hazardous material handling, emergency communication/response, etc. Thrive Society will conform to all California OSHA workplace safety standards, specifically Title 8 of the California Code of Regulations.

In order to prevent contamination of cannabis or cannabis products, Employees handling cannabis products will be required to follow safety and hygiene protocols that include, but are not limited to, hand washing, use of facemasks/gloves, prohibiting employees who are showing signs of illness, open wounds, sores or skin infections from handling cannabis.

Emergency Response Plan

[redacted]

[redacted]

[redacted]

[redacted]

[redacted]

Site and Facility Plans and Information

We have compiled a site-plan and plans for each floor of each building. Our plans show:

- Layout of access roads, parking areas, buildings on the property, building entrances
- Locations of emergency equipment and the locations of controls for building utility and protection systems.
- Instructions for operating all systems and equipment will be accessible to emergency responders.
- We will provide a copy of the plan to the public emergency services that would respond to our facility with responsibility for building management and security.

Evacuation Plan

[redacted]

[redacted]

[redacted]

[redacted]

Incident Management and Emergency Response

[redacted]

Proactive Engagement with Emergency Services and Law Enforcement

Our Security Team will develop and maintain appropriate lines of communication and ensure appropriate authorities are aware of substantive changes in security procedures.

[redacted]

[redacted]

Updating and Annual Review

[redacted]

ORIGINAL

REDACTION JUSTIFICATION INSERT
(To be inserted for every instance of redaction)

RRG-Mnv.Cp.Df.-148

Nevada City Medical Cannabis Business Name: Thrive Society

The following page(s): TSL-M.nv.C.p.D.f-130 - TSL-M.nv.C.p.D.f-134
<insert unique page identifier, or identifier range>

has (have) been redacted or withheld from public disclosure, as determined by

Basil McMahon, Vice-President, Thrive Society
<insert name, professional title, affiliation with applicant>

because the information contained therein is exempt from disclosure under the following Government Code provisions:

Mark with "X" where applicable	Government Code provision:	Examples of information that may be withheld pursuant to each government code section:
_____	Section 6254, subd. (c)	Personal, medical, or similar files, the disclosure of which would constitute an unwarranted invasion of privacy
_____	Section 6254, subd. (f)	Investigatory or security files compiled by a local agency for licensing purposes
_____	Section 6254, subd. (n)	Licensee's personal financial data
_____	Section 6255, subd. (a)	Personal contact information (business contacts should not be redacted)
_____	Section 6254	General public interest exemption (provide explanation below)
_____	Other	(Provide explanation below)

Explanation for redaction:

_____

_____

_____

******Please note that if objection is made for the redactions on a public document request, you may be called upon to more thoroughly justify the reason for redaction. Any costs incurred by the city attorney to determine whether items marked for redaction are in compliance with Government Code Sections 6254 and 6255 may be passed on to the applicant.******

5. Community Benefits

Thrive Society is a company founded on the belief that our success is built upon the investments we make in our community. Our values inspire us to work towards creating well-integrated cannabis industry that gives back to the community and preserves the quality of life in Nevada City that we all hold dear.

Our Community Outreach Program aims to promote habits of healthy, sustainable living in the community, and a high standard of environmental practices amongst our regional network of suppliers. We hope that with time, humility, and dedication, we may engender support amongst skeptics and demonstrate a consistent commitment to improving the standards of living for the little town that we love so much.

Thrive Society anticipates engaging with the following organizations in Nevada County:

Environmental

SYRCL

SYRCL is the first Waterkeeper established in the Sierra Nevada and serves as the official Yuba River Waterkeeper. The program is dedicated to fostering regional and statewide coalitions to address complex issues related to water quality and watershed health including the restoration of wild salmon. Thrive Society is very sensitive to responsible water usage; the cultivation of cannabis, like other crops, can contribute to the depletion of surface and ground water resources, especially when it is unregulated. Preservation of the Yuba and Bear river watersheds are of particular importance.

Thrive Society looks to donate to SYRCL in several ways. With an annual contribution, we will join the Emerald Circle, a group of passionate SYRCL members who have dedicated an annual leadership gift to help build and sustain core activities like river science and restoration, advocacy, and environmental education for all ages. Our team also plans to continue to volunteer for the Annual Yuba River Cleanup, which takes place at 30+ sites in the Bear & Yuba watersheds and removes trash and recyclables from 86.35 miles of river, creek and lake shoreline.

Sierra Harvest

Sierra Harvest provides nutrition education to over 9000 children annually, supports established farmers and builds markets for local food, and teaches people the joy of learning how to become self sufficient and healthier by growing their own food.

Thrive Society will join their Seed Circle and commit to a yearly contribution for 5 years. Our donation will provide 5 children with scholarships to the Food Love Summer Camp, support the Nevada County food policy council for 6 months, cooking classes for 60 Sierra Gardens scholarship recipients, sends 300 students on a farm field trip, and support Harvest of the month tastings for 2000 students.

Health

Caladrius Network

Caladrius Network's mission is to provide educational support services and cannabis based medicines to families of catastrophically ill children at no cost, ever. This local organization has been a tireless advocate for afflicted children and has worked to build community support for non-remunerated cannabis gardens in Nevada County. Thrive Society has been in communication with the Caladrius Network about how we can support their mandate, through donations, donation of services in-kind, and/or volunteer time.

Homelessness

Hospitality House

Hospitality House is a nonprofit community shelter for the Homeless in Nevada County, funded primarily by individual donations. The year-round shelter is a no tolerance safe haven; those seeking shelter are offered three meals, along with laundry and shower facilities. Hospitality House is committed to ending homelessness by providing intensive case management services to all its guests.

Thrive Society will stand behind the important work this organization is doing to create a healthy community for all. We plan to get involved with the nonprofit in several ways. First, our team will volunteer to set up and run 2 yearly events: The Empty Bowl and The Night of Giving. By showing up and physically supporting their activities, we hope to establish strong bonds and show solidarity. In addition, we will donate a 4-hr block of our organization's time each quarter to volunteer at the organization's thrift store, Bread and Roses. As a group, we will go through all the donations, steam, tag and hang clothing that will in turn be sold to support the organization at large.

Harm Reduction

CoRR Foundation

Community Recovery Resources serves our community with a full spectrum of wellness-focused programs to reduce the social, health and economic impact on families and children from all types of substance abuse and behavioral health issues. We recognize that cannabis brings a lot of medical benefits, but that it also can contribute to social ills- for example, youth access and diversion. Nevada County is fortunate to have organizations like CoRR supporting individuals and families in our community who are in recovery. Thrive Society would like to plan a monthly donation to the organization, based on our net revenues, as a gesture of support to an organization that helps foster empowerment and transformation in the lives of locals creating healthy new life habits for themselves and their families.

Center of the Arts

Center of the Arts is a non profit organization. Sixty percent of their revenue comes from ticket sales and venue rentals, the rest comes from individual and business support through membership, donations and sponsorships. Thrive Society's management team all come from dance and art backgrounds, and we feel passionate about continuing the rich art culture in our County. We commit to a monthly donation for this center, to assist in continuing their programs and events.

Sierra Commons

Sierra Commons is where Nevada County entrepreneurs come together to get work done. Sierra Commons helps businesses grow. Offering coworking, educational programs and mentorship, it is a campus where entrepreneurs come together to learn and thrive. Along with participating in courses and consultation, Danielle Dao is a monthly member and will continue to donate and support this supportive business network.

Nevada City Sustainability Team

The vision of this organization is to create a vision for a community that values environmental quality, social equity, and economic vitality, and to develop strategies for its implementation, long-term management and economic viability. Thrive Society resonates and is aligned with all of the environmental, community, and economic objectives of this team. We hope to support possible future projects towards fruition when projects come along that align with Nevada City's Sustainability Vision.

6. Enhanced Product Safety

California's new cannabis regulatory framework assigns the responsibility of product safety to the distributor. Consistent with the regulatory framework outlined in the MAUCRSA, Thrive Society will procure legal medical cannabis products from licensed medical cannabis producers, ensuring the contents are safe for consumption and meet strict testing criteria established by the state.

Our day-to-day operations include verifying that legal medical cannabis products are packaged suitably and in compliance with regulations, remitting taxes as they are assessed, and facilitating the insured and bonded secure transportation of cannabis goods to legal medical cannabis retailers throughout California. Thrive Society will build the supply-chain infrastructure for safe, secure, and affordable distribution of legal medical cannabis, operate in continuous compliance with state and local regulations, and take proactive measures to mitigate impacts to community, and the environment.

As a distributor, we are entrusted with ensuring the integrity of the testing is maintained, arrange for an independent licensed testing laboratory to select a random sample, transport it to a laboratory, and test the product.

Procurement

Our Director of Purchasing will work hand-in-hand with suppliers to source the highest quality medicine for our retailers. These close business relationships with farmers, manufacturers and product makers will allow us to maintain accurate records and production schedules so we can get product to market in a timely manner, while maintaining the highest quality control management practices.

The procurement and transit of products to our facility will be conducted in accordance with all applicable state regulations. These protocols are detailed in our Transportation and Security Plans. All cannabis products distributed through Thrive Society will be sourced from California state and local licensed cultivation and manufacturing facilities. All cannabis flower, edibles, concentrates and ancillary products such as tinctures and salves will be tested and approved by a state licensed cannabis testing facility under contract with Thrive Society. All cannabis infused products will be sourced from manufacturers whose products are regularly tested for compliance with state and local requirements.

Thrive Society is committed to ethical business practices and will not source or distribute any product that is in violation of any state or local laws. All of our inventory will come from legal sources within the state of California.

Good Manufacturing Practices

A Good Manufacturing Practices (GMP) certification program provides independent verification and certification that the basic manufacturing practices and prerequisites necessary for the implementation of an effective Hazard Analysis Critical Control Point (HACCP) food safety program are being followed. Compliance with GMP requirements entails minimum common sense sanitary and processing requirements applicable to all food processing (and similar) establishments. Thrive Lab will engage in a certification program for the development of a comprehensive set of SOPs and the design of the facility to meet GMP certification standards.

Thrive Lab will take all necessary precautions to protect against allergen cross-contact and against contamination of cannabis products, cannabis product-contact surfaces, or cannabis product-packaging materials by microorganisms or foreign substances (including perspiration, hair, cosmetics, tobacco, chemicals, and skin-surface medications).

Our product charting protocols will include:

- Name and intended cannabinoid(s) concentration per serving of the cannabis product to be manufactured and the strength, concentration, weight, or measure of each ingredient for each batch size
- A complete list of components to be used, accurate statement of the weight or measure of each component to be used
- Identity and weight or measure of each ingredient that will be declared on the ingredients list of the cannabis product
- The theoretical yield of a manufactured cannabis product expected at each point, step, or stage of the manufacturing process where control is needed to ensure the quality of the cannabis product
- The expected yield of the finished product.

Quality Control Testing

To achieve its mission of distributing only products that are safe and trusted Thrive Society will partner with Pure Analytics, California's most trusted cannabis testing laboratory. As our partner in safety and accurate cannabis analytics, Pure Analytics provides fast, affordable cannabis potency testing and safety screening to the medicinal cannabis community with lab-validated results. Located in Sonoma County CA, Pure

Analytics has extensive experience supporting the needs of cultivators, manufacturers, dispensaries and small batch producers.

Our partnership will ensure the following:

- Standards for purity, integrity and potency
- Preparation of product for testing, video verification
- According to state regulations all cannabis products must go through quality assurance, inspection and testing for the following items:
    - Tetrahydrocannabinol (THC)
    - Tetrahydrocannabinolic Acid (THCA)
    - Cannabidiol (CBD)
    - Cannabidiolic Acid (CBDA)
    - The terpenes required by the bureau in regulation
    - Cannabigerol (CBG).
    - Cannabinol (CBN)
    - Any other compounds or contaminants required by the bureau.
    - Pesticides, That the presence of contaminants does not exceed the levels established by the bureau.
    - Mold Spores
    - Microbiological Impurities identified by the bureau

After taking physical possession of a cannabis batch, a distributor will contact the licensed testing laboratory to arrange for testing, unless Thrive Society plans to sell the batch to another distributor. The laboratory agent will come to our licensed premises to take a sample. The sample selection will be recorded on video, and both the distributor and the laboratory agent must witness and attest to the sample selection. After the sample has been tested, the testing laboratory will provide the distributor with a certificate of analysis. If a sample passes testing, the distributor may then transport the cannabis goods to one or more retailers for sale. If a harvest batch fails testing, it can be remediated for use in a manufactured product, if doing so would not result in harm to consumers. The distributor will complete several quality assurance steps before distributing the batch for sale. The distributor must check that the certificate of analysis corresponds to the batch tested; the label is accurate; the packaging meets required standards; and the proper information is in the state's track-and-trace database.

A process flow chart, within our software, will identify each step in the distribution process so that each link on the distribution chain can be easily identified, tracked and analyzed, thus ensuring the highest quality for consumer safety and compliance with all state and local regulations. The process flow chart will identify critical areas such as

holding times, temperature controls, process regimens, coding thresholds, testing results and rejection processes.

The quality of our products will be a big factor in our branding and marketing, so maintaining testing and quality assurance protocol is part of our fiduciary duty. Our product line will consist of a hand-selected menu of popular strains of flowers grown ecologically by local and independent permitted cultivators and manufactured products produced internally and by licensed artisans in the community. Our goods will have a range from top shelf award winning brands that are custom strains to common everyday strains for our lower quality varietals for those on a budget.

Standards for purity, integrity and potency

Facility packaging employees that have received the proper training will be responsible for identifying all use-able and non-usable plant parts and matter. Useable by-product plant matter created during the packaging phase of processing will be inspected, logged, and if appropriate, packaged into cannabis prerolls. All unusable plant matter, such as sticks and stems, will be disposed of properly and in accordance with our SOPs. Disposal procedures are described in the waste management plan.

Facility packaging employees will provide a qualitative description of each batch of raw plant matter or dried cannabis flower that includes:

- Batch size by weight
- Name of the plant cultivar
- Description of initial quality of plant matter
- An organoleptic review
- Batch number
- UID
- Cannabinoid profile

Each batch of cannabis flower container packaged on-site at the facility will be monitored throughout each stage of processing and packaging.

Standards for cleanliness

Facility Hygiene

There are hygiene considerations throughout our plan, and will be a consideration in the development of all SOPs. Some of the specific hygiene considerations Thrive Society will address in our policies and procedures include:

- The water we use for washing, rinsing cannabis or cannabis ingredients will be be safe and of adequate sanitary quality, as well as any ice that is used in processes.
- Raw materials and other ingredients will not contain levels of microorganisms that render the cannabis product injurious to human health, and will be pasteurized if applicable.
- Raw materials and other ingredients susceptible to contamination with aflatoxin or other natural toxins pests, or extraneous material shall not exceed generally acceptable limits set by the U.S. Food and Drug Administration for aflatoxins, other natural toxins, pest contamination, undesirable microorganisms, or extraneous materials.
- Frozen raw materials and other ingredients shall be kept frozen. If thawing is required prior to use, it shall be done in a manner that prevents the raw materials and other ingredients from becoming adulterated.
- Raw materials and other ingredients that are food allergens shall be identified and held in a manner that prevents cross contact with other raw materials or ingredients.
- Steps such as washing, peeling, cutting, sorting and inspecting, mashing, shredding, decarboxylating, drying, and heat blanching shall be effected by heating the cannabis product to the required temperature, holding that temperature for the required amount of time, and then either rapidly cooling the cannabis product or passing it to subsequent manufacturing process without delay. Growth and contamination by thermophilic microorganisms in blanchers shall be minimized by the use of adequate operating temperatures and by periodic cleaning and sanitization as necessary.
- Equipment, containers, and utensils used to convey, hold, or store raw materials and other ingredients, work in process, or other cannabis products shall be constructed, handled, and maintained during manufacturing, processing, packing, and holding in a manner that protects against allergen cross contact and contamination.
- Measures such as sterilizing, irradiating, pasteurizing, cooking, freezing refrigerating, controlling pH, or controlling water activity that are undertaken to destroy or prevent the growth of undesirable microorganisms shall be adequate

under the conditions of manufacture, handling, and transfer to prevent the cannabis product from being adulterated.

Personal hygiene

As a medical cannabis facility, Thrive Society commits to ensuring our employees share the vision of a cannabis business that places patient health and safety first. Thrive Society employees will be trained to report to their direct supervisor any personal health condition that might compromise the cleanliness or quality of the medical cannabis the employee might handle.

Our cleanliness and hygiene policies include:

- A Personal Health, Hygiene, and Cleanliness handout in the employee handbook will describe all of the symptoms and health conditions that may compromise the cleanliness or quality of any medical cannabis handled by an employee.
- Before beginning employment, each employee will be asked to sign a document that acknowledges that the individual has read, and is aware of, the conditions described in the Personal Health, Hygiene, and Cleanliness document.
- The Thrive Society employee handbook will include a stipulation for employees allowing them to call in sick without penalty. This will prevent any contamination from reaching any finished medical cannabis product.
- During cold and flu season, or when contagious sickness seems frequent in the community, supervisors will be particularly diligent about meeting with and evaluating the health of each employee before he or she begins working directly with medical cannabis.
- Employees will be trained to report any fellow employee that is demonstrating any of the symptoms or conditions identified in the Personal Health, Hygiene, and Cleanliness handout directly to the shift supervisor.
- Employees will have access to emergency contact information for all local and state emergency service providers.
- Employees demonstrating the symptoms for certain illnesses will be required to seek medical attention and will not be allowed to return to work without documentation from a physician indicating that the individual has been cleared to return to work.
- Standard operating procedures will be made available in digital and print forms, and will be included in employee handbook/training manual.

Sanitation and handling protocols

To maintain the integrity of all cannabis concentrates produced at the facility, Thrive Society and its partner company Thrive Society will provide sanitization and clean-room preparation training to all processing and manufacturing employees. Employees will maintain and follow standard cleaning procedures for all buildings and equipment used to store medical cannabis. The Director of Manufacturing will ensure all employees involved are trained to properly clean assigned equipment and document the process. In compliance with regulatory and GMP requirements, one or more trained supervisors will be assigned to supervise overall sanitation.

The Director of Manufacturing will assign specific personnel for the cleaning of all production equipment and oversee the proper performance of cleaning and sanitation standard operating procedures. Standard operating procedures will address the cleaning of equipment, including utensils, used in the manufacture, processing, packing or holding of all products. These written procedures, schedules, and logbooks will include:

- Assignment of responsibility for cleaning equipment
- Controlling airborne contamination
- Using sanitary handling procedures
- Using safe water in all operations
- Performing chemical, microbiological, or other testing, as necessary to prevent the use of contaminated ingredients in processing operations
- Storing packaging materials, in-process medical cannabis raw material, and medical cannabis finished products appropriately to prevent contamination and adulteration
- Preventing cross-contamination and mix-ups between contaminated or adulterated medical cannabis raw material or medical cannabis finished products and non-tainted medical cannabis
- Washing or cleaning containers and packaging components that contain contaminants
- Using effective measures to protect cannabis products against adulteration by other foreign materials when at risk due to processing equipment or instruments
- A description in sufficient detail of the methods and materials used for cleaning and the methods of disassembling and reassembling equipment to ensure proper cleaning
- Measures for the protection of clean equipment from contamination prior to use
- Required inspection of equipment for cleanliness immediately before use

Based upon the individual equipment design, the following sequence of cleaning operations will be performed upon the completion of each batch of product:

- If applicable, a reduced disassemble and cleaning procedure may be utilized between sequential batches of the identical product brand, strength, and dosage form
- Upon the completion of a manufacturing or packaging operation, equipment will be disassembled and all moveable parts removed so that the equipment can be properly cleaned
- All exterior surfaces will be sanitized and the interior cleaned with an approved detergent mixed with water and then rinsed thoroughly with tap water
- Finally, all surfaces that come in contact with components will be sanitized with denatured alcohol and allowed to air dry
- Upon completion, the employee will fill in the cleaning log and inform their immediate supervisor the equipment is ready for inspection

An audit or check will be performed on the equipment cleaning and its documentation on a random basis several times a week. These reviews will include an inspection of the actual equipment cleanliness and the accuracy of all cleaning documentation. All cleaning records required by this procedure will be retained for at least five (5) years after distribution of the last batch of product manufactured, processed or packaged utilizing that equipment.

When developing the above protocols, the Director of Manufacturing will also incorporate the following elements:

- Defining responsibility and frequency for cleaning and disinfecting each piece of equipment or item that comes in contact with medical cannabis
- Monitoring compliance
- Training employees to ensure they are able at all times to answer the question "How do you know that this item has been cleaned and/or disinfected?"
- Cleaned/disinfected items should be labeled (date/time)

All areas will maintain a general cleanliness and go through routine maintenance. The facility will be of food production quality at all times, with frequent inspections and internal audits to ensure safety in production. Sanitation units or wash stations should be utilized throughout the facility where they are placed. Employees are encouraged to wash frequently and always between handling products.

Washroom Facilities

Restrooms and toilets will be located separately from all production and manufacturing areas. Restrooms will have a self-closing door and be enclosed with proper, individual

ventilation unit. Wash hands signs will be placed above all sinks. Training on best practices will be given annually and documented. Restrooms will be cleaned daily and maintained in a clean manner.

Equipment sanitation

In general, surfaces and equipment within the processing and manufacturing facility would be classified by the CDC guidelines under Spaulding's Classification as Non-Critical (i.e., items that might come in contact with intact skin, but not mucous membranes or non-intact skin) and in general most are environmental surfaces, which must be regularly disinfected to a low level.

Cleaning protocols will include limits on how long reusable cleaning clothes and mop heads can be used before laundering, and on how frequently the water disinfectant mixture (using an appropriate and approved disinfectant, with preference for naturally-based options) is changed (at a minimum per every three rooms). The facility will have single-use disposable towels impregnated with a disinfectant (such as Clorox wipes) for spot cleaning as necessary during the day. All employees will be trained on these duties and procedures and cleaning procedures will be carefully overseen at the beginning and end of each business day.

In addition, for all surfaces, equipment, or materials that will touch medical cannabis or individually packaged containers of medical cannabis, the Director of Manufacturing will develop and oversee the implementation of more rigorous cleaning protocols. These will be to the standard required by the CDC guidelines for Spaulding's Classification of Critical, because medical cannabis can come into contact with mucous membranes. These items require either sterilization or a cleaning process followed by high-level disinfection. Additional handling protocols will meet or exceed California requirements for safe and sanitary food handling and packaging.

Contamination Prevention

In order to maintain the medical cannabis free of contamination, employees will be required to comply with standard operating procedures. All employees will be trained to ensure absolute sanitary conditions in areas that have been designated for packaging and handling, including all equipment, utensils, and accessories used during the packaging process. Our sanitation standard operating procedures have been designed to meet or exceed the high sanitary standards of the California state regulations pertaining to the handling of food-grade products:

- All agents involved with the handling, manufacturing and packaging of medical cannabis will wear proper lab coats, latex gloves, and hairnets.

- Personnel will also be required to wash hands and exposed areas of the arm before beginning work, before and between glove use, and after using a toilet facility.
- Gloves will be replaced after each pound of medical cannabis has been packaged, or, when beginning to package a different variety or shipment of product (to prevent cross-contamination), and additionally every two-hours.
- Prior to entering the packaging room, employees must report to the shift supervisor any illness or personal health condition that might compromise the cleanliness or quality of the medical cannabis the Processing Agent might handle.
- Maintain a sanitation log with records retained for five years.

Packaging and Labeling

Thrive Society will comply with all local and state regulations regarding the proper labeling and packaging of cannabis and cannabis cannabis products. All products must properly carry warning labels as required by state regulations. SOPs will cover all of the following:

- Packaging, repackaging, labeling and relabeling of non-manufactured medical cannabis (flower & standard pre-rolls) on behalf of our own brands, or a cultivator or another distributor, or while holding title.
- Holding another licensee or non-licensee packaging and labelling materials in our distribution premises.
- Being responsible for compliance with applicable medical cannabis handling, packaging and labeling laws including but not limited to Business and Professions Code section 19347 and Division 8, Title 3 of the California Code of Regulations.

Packages containing cannabis products will include the following:

- The net weight of cannabis in the package.
- Identification of the source and date of cultivation, the type of cannabis or cannabis product and the date of manufacturing and packaging.
- The appellation of origin, if any.
- List of pharmacologically active ingredients, including, but not limited to, tetrahydrocannabinol (THC), cannabidiol (CBD), and other cannabinoid content, the THC and other cannabinoid amount in milligrams per serving, servings per package, and the THC and other cannabinoid amount in milligrams for the package total.
- A warning if nuts or other known allergens are used.
- Information associated with the unique identifier issued by the Department of Food and Agriculture.

- For a medicinal cannabis product sold at a retailer, the following statement will appear in bold: For flowers: "GOVERNMENT WARNING: THIS PACKAGE CONTAINS CANNABIS, A SCHEDULE I CONTROLLED SUBSTANCE. KEEP OUT OF REACH OF CHILDREN AND ANIMALS. CANNABIS MAY ONLY BE POSSESSED OR CONSUMED BY PERSONS 21 YEARS OF AGE OR OLDER UNLESS THE PERSON IS A QUALIFIED PATIENT. CANNABIS USE WHILE PREGNANT OR BREASTFEEDING MAY BE HARMFUL. CONSUMPTION OF CANNABIS IMPAIRS YOUR ABILITY TO DRIVE AND OPERATE MACHINERY. PLEASE USE EXTREME CAUTION."

Cannabis products will be labeled and placed in resealable, tamper-evident, child-resistant package and include a unique identifier for the purposes of identifying and tracking cannabis and cannabis products. We will utilize the child resistant packaging made by Pollen Gear. Our packaging plan includes packaging that implements:

- ASTM-certified, childproof lids to protect minors
- Standup Pouches' flexible child proof bags that are certified compliant with the ASTM International D3475 standards
- Thick wall glass jars with symmetric child-resistant closures
- Child-Resistant Pre-Roll Tubes
- Child Resistant Barrier bags
- Shrink Wrapped seals on most packages
- Significantly difficult for children under 5 years of age to open
- Additional exterior exit packaging for internal containers
- For more information about Sustainability in Packaging, See *Section 7: Environmental Benefits*.

In addition, cannabis products will be packaged and labeled in a way that is not attractive to children and in accordance with all state laws. We will comply with any other requirement set by the Bureau or the Department of Public Health.

In the event the federal government determines that cannabis is no longer a Schedule I controlled substance under federal law, the label prescribed in the regulations shall no longer require a statement that cannabis is a Schedule I controlled substance.

Transportation

If and when Thrive Society avails of the services of a licensed cannabis transporters, they shall ensure that all medical cannabis batches are stored separately and distinctly from other medical cannabis batches on the transporter's vehicles, and in a manner that preserves the quality of the product, including but not limited to:

- Proper labeling
- A transporter shall store medical cannabis goods in a manner designed to permit control of temperature and humidity and that prevents the entry of environmental contaminants such as smoke and dust. Medical cannabis goods are stored shall not be exposed to direct sunlight.
- A transporter shall store harvest batches and edible cannabis products that require refrigeration at 35 to 42 degrees Fahrenheit. In addition, a transporter shall store harvest batches in a darkened area with no more than 60% humidity.

Product Complaints

From time to time, a complaint about a product produced in the facility may arise. Thrive lab will establish and implement written procedures to ensure that qualified personnel will review and investigate all complaints to determine whether a complaint involves a possible failure of a cannabis product to meet any of the specifications established in internal protocols or state regulations. Qualified personnel will review and approve of decisions determining whether to investigate a product complaint, report on the findings, and document any follow up actions taken by the investigation. Written records shall be kept of any verified complaint and investigation that will include:

- Name and subscription of the product in question
- Batch number and/or UID of the cannabis product
- Date of complaint and name, address, and/or contact number of the compaintant, if applicable
- The nature of the complaint and method of consumption/ingestion
- The reply to the complainant, if any
- Findings of the investigations and/or any follow-up actions taken

Product Recall

Procedures for the recall of cannabis products manufactured by Thrive Labs will be established and implemented whenever a product is misbranded, adulterated, or a recall is otherwise determined to be necessary. The procedures will include Criteria for evaluating the necessity of a recall, Designated personnel responsible for implementing the Recall Procedure, and Notification protocols, including:

- A method of notifying all customers who have, or could have, been affected
- A method of notifying and licensed cannabis businesses that supplied or recieved the recalled product
- Instructions to the general public and other licensees for the return and/or destruction of the recalled product

Disposal of the product shall be conducted, after the requisite quarantine period, as set forth in Article 4, Section 40268 (*Recalls*) of the *Manufactured Cannabis Safety Regulations*. The Department of Manufactured Cannabis will be informed within 24 hours of any recall notice issued.

7. Environmental Benefits

Thrive Society takes environmental stewardship seriously. Climate change is reaching every corner of the globe and being part of the solution is imperative to our economy, our food supply, water supply, livelihoods and our planet. As an environmentally responsible organization, we will implement an Environmental Plan that reduces energy consumption, conserves water and strives to eliminate waste from our operations.

Thrive Society will serve as an active environmental steward within the Nevada City community. We welcome the opportunity to support Nevada City's Energy Action Plan (EAP) objective to transition to 100% renewable energy, and the goal of a 28 percent reduction in electricity use by 2020.

In our facility, we will conduct regular audits to bring to life patterns showing how our energy is misspent – whether from equipment in need of tune-up or repair, or "operator errors" like lights left on or thermostats set incorrectly. Energy-efficient light bulbs, automated thermostats and lighting schedules will ensure we are streamlining and minimizing our energy consumption.

Energy and Climate

Measures to maximize energy efficiency and reduce greenhouse gas emissions are the cornerstone of our Environmental Plan, and include:

- **High Performance Equipment:** we have specified Energy Star rated equipment in the facility including controls and energy management systems for HVAC and refrigeration equipment, odor mitigation equipment, surge protectors, appliances and machinery
- **Efficiency Measures:** water-efficient fixtures, programmable thermostat to increase electrical efficiency, use of sustainable and eco-friendly paints in our remodeling plans,
- **Recycling Programs:** Reuse and Recycle programs in our day-to-day operations,
- **Strict sustainable packaging standards:** focusing on recyclable or reusable containers, and biodegradable/ recycled chlorine free paper products, biodegradable and earth friendly materials in our day to day operations such as boxes, paper, soy and vegetable-based ink on labels and packaging.
- **Intelligent Lighting:** low-voltage and LED Control Systems with at least three of the following controls strategies: (Scheduling, Daylighting, Occupant Sensing, Task Tuning, Demand Response)
- **LEED Certified Architects:** we are working with Siteline Architecture for our buildout retrofit

- **Renewable Energy:** Thrive Society will utilize PG&E's Solar Choice and Regional Renewable Choice programs to purchase up to 100% of our electricity from a universal solar program generated within California.
- **A Commitment:** to further our aims toward offsetting our carbon footprint in all of our standards as much as possible.

Terrapass: A Carbon Offset Program

Thrive Society plans to make our business as eco-conscious as possible from the start and over time increase our efficiencies further. Once we are in operation, we can determine a product's carbon footprint, with a carbon footprint calculator, and reduce the footprint where possible within our operations.

For remaining offset emissions, we plan to work with Terrapass, an organization that helps businesses manage their sustainability goals. They help a business project and audit their energy usage. They provide Renewable Energy Certificates (REC) that are created for each megawatt-hour of renewable electricity (wind, solar, etc.) generated and delivered to the power grid. They also offer BEF Water Restoration Certificates (WRC) that provide organizations with an incentive to support projects that implement more efficient water management solutions thereby restoring water to critically-dewatered ecosystems. One WRC is the equivalent of restoring 1,000 gallons of water. Through these measures, Thrive Society aims to become fully carbon neutral by 2020.

Clean Green Certified

We are in the application process to become a Clean Green certified company. Once our facility is built-out, we will proceed with the next steps towards completing the audit. Clean Green launched in 2004 as an answer to the lack of organic standards. Consumers have come to recognize the Clean Green logo and have developed trust for products or farms that are stamped with it and have met all of the requirements of the rigorous program.

Modeled on national and international sustainability, organic and biodynamic program standards, the Clean Green program requires on-site inspections and third-party lab testing. The whole life cycle of the plant is considered, from seed selection to harvesting and processing. Clean Green Certified also goes further than the USDA organic in some areas, requiring every operator to undergo pesticide testing every year, rather than only a small percentage of farms. They have a certification specifically for cannabis packaging/handlers. Whether it be a storefront or a manufacturer, the company audits the processor/handler's ability to keep Clean Green cannabis separate from cannabis grown conventionally.

Sustainability in Packaging

Thrive Society aims to implement sustainable, reusable, and recycled packaging practices where possible. We are currently in communication with eco packaging suppliers, such as Sana, Green Packaging Group, Elevate Packaging, Pollen Gear, and Pure Labels. Our team will utilize compostable, reusable, and/or recyclable packages for our goods whenever feasible, and we commit to continuing our efforts at reducing our carbon footprint as much as possible.

Additional Measures

Thrive Society has identified additional ways in which we can operate with sustainability in mind:

- Partnering with locally sourced, organic suppliers for raw materials in our products
- Consult our local Waste Management group for their expert advice and to help us identify and implement sustainable waste management practices
- Facilitating education and guidance to our farmers and to encourage their participation in 3rd party certification programs like Clean Green. We are part of a greater ecosystem and we hope to have a greater impact on the supply chain.
- Creating standards for the suppliers we partner with and requiring implementation of best management practices in farming, organic agriculture protocols, and water conservation
- Providing education to our suppliers on pesticide free organic farming practices
- Encouraging carpools with our team of employees
- Purchase second hand equipment where possible
- Reducing the amount of paper we use as a company by utilizing technology for accounts, invoices, orders, and communication
- Hiring local companies for supply and services like printing, marketing, technology, plumbing, engineers, security, etc.

8. Labor and Employment Plan

Employee Qualifications and Requirements

Thrive Society has specific qualifications we seek in all employees:

- Resident of California
- 21 years of age or older
- Ability to handle multiple tasks and work well under pressure
- Lift up to 30 pounds
- Knowledge of cannabis and cannabis products
- Knowledge of California cannabis regulations
- Valid State of California MMJ card
- Clean criminal record, no felony convictions. Exceptions will be made for non-violent cannabis convictions that haven't already been expunged by the state, or reduced from felony to misdemeanor.
- Excellent communication, attention to detail, interpersonal and organizational skills
- Active team player
- Active community members

Living Wage

Thrive Society will provide its employees with a Living Wage greater than the minimum wage mandated by the State of California. The current minimum wage in California is $10.50 per hour. Thrive Society will provide its employees significantly higher wages. Our wage scale is shown below:

Overtime

Thrive Society will abide by California law, which requires an employer to pay employees overtime for all hours worked in excess of 40 hours in a workweek. Under California law, an employer is also required to pay employees overtime when they work more than eight hours in a workday or work a seventh consecutive day in a workweek.

Overtime to nonexempt employees will be paid at the rate of one and one-half times the employee's regular rate of pay for all hours worked in excess of eight, and up to and including 12 hours in any workday and for the first eight hours of work on the seventh consecutive day of work in a workweek. An employer is further required to pay double the employee's regular rate of pay for all hours worked in excess of 12 in any workday and for all hours worked in excess of eight on the seventh consecutive day of work in a workweek.

Breaks

As a California employer, we must provide nonexempt employees with a paid 10-minute rest period for each four-hour work period. We are also required to provide a 30-minute meal period if our employees work more than five hours a day. A second meal period of no less than 30 minutes will be provided if the employee's work period is more than 10 hours.

Benefits

Thrive Society will provide our employees the following benefits:

- Temporary disability insurance

ORIGINAL

REDACTION JUSTIFICATION INSERT
(To be inserted for every instance of redaction)

RRG-Mnv.Cp.Df.-170

Nevada City Medical Cannabis Business Name: Thrive Society

The following page(s): TSL-M.nv.C.p.D.f-155
<insert unique page identifier, or identifier range>

has (have) been redacted or withheld from public disclosure, as determined by

Basil McMahon, Vice-President, Thrive Society
<insert name, professional title, affiliation with applicant>

because the information contained therein is exempt from disclosure under the following Government Code provisions:

Mark with "X" where applicable	Government Code provision:	Examples of information that may be withheld pursuant to each government code section:
	Section 6254, subd. (c)	Personal, medical, or similar files, the disclosure of which would constitute an unwarranted invasion of privacy
	Section 6254, subd. (f)	Investigatory or security files compiled by a local agency for licensing purposes
X	Section 6254, subd. (n)	Licensee's personal financial data
	Section 6255, subd. (a)	Personal contact information (business contacts should not be redacted)
	Section 6254	General public interest exemption (provide explanation below)
	Other	(Provide explanation below)

Explanation for redaction:

******Please note that if objection is made for the redactions on a public document request, you may be called upon to more thoroughly justify the reason for redaction. Any costs incurred by the city attorney to determine whether items marked for redaction are in compliance with Government Code Sections 6254 and 6255 may be passed on to the applicant.******

- Paid family leave
- Vacation and Paid Time Off
- Group health insurance

Workplace Harassment

Thrive Society is committed to operating a safe and nonthreatening workplace environment, and to comply with all applicable labor laws. Harassment based on race, color, religion, sex (including gender identity and pregnancy), national origin, age, disability, genetic information, sexual orientation, or parental status will not be tolerated.

Labor Peace Agreement

As per regulatory requirements, if at any point in time Thrive Society grows to employ 20 or more personnel, the company will first commit to signing a Labor Peace Agreement, and will not interfere in union efforts to organize members of our workforce.

Our Hiring Guidelines:

- Equal Opportunity Employer: without regard to race, color, religion, sexual orientation, gender identity, nationality, veteran status, or any other basis protected by applicable law
- Drug Free Workplace Policy: no employee shall use, possess, sell, convey, distribute, or manufacture illegal drugs, intoxicants, or controlled substances
- Weapon-Free Workplace Policy: we prohibit the possession or use of perilous weapons on company property.
- Tobacco Free Workplace Policy: smoking shall not be permitted in any enclosed area

Employee Training Guidelines

Thrive Society will implement a routine training program to ensure that all personnel employed in both distribution and manufacturing premises are provided information and training that covers all topics necessary to operate a safe, secure, sanitary, productive and welcoming environment.

An effective accident prevention program requires proper job performance from everyone in the workplace. We will ensure that our employees know about all materials and equipment in the facility, known hazards and risk mitigation. Upon hiring, we will train our employees on hazard risks and require they pass an exam to verify they understand our full protocol.

Within 30 days of the start of employment:

- Health and safety hazards
- Hazards presented by all solvents or chemicals used at the licensed premises as described in the material safety data sheets (MSDS)
- Emergency procedures
- Security procedures
- Record keeping requirements
- Training requirements

And prior to independently engaging in any cannabis manufacturing process:

- An overview of all Standard Operating Procedures (SOPs)
- Quality control procedures
- Hazard analysis and control procedures as appropriate
- Proper and safe usage of equipment or machinery
- Safe work practices, including appropriate use of any necessary safety or sanitary equipment
- Cleaning and maintenance requirements
- Emergency operations, including shutdown
- Additional training specific to an employee's job duties

Refresher trainings will be held at a minimum, once a year. In addition, all personnel who prepare, handle, or package edible cannabis products must within 90 days of beginning employment, successfully complete an accredited California Food Handler Certificate course.

Organizational Training

We will provide training for all of these components:

- Anti-harassment, discrimination and retaliation policy
- Timekeeping policy
- Computer and Internet Policy
- Visitor protocols
- Secure electronic recordkeeping
- Inventory control system
- Cannabis laws and regulations (local, state, federal)
- Emergency situations

9. Local Enterprise

Our roots in Nevada County

Since the Back-To-The-Land movement decades ago, Californians have led the way. The organic food movement was founded here, and in these same hills we call home, the largest natural foods distributor in the country was born. There is a legacy of craftsmanship in local agriculture here that carries through to the pioneers of today's cannabis gardeners. In our region, farmers have been producing cannabis of world-renowned quality for many generations, with passion for the craft, respect for the land, and care for the community.

In an era of farm-to-table banquets, micro-distilleries and a craft-beer revolution, the legal cannabis market actually faces consolidation and commodification. The craft suppliers in the region need a partner who understands this consumer sentiment and can leverage the unique quality and reputation of the region's cannabis culture to broaden market appeal. Until the county establishes regulations and permits for local farms, we will work with other nearby counties to source cannabis material. But we anticipate local permits and will be positioned and ready to serve the local cultivators. Our aim is to set a new standard for purity and integrity within the cannabis industry, locally and statewide.

Job Creation

If awarded distribution and manufacturing licenses, Thrive Society will run its operations with the maximum amount of local employees possible. All our founders are local homeowners in Nevada County, and although we cannot legally discriminate against job applicants from out of the area, applicants who have meaningful ties to Nevada City and the surrounding region will be looked upon favorably, as these ties are understood to be the underpinning of our business values.

Thrive Society commits to prioritize hiring locals in particular for the following 10 positions:

- 1 Assistant Manager
- 2 Distribution Facility Employees
- 2 Manufacturing Facility Employees
- 2 Transportation Drivers
- 1 Receptionist
- 2 Security Guards

Commitment to Supporting Local Businesses

The small business ecosystem that has endured in Nevada City and County is unique, and deserves to be supported and preserved. By contracting local businesses and service providers, we will be linking neighbors in a web of economic and social relationships. While it may pencil out to outsource some specialized tasks to virtual or national agencies, will endeavor to spend our purchasing power in support of the local economy. Perpetuating this cycle, locally focused business vendors recycle a much larger share of their revenue back into the local economy than national chains, creating resilience for the small business ecosystem.

Local vendors who we have already contracted, or who we are seeking to contract:

- Electrician : Grass Valley Electric
- HVAC/ Odor mitigation : Brewer Heating and Air Conditioning
- Siteline Architecture : Architectural Plans
- Noah Thompson Drywall for our buildout
- IT services for our facility, networks, and servers
- Printing services : Grass Valley Printers
- Internet : Spiral
- Security Guards: Gold Country Security
- Security Systems : Beam Security
- Marketing firm : 7 Rays
- Local freelance designers & illustrators

10. Qualifications of Principals

The principles of Thrive Society come to this business proposal with extensive experience with medical cannabis, start-up business, marketing, community development and cannabis regulatory affairs.

Resumes for our three principles are provided here:

ORIGINAL

To Agenda

ORIGINAL

To Agenda

ORIGINAL

To Agenda

ORIGINAL

REDACTION JUSTIFICATION INSERT
(To be inserted for every instance of redaction)

RRG-Mnv.Cp.Df.-180

Nevada City Medical Cannabis Business Name: Thrive Society

The following page(s): TSL-M.nv.C.p.D.f-162 - TSL-M.nv.C.p.D.f-164
<insert unique page identifier, or identifier range>

has (have) been redacted or withheld from public disclosure, as determined by

Basil McMahon, Vice-President, Thrive Society
<insert name, professional title, affiliation with applicant>

because the information contained therein is exempt from disclosure under the following Government Code provisions:

Mark with "X" where applicable	Government Code provision:	Examples of information that may be withheld pursuant to each government code section:
X	Section 6254, subd. (c)	Personal, medical, or similar files, the disclosure of which would constitute an unwarranted invasion of privacy
	Section 6254, subd. (f)	Investigatory or security files compiled by a local agency for licensing purposes
	Section 6254, subd. (n)	Licensee's personal financial data
	Section 6255, subd. (a)	Personal contact information (business contacts should not be redacted)
	Section 6254	General public interest exemption (provide explanation below)
	Other	(Provide explanation below)

Explanation for redaction:

******Please note that if objection is made for the redactions on a public document request, you may be called upon to more thoroughly justify the reason for redaction. Any costs incurred by the city attorney to determine whether items marked for redaction are in compliance with Government Code Sections 6254 and 6255 may be passed on to the applicant.******

Appendix

Business Organizational Status

The following screenshots are taken from https://businesssearch.sos.ca.gov:

201803610667 THRIVE SOCIETY LLC

Registration Date:	02/05/2018
Jurisdiction:	CALIFORNIA
Entity Type:	DOMESTIC
Status:	ACTIVE
Agent for Service of Process:	DANIELLE DAO 2038 NEVADA CITY HWY PMB 564 GRASS VALLEY CA 95495
Entity Address:	2038 NEVADA CITY HWY PMB 564 GRASS VALLEY CA 95495
Entity Mailing Address:	2038 NEVADA CITY HWY PMB 564 GRASS VALLEY CA 95495
LLC Management	Managers

201803610672 THRIVE MIGRATION LLC

Registration Date:	02/05/2018
Jurisdiction:	CALIFORNIA
Entity Type:	DOMESTIC
Status:	ACTIVE
Agent for Service of Process:	DANIELLE DAO 2038 NEVADA CITY HWY PMB 564 GRASS VALLEY CA 95495
Entity Address:	2038 NEVADA CITY HWY PMB 564 GRASS VALLEY CA 95495
Entity Mailing Address:	2038 NEVADA CITY HWY PMB 564 GRASS VALLEY CA 95495
LLC Management	One Manager

201803610679 THRIVE LAB LLC

Registration Date:	02/05/2018
Jurisdiction:	CALIFORNIA
Entity Type:	DOMESTIC
Status:	ACTIVE
Agent for Service of Process:	DANIELLE DAO 2038 NEVADA CITY HWY PMB 564 GRASS VALLEY CA 95495
Entity Address:	2038 NEVADA CITY HWY PMB 564 GRASS VALLEY CA 95495
Entity Mailing Address:	2038 NEVADA CITY HWY PMB 564 GRASS VALLEY CA 95495
LLC Management	One Manager

For additional information, see *Section 2: Business Plan- Entity Structure*.

Registration and Articles of Organization will be submitted as soon as they are available.

ORIGINAL

To Agenda

ORIGINAL

To Agenda

ORIGINAL

To Agenda

ORIGINAL

REDACTION JUSTIFICATION INSERT
(To be inserted for every instance of redaction)

RRG-Mnv.Cp.Df.-186

Nevada City Medical Cannabis Business Name: Thrive Society

The following page(s): TSL-M.nv.C.p.D.f-167 - TSL-M.nv.C.p.D.f-169
<insert unique page identifier, or identifier range>

has (have) been redacted or withheld from public disclosure, as determined by

Basil McMahon, Vice-President, Thrive Society
<insert name, professional title, affiliation with applicant>

because the information contained therein is exempt from disclosure under the following Government Code provisions:

Mark with "X" where applicable	Government Code provision:	Examples of information that may be withheld pursuant to each government code section:
	Section 6254, subd. (c)	Personal, medical, or similar files, the disclosure of which would constitute an unwarranted invasion of privacy
X	Section 6254, subd. (f)	Investigatory or security files compiled by a local agency for licensing purposes
	Section 6254, subd. (n)	Licensee's personal financial data
	Section 6255, subd. (a)	Personal contact information (business contacts should not be redacted)
	Section 6254	General public interest exemption (provide explanation below)
	Other	(Provide explanation below)

Explanation for redaction:

******Please note that if objection is made for the redactions on a public document request, you may be called upon to more thoroughly justify the reason for redaction. Any costs incurred by the city attorney to determine whether items marked for redaction are in compliance with Government Code Sections 6254 and 6255 may be passed on to the applicant.******

GOLD COUNTRY SECURITY

Security Consulting

Providing guard and patrol services throughout Western Nevada County

(530)273-1367

February 12, 2018

To: Thrive Society

From: Jarret Fink

RE: Security Plan Review
138 New Mohawk Rd
Nevada City, CA 95959

I have reviewed the security plan provided for your proposed new business site. I find that your security plan is complete, acceptable and meets all state guidelines set forth in California Code of Regulations, Title 17 Division 1 Chapter 13. SUBCHAPTER 3. REQUIREMENTS OF OPERATION Article 1. §40200. It is clear that your company is making the safety of its neighbors, employees and customers a high priority.

As per our discussion, I would recommend the following minor additions to your security plan;

[redacted].

Sincerely,

Jarret Fink

Jarret Fink
Security Consultant
PI License # 15771
Security License #PPO15449
(NCSO Retired)

ORIGINAL

REDACTION JUSTIFICATION INSERT
(To be inserted for every instance of redaction)

RRG-Mnv.Cp.Df.-188

Nevada City Medical Cannabis Business Name: Thrive Society

The following page(s): TSL-M.nv.C.p.D.f-170
<insert unique page identifier, or identifier range>

has (have) been redacted or withheld from public disclosure, as determined by

Basil McMahon, Vice-President, Thrive Society
<insert name, professional title, affiliation with applicant>

because the information contained therein is exempt from disclosure under the following Government Code provisions:

Mark with "X" where applicable	Government Code provision:	Examples of information that may be withheld pursuant to each government code section:
	Section 6254, subd. (c)	Personal, medical, or similar files, the disclosure of which would constitute an unwarranted invasion of privacy
X	Section 6254, subd. (f)	Investigatory or security files compiled by a local agency for licensing purposes
	Section 6254, subd. (n)	Licensee's personal financial data
	Section 6255, subd. (a)	Personal contact information (business contacts should not be redacted)
	Section 6254	General public interest exemption (provide explanation below)
	Other	(Provide explanation below)

Explanation for redaction:

******Please note that if objection is made for the redactions on a public document request, you may be called upon to more thoroughly justify the reason for redaction. Any costs incurred by the city attorney to determine whether items marked for redaction are in compliance with Government Code Sections 6254 and 6255 may be passed on to the applicant.******

ORIGINAL

To Agenda

ORIGINAL

To Agenda

ORIGINAL

To Agenda

ORIGINAL

To Agenda

ORIGINAL

To Agenda

ORIGINAL

To Agenda

ORIGINAL

To Agenda

ORIGINAL

ORIGINAL

ORIGINAL

ORIGINAL

ORIGINAL

To Agenda

ORIGINAL

To Agenda

ORIGINAL

To Agenda

ORIGINAL

To Agenda

ORIGINAL

REDACTION JUSTIFICATION INSERT
(To be inserted for every instance of redaction)

RRG-Mnv.Cp.Df.-204

Nevada City Medical Cannabis Business Name: Thrive Society

The following page(s): TSL-M.nv.C.p.D.f-171 - TSL-M.nv.C.p.D.f-185
<insert unique page identifier, or identifier range>

has (have) been redacted or withheld from public disclosure, as determined by

Basil McMahon, Vice-President, Thrive Society
<insert name, professional title, affiliation with applicant>

because the information contained therein is exempt from disclosure under the following Government Code provisions:

Mark with "X" where applicable	Government Code provision:	Examples of information that may be withheld pursuant to each government code section:
X	Section 6254, subd. (c)	Personal, medical, or similar files, the disclosure of which would constitute an unwarranted invasion of privacy
	Section 6254, subd. (f)	Investigatory or security files compiled by a local agency for licensing purposes
X	Section 6254, subd. (n)	Licensee's personal financial data
	Section 6255, subd. (a)	Personal contact information (business contacts should not be redacted)
	Section 6254	General public interest exemption (provide explanation below)
	Other	(Provide explanation below)

Explanation for redaction:

******Please note that if objection is made for the redactions on a public document request, you may be called upon to more thoroughly justify the reason for redaction. Any costs incurred by the city attorney to determine whether items marked for redaction are in compliance with Government Code Sections 6254 and 6255 may be passed on to the applicant.******

ORIGINAL

To Agenda

ORIGINAL

REDACTION JUSTIFICATION INSERT
(To be inserted for every instance of redaction)

RRG-Mnv.Cp.Df.-206

Nevada City Medical Cannabis Business Name: Thrive Society

The following page(s): TSL-M.nv.C.p.D.f-186
<insert unique page identifier, or identifier range>

has (have) been redacted or withheld from public disclosure, as determined by

Basil McMahon, Vice-President, Thrive Society
<insert name, professional title, affiliation with applicant>

because the information contained therein is exempt from disclosure under the following Government Code provisions:

Mark with "X" where applicable	Government Code provision:	Examples of information that may be withheld pursuant to each government code section:
	Section 6254, subd. (c)	Personal, medical, or similar files, the disclosure of which would constitute an unwarranted invasion of privacy
	Section 6254, subd. (f)	Investigatory or security files compiled by a local agency for licensing purposes
	Section 6254, subd. (n)	Licensee's personal financial data
	Section 6255, subd. (a)	Personal contact information (business contacts should not be redacted)
	Section 6254	General public interest exemption (provide explanation below)
X	Other	(Provide explanation below)

Explanation for redaction:
Neighbor letter of support, kept confidential at the request of the author

******Please note that if objection is made for the redactions on a public document request, you may be called upon to more thoroughly justify the reason for redaction. Any costs incurred by the city attorney to determine whether items marked for redaction are in compliance with Government Code Sections 6254 and 6255 may be passed on to the applicant.******

Memorandum February 12th, 2018

Update to Neighborhood Outreach

On February 12th, we met with Jaynie Ayden, Director of Twin Ridges Home Study Program. We felt that in light of the recent discussion in City Hall about MCB proximity to schools and youth centers, that it would be prudent for us to approach Mrs. Ayden, to introduce ourselves and to speak with her about any concerns or questions she may have about our proposed business.

She was welcoming and receptive. With this memo, we wanted to provide a brief update to our Neighborhood Outreach efforts and to record the one concern that was raised in our meeting with Mrs. Ayden. She expressed a concern about the speed of neighborhood traffic that drives past their facility, and asked if speed control signs could be installed on New Mohawk to make traffic drive slower. We assured her that we would support her desire to see effective traffic controls upheld in the area, and told her that we would document her concern, and encourage the planning commission to consider installing traffic control signs, “slow” or “caution” signs, and that we would incorporate policies into our personnel trainings for distribution vehicle drivers to ensure compliance with all traffic laws, and a particular sensitivity to caution, driving on New Mohawk.

To Agenda

ORIGINAL

To Agenda

ORIGINAL

To Agenda

ORIGINAL

REDACTION JUSTIFICATION INSERT

(To be inserted for every instance of redaction)

RRG-Mnv.Cp.Df.-210

Nevada City Medical Cannabis Business Name: Thrive Society

The following page(s): TSL-M.nv.C.p.D.f-188 - TSL-M.nv.C.p.D.f-189

<insert unique page identifier, or identifier range>

has (have) been redacted or withheld from public disclosure, as determined by

Basil McMahon, Vice-President, Thrive Society

<insert name, professional title, affiliation with applicant>

because the information contained therein is exempt from disclosure under the following Government Code provisions:

Mark with "X" where applicable	Government Code provision:	Examples of information that may be withheld pursuant to each government code section:
	Section 6254, subd. (c)	Personal, medical, or similar files, the disclosure of which would constitute an unwarranted invasion of privacy
X	Section 6254, subd. (f)	Investigatory or security files compiled by a local agency for licensing purposes
	Section 6254, subd. (n)	Licensee's personal financial data
	Section 6255, subd. (a)	Personal contact information (business contacts should not be redacted)
	Section 6254	General public interest exemption (provide explanation below)
	Other	(Provide explanation below)

Explanation for redaction:

Site Plans redacted because public knowledge of the facility layout could pose a security risk

******Please note that if objection is made for the redactions on a public document request, you may be called upon to more thoroughly justify the reason for redaction. Any costs incurred by the city attorney to determine whether items marked for redaction are in compliance with Government Code Sections 6254 and 6255 may be passed on to the applicant.******

ORIGINAL

TSL-Mnv.Cp.Df-199
RRG-Mnv.Cp.Df.-211

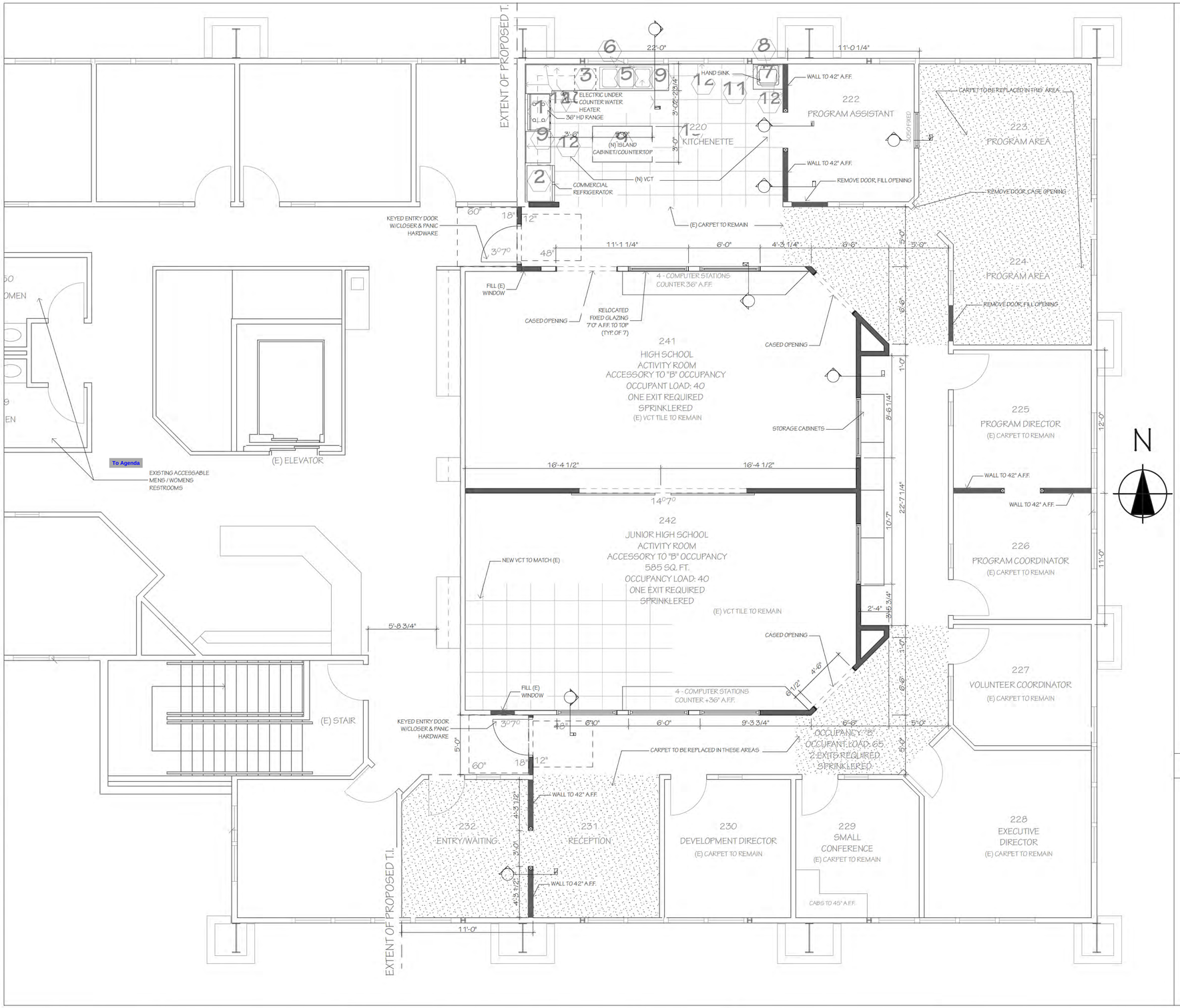

To Agenda

WALL KEY

(E) WALLS TO REMAIN

(N) INTERIOR PARTITION WALLS

Revisions

siteline architecture
Andrew J. Pawlowski, Architect
644 Zion Street
Nevada City CA 95959
530.478.9415 - t
530.478.9416 - f
www.sitelinearch.com

TENANT IMPROVEMENTS
for
FRIENDSHIP CLUB
138 NEW MOHAWK ROAD NEVADA CITY CA APN 37-060-87

drawn by:	RAB/JSJ
checked by:	
date:	1/4/18
scale:	1/4" = 1'0"
job #:	04120

FLOOR PLAN

A3.2

April 10, 2018

Thrive Society
ATTN: Basil McMahon
138 New Mohawk Road
Nevada City, CA 95959

Via email: **l.basil.mcmahon@gmail.com**

Re: Application Clarification Requests from Nevada City Planning Department

Responses provided by Thrive Society principal Basil McMahon in red:

1. Please clarify, whether the pre-roll machine is a trimming machine. This process may actually fall within the "cultivation" permit category.

The piece of equipment we intend to use to produce pre-rolls is called a "Knock Box", made by Futurola. It is a compact, table-top device designed to take pre-ground flower material and pack paper cones, and is not capable of being used as a trimming machine.

For more of a visual explanation of the use of this piece of equipment, here is a link to a brief promotional video made by the Futurola company:
https://www.youtube.com/watch?v=kNp-5FYaMWw
(Please excuse the obnoxious soundtrack. you could mute the audio if you prefer)

2. Phase II of your business plan (Page identifier: TSL-M.NV.C.p.D.f-90) describes your potential partnership with other licensed suppliers that use a co2 extraction process. Does this mean you will utilize a co2 extraction process as part of that partnership? Or are you only suggesting that you will use the partner's bulk product to fill and package into individual components on the partner business's behalf?

We do not plan to utilize co2 extraction methods in our facility, during Phase II or otherwise. Yes, you are correct, we intended to suggest that we would receive bulk extract, or other raw materials, from a 3rd party partner, and focus solely on the filling and packaging of individual units to produce a finished product.

To clarify, the example on page TSL-M.NV.C.p.D.f-90, of "filling and packaging their vape pen cartridge products", was intended to provide an example of how we may perform co-packing services (otherwise known as "Contract Packaging") to other manufacturers or cannabis brands. The co-packing activities that we intended to perform in our facility would vary depending on the product produced, but may include: packaging, assembly, design, labeling, purchasing, and shipping logistics, but would not involve any extraction activities not otherwise outlined in our business plan.

Through feedback we've received from licensed operators around the region that we have received over the last few months since submitting our application, we anticipate that there may be demand for co-packing services. With a number of prospective licensed manufacturers focused on solvent extraction in the building and elsewhere in Nevada City, we feel that we would be better off focusing on a different aspect of the supply-chain.

3. Clarify in general what your hours of operation will be, including manufacturing and your distribution activity.

In our application, our proposed hours of operation were:
8:00AM-6:30PM Weekdays
9:00AM- 6:00PM Weekends

Although we would like to request the ability to operate:
7:00AM-7:00PM Weekdays
7:00AM- 7:00PM Weekends

We have been speaking to licensed dispensaries and distributors from across the state, and are coming to understand that it may be important for us to request permission to operate longer hours on days when transportation vehicles are in use. Many dispensaries request that deliveries arrive before 10:00 or 11:00 am, when their businesses open to the public, or on weekends when not open to the public. In order to accommodate this request, we would more likely need to load up a transport vehicle and depart earlier in the morning, depending on the distance travelled. Our geographic location, being +/-3 hours from many licensed retailers, is another factor that we did not account for sufficiently in our original proposal.

These are important considerations for our distribution operations, but less of a concern for the manufacturing facility. If it is your preference that we keep to the hours originally proposed for our manufacturing facility, we could do that, although it would simplify our facility opening/closing protocols to maintain consistency of operating hours between the two premises.

For further clarification, our transport vehicles will only be "in service" during the specified hours of operation (actively transporting product, cash, or otherwise being operated in the service of the business). We will not utilize transport vehicles for business purposes outside of the hours of operation, and will not leave product, cash or valuables in the vehicles while not attended.

4. Indicate the number of employees you will have at peak operating times.

Please refer to the answer provided to question #7.

5. How many distribution vehicles will you be using? Will the number of vehicles expand with the operation and if so what is the maximum number you will have? Will distribution vehicle(s) be stored on-site?

Our plan is to begin with one distribution vehicle (referred to as the "primary" vehicle below), and within the first few months, also outfit a secondary distribution vehicle [redacted]

[redacted], more information below). This "secondary" vehicle will be utilized as a service vehicle on occasion, but is otherwise [redacted] for transit to/from work. We anticipate expanding to two primary vehicles, plus one secondary vehicle within the first year.

We recognize that parking and security are concerns for the Planning Department and would like to take steps to ensure that parking impacts and security concerns are minimized. One way we thought to address the concern of primary transport vehicles left unattended in the parking lot overnight would be to have facility personnel use them to commute to/from work at the beginning and end of the work day. This would also alleviate the demand on the parking spaces allocated to us by the building manager. If this is not preferred, please let us know and we would be happy to come up with a better plan.

6. Describe the distribution vehicle(s) you plan to use? Are they leased or privately owned? Describe the security features of the vehicle(s) and precautions you plan on taking during this component of the business.

As our primary vehicle, we intend to purchase (finance) a [redacted] that is outfitted with an alarm, GPS, temperature control, security camera, and locking steel cage affixed to the vehicle frame for product storage. The [redacted] will be unmarked, and the cargo area of the vehicle will not be visible from outside the vehicle. The vehicle's security and camera systems are designed to discourage break-ins when the vehicle is empty and unattended- but more importantly to rapidly alert the authorities in the event of a security incident.

In addition to this primary vehicle, we intend to utilize a [redacted] as a secondary vehicle for intermittent use, and/or local area transport. This [redacted] and will be outfitted with the same security features, including a locking fabricated steel cage affixed to the vehicle bed. Both vehicles and all transport personnel will comply with state regulatory requirements, including obtaining a Motor Carrier Permit for the transport of goods for hire.

We have discussed with the building manager and the other cannabis applicants in the building, sharing the cost of hiring an on-site security guard to monitor traffic to the building and to supervise instances of loading and unloading to the building. Gold Country Security, who is already familiar with building, is prepared to provide this service [redacted]

Transport personnel will be required to attend a training program that includes situational awareness and protocols for incident response. One provider of such training that we are considering is Hard Car Security, a security consulting, service and transport company specializing in the cannabis industry: http://www.hardcarsecurity.com/security-guard-training/

Two transport personnel will attend a vehicle at all times while in use for transporting cannabis. During loading and unloading of transport vehicles, the building Security Guard will be positioned near the loading bay door, with a good vantage point of the street and surroundings.

During transport of cannabis products, transport vehicles will only travel directly to or from our permitted facility, and the premises of other licensed cannabis businesses with whom we are conducting a business transaction. The path of transit will be established ahead of time and recorded by GPS, with deviations allowed only for necessary rest, fuel, or vehicle repair stops, or in the case of an emergency.

7. Please indicate the number of parking spaces allocated by the building manager and describe how the allocated parking spaces will accommodate employees at peak operating times, the number of distribution vehicles, and visitor/vendor parking?

Parking

After a minor revision to our lease, the number of parking spaces allocated to Thrive Society is 14. The following table indicates how our allocated parking spaces will accommodate parking needs during peak operating times:

Category	# of Personnel	# of Parking Spaces	Notes
Principals	3	1	Two principals will commute using transport vehicles
Managers	2	2	Brought on initially
Facility Employees	3	3	Brought on later, as growth targets met
Transport Workers	4	4	2 per vehicle. Work in facility when not transporting
Transport Vehicles	0	2	Vehicles parked at facility only when not in service
Reserved for Visitors/Vendors	0	2	For security, scheduled vendor appointments will be staggered to prevent overlap
Total	12	14	

Personnel

To begin with, in addition to Thrive Society's 3 principals, we anticipate having 2 other employees, for a total of 5. We expect to bring on a few other employees as we grow (see table, above) and employ two transport workers per transport vehicle in our fleet, but we estimate that the facility and the number of parking spaces allocated to us would only accommodate a fleet of two primary transport vehicles, plus the use of one of ou [redacted] as a secondary transport vehicle.

Accommodating Growth

With a number of prospective MCB applicants in the New Mohawk building, concerns about parking, security, neighborhood impact and capacity are certainly valid. We would like to assure you that we are mindful of these concerns and have been exploring solutions to operate efficiently, minimizing impact and working within the multiple natural constraints of our permit, licenses, allocated parking spaces, building, and surrounding environment.

Thrive Society principal Danielle Dao holds a lease on a 3200 sq. ft. warehouse facility in Loma Rica (Unincorporated Nevada County). As a business, we may decide to utilize this warehouse property in a supporting capacity- for hosting meetings with clients and vendors,

holding educational workshops, and for storing and assembling packaging materials. *Under no circumstances will we store regulated cannabis products or cash at this facility*- but it may be very helpful to utilize the building for non-cannabis related operations, like client relations, community engagement, and branding and marketing. Also, it could help alleviate the pressure to host all of our various non-cannabis business functions within the state-licensed (and city permitted) facility.

If the moment should arrive in the future, for example, where Thrive Society might want to employ a couple additional facility employees, we will need to implement a carpool or ride-sharing program to keep within the number of parking spaces allocated by the building manager. A protocol of arranging an employee carpool from the Loma Rica facility would provide a consistent and controlled way of minimizing traffic and parking impacts by our operations. Transport vehicles could also be parked at this property overnight if it was preferred, where they could be kept under video surveillance.

We are committed to operating in a way that is prudent and in keeping with the intent outlined in our business plan- not to utilize this secondary facility as a loophole and expand beyond the natural constraints we recognize are appropriate for the building, roads and neighborhood.

If we should be fortunate to find our business out-performing our expectations, we would explore the potential of relocating one or both of our Distribution or Manufacturing facilities to a property which would accommodate that growth. But that's a ways down the road, and right now we are in start-up mode and expect to operate lean for some time as we establish our internal systems and build capacity.

On behalf of Thrive Society, I am seeking the Planning Commission's approval to add a process to the list of activities our business is authorized to conduct.

Specifically, we are seeking approval to perform what is known in the industry as "Micro-extractions", which involves the use of a very small scale, table top closed-loop extraction instrument that uses ethanol (less than 300 ml) to produce an sample amount of extract from loose leaf trim.

As a licensed cannabis distributor, a decent amount of our business right now is in sourcing bulk amounts of cannabis "biomass" (loose leaf trim and/or flower material) for the extraction needs of licensed manufacturers. In order to be able to verify that the cannabis biomass will pass the state's rigorous testing standards, it is imperative that we be able to prove to our customers (the licensed extraction businesses we service) that the biomass we are sourcing for them will produce clean results once they have extracted it into oil.

The instrument that we are requesting clearance to use is a product called a "Source Turbo", by the Company from Colorado called ExtractCraft. It extracts less than 2 oz. of biomass using less than 300 ml of ethanol in a completely closed-loop process- no solvent vapors are emitted, and no high pressure is involved. This is an instrument that is commonly used in licensed cannabis facilities for this very purpose. The volume of ethanol used in the process is less than that of a soda can, or a bottle of Isopropyl Alcohol that can be purchased at CVS or Walgreens.

We recognize that it would be necessary and proper to obtain the approval of the NC Fire Department first in order to obtain approval to use this instrument, so I or my colleague Graham was planning to reach out to provide them with additional information to be able to review, unless you would prefer otherwise.

Please confirm that you recieved my request and would be able to accommodate adding this item to the agenda for the Planning Commission's Feb. 21st meeting.

To Agenda

AMENDMENT
TSL-M.nv.Cp.DI.AMEND.3
RPRG-Mnv.Cp.DI.218

SOURCE

by ExtractCraft

Turbo Mode User Manual

AMENDMENT

TSL-M.nv.Cp.DI.AMEND.3 RRG-Mnv.Cp.DI.219

TURBO MODE USER MANUAL

Version 11 June 5, 2018

Part # 1007-1051

ExtractCraft
105 South Sunset Street, Unit M,
Longmont, CO, 80501
United States
Phone: 720-307-8628

customer support: ***info@extractcraft.com***

CONTENTS:

Safety.....1
Safety & Plant extract warning
The Source: Main Function.....2
Appliance for Plant Extractions
Alcohol Solvent
Source Operation & Making a Plant Extract.....3
Care & Cleaning.....9
Mobile Application.....10
Installing the Mobile App
Setting up Bluetooth
Launch the Source App
Using the Menu
Understanding the Control Screen
Altitude Tuning.....13
Botanical Recipies.....14
Troubleshooting.....15
Technical Specifications.....16
Warranty.....16
Glossary.....16

SAFETY

WARNING: For your safety always allow all metal parts of the Source to completely cool before handling. The reservoir cup, collector, and metal top on the base can get very hot.

WARNING: For your safety and convenience always follow these safety guidelines:

- **Place the Source well away from heat sources,** direct sunlight, or places where heat may become concentrated.
- **Inspect the outer collector** for cracks or any defect and ensure that the lid and lower seal fit securely.
- **Do not use the Source** if any parts are damaged, flaking or show excessive wear in any way.
- **Alcohol is extremely flammable!**
- **Make sure the fan in the base unit is always running.** The unit must not be used if the fan stops running.
- **Always use caution** when handling alcohol and keep it well away from any kind of flame or ignition source. This goes for while operating the device, during preparation, and anytime it is exposed outside of a closed container. Keep alcohol away from children and pets.
- **Always allow the outer collector to cool** before opening the lid.
- **Never allow the collector to over flow,** this could flood the pumps.
- **Keep the base of the unit away from water at all times.** Do not immerse or expose base unit into water or liquid of any kind.

SOLVENT: Only food grade ethanol

WARNING: Only food-grade ethanol may be used in the Source. Do not use methanol (wood alcohol) or any other solvents in the Source as they may be poisonous, lead to sickness or possibly death, or create fire and explosion hazards. For safe operation it's very important no other solvents other than food grade ethanol are present in the machine at any time.

PLANT EXTRACT WARNING

WARNING: Some plant extracts are potentially dangerous due to the toxicity of concentrated chemical components and may be harmful or even deadly if ingested or absorbed through skin or membranes.

Some botanical oils that would do no harm in a diluted form may do serious harm in higher concentrations. The internal use of botanical oils can also pose hazards to pregnant women.

The ***flash point*** (temperature at which a compound gives off sufficient vapor to ignite) of each plant extract is different. Many common oils, such as tea tree, lavender, and citrus oils are classified as flammable liquids.

Botanical oils valued for aroma-therapeutic qualities may cause skin irritation, allergic reactions and other health problems. You must determine the hazards and handling requirements of the particular oils you extract.

ExtractCraft makes no claims about botanical oils and their uses. This is simply a device for extracting them.

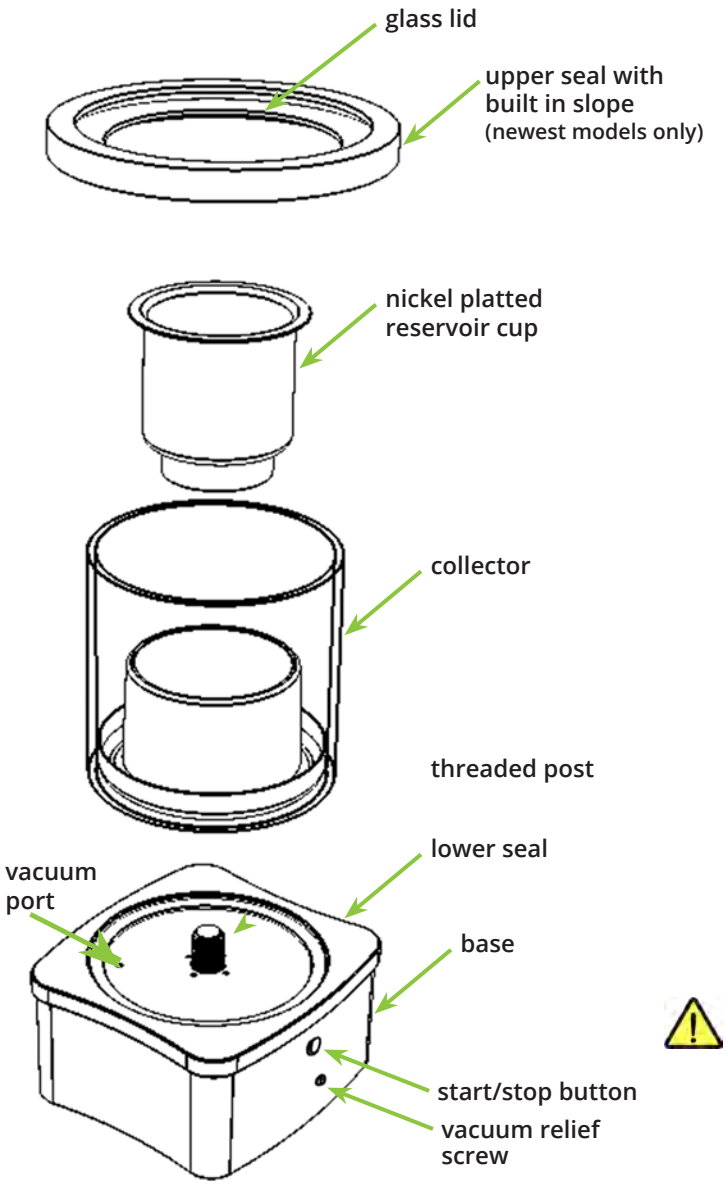

The Source: Main Parts

THE SOURCE MAIN FUNCTION

APPLIANCE FOR PLANT EXTRACTIONS

The Source is an easy to use home appliance for extracting plant essences.

Plant essences are key to the smell, taste, and other properties of plants and are used in flavorings, perfumes, herbal extracts and medicinals.

The first step in making plant extracts is to make a ***tincture***. A tincture is a solution made from the combination of plant matter and food-grade alcohol. Lavender, mint, hops, rosemary, cinnamon, radishes, calendula flowers and many other plants have been used successfully. The oils of some plants, such as mint and lavender, dissolve in alcohol very quickly (5 to 20 minutes). Others, such as vanilla or rose petals, may take hours or longer for the best result. Some extracts benefit from using alcohol that has been thoroughly chilled in the freezer during the tincture process, others are best prepared at room temperature. See www.extractcraft.com for more information, recipes and links and share your own results.

The second step is to simply use the Source to separate the plant essence from the tincture. The Source removes the alcohol from the tincture, leaving the pure plant essence. The alcohol is captured for reuse.

⚠ For best results and operation use 190-proof (95%) or higher food grade ethanol.

MAKING A PLANT EXTRACT

1. INSTALL THE MOBILE APP

The Source app is a great way to monitor the time, temperature of heat being applied, and vacuum. Information for installation can be found under ***'Mobile App' on page 10.***

Install the app.

2. GATHER THE NEEDED SUPPLIES

You will need:

- a glass container
- **up to** 2 oz. plant matter
- 190-proof grain alcohol
- strainer and filters
- funnel for rebottling the alcohol
- suitable container for storing extract

Supplies

3. MAKE THE TINCTURE

Place clean plant matter in a clean glass container. Divide large pieces into similar smaller lengths for good fit. Cover with 190-proof grain alcohol to about 1/4" above the plant volume. Allow the plant matter to soak for 5-20 minutes or more. See ***www.extractcraft.com*** for recipes specific to your botanicals.

Make the tincture.

4. UNSCREW THE NICKEL PLATED RESERVOIR CUP

Reach inside the collector and unscrew the reservoir cup from the base.

nickel plated reservoir cup

5. STRAIN THE TINCTURE

Strain the tincture into the reservoir cup. Use a strainer, coffee filter, or Buchner funnel to remove particles.

Tip *The repeated and thorough filtering results in a more clear end product.*

Strain the tincture into the reservoir cup.

6. READY THE SOURCE

Place the Source on a flat surface. Check that the lower seal is aligned with the base. Ensure the outer collector is seated properly in the recess of the lower seal on the base. A vacuum will be formed in the collector, so it must make good contact with the lower seal.

Ready the Source.

7. INSTALL THE RESERVOIR CUP

Carefully reach inside the collector and gently screw the reservoir cup onto the threaded post.

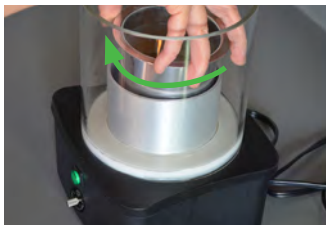

Screw the reservoir cup onto the threaded post of the base lightly.

8. PLACE THE LID

Place the lid flat with the wide rubber seal facing down and in contact with the glass collector rim.

Once the Source is in operation, a vacuum is created and the lid will be held firmly in place with negative pressure.

Place the lid on the collector.

Tip *The wider rubber ring of the upper seal rests on the rim of the collector. The narrower rubber ring faces up.*

9. PLUG IN THE SOURCE

Plug the Source into a 120 VAC outlet. The indicator button on the base glows steady green when the Source has power and is ready for use. If the button is not lit, then the Source is not getting power. When the Source is plugged in, the fan runs to ventilate the base.

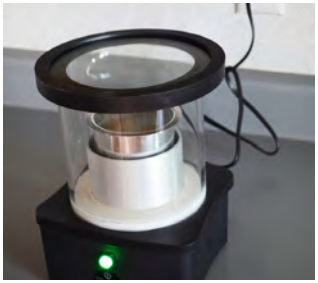

Plug in the Source.

10. SEAL THE VACUUM

Turn the vacuum valve screw fully to the **right** to close the vacuum release valve.

(When turned to the left, the vacuum relief opens to allow air into the unit, releasing the vacuum seal so the lid may be removed.)

*Turn the screw fully to the **RIGHT** to seal the chamber.*

Never remove screw completely.

11. START THE SOURCE

Normal Mode

Press the green button once ***or*** select the **START PROCESS** button on the app to start in normal mode.

- **1 slow flash** of the green button indicates the process starting.
- 2 fast **flashes** indicates stopping.

Turbo Mode

Press and hold the green button on the base for a full 3 seconds then release; 2 slow flashes indicate Turbo mode began.

(When using the app a green comm icon indicates the app is communicating with the Source via Bluetooth. A red comm icon indicates no Bluetooth communication: see trouble shooting p.15)

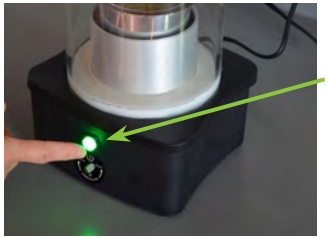

1 slow flash *= starting Normal Mode*

2 slow flash *= starting Turbo Mode*

2 fast flashes *= stopping process*

Press the green button on the base to start the Source or use the mobile app.

comm icon

Mobile app START PROCESS button (When the process is running, the same button is for STOP PROCESS.)

12. CHECK THE VACUUM

When the Source is first started, the vacuum pump will run for a few minutes until it reaches full vacuum. When the vacuum pump start, press down firmly on the lid for 5-10 seconds. This helps to seal the chamber while the pump creates the vacuum. After that, the pump runs periodically to maintain the vacuum.

*If the vacuum **isn't establishe** within 10 seconds, try pressing down on the lid to help it seal.*

Use the mobile app to view the vacuum level. The vacuum level value will rise, then at maximum vacuum the pump will shut off. If a seal is not established within 10 seconds, check the following:

- Make sure the vacuum relief screw, located below the green button on the base, closed.
- Inspect the lower seal, collector, and upper seal and adjust them if needed to achieve better contact.
- Try pressing down on the lid if you haven't done so.
- Refer to Troubleshooting on page 15.

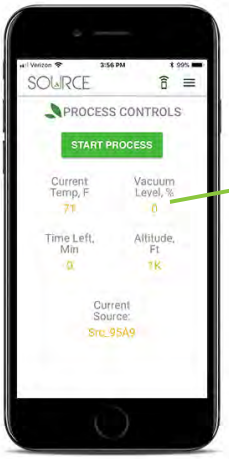

After starting, this value will begin to quickly rise to 100 at full vacuum.

13. USING THE ICE TRAY

The ice tray cools the lid to increase condensation of the alcohol vapor, which accelerates the extraction process and allows the vacuum pumps to run less often. Fill the tray with ice cubes (or with water and freeze overnight) place it on the lid and begin the extraction.

Always use the ice tray to help condense the alcohol, process faster, and requite less pump activity.

14. MONITOR EXTRACTION PROGRESS

Monitor the extraction by watching for alcohol condensing on the lid then rolling down the sides to accumulate in the collector. The liquid in the reservoir cup may or may not boil, but as long as condensation is happening on the glass progress is being made. Make sure condensed drops on the lid aren't falling back into the reservoir cup.

The vacuum pumps will run periodically to maintain the required vacuum level and the heat relay will make a clicking sound. In Turbo mode expect the pumps to run more often.

The maximum run time is 120 minutes per cycle. It can be restarted mid-cycle or just when it ends without the need for a cool-down period. It's very important to closely monitor the extraction at the end to stop the process at the exact desired consistency.

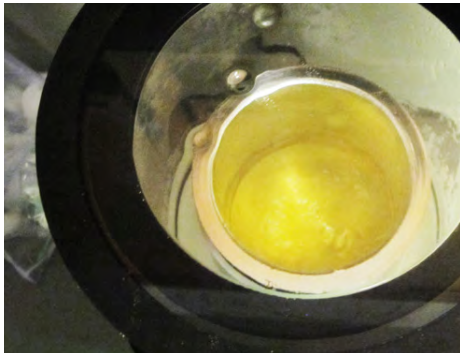

View heat input temperature, vacuum level, and run time for the extraction.

Monitor the extraction progress. You will see the alcohol condensing into the collector. About 4 hours is needed to extract the alcohol from a completely full reservoir.

Closely monitor process during the last 10-20 minutes. *The Source's temperature will rise above the intended temperature when the alcohol in the solution is gone and active evaporation seises.*

Never leave the Source unattended while operating.

15. WHEN EXTRACTION IS FINISHED

As the alcohol is evaporated from the tincture, it accumulates in the collector, and the plant extract remains in the reservoir cup.

The extraction can be ended at any point, as a tincture, oil, sap, or wax-like substance otherwise known as an absolute or concrete. The target consistency depends completely on preference and intended use.

STOP PROCESS

Press the button to stop the process or use the app STOP PROCESS button. ***2*** *quick* ***flashes*** *indicates stopping.*

16. STOP THE SOURCE

Press and release the green button once to manually stop the process. On the app, you can stop it by selecting the STOP PROCESS button.

On stopping, the green button on the base flashes **2 times** quickly.

17. RELEASE THE VACUUM

Turn the vacuum relief screw to the left 4-full turns (8-half turns) to relieve the pressure so you can remove the lid in the next step — **do not remove the screw completely**. It may take up to 60 seconds for pressure to release. Do not force the lid off.

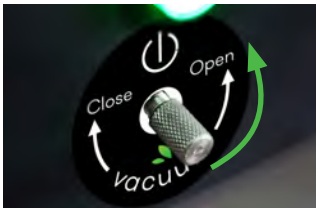

Loosen screw to the left to relieve vacuum pressure.

18. ALLOW CHAMBER TO COOL

When finished, always allow the collector and reservoir cup to cool before handling. If the Source is operated without alcohol directly in the cup, the cup will become very hot, and require extra time to cool.

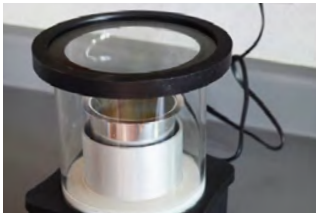

Allow components to cool before handling and removing reservoircup.

19. REMOVE THE EXTRACT

Remove the lid. Unscrew the reservoir from the post and transfer the extract into a storage container. Store the extract in a sealed container away from direct light and heat, and out of reach of pets and children.

20. COLLECT ALCOHOL FOR REUSE

If the collector is full enough, spillage may occur **from the bottom** when pouring out. Emptying the collector over a large bowl is recommended.

Most botanical oils will not leave any taste or smell in the reclaimed alcohol, however, some may leave a slight trace. If so, reuse that alcohol for similar extracts.

Always store alcohol out of reach of pets and children and well away from heat, combustion, and ignition sources.

Pour alcohol from collector into a container and store safely for reuse.

CARE FOR THE SOURCE:

It's very important to remember the Source is an advanced piece of technology and requires a certain degree of care to keep it in top operating condition.

Glass Globe: The glass globe will chip or crack if dropped or with a collision against another object. If any damage occurs the ability for a vacuum to form may become impossible. If this happens replacement globes are available for purchase.

Crucible Cup: The Crucible must never be tightened down onto the heating post. Lightly turn the cup onto the threaded heating post until it meets resistance and stop turning. Never use damaged or flaking cups, replacements are available for purchase.

Vacuum Relief Screw: NEVER REMOVE the screw all the way. To release the vacuum turn only 4 full turns to the left and wait for the pressure to equalize. Removing the screw can result in cross threading and will make creating a vacuum impossible. If this happens send the unit back to ExtractCraft for repairs, but it's not covered under the manufacture defects warranty.

Green Button: Keep green button clean and clear of any debris or sticky elements. If the button becomes stuck, you can use a small amount of alcohol on a cotton swap then let dry over night. If free movement is not restored, send back to ExtractCraft for repairs.

CLEAN THE SOURCE

The removable parts, including the glass lid, upper seal, reservoir cup, glass collector, and lower seal, should be hand washed with a mild soap and water.

The base where the electronics are housed can not be put into water at any time. To clean the base, gently wipe with a damp towel.

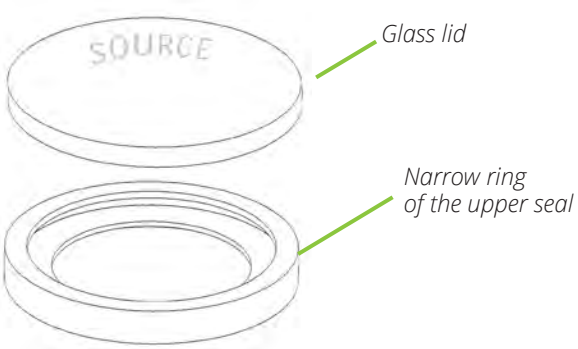

MOBILE APP

The mobile app works on Android or iOS mobile devices. It operates with the Source via Bluetooth and allows you to monitor time, temperature, vacuum, and confirm the altitude setting, as well as start and stop the unit.

INSTALLING THE MOBILE APP

Download the mobile app from your app store.

For the Google Play store, tap the search bar and enter **Extractcraft**.

Tap **The Source by Extractcraft app**, then tap **INSTALL**. Tap **ACCEPT** to allow the app to use Bluetooth.

For iOS, use search to find **The Source by Extractcraft app**, then tap the Source app, and under the app image, tap **GET**.

Once you have the app installed, you should see the Source app icon on your device.

CONFIRM BLUETOOTH ON

Use **Settings** to verify that you have Bluetooth ON.

LAUNCH THE SOURCE APP

Once the Source app is downloaded tap the icon to launch the app.

A green icon indicates when communication has been established with the Source.

A red icon indicates no Bluetooth connection. If this happens, confirm your mobile device Bluetooth is ON and make sure the Source has power and the green light is illuminated.

A blinking red/green icon means the Bluetooth connection is weak and the app is having trouble maintaining connectivity

Be sure the Source is plugged in and receiving power before attempting to connect and pair the mobile app

1

The opening screen may open without an available device visible. Tap the red phone icon at the top right of the screen to activate the 'SELECT APPLIANCE' screen

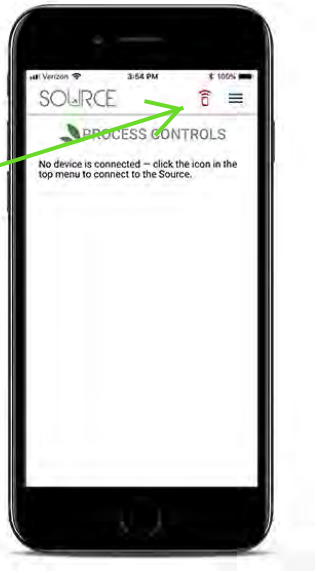

2

The Select Appliance screen will come up and display the devices available to choose from. Tap on the device you would like to monitor.

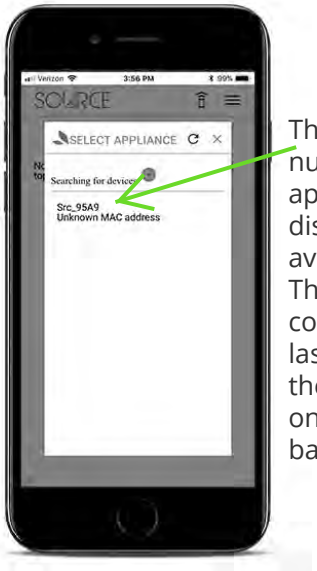

The 'Src_####' number that appears on the display identifies available units. The four digits correspond to the last four digits of the unit's s/n found on the back of the base.

3

If the device you would like to monitor is not appearing as an available option touch the green, circular refresh icon at the top right and all available devices will appear. Touch the device you wish to monitor.

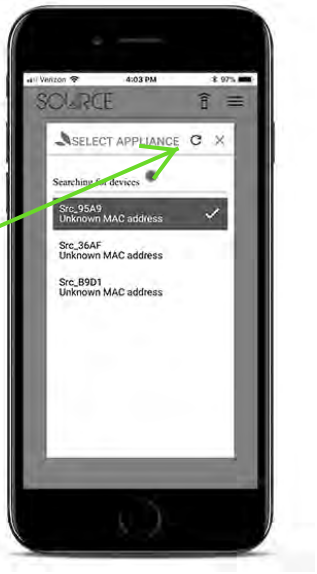

4

From the Process Controls screen you can start the Source in normal mode, monitor the progress of the extraction, and stop the process.

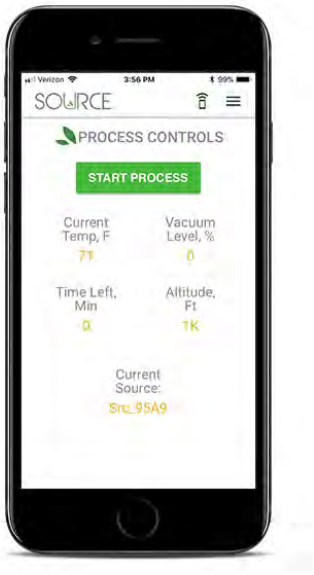

START/STOP PROCESS BUTTON

Select this button to start or stop the process. The green illuminated button on the base of the unit will flash to confirm the app's command.

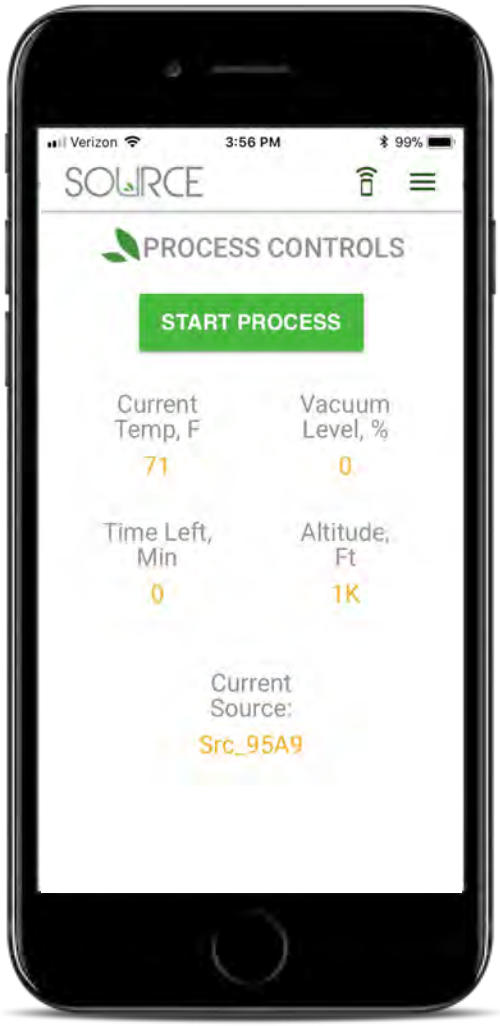

INTERPRETING THE DISPLAY VALUES

Process control readouts for the Source are available from the Control screen:

Current Temp, F: Displays the heat being pumped into the unit at any given time. When the heater is at rest it may display a low value, and when it is active it may display a higher value. Those heat input temps change to keep the alcohol in the cup at a constant 100°F-105°F.

Vacuum level %: Indicates the current vacuum as a percentage of total achievable vacuum. The internal controls will determine when it's necessary for the pumps to engage and reestablish 100%.

Time Left, Min: Shows the time remaining for the current cycle. This can be reset to the max 120 min by turning the machine off and on.

Altitude, Ft: Reflects the default altitude that has been programmed into the unit. If the displayed value is not the closest 1,000 feet of elevation for where you are located, follow the Altitude Tuning directions on page 13 to set accordingly.

Current Source: This area lists the ExtractCraft Source unit that is connected and being monitored. The four digits displayed coincide with the last four digits of the s/n of the unit found on the backside of the unit.

ALTITUDE TUNING

In order for your Source to perform at its full potential it's very important to program the elevation where it will be used to the closest 1,000 feet of elevation. Once you program an elevation it will remain as the default until it's manually changed to a different elevation.

DETERMINING ELEVATION

Option 1- Ask Siri "What's my current elevation?"

Option 2- Visit www.whatismyelevation.com and enter your current location.

STEPS TO PROGRAM ELEVATION

1) Plug in the Source and wait for the green lighted button to illuminate.

2) Push and hold the button for a full 10-seconds and release.

3) Observe the lighted button flash quickly 10-times.

4) Push the button once for every 1,000 feet of elevation up to 8,000 feet:

Sea Level.....no pushing (just wait for 10-seconds)

1,000-feet.....1-time

2,000-feet.....2-times

3,000-feet.....3-times

4,000-feet.....4-times

5,000-feet.....5-times

6,000-feet.....6-times

7,000-feet.....7-times

8,000-feet.....8-times

5) After entering your elevation the Source will pause for 10-seconds and the green lighted button will flash the same number of times it was pushed, once for every 1,000 feet.

6) If the Source repeats back the correct number of flashes you're finished and ready to start your extract crafting. If it's incorrect repeat steps 1-6 again. The elevation setting is stored permanently until the elevation is reprogrammed.

BOTANICAL RECIPES

ROSE EXTRACT

Ingredients: 100 grams dried rose petals, 12 oz. food-grade, grain alcohol of 190-proof (95%) alcohol

Tincture directions: Fill mason jar with rose petals. Fill alcohol to 1” above the level of the petals. Allow rose petal tincture to soak for 36 hours.

Strain tincture into Source reservoir cup. Follow typical extraction process.

LAVENDER EXTRACT

Ingredients: 20 grams of lavender, 12 oz. food-grade, grain alcohol of 190-proof (95%) alcohol

Tincture directions: Fill jar with cleaned lavender, hand break or crush the leaves, do not grind. Cover to 1/4” past the plant volume with alcohol. Allow tincture to soak for 30 minutes.

Strain tincture into Source reservoir cup. Follow typical extraction process.

PEACH HABANERO OIL MARGARITA ADDITIVE

Ingredients: 3 ripe peaches (pitted), 2 habanero peppers (remove stems), 7 oz. of freezer chilled food-grade, grain alcohol of 190-proof (95%) alcohol

Tincture directions: Blend all ingredients for 5 seconds in blender. Allow the mixture to soak 30 minutes.

Strain tincture into Source reservoir cup. Follow typical extraction process.

For this volume, the processing will take 240 minutes. Restart the Source after it automatically stops after 120 minutes. Check the consistency and taste, and continue to your desired result for the peach habanero extract.

Add full solution directly to a full bottle of tequila or add 1–5 drops per drink.

LAVENDER, CAYENNE, LEMON TOPICAL RUB

Ingredients: 28 grams lavender, 2 dried cayenne peppers, 1/4 cup dried lemon peel, 5-7 oz. chilled food-grade, grain alcohol of 190-proof (95%) from freezer.

Tincture directions: Use an 8 oz. mason jar in which to combine all ingredients. Allow soak time of 30 minutes.

Strain tincture into Source reservoir cup. Follow typical extraction process. Processing should take 90 minutes. Stop the processing. Pour in bottle and allow the extract to settle before use.

Use oil directly on sore muscles or mix with coconut oil for topical cream.

Optionally you can prepare separate oils of lavender, cayenne (be careful!), and lemon. Warm up coconut oil to soft but not melted consistency, mix in lavender, cayenne, lemon oil and allow it to cool.

SOAK TIMES FOR TINCTURES

The following are some general times for soaking your tinctures that may help your results.

3–5 MINUTES			
Hops	Basil	Ground Coffee	Mint
Thyme	Oregano	Ground Vanilla	
30 MINUTES			
Cayenne	Jalapeno	Habanero	
Resins	Lobelia	Citronella	
Aloe Vera	Clove	Rosemary	
Lavender	Eucalyptus	Star Anise	
12 HOURS			
Propolis	Avocado	Nuts	
Dried Fruit	Marcuja		
24–96 HOURS			
Rose Petal	Oak	Dried Citrus Peel	Pine
Dried Beans	Cedar	Whole Roots	

TROUBLESHOOTING

Problem	Possible cause	Solution
Vacuum pump runs continually	Outer collector is not sealing.	Check the lower seal and collector are securely in place and clear of any debris. Try pressing down on the lid gently while the vacuum pump is running. Confirm the pressure relief screw is turned fully to the right and has not been crossthreaded. Use the mobile app to view the vacuum level. When the pump is running, the vacuum level should be steadily rising and will turn off when it reaches 100%. If the problem persists inspect the glass cylinder composing the collector for chips and damage. If the glass is obstructed or damaged a vacuum seal is not possible.
Comm icon in mobile app is red	Bluetooth not on/ Source not pairing	Check your mobile device settings and make sure you have Bluetooth ON. Plug in the Source and make sure the green light on the base is ON before launching the Source app.
The Source process turned off but the extraction is not finished	Automatic shut down due to time allowance	The Source process runs for a maximum of 120 minutes, then automatically shuts off. To run a longer extraction, simply restart it by pressing the green button or by using START PROCESS from the mobile app.
	Power outage or circut breaker	To restart, unplug the Source and allow it to cool. Once it is cool, plug it back in and restart the process.
Green light does not illuminate	The power cord is not plugged in/outlet not getting power	Check that the power cord is firmly plugged into the outlet. Check your breaker or switches that control your outlet. Test another appliance in that outlet to verify it is working.
Green light continuous flashing	Safety shut off	Contact customer service at info@extractcraft.com or call (720) 307-8628
Cannot tell if the process is running	Green button is lit, but the Source is quiet.	Once the Source has been started, if you are unsure whether the process is stopped or running, you can check two ways: observing the green illuminated button which will blink once every 10-15 seconds when in operation; or by using the app to view the status.

TECHNICAL SPECIFICATIONS

Performance: Processes 1/2- 2 oz of dry material

Power: 110-120 VAC 60 Hz, 2.1 A

Connectivity: Bluetooth BLE

Dimensions: The Source stands 10-inches tall. The base is 7-inches long by 7-inches wide.

Safety Feature: 120 minute maximum run time per start

WARRANTY

Extractcraft shall repair or replace the Source, in its sole discretion, for any manufacturing defect for a period of 12 months from shipment of the device when purchased from ExtractCraft or an authorized dealer defined in the “AUTHORIZED SELLER” section below.

We strongly urge caution when purchasing from Amazon and Ebay. Amazon and Ebay online purchases from sellers not included in the "AUTHORIZED SELLERS" list below will not be covered by the ExtractCraft warranty and will not be eligible to be serviced by ExtractCraft. ExtractCraft reserves the right to update and amend the Authorized Sellers list without notice. The ExtractCraft warranty does not cover purchases outside of our authorized dealers and units will not be eligible for servicing by ExtractCraft.

AUTHORIZED SELLERS: All brick and mortar store sellers. All independent website online sellers. ExtractCraft on Amazon. Focus Camera on Amazon. ALL other Amazon and Ebay sellers are UNAUTHORIZED and will not be covered by warranty or serviced by ExtractCraft.

GLOSSARY

absolutes aromatic concentrated oily mixtures extracted from plants requiring the use of solvent extraction techniques

concrete a more concentrated form than absolutes, resulting in a wax-like substance

flash point temperature at which a compound gives off sufficient vapor to ignite in air

tincture a solution of plant matter in alcohol

City of Nevada City

TO: Planning Commission

FROM: Amy Wolfson, City Planner

MEETING DATE: April 19, 2019

RE: Thrive Society, LLC - Medical Cannabis Manufacturing and Distribution Business

ATTACHMENTS:
1. Redacted Application
2. Recommended Conditions of Approval
3. Memorandum on Nevada City Medical Cannabis Business Regulations
4. Zoning Verification Letter

APPLICATION REVIEW: The subject application was submitted on February 12, 2018. Notification and an invitation to review and comment was sent to the Fire Chief, the Police Chief, our consulting attorney, the City Engineer, the City Manager, the Environmental Health Department, the Building Department, and to the Planning Commissioners. Redacted versions of the application are attached to the staff report. After the initial agency review, the applicant responded to staff requests for clarification, which has been included in the attached application. Agency comments have been provided to the planning commission and if applicable have been incorporated into the conditions of approval.

PROJECT PROPOSAL: Thrive Society, LLC is managed by Basil McMahon, Danielle Dao, and Ella Alpina. Their operation involves a mechanical extraction process, involving pressure, heat, and/or agitation machinery to remove cannabinoid oil from raw product to produce concentrates as a finished product, and also produce edible and topical products infused with concentrates. They are also proposing to occasionally partner with other permitted medical cannabis manufacturers to provide co-packing services. The applicant is proposing to distribute their own licensed product, as well as third-party licensed products and they are requesting that the commission consider a request to expand the hours of their operation to 7AM to 7PM, seven days a week. The request for expanded hours is primarily to accommodate the distribution component of their business. They plan to use a maximum of two primary distribution vehicle and one secondary vehicle, all of which will also be used as commuting vehicles by personnel and will not require additional parking accommodation beyond staff parking needs. The building manager has allocated 14 parking spaces, which is fewer than staff's calculated ratio of facility spaces per square foot of lease area and will be reiterated in the conditions of approval. The applicant has provided documentation that this number of spaces will accommodate their business operations.

All finished products will include labels that are compliant with State medical cannabis labeling standards. A background check has been conducted on Dao, and Alpina and no disqualifying information was reported pursuant to Section 9.22.090 (M) of the City Municipal Code. McMahon is expected to provide staff with additional requested information prior to the planning commission meeting, at which time staff will provide the commission a determination on his qualifying status.

The facility will be video surveilled in accordance with their application and Section 9.22.090 of the City Municipal Code. The Police Department has provided recommendations to the applicant, including an inspection of the facility prior to tenant improvements.. The Police Chief or designee will conduct an inspection of the facility prior to the city's issuance of a medical cannabis business permit.

LOCATION: The local ordinance allows medical cannabis manufacturing, distribution, testing laboratory, and cultivation businesses only in the Light Industrial (LI) zoning district. The proposed manufacturing and distribution business is proposed at 138 New Mohawk Road on the second floor of the building, encompassing several suites on the east side, totaling 4,900 square feet. Several other tenants, many of which are prospective medical cannabis business applicants, also occupy the building. Caltrans occupies the lower floor for office use. Other nearby businesses uses include manufacturing and assembly, a campground, the railroad museum, a home study program, and general office use. A Zoning Verification letter has been issued for this business at the proposed location, verifying that the site meets local zoning and locational requirements of the Nevada City Ordinance Section 17.142 of the City Municipal Code.

RECOMMENDED MOTIONS:

1) Make a Motion to find the project exempt pursuant to CEQA Guidelines Section 15301 (existing facilities) because the building is already existing and the proposed manufacturing and self-distribution use is consistent with the principal permitted uses allowed in the Light Industrial Zoning District pursuant to Section 17.48.020, and there is no expansion of use beyond what is already considered a permitted use.

2) Make a Motion to approve the application as presented to authorize a medical cannabis business permit to Thrive Society, LLC for a manufacturing (cold-water extraction, infusion) and distribution operation at 138 New Mohawk , subject to the recommended Conditions of Approval, attached, as may be modified by the planning commission, making the following findings

   a) As presented and conditioned, there is no reasonable argument that approval of the application is likely to be detrimental to the city, taking into account any health, safety, and welfare impacts on the community.

   b) Finding that the application is consistent with Chapter 9.22 of the Nevada City Municipal Code.

   OR

   Make a Motion to reject the application for a medical cannabis business permit to Thrive Society, LLC finding that the application is not consistent with Chapter 9.22 of the Nevada City Municipal Code.

   OR

   Make a Motion to continue the decision for authorization of a medical cannabis business permit to Thrive Society, LLC with direction to the applicant regarding any inadequacies of their application that must be addressed.

RECOMMEDED AMENDED CONDITIONS OF APPROVAL
Thrive Society, LLC, 138 New Mohawk (second level, east side)

A. PLANNING DEPARTMENT

1. Provide proof of California State Licensing that verifies the license type(s) issued.

2. Prior to commencing operations, you are required to complete all tenant improvements as detailed in your application. A medical cannabis business shall be subject to a mandatory building inspection, and must obtain all required permits and approvals which would otherwise be required for any business of the same size and intensity operating in that zone. This includes but is not limited to obtaining any required building permit(s), fire department approvals, Environmental Health Department approvals and other zoning and land use permit(s) and approvals.

3. Provide evidence of the right to occupy and to use the property for purposes of a medical cannabis manufacturing business. As a condition precedent to the City's issuance of a medical cannabis business permit pursuant to this Chapter, any person intending to open and to operate a medical cannabis business shall provide sufficient evidence of the legal right to occupy and to use the proposed location.

4. Execute an agreement, in a form approved by the city attorney, agreeing to indemnify, defend (at applicant's sole cost and expense), and hold the City of Nevada City, and its officers, officials, employees, representatives, and agents, harmless, from any and all claims, losses, damages, injuries, liabilities or losses which arise out of, or which are in any way related to, the City's issuance of the medical cannabis business permit, the City's decision to approve the operation of the medical cannabis business or activity, to process used by the City in making its decision, or the alleged violation of any federal, state or local laws by the medical cannabis business or any of its officers, employees or agents.

5. Provide proof of liability insurance and liability agreement. You are required to maintain insurance at coverage limits, and with conditions thereon determined necessary and appropriate from time to time by the city attorney.

6. Operation of your business shall be consistent with the submitted application material or as otherwise presented at the public meeting and as approved by the planning commission.

7. Your business is allotted no more than 14 parking spaces per your agreement with the building manager and based on the stated needs to accommodate your manufacturing and distribution business. Parking allotment is intended to accommodate all employees, distribution vehicles, vendors, and visitors of the subject business.

8. Cannabis Manufacturing: Edibles and Other Cannabis Products; Sale or Distribution of Edible and Other Cannabis Products. The manufacturing of food or other products infused with or which otherwise contain cannabis may be manufactured within the appropriate manufacturing zoning districts Section 17.142 of the Nevada City Municipal Code, subject to the regulations set forth in this Chapter, and subject to whatever additional regulations may be promulgated hereunder by an ordinance or resolution of the City Council

To Agenda

9. Packaging and Labeling:

    a. Before a medical cannabis manufacturer delivers any edible cannabis or edible cannabis product to a dispensary, the same shall be labeled and placed in tamper-evident packaging which at least meets the requirements of California Business and Professions Code section 19347, as the same may be amended from time-to-time or superseded or replaced by subsequent State legislation or by any department or division of the State of California

    b. All items to be sold or distributed shall be individually wrapped at the original point of preparation by the business permitted as a medical cannabis manufacturer

    c. Labeling must include a warning if nuts or other known allergens are used, and must include the total weight (in ounces or grams) of cannabis in the package

    d. A warning that the item is a medication and not a food must be clearly legible on the front of the package

    e. The package must have a label warning that the product is to be kept away from children

    f. The label must also state that the product contains cannabis and must specify the date of manufacture

    g. Any edible cannabis product that is made to resemble a typical food product must be in a properly labeled opaque (non-see-through) package before it leaves the medical marijuana manufacturing business

    h. Deliveries must be in a properly labeled opaque package when delivered

    i. The City Council may impose additional packaging and labeling requirements on cannabis or cannabis products by resolution, as permitted by law

B. <u>ENGINEERING DEPARTMENT</u>

1 Unless authorized by separate waste discharge requirements, the Cannabis General Order, or a CWA section 404 permit, the following discharges are prohibited:

- Any waste that could affect the quality of the waters of the state.

- Any wastewater discharge to City sewer that contains excessive nutrients (e.g., phosphate or nitrate), salinity constituents (e.g., sodium, chloride, potassium, calcium, sulfate, magnesium), constituents (e.g., iron, manganese, zinc, molybdenum, boron, and silver) or chemicals

C. <u>FIRE DEPARTMENT</u>

1. The occupancy classification shall be determined as a Group F (Factory Industrial). Group F occupancies include those intended for the purpose of assembling, disassembling, fabricating, finishing, manufacturing, packaging, repair or processing operations that not classified as Group H or S.

2. Note that NFPA 1 is not recognized by the California Building or Fire Codes. However, it is recommended that NFPA 1 Chapter 38, Marijuana Growing, Processing or Extraction Facilities, be used to determine fire protection requirements not covered in the California Fire Code (CFC).

3. Fire extinguishers with a minimum rating of 2-A: 10-B: C shall be provided such that no point in the building is further than 75-foot travel distance to an extinguisher.

4. A Class K fire extinguisher shall be provided within 30 feet of the commercial cooking equipment.

5. The existing fire sprinkler system shall be reviewed by a fire protection contractor or specialist for proper coverage. Sprinklers in the production, storage, shipping and receiving areas shall be spaced for Ordinary Hazard Occupancy per NFPA 13; 130 square feet per sprinkler maximum. The existing usage of the space is offices which are considered Light Hazard Occupancy (225 square feet per sprinkler maximum). Hydraulic calculations may be required. Fire sprinkler plans shall be submitted to the Fire Department by a licensed C-16.

6. Plans and specifications for the Fike's FAAST early warning fire detection system, mentioned on page 106 of the proposal, shall be submitted to the Fire Department for review.

7. Plans and specifications for the kitchen hood fire system, described on page 34 of the proposal, shall be submitted to the Fire Department for review.

8. Air-moving systems supplying air in excess of 2000 cubic feet per minute to enclosed spaces within the building shall be equipped with an automatic shut.

9. There appears to be no volatile extraction processes taking place with in this facility. If any volatile extraction operations are to take place, details shall be submitted for review and approval prior to conducting any extraction processes.

10. Keys shall be provided to access all spaces to be placed into the facility Knox box.

D. <u>COUNTY ENVIRONMENTAL HEALTH DEPARTMENT</u>

1. The Nevada County Environmental Health Department does not have any opposition to the proposed applications. All hazardous materials stored, utilized and wastes generated as a result of the manufacturing operations will require permitting through the Environmental Health Department CUPA program per California Health and Safety Code. Retail sales of edible food product requirements will be determined upon the approval of the County of Nevada Cannabis Ordinance.

2. The manufacturing operation must adhere to existing California Department of Public Health - Manufactured Cannabis Safety Branch (MCSB) regulations governing the manufacture of cannabis-infused edibles for both medical and nonmedical use. The regulations released on November 16, 2017.

3. Any retail medical cannabis operation, in conjunction with the manufacturing operation, must be licensed with the Bureau of Cannabis Control.

4. The applicant andlor facility operator must adhere to all applicable codes and regulations regarding the storage of hazardous materials and the generation of hazardous wastes set forth in California Health and Safety Code Section 25500-25519 and 25100- 25258.2 including the electronic reporting requirement to the California Environmental Reporting System (CERS).

5. The applicant and/or facility operator must apply for and obtain a permit for the storage of hazardous materials and the generation of hazardous wastes from the Nevada County Department of Environmental Health (NCDEH), Certified Unified Program Agency (CUPA).

6. The applicant and/or facility operator shall secure and annually renew the permit for this facility within 30 days of becoming subject to applicable regulations. Routine compliance inspections, conducted by NCDEH inspectors, will occur at the facility and compliance inspections are typically unannounced inspections during regular business hours: Monday -Friday, 8:00am - 5:00pm.

7. The County of Nevada Cannabis Ordinance, once codified, may require additional permitting, registration and reporting to the Environmental Health Department.

E. POLICE DEPARTMENT

1 Prior to tenant improvements, the Police Chief or designee shall conducted a walk-through of the facility and make security recommendations. The final security plan shall be prepared and submitted to the Police Chief for review and approval.

2 The applicant shall provide a copy of the contract with their security company and shall clarify whether there will be one or two security guards on site.

3 The police Chief shall inspect the facility prior to issuance of a local medical cannabis business permit.

AMENDMENT 2

Lyle 'Basil' McMahon
Soon-to-be R&R Goods, Inc.
(Formerly Thrive Society)
138 New Mohawk Rd. #270
Nevada City, CA 95959
basil@rnrgoods.com
541-602-8812

To:
Amy Wolfson
Nevada City Planning Department
Amy.wolfson@nevadacityca.gov

October 7, 2019

Notification- Change of Owners, Change of Business Name

Dear Mrs. Wolfson,

I am writing to provide your Department notice of a change in ownership, contact information, and the name of our business entity.

Our company has recently reached an amicable settlement agreement with one of our owners. As a part of the terms of the settlement, we have agreed to carry out certain changes in ownership, management, and the use of Company brand IP which I wanted to notify you of.

I shall be providing a similar letter of notice to the Department of Public Health- Manufactured Cannabis Safety Branch, as well as the Bureau of Cannabis Control.

The changes are as follows:

1. Change in Ownership

- As a part of the settlement agreement, Ms. Danielle Dao will be discontinuing all involvement in our Company. From this point going forwards, she is no longer a Director, officer, or involved in management.
- In keeping with the terms of the settlement agreed to by our Company, Ms. Dao has resigned from the Board of Directors, and the shareholders have voted to elect the following individuals as Directors going forward:
    - Lyle 'Basil' McMahon (continuing on)
    - Hezekiah D. Allen (becoming a new Director and Owner)
        - DOB 7/26/1983, CA DL #D1835623
    - Graham Burke (becoming a new Director and Owner)
        - DOB 3/23/78, CA DL# D5330485

We expect that Mr. Allen and Mr. Burke will need to submit Live Scans and perform other such tasks as required of Owners when being added to our permit, so do please advise as to what steps they should take.

Separate and apart from the Settlement Agreement between our Company and Ms. Dao, Ella Alpina is no longer a director, officer, or involved in management of our Company, and as such, in our estimation, should also no longer be considered an owner on our permit, either.

To Agenda

2. **Change in Contact Information**

In keeping with the change of business name outlined in #4 and #5 below, we have agreed to discontinue use of any web domains making use of the phrase "Thrive Society". As such, we would like to update our contact information on file to:

Primary owner contact:
Lyle 'Basil' McMahon
basil@rnrgoods.com
541-602-8812

Business contact:
frontdesk@rnrgoods.com
415-484-2646

3. **Change in Name or Legal Business Name**

As a part of the settlement, our Company has agreed to transfer to Ms. Dao the exclusive use and ownership of the trade name "Thrive Society" and all associated brand IP. Further to this point, we have agreed to change the legal business name of our Company such that it no longer includes the words or phrase "Thrive Society".

Accordingly, we have filed a name change request with the California Secretary of State, to change the legal business name of our Company to "R&R Goods, Inc." We have not yet received confirmation that this name change request has been processed, although we anticipate hearing back from them within 7-10 days.

4. **Change in DBA/FBN**

As a part of the settlement, our Company has agreed to transfer to Ms. Dao the exclusive use and ownership of the trade name "Thrive Society" and all associated brand IP. Further to this point, we have agreed to surrender the Fictitious Business Name "Thrive Society" that was registered with the County of Nevada Clerk-Recorder's Office.

We have filed for two new DBA/ FBNs to operate under:
Rough & Ready Holdings
Rough & Ready Goods

For the purposes of referring to our business, "Rough & Ready Goods" will be our preferred trade name.

If any of these changes should require us to return to the planning commission for an amendment to our cannabis business permit, we would be happy to do so. Do please let me know if you have any questions or require any further information. Thank you!

Best Regards,

Lyle 'Basil' McMahon
Soon-to-be R&R Goods, Inc.
(Formerly Thrive Society)

To Agenda

RECOMMEDED AMENDED CONDITIONS OF APPROVAL
R&R Goods, Inc., 138 New Mohawk (second level, east side)

A. PLANNING DEPARTMENT

1. Provide proof of California State Licensing that verifies the license type(s) issued.

2. Prior to commencing operations, you are required to complete all tenant improvements as detailed in your application. A medical cannabis business shall be subject to a mandatory building inspection, and must obtain all required permits and approvals which would otherwise be required for any business of the same size and intensity operating in that zone. This includes but is not limited to obtaining any required building permit(s), fire department approvals, Environmental Health Department approvals and other zoning and land use permit(s) and approvals.

3. Provide evidence of the right to occupy and to use the property for purposes of a medical cannabis manufacturing business. As a condition precedent to the City's issuance of a medical cannabis business permit pursuant to this Chapter, any person intending to open and to operate a medical cannabis business shall provide sufficient evidence of the legal right to occupy and to use the proposed location.

4. Execute an agreement, in a form approved by the city attorney, agreeing to indemnify, defend (at applicant's sole cost and expense), and hold the City of Nevada City, and its officers, officials, employees, representatives, and agents, harmless, from any and all claims, losses, damages, injuries, liabilities or losses which arise out of, or which are in any way related to, the City's issuance of the medical cannabis business permit, the City's decision to approve the operation of the medical cannabis business or activity, to process used by the City in making its decision, or the alleged violation of any federal, state or local laws by the medical cannabis business or any of its officers, employees or agents.

5. Provide proof of liability insurance and liability agreement. You are required to maintain insurance at coverage limits, and with conditions thereon determined necessary and appropriate from time to time by the city attorney.

6. Operation of your business shall be consistent with the submitted application material or as otherwise presented at the public meeting and as approved by the planning commission.

7. Your business is allotted no more than 14 parking spaces per your agreement with the building manager and based on the stated needs to accommodate your manufacturing and distribution business. Parking allotment is intended to accommodate all employees, distribution vehicles, vendors, and visitors of the subject business.

8. Cannabis Manufacturing: Edibles and Other Cannabis Products; Sale or Distribution of Edible and Other Cannabis Products. The manufacturing of food or other products infused with or which otherwise contain cannabis may be manufactured within the appropriate manufacturing zoning districts Section 17.142 of the Nevada City Municipal Code, subject to the regulations set forth in this Chapter, and subject to whatever additional regulations may be promulgated hereunder by an ordinance or resolution of the City Council

To Agenda

9. Packaging and Labeling:

    a. Before a medical cannabis manufacturer delivers any edible cannabis or edible cannabis product to a dispensary, the same shall be labeled and placed in tamper-evident packaging which at least meets the requirements of California Business and Professions Code section 19347, as the same may be amended from time-to-time or superseded or replaced by subsequent State legislation or by any department or division of the State of California

    b. All items to be sold or distributed shall be individually wrapped at the original point of preparation by the business permitted as a medical cannabis manufacturer

    c. Labeling must include a warning if nuts or other known allergens are used, and must include the total weight (in ounces or grams) of cannabis in the package

    d. A warning that the item is a medication and not a food must be clearly legible on the front of the package

    e. The package must have a label warning that the product is to be kept away from children

    f. The label must also state that the product contains cannabis and must specify the date of manufacture

    g. Any edible cannabis product that is made to resemble a typical food product must be in a properly labeled opaque (non-see-through) package before it leaves the medical marijuana manufacturing business

    h. Deliveries must be in a properly labeled opaque package when delivered

    i. The City Council may impose additional packaging and labeling requirements on cannabis or cannabis products by resolution, as permitted by law

B. <u>ENGINEERING DEPARTMENT</u>

1 Unless authorized by separate waste discharge requirements, the Cannabis General Order, or a CWA section 404 permit, the following discharges are prohibited:

- Any waste that could affect the quality of the waters of the state.

- Any wastewater discharge to City sewer that contains excessive nutrients (e.g., phosphate or nitrate), salinity constituents (e.g., sodium, chloride, potassium, calcium, sulfate, magnesium), constituents (e.g., iron, manganese, zinc, molybdenum, boron, and silver) or chemicals

C. <u>FIRE DEPARTMENT</u>

1. The occupancy classification shall be determined as a Group F (Factory Industrial). Group F occupancies include those intended for the purpose of assembling, disassembling, fabricating, finishing, manufacturing, packaging, repair or processing operations that not classified as Group H or S.

To Agenda

2. Note that NFPA 1 is not recognized by the California Building or Fire Codes. However, it is recommended that NFPA 1 Chapter 38, Marijuana Growing, Processing or Extraction Facilities, be used to determine fire protection requirements not covered in the California Fire Code (CFC).

3. Fire extinguishers with a minimum rating of 2-A: 10-B: C shall be provided such that no point in the building is further than 75-foot travel distance to an extinguisher.

4. A Class K fire extinguisher shall be provided within 30 feet of the commercial cooking equipment.

5. The existing fire sprinkler system shall be reviewed by a fire protection contractor or specialist for proper coverage. Sprinklers in the production, storage, shipping and receiving areas shall be spaced for Ordinary Hazard Occupancy per NFPA 13; 130 square feet per sprinkler maximum. The existing usage of the space is offices which are considered Light Hazard Occupancy (225 square feet per sprinkler maximum). Hydraulic calculations may be required. Fire sprinkler plans shall be submitted to the Fire Department by a licensed C-16.

6. Plans and specifications for the Fike's FAAST early warning fire detection system, mentioned on page 106 of the proposal, shall be submitted to the Fire Department for review.

7. Plans and specifications for the kitchen hood fire system, described on page 34 of the proposal, shall be submitted to the Fire Department for review.

8. Air-moving systems supplying air in excess of 2000 cubic feet per minute to enclosed spaces within the building shall be equipped with an automatic shut.

9. There appears to be no volatile extraction processes taking place with in this facility. If any volatile extraction operations are to take place, details shall be submitted for review and approval prior to conducting any extraction processes.

10. Keys shall be provided to access all spaces to be placed into the facility Knox box.

D. <u>COUNTY ENVIRONMENTAL HEALTH DEPARTMENT</u>

1. The Nevada County Environmental Health Department does not have any opposition to the proposed applications. All hazardous materials stored, utilized and wastes generated as a result of the manufacturing operations will require permitting through the Environmental Health Department CUPA program per California Health and Safety Code. Retail sales of edible food product requirements will be determined upon the approval of the County of Nevada Cannabis Ordinance.

2. The manufacturing operation must adhere to existing California Department of Public Health - Manufactured Cannabis Safety Branch (MCSB) regulations governing the manufacture of cannabis-infused edibles for both medical and nonmedical use. The regulations released on November 16, 2017.

3. Any retail medical cannabis operation, in conjunction with the manufacturing operation, must be licensed with the Bureau of Cannabis Control.

To Agenda

4. The applicant andlor facility operator must adhere to all applicable codes and regulations regarding the storage of hazardous materials and the generation of hazardous wastes set forth in California Health and Safety Code Section 25500-25519 and 25100- 25258.2 including the electronic reporting requirement to the California Environmental Reporting System (CERS).

5. The applicant and/or facility operator must apply for and obtain a permit for the storage of hazardous materials and the generation of hazardous wastes from the Nevada County Department of Environmental Health (NCDEH), Certified Unified Program Agency (CUPA).

6. The applicant and/or facility operator shall secure and annually renew the permit for this facility within 30 days of becoming subject to applicable regulations. Routine compliance inspections, conducted by NCDEH inspectors, will occur at the facility and compliance inspections are typically unannounced inspections during regular business hours: Monday -Friday, 8:00am - 5:00pm.

7. The County of Nevada Cannabis Ordinance, once codified, may require additional permitting, registration and reporting to the Environmental Health Department.

E. POLICE DEPARTMENT

1 Prior to tenant improvements, the Police Chief or designee shall conducted a walk-through of the facility and make security recommendations. The final security plan shall be prepared and submitted to the Police Chief for review and approval.

2 The applicant shall provide a copy of the contract with their security company and shall clarify whether there will be one or two security guards on site.

3 The police Chief shall inspect the facility prior to issuance of a local medical cannabis business permit.

To Agenda